INSTALLATION INSTRUCTIONS

COMMERCIAL ROOM VENTILATORS WITH EXHAUST

MODEL
CHCRV-5

For Use with Bard CH Series 3, 4, & 5 Ton Wall Mount Heat Pumps

Bard Manufacturing Company, Inc.
Bryan, Ohio 43506

Since 1914...Moving ahead just as planned.

Manual : 2100-450D
Supersedes: 2100-450C
File: Volume III Tab 19
Date: 05-04-07

© Copyright 2004

CONTENTS

General
General Information 3
Unpacking 3
Description 3

Installation
Basic Installation ..... 4, 5, & 6
CO_2 Control 6
Blade Adjustment for Desired Ventilation Air 8
Commercial Room Ventilator –
CH Series ..... 10 & 11

Figures
Figure 1 Removal of Exterior Panels, Air Filter and Exhaust Cover Plate 4
Figure 2 Install Ventilator 5
Figure 3 Lead Connections 7
Figure 4 Call for Blower Operation 10
Figure 5 Call for Cooling Operation 11

Graphs
Graph 1 CH3S1 Vent Airflow 8
Graph 2 CH4S1 Vent Airflow 9
Graph 3 CH5S1 Vent Airflow 9

Manufactured under U.S. patent number 5,301,744
Other patents pending

COPYRIGHT DECEMBER 2004
BARD MANUFACTURING COMPANY, INC.
BRYAN, OHIO USA 43506

GENERAL INFORMATION

The ventilator should only be installed by a trained heating and air conditioning technician. These instructions serve as a guide to the technician installing the ventilator package. They are not intended as a step by step procedure with which the mechanically inclined owner can install the package.

The ventilator housing is shipped in one carton which contains the electrical harness, miscellaneous hardware and installation instructions.

UNPACKING

Upon receipt of the equipment be sure to compare the model number found on the shipping label with the accessory identification information on the ordering and shipping document to verify that the correct accessory has been shipped.

Inspect the carton housing of each ventilator as it is received, and before signing the freight bill, verify that all items have been received and that there is no visible damage. Note any shortages or damage on all copies of the freight bill. The receiving party must contact the last carrier immediately, preferably in writing, requesting inspection by the carrier's agent. Concealed damage not discovered until after loading must be reported to the carrier within 15 days of its receipt.

DESCRIPTION

The CHCRV-5 ventilator is designed to be used with Bard CH Series 3½ through 5 ton wall mount series air conditioners and heat pumps. They are electromechanical vent systems designed to provide fresh air to meet indoor air quality standards.

MODELS:

When installed in the above-listed models, the CRV provides built in exhaust provisions. When the damper blade opens to bring fresh air in, the damper also opens an exhaust relief. The exhaust air will flow into the condenser section of the unit. The condenser fan will help draw exhaust air out.

INSTALLATION

BASIC INSTALLATION

1. Unpack the ventilator assembly which includes the integral ventilator with attached electrical harness and miscellaneous hardware.

⚠ WARNING

Open and lock unit disconnect switch before installing this accessory to prevent injury or death due to electrical shock or contact with moving parts. Turn thermostat to off.

MODEL	FOR USE WITH FOLLOWING UNITS		
CHCRV-5	CH3S1	CH4S1	CH5S1

2. Remove and save the existing exterior blower access, filter access and service access panels on the Bard wall mount unit. (See Figure 1.)
3. Remove and save existing unit air filter and screws from front center grille. (See Figure 1.)
4. Remove and discard CRV exhaust cover plate.
5. Install ventilator by inserting the ventilator into the unit to the far left side clearing the right filter bracket. Once the ventilator is fully inserted, slide the ventilator to the right until it is tight against the back of the control panel. (See Figure 2.)

FIGURE 1
REMOVAL OF EXTERIOR PANELS, AIR FILTER AND EXHAUST COVER PLATE

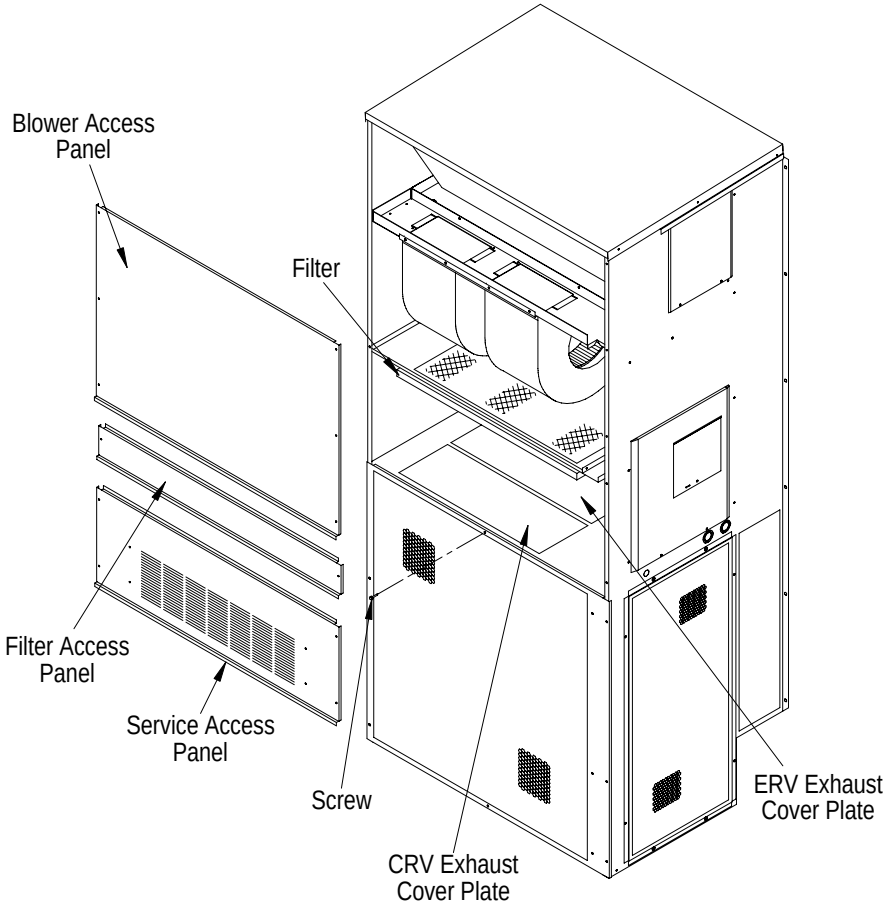

MIS-2029

IMPORTANT: Position front lip of ventilator on top of front grille and condenser partition. (See Figure 2 inset.) This is important to ensure proper drainage of any water entering damper assembly.

6. Open control panel to gain access to unit low voltage terminal block.
7. Route electrical harness leads through the 7/8" bushings in control panel (See Figure 2) into low voltage box.
8. Install the vent control board in the upper left corner of the control panel. Route the pink, purple and black wires through the upper grommet.

FIGURE 2
INSTALL VENTILATOR

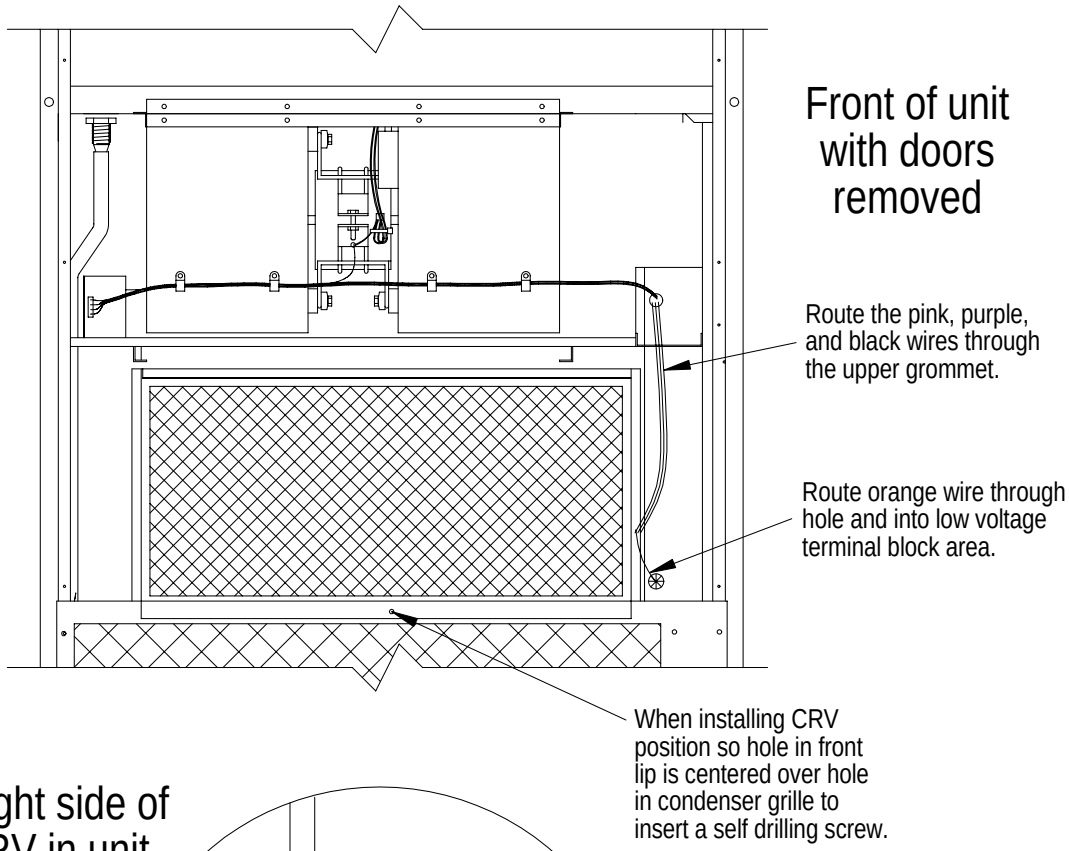

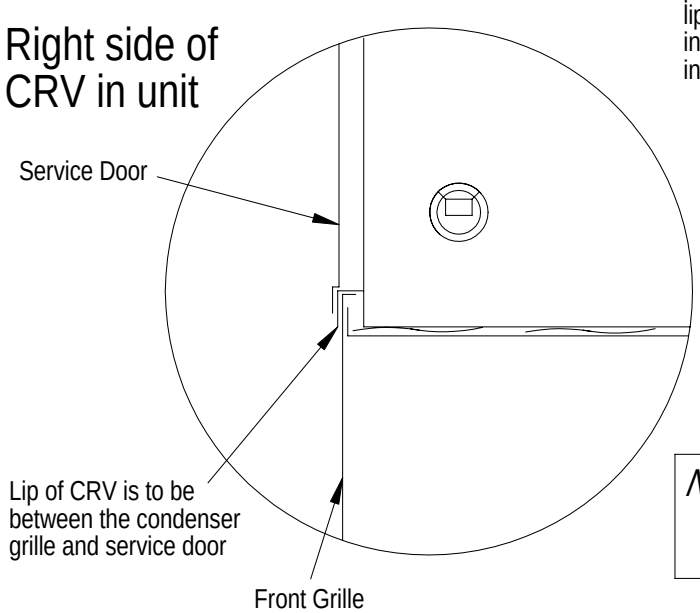

FIGURE 3 INSET
SIDE SECTION

Note: Plug the (4) Ø.125 holes in the service door with canoe clips.

MIS-2030

9. Connect purple wire from CHCRV to P terminal on vent control. Connect pink wire from CHCRV to P1 on vent control. Connect black wire from CHCRV to C on vent control. Connect orange wire from CHCRV to 01 terminal on unit low voltage terminal block. Connect black wire from vent control to C terminal on low voltage terminal strip. Connect purple wire from vent control to Y1 terminal on low voltage terminal strip. Connect yellow wire from vent control to Y terminal on low voltage terminal strip. Connect red wire from vent control to R on low voltage terminal strip.
10. Close control panel cover
11. Replace left filter support, filter and four (4) screws in condenser grille.
12. Reinstall the blower access panel at top of unit and secure with sheet metal screws.
13. Ventilator Checkout
    A. Resupply power to unit.
    B. Energize the evaporator blower by switching thermostat to the manual fan position with heat/cool in OFF position.
    C. Ventilator should open to the position set by #1 Potentiometer on vent control. Cycle position adjustment thumbwheel to full open through full close. Observe damper blade operation throughout travel to assure free, unobstructed movement.
    D. De-energize evaporator blower. Damper blade should close.
    E. This completes ventilator checkout.
14. Replace mist eliminator. Be sure it is installed with the drain holes to the bottom.
15. Remove blank off plate or barometric fresh air damper installed on service access door. Plug four (4) mounting holes with the plastic plugs provided with the ventilator.
16. Replace service access panel.
17. Ventilator is now ready for operation.

CO_2 CONTROL

For CO_2-based control, add a CO_2 sensor/controller (Bard Part #8403-056) to the wall and run additional optional wires as shown in Figure 3.

FIGURE 3
LEAD CONNECTIONS

TO SET CRV AIRFLOW FOR BLOWER ONLY, JUMPER R,G,O1. ADJUST POT #1.
TO SET CRV AIRFLOW FOR 1ST STAGE COOLING, JUMPER R,G,Y1,O1. ADJUST POT #2.
TO SET CRV AIRFLOW FOR 2ND STAGE COOLING, JUMPER R,G,Y1,Y2,O1. ADJUST POT #3.
TO SET CRV AIRFLOW FOR CO2 MINIMUM POSITION, JUMPER R TO O1, G.
REMOVE JUMPER AFTER COMPLETION OF ADJUSTMENT

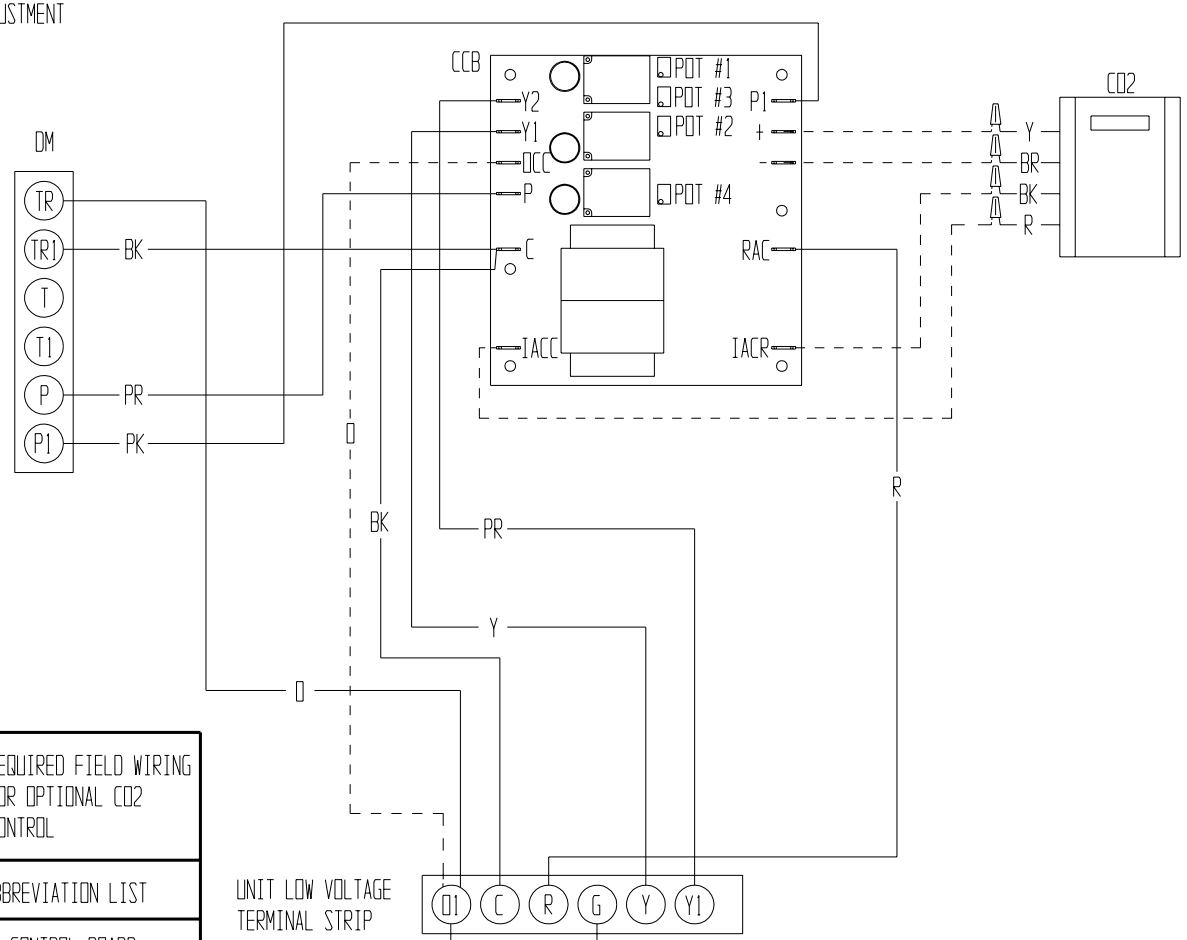

A REMOVE JUMPER WHEN UNIT IS USED WITH OCCUPIED SIGNAL FROM THERMOSTAT.

COLOR CODE	
WIRE COLOR	ABBREVIATION
BLACK	BK
BROWN	BR
RED	R
ORANGE	O
YELLOW	Y
GREEN	G
BLUE	BL
VIOLET(PURPLE)	V(PR)
GRAY(SLATE)	GY(S)
WHITE	W
TAN	T
PINK	PK
LAVENDER	L

- - - - - REQUIRED FIELD WIRING FOR OPTIONAL CO2 CONTROL

PART ABBREVIATION LIST	
CCB	CRV CONTROL BOARD
CO2	CARBON DIOXIDE SENSOR
DM	DAMPER MOTOR

BLADE ADJUSTMENT FOR DESIRED VENTILATOR AIR

The amount of ventilation air supplied by the commercial room ventilator is dependant on four (4) factors.

1. Return air duct static pressure drop.
2. Supply air duct static pressure drop.
3. Indoor blower motor speed.
4. Damper blade open position setting.

Refer to the graph below to determine the blade setting necessary to achieve the ventilation air required for each operating mode.

Factory default settings are:

Potentiometer 1.	17
Potentiometer 2.	14
Potentiometer 3.	12
Potentiometer 4.	Not set. Must be adjusted in the field if a CO_2 sensor is used.

For more accurate adjustment, use a flowhood over the intake opening to measure and adjust the airflow operation.

Potentiometer 1.	Adjusts the airflow during blower operation only.
Potentiometer 2.	Adjusts the airflow during 1st stage cooling or heating operation.
Potentiometer 3.	Adjusts the airflow during 2nd stage cooling or heating operation.

Energize blower only mode and adjust #1 Potentiometer to desired airflow.

Energize 1st stage cooling mode and adjust #2 Potentiometer to desired airflow.

Energize 2nd stage cooling mode and adjust #3 Potentiometer to desired airflow.

Potentiometer 4.	Adjusts the damper blade minimum position when used with CO_2 control. Set minimum position airflow to .15 CFM per square foot or as applicable local codes require.

Energize OCC terminal on vent control to set damper blade minimum position when using CO_2 control.

GRAPH 1

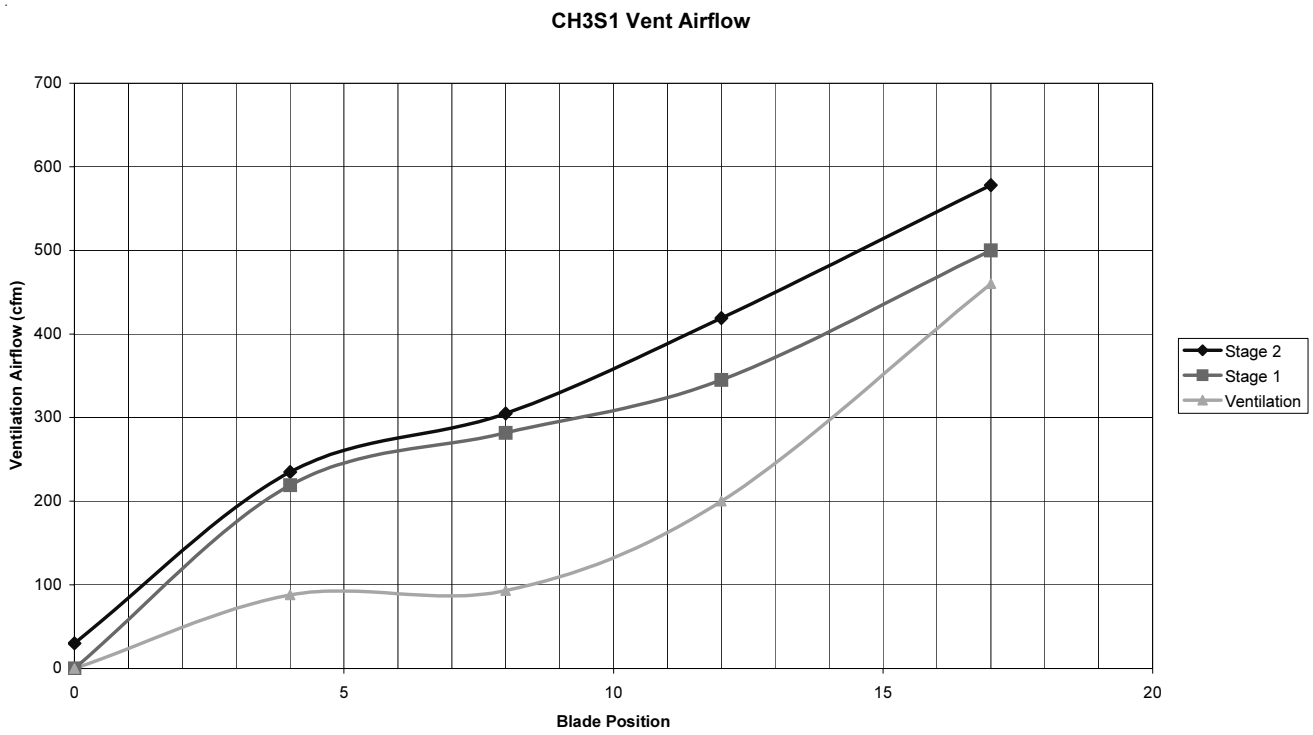

GRAPH 2

CH4S1 Vent Airflow

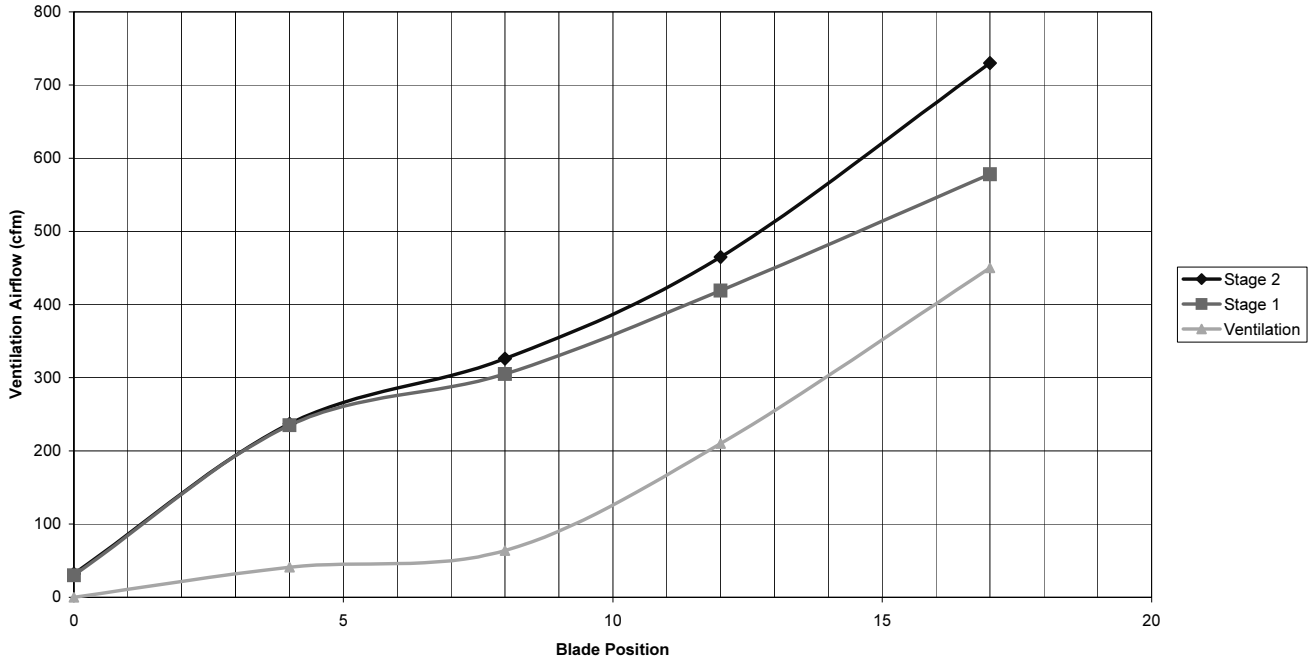

GRAPH 3

CH5S1 Vent Airflow

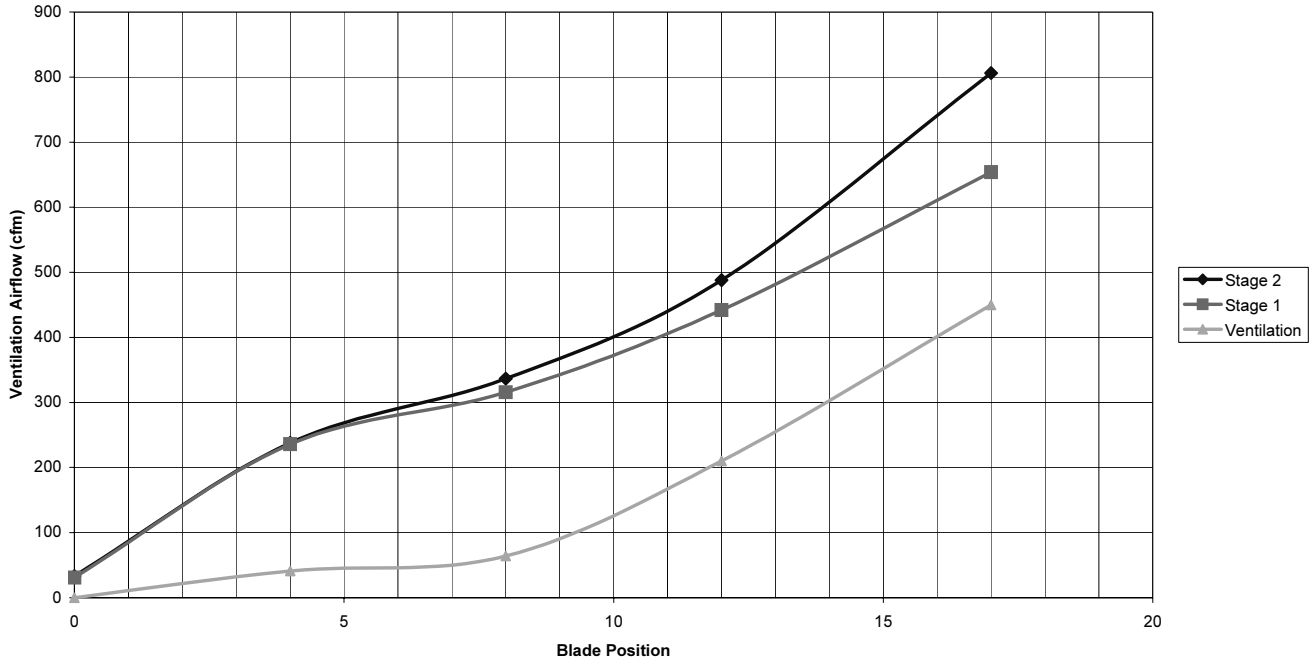

COMMERCIAL ROOM VENTILATOR – CH SERIES

FEATURES

- One piece construction – easy to install with no mechanical linkage adjustment required.
- Exhaust air damper – built in with positive closed position. Provides exhaust air capability to prevent pressurization of tight buildings.
- Actuator motor – 24 volt, power open, spring return with built in torque limiting switch.

COMMERCIAL ROOM VENTILATOR SEQUENCE OF OPERATION

On a call for blower operation, CRV opens to a position as set by #1 Potentiometer. See Figure 4.

FIGURE 4
CALL FOR BLOWER OPERATION

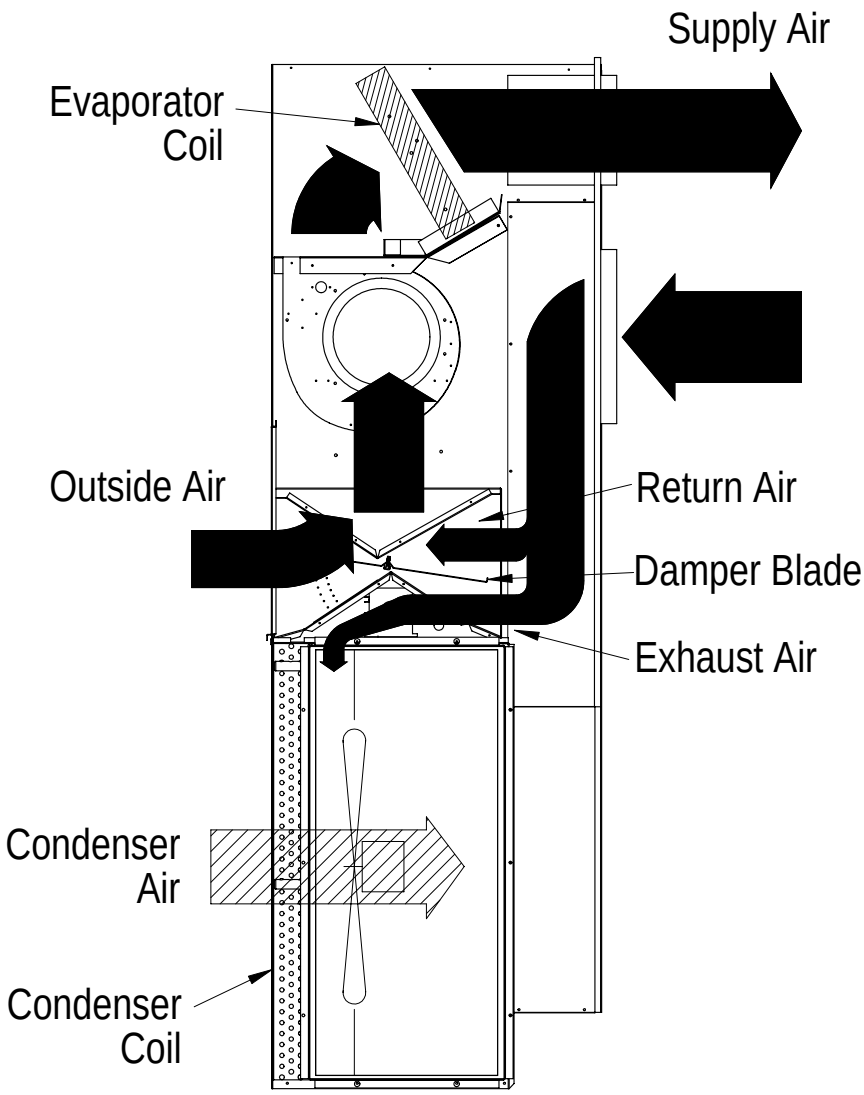

MIS-1944

A call for 1st stage cooling or heating cycles the compressor, and the dampers reposition to the Potentiometer #2 setpoint. A call for 2nd stage cooling or heating energizes compressor solenoid and repositions the damper blade to the Potentiometer #3 position. On loss of blower operation, CRV closes fully. See Figure 5.

FIGURE 5
CALL FOR COOLING OPERATION

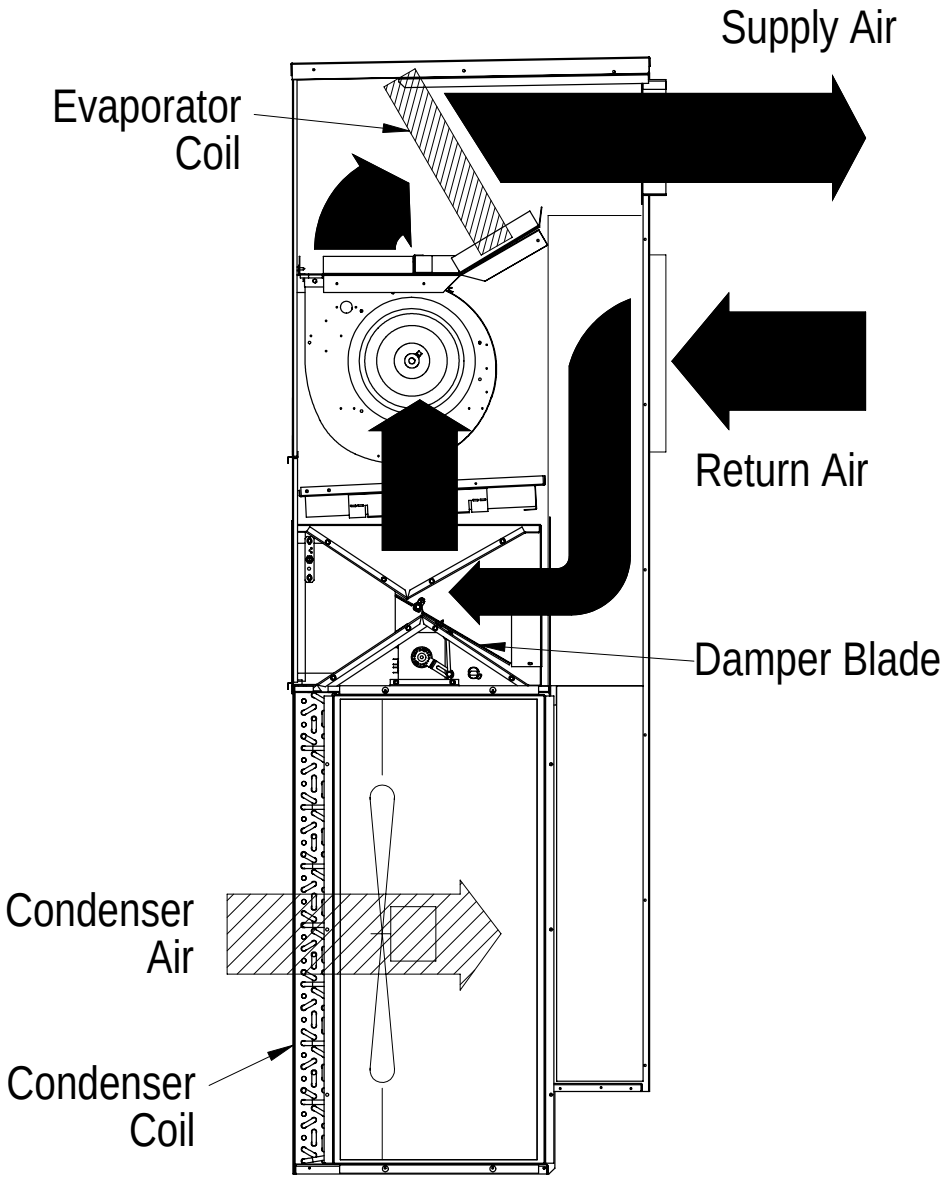

MIS-2031