INSTALLATION INSTRUCTIONS & REPLACEMENT PARTS LIST

MC3000 SERIES SOLID STATE DUAL UNIT LEAD/LAG CONTROLLER

Bard Manufacturing Company, Inc.
Bryan, Ohio 43506

Since 1914...Moving ahead, just as planned.

CLIMATE CONTROL SOLUTIONS

Manual No.: 2100-452F
Supersedes: 2100-452E
File: Vol. III Tab 19
Date: 08-18-09

© Copyright 2004

CONTENTS

Getting Other Information and Publications 3

MC3000 General Information
Shipping Damage 4
General 4
Theory of Operation 4
Controller Certifications 4

Specifications/Features for Basic Controller
MC3000 Basic Controller 5

Mounting the Controller
Installation Instructions 5

Temperature Sensors
Two Optional Sensor Inputs 5

Temperature Sensor Logic
Using Multiple Sensors 5

Controller Input/Output Specifications
MC3000 Controller Connections 6

Specifications/Features for Alarm Boards
MC3000-A with Optional Base Alarm 6
MC3000-B with Enhanced Version Alarm 6

Low Voltage Field Wiring
Circuitry in the MC3000 7

Controller Grounding
Earth ground 7

Controller Power-Up
Time Delay on Power-Up 7

Fire Suppression Circuit
Disabling the MC3000 7

Staging Delay Periods
Stages 1 - 4 7

Blower Operation
Various Blower Options 7

Advance (Swap) Lead/Lag Unit Feature
Manual Switching of Units 7

Accelerate Timer Feature
Testing the Timer Function 7

Humidity Control Option
Adding Optional Humidity Control 8

Sequence of Operation - Cooling (Air Conditioners)
No Economizer 8
With Economizers 8

Sequence of Operation - Heating (Air Conditioners)
With Electric Heat 9

Sequence of Operation - Heat Pumps
Cooling Mode - No Economizers 9
Cooling Mode - With Economizers 9

Sequence of Operation - Heat Pumps
Heating Mode 9

Controller Wiring
Refer to Connection Diagram 9

HVAC Output Relays
Converting to "NC" Normally Closed Status .. 9 & 10

Security (Locking) Feature
Locking and Unlocking the MC3000 10

Generator Run Feature
Standby Generator Disable Operation 10

Backup DC Power Connection
Input Connections Available 10

Alarm Wiring
Wiring Alarm Relays 16

2nd Stage Cooling Alarm
Alarm Output is Available 16

Refrigerant Pressure Alarms
Connecting the Alarm Circuit 16

Emergency Ventilation Sequence
Two Operating Sequences 16

Programming Instructions 19

Figures
Figure 1 Controller Connections 1-Stage (WA/WL-Series) Air Conditioners with No Economizers 11
Figure 2 Controller Connections 1-Stage (WA/WL-Series) Air Conditioners with Economizers 12
Figure 3 Controller Connections 2-Stage (WAxS Series) Air Conditioners with No Economizers 13
Figure 4 Controller Connections 2-Stage (WAxS Series) Air Conditioners with Economizers 14
Figure 5 Controller Connections (WH/SH-Series) Heat Pumps with No Economizers 15
Figure 6 Alarm Board Connections for Normally Closed "NC" Open-On-Alarm Strategy 17
Figure 7 Alarm Board Connections for Normally Open "NO" Close-On-Alarm Strategy 18
Figure 8 Parts List Description 21

Tables
Table 1 Parts List 22

Getting Other Information and Publications

These publications can help you install the air conditioner or heat pump. You can usually find these at your local library or purchase them directly from the publisher. Be sure to consult current edition of each standard.

Standard for the Installation ..... ANSI/NFPA 90A
of Air Conditioning and
Ventilating Systems

Standard for Warm Air Heating ..... ANSI/NFPA 90B
and Air Conditioning Systems

FOR MORE INFORMATION, CONTACT THESE PUBLISHERS:

ACCA **Air Conditioning Contractors of America**
1712 New Hampshire Avenue, NW
Washington, DC 20009
Telephone: (202) 483-9370
Fax: (202) 234-4721

ANSI **American National Standards Institute**
11 West Street, 13th Floor
New York, NY 10036
Telephone: (212) 642-4900
Fax: (212) 302-1286

ASHRAE **American Society of Heating, Refrigerating, and Air Conditioning Engineers, Inc.**
1791 Tullie Circle, N.E.
Atlanta, GA 30329-2305
Telephone: (404) 636-8400
Fax: (404) 321-5478

BARD **Bard Manufacturing Company, Inc.**
1914 Randolph Drive
Bryan, OH 43506
Telephone: (419) 636-1194
Fax: (419) 636-2640

** IMPORTANT **

The equipment covered in this manual is to be installed by trained, experienced service and installation technicians. Please read entire manual before proceeding.

SHIPPING DAMAGE

Upon receipt of equipment, the carton should be checked for external signs of shipping damage. If damage is found, the receiving party must contact the last carrier immediately, preferably in writing, requesting inspection by the carrier's agent.

GENERAL

These instructions explain the operation, installation and troubleshooting of the MC3000 controller.

All internal wiring is complete. Only attach low voltage field wiring to designated terminal strips.

The MC3000 is for use with units with or without economizers, can be configured for use with heat pumps, and has a dehumidification control feature if an optional humidity controller is connected.

Each unit should be sized to handle the total load of the structure if 100% redundancy is required.

It is recommended that a five (5) minute compressor time delay relay be installed in each unit.

The MC3000 controller is suitable for both 50 and 60 HZ operation, and is fully configurable such that it can be used in virtually any installation. See Controller Programmable Features and Default Settings.

THEORY OF OPERATION

The controller is used to control two wall mount air conditioners from one control system. It provides total redundancy for the structure and equal wear on both units. It can be used with units with or without economizers and it is recommended that both units be equipped alike.

The MC3000 can be equipped with one of two alarm boards, and these can be factory-installed or installed at any time in the field if so desired.

Should the base controller alone be initially installed, it is easily upgradeable by simple snap-in, plug-in field installation of either one of the alarm boards, requiring only the connection of the building alarm circuitry to the alarm boards. Form C dry contact alarm relays are used, offering both NO and NC switching to meet the user's specific alarm protocol, providing complete flexibility to meet any user's requirements. All alarm actuations are individually indicated on the controller front panel.

CONTROLLER CERTIFICATIONS

The MC3000 main controller board, optional alarm boards, and remote sensors have undergone extensive testing for immunity and emissions. This system is FCC-compliant, in accordance with CE requirements, and meets the following standards:

EN50082-2 Standard for Immunity
EN55011 Standard for Emissions

SPECIFICATIONS/FEATURES FOR BASIC CONTROLLER

MC3000 Basic Controller

•Input power: 18 to 32 VAC, 60/50Hz, power is supplied from A/C #1 and/or A/C #2
•Isolation circuitry: no line or low voltage phasing required
•Backup power: connection for -24 VDC or -48 VDC (-20 to -56V) maintains microprocessor operation, front panel indication, and alarm relay operation during commercial power outages.
•Digital display: 4-character LCD
•Temperature display: F or C
•HVAC outputs: Form A (NO) relays (1A @ 24 VAC) *
•Cooling control stages: 2 for each A/C unit (4 total) when configured for economizers
: 1 for each A/C unit (2 total) when configured for no economizers
•Heating Control stages: 1 for each A/C unit, 2 for each heat pump if so configured
•Dehumidification circuit: requires optional humidity controller as input signal
•Operating temperature range: 0 to 120F (-18 to 49C)
•Storage temperature range: -20 to 140F (-29 to 60C)
•Temperature accuracy: +/- 1F from 60-85F (16-30C)
+/- 1% outside 60-85F
•Lead/lag changeover time: 0 to 30 days
•Timing accuracy: +/- 1%
•Inter-stage time delay: 10 seconds between stages
•Inter-stage differential: 4F (3C) for standard A/C mode
2F (1C) for economizer mode
•On-Off differential: 2F (1C) is standard, 4F (3C) when "excessive cycling" mode is enabled
•Cooling set point range: 65 to 90F (18 to 32C)
•Comfort setting-Cooling 72F (22C), Heating 68F(20C), for 1 hour
•Dead band (difference between cooling and heating set points): 2F to 20F (1C to 10C)
•Fire/smoke interface: standard NC circuit jumper, remove for connection to building system control, shuts down both A/C units immediately
•Memory: EEPROM for set point and changeable parameters (maintains settings on power loss)
•Space temperature sensors: 1 local is standard, will accept up to 2 optional 25-foot remote sensors, Bard part number 8612-023. When multiple sensors are used, temperatures are averaged
•Controller Enclosure: 20-gauge pre-painted steel, 9.25"W x 13.50"H x 3.00"D, hinged cover, thirteen (13) .875" diameter electrical knockouts
•LEDs for basic controller: Lead unit, Cooling stages 1 through 4, Heating Stages 1 through 4, Dehumidification operation
•Six (6) Push-button controls: On/Off switch-Change lead unit-Increase and Decrease set points-Program/Save-Comfort.

MOUNTING THE CONTROLLER

Included in the controller carton is the controller and installation instructions.

The controller should be installed on a vertical wall approximately four (4) feet above the floor - away from drafts and outside doors or windows. Four (4) mounting holes are provided for mounting to the wall, and 7/8" holes for conduit connections are provided in both the base, sides and top of the controller.

TEMPERATURE SENSORS

The standard (local) temperature sensor has 12" leads and comes installed from the factory.

The controller is designed to accept 1 or 2 additional sensors and those have 25-foot leads. The Bard part number for the optional sensor with 25-foot leads is 8612-023. These can be installed as required in the structure to address hot spots, barriers to airflow, etc.

It is recommended that the sensor lead wires be installed in conduit for protective purposes.

If alarm boards are utilized, the highest reading of any connected sensor will be used for high temperature alarm and the lowest reading sensor will be used for low temperature alarm.

> ***NOTE:*** All sensors are polarity sensitive. The copper lead must connect to terminal CU, and the silver lead to AG.
>
> Sensors are solid state, not RTD. Use only sensors supplied by Bard.

TEMPERATURE SENSOR LOGIC

The standard local **(Loc)** sensor monitors the temperature at the controller location. If this is the only sensor connected, it will control the temperature read-out, the space (building) temperature, and also be used for Low and High Temperature alarm functions.

If one or more **REMOTE** sensors are installed and connected (**Rem 1** or **Rem 2**), the temperature read-out will display and the building will be controlled to an **average** of all connected sensors. If there is more than 10F difference from the highest to the lowest connected sensor, the actual control will be governed by the hottest sensor for cooling and the coldest sensor for heating.

If multiple temperature sensors are used, the High and Low temperature alarms will be governed by the average of the connected sensors.

CONTROLLER INPUT/OUTPUT SPECIFICATIONS

MC3000 CONTROLLER CONNECTIONS

Located on Main Controller Board

Unit #1	C – 24VAC common R – 24VAC hot G – fan (Form A, NO) Y1 – 1st-stage cool (Form A, NO) Y2 – 2nd-stage cool (Form A, NO) W – heat (Form A, NO)
Unit #2	C – 24VAC common R – 24VAC hot G – fan (Form A, NO) Y1 – 1st-stage cool (Form A, NO) Y2 – 2nd-stage cool (Form A, NO) W – heat (Form A, NO)
F1-F2	Fire/smoke interface Shipped with jumper installed (a)
48Vdc	Back-up power input -24Vdc or –48Vdc -20V to –56V range
Local	Main sensor, 12-inch leads CU – copper, AG – silver Polarity sensitive
Rem 1	Optional remote indoor sensor CU – copper, AG – silver Polarity sensitive
Rem 2	Optional remote indoor sensor CU – copper, AG – silver Polarity sensitive
Gen	Generator interface G1-G2 Shipped with jumper installed (a)
H1-H2	Humidity controller input Requires optional controller Field installed

NOTE:
Sensors are solid state, not RTD.
Use Bard sensors only.

(a) These connections require either jumper or Normally Closed (NC) relay contact at the Fire/Smoke and Generator interface for Controller to function.

Note: All alarm/output relays are dry contacts rated 1A @ 24 VAC, 120 VAC or 150 VDC.

SPECIFICATIONS/FEATURES FOR ALARM BOARDS

MC3000-A w/Optional Base Alarm Board (Inputs/Outputs)

NOTE: If this alarm board was not originally factory installed, it can be field-installed at anytime. Bard part number is AB3000-A.

Inputs	
Lockout 1	2,3 – input from HVAC #1
Lockout 2	2, 3 – input from HVAC #2
Outputs	
Smoke/Fire	Form C (SPDT)
Lockout 1	Form C (SPDT) Refrigerant alarm HVAC #1
Lockout 2	Form C (SPDT) Refrigerant alarm HVAC #2
Power Loss 1	Form C (SPDT) Power loss HVAC #1
Power Loss 2	Form C (SPDT) Power loss HVAC #2
Low Temp	Form C (SPDT) Low temperature alarm
High Temp 1	Form C (SPDT) High temperature alarm #1

MC3000-B w/Enhanced Version Alarm Board (Additional Outputs) plus MC3000-A Inputs/Outputs

NOTE: If this alarm board was not originally factory installed, it can be field-installed at anytime. Bard part number is AB3000-B.

High Temp 2	Form C (SPDT) High temperature alarm #2
Controller	Form C (SPDT) Controller failure alarm
Econ 1	E, F - Form A (NO) See note (c)
Econ 2	E, F - Form A (NO) See note (c)
2nd Stage	Form C (SPDT) 2nd-stage cooling alarm

(b) Make these connections to terminals E & F in HVAC 1 and 2 respectively if desired to have economizers open for emergency ventilation at High Temp Alarm #2 setpoint condition.

Alarm relays can be wired for NO (close on alarm) or NC (open on alarm) strategy. Alarm relays can be used individually if there are enough available building alarm points, or can be arranged into smaller groups or even a single group so that all alarm capabilities can be utilized. When multiple alarms are grouped together and issued as a single alarm there will be no off-site indication of which specific problem may have occurred, only that one of the alarms in the group has been triggered. The individual alarm problem will be displayed on the LED display on face of the controller.

LOW VOLTAGE FIELD WIRING

The MC3000 is powered from the air conditioners that it is controlling, 24 VAC (18-32V) low voltage only.

Circuitry in the MC3000 isolates the power supplies of the two air conditioners so that no back feeds or phasing problems can occur. Additionally, if one air conditioner loses power, the MC3000 and the other air conditioner are unaffected and will continue to operate normally.

Connect the low voltage field wiring from each unit per the low voltage field wiring diagrams in Section on "Controller Wiring". *NOTE: Maximum of 18-gauge control wiring should be used. Using heavier gauge wiring can create excessive stress on the control board as door is opened and closed. Create a wiring loop so the door can open and close without stressing terminal blocks.*

CONTROLLER GROUNDING

A reliable earth ground must be connected in addition to any grounding from conduit. Grounding lugs are supplied for this purpose.

CONTROLLER POWER-UP

Whenever power is first applied to the controller, there is a twenty (20) second time-delay prior to any function (other than display) becoming active. This time-delay is in effect if the controller On/Off button is used when 24VAC from air conditioners is present, and also if controller is in "ON" position and 24VAC from air conditioners is removed and then restored.

FIRE SUPPRESSION CIRCUIT

To disable the MC3000 and shut down both air conditioners, terminals F1 and F2 may be used. The F1 and F2 terminals must be jumpered together for normal operation. A normally closed (nc) set of dry contacts may be connected across the terminals and the factory jumper removed for use with a field-installed fire suppression system. The contacts must open if a fire is detected. See appropriate connection diagram - Figures 1, 2 or 3 for this connection. Contacts should be rated for pilot duty operation at 2 amp 24VAC minimum. Shielded wire (22-gauge minimum) must be used, and the shield must be grounded to the controller enclosure.

IMPORTANT NOTE: Some Bard models employ an electronic blower control that has a 60-second blower off-delay. In order to have immediate shutdown of the blower motor, in addition to disabling the run function of the air conditioners will require a simple wiring modification at the blower control located in the electrical control panel of the air conditioners being controlled by the lead/lag controller. To eliminate the 60-second blower off-delay, disconnect and isolate the wire that is factory-connected to the "R" terminal on the electronic blower control, and then connect a jumper from the "G" terminal on the blower control to the "R" terminal on the blower control. The electronic blower control will now function as an on-off relay with no off-delay, and the blower motor will stop running immediately when the F1-F2 fire suppression circuit is activated (opened).

STAGING DELAY PERIODS

The following delays are built in for both cooling and heating:

Stage 1 – 0 seconds for blower (if not already on as continuous)
10 seconds for cooling or heating output

Stage 2 – 10 seconds after Stage 1 for blower
10 additional seconds for cooling or heating output

Stage 3 – 10 seconds after Stage 2

Stage 4 – 10 seconds after Stage 3

Note: For cooling Stages 1 and 2, the stage LED will blink for 10 seconds while the cooling output is delayed after that stage is called for. There is also a delay after the stage is satisfied, and after the LED stops blinking, the stage will turn off. There is a minimum 10-second delay between stages 2 & 3, and 3 & 4, but no delayed output when stage is turned on or off, and LED for those stages will not blink.

BLOWER OPERATION

The controller can be configured to have main HVAC blowers cycle on and off on demand; have all blowers run continuously; or have the lead unit blower run continuously with the lag unit blower cycling on demand. Lead unit blower operating continuously is the default setting. There is also an option to have all blowers cycle on if one remote sensor is connected, and a temperature difference of more than 5F between any two sensors is observed. This helps to redistribute the heat load within the structure and should reduce compressor operating time.

When any of the stages are satisfied, the stage LED will blink for ten (10) seconds before the stage is actually turned off.

ADVANCE (SWAP) LEAD/LAG UNIT FEATURE

Pressing the Advance button for one (1) second will cause the lead and lag units to change positions. This may be useful during service and maintenance procedures.

ACCELERATE TIMER FEATURE

Pressing the UP arrow button for five (5) seconds will activate an accelerate (speed-up) mode, causing the normal changeover time increments of days to be reduced to seconds. Example: 7 days becomes 7 seconds. When "ACC" displays, release button. Whichever LED is on, indicating lead unit will blink over for each second until the controller switches. This is a check for the timer functionality.

HUMIDITY CONTROL OPTION

Note: *This function is not available if controller is configured for heat pump.*

The standard air conditioning system can be adapted to perform dehumidification control by addition of a simple humidity controller that closes-on-rise, and is connected to terminals H1 and H2 on the main controller board. Recommended Bard part number is 8403-038 (H600A 1014). See appropriate connection diagram - Figures 1, 2 or 3 for this connection.

The humidity control logic needs to be enabled in the program menu. Go to HuLE in the Programming Menu and change from No to Yes. This permits the following sequence of operation:

1. Temperature control always has priority over dehumidification. If there is any stage of cooling demand active, the dehumidification sequence is locked out.
2. If all stages of cooling are satisfied, and relative humidity is above the set point of humidity controller:
   a. The green "Dehumid. Operation" light will come on, and the lag unit compressor and blower will operate until the set point of humidity controller is satisfied (or cancelled by a call for cooling).
   b. If the space temperature drops to 67F, the electric heater of the lead unit will cycle to help maintain building temperature. It will cycle off at 69F.
   c. If space temperature drops to 64F, the Stage 2 Heating light will come on and the lag unit compressor operating for dehumidification mode will cycle off until the building temperature rises above 65F from 1st stage heat and building load. The green "Dehumid. Operation" light stays on during this sequence, and when Stage 2 Heating light is Off, the compressor is On. The electric heater in lag unit is locked out in dehumidification mode.

⚠ CAUTION

Humidity controller set point should be in 50-60% relative humidity area: Setting controller to lower settings will result in excessive operating time and operating costs for the electric reheat, and in extreme cases could cause evaporator (indoor) coil freeze-up if there are periods of light internal equipment (heat) loading.

SEQUENCE OF OPERATION – COOLING AIR CONDITIONERS – (NO ECONOMIZER)

First stage cooling set point is the setting (SP) input into the controller. Factory default is 75F/24C. On a call for cooling, the blower of the lead unit will come on immediately (if not already on - See Blower Operation), and the Stage 1 LED will blink for 10 seconds before going solid, at which time the compressor will start.

Stage 2 cooling set point is 4F (3C) warmer than Stage 1. On a call for 2nd Stage cooling, the blower of the lag unit is turned on, and the stage LED will blink for 10 seconds before going solid, at which time the compressor will start.

Stages 3 and 4 are not active when controller is configured for non-economizer operation.

SEQUENCE OF OPERATION – COOLING AIR CONDITIONERS – (WITH ECONOMIZERS)

First stage cooling set point is the setting (SP) input into the controller. Factory default is 75F/24C. On a call for cooling, the blower will come on immediately (if not already on - See Blower Operation), and the Stage 1 LED will blink for 10 seconds before going solid, at which time the cooling output turns on. If the outdoor temperature and humidity conditions are below the set point of the economizer enthalpy control, the economizer will operate instead of the compressor. If outdoor conditions are not acceptable for free cooling, the compressor will automatically operate instead of the economizer. For WAxS 2-stage compressor units, the compressor will operate on partial capacity Stage 1.

Stage 2 cooling is 2F (1C) warmer than Stage 1. On a call for 2nd Stage cooling, the blower of the lag unit is turned on, and the Stage LED will blink for 10 seconds before going solid, at which time either the economizer or the compressor will turn on - based on enthalpy control setting and outdoor conditions. Compressor sequence same as Stage 1 cooling call.

Stage 3 cooling is 2F (1C) warmer than Stage 2. If Stage 3 becomes active, a signal is input into the lead unit economizer to cancel economizer and force lead unit compressor on. Stage 3 LED comes on solid with no blinking. For WAxS 2-stage compressor units, the compressor will operate on full capacity Stage 2.

Stage 4 cooling is 2F (1C) warmer than Stage 3. If the lead unit compressor and lag unit economizer cooling capacity are not sufficient to hold the building temperature, and Stage 4 becomes active, a signal is input into the lag unit economizer to cancel economizer and force the lag unit compressor on. Stage 4 LED comes on solid with no blinking. For WAxS 2-stage compressor units, the compressor will operate on full capacity Stage 2.

SEQUENCE OF OPERATION – HEATING (AIR CONDITIONERS W/ELECTRIC HEAT)

First stage heating set point is the dead band setting below first stage cooling set point (the SP entered into the program). The dead band is adjustable from 2-20F (1-10C), and the factory default is 10F (5C).

Second stage heating set point is 4F (3C) cooler than Stage 1.

Stages 3 and 4 are not active when controller is configured for air conditioners with electric heat.

SEQUENCE OF OPERATION – HEAT PUMPS ONLY COOLING MODE – (NO ECONOMIZERS)

First stage cooling set point is the setting (SP) input into the controller. Factory default is 75F/24C. On a call for cooling, the blower of the lead unit will come on immediately (if not already on - See Blower Operation), and Stage 1 LED will blink for ten (10) seconds before going solid, at which time the compressor will start.

Stage 2 cooling set point is 4F (3C) warmer than Stage 1. On a call for 2nd Stage cooling, the blower of the lag unit is turned on, and the stage LED will blink for ten (10) seconds before going solid, at which time the compressor will start.

Cooling Stages 3 and 4 are not active when controller is configured for heat pump operation.

SEQUENCE OF OPERATION – HEAT PUMPS ONLY COOLING MODE – (W/ECONOMIZERS)

Using economizers in heat pump applications can be achieved, but requires an additional control relay for each system. These relays can be installed in the MC3000 controller. Consult factory for further details.

SEQUENCE OF OPERATION – HEAT PUMPS ONLY HEATING MODE

When the MC3000 controller is used for heat pump installations, the second stage (Y2) outputs for both units 1 and 2 are redefined and used to control the reversing valves, which are energized in the heating mode.

Stage 1 heating consists of lead unit blower coming on (if not already on - See Blower Operation) and reversing valve being energized (Bard heat pump reversing valves are energized in heating mode). The Stage 1 heating LED will blink for ten (10) seconds, at which time the compressor turns on.

Stage 2 heating is 2F (1C) cooler than Stage 1. On a call for 2nd Stage heating, the blower of the lag unit and the reversing valve are energized, and the Stage LED will blink for ten (10) seconds before going solid, at which time the compressor turns on.

Stage 3 heating is 2F (1C) cooler than Stage 2, and when Stage 3 becomes active, the electric heater in the lead unit turns on. Stage 3 LED comes on solid with no blinking.

Stage 4 heating is 2F (1C) cooler than Stage 3, and when Stage 4 becomes active, the electric heater in the lag unit turns on. Stage 4 LED comes on solid with no blinking.

CONTROLLER WIRING

The MC3000 can be used for controlling two (2) air conditioners with or without economizers. It can also be configured for two (2) heat pumps with or without economizers. Units with economizers will connect differently than units without economizers; therefore, it is important to use the correct connection diagram. See Figure 1 for standard air conditioners without economizers, Figure 2 for standard air conditioners with economizers, Figure 3 for 2-stage compressor air conditioners without economizer, Figure 4 for 2-stage compressor air conditioners with economizer, and Figure 5 for heat pumps without economizers.

HVAC OUTPUT RELAYS

The HVAC output relays can be converted to normally closed (NC) status for applications where it is desired to have the cooling (compressor) and blower default to continuous run mode should the controller be turned OFF or have a complete failure.

⚠ CAUTION

Making this change must be a conscious decision as it can result in overcooling the building and/or freeze-up of the air conditioner cooling coils. The user assumes all responsibilities for making these changes.

Actions Required:

1. There are three (3) blue jumper pin connectors for Unit 1 and Unit 2 located on digital display/LED side of the main controller board. The 3 jumpers are for G, Y1 and Y2 output relays, and are factory-shipped in the NO position. To gain access to the jumpers requires removing the five (5) screws securing main board to the controller hinged cover panel.

2. The outputs for Unit 1 can be changed independent of those for Unit 2, or they can both be changed. All three (3) outputs for either Unit 1 and/or Unit 2 must be changed together - DO NOT change Y1 and Y2 without also changing G.

3. After the jumper pins are changed to NC, then the controller program must be changed accordingly. To access the change function for relay logic requires special action. Press the Down arrow button for twenty (20) seconds until “rly 1” displays. Initiate change from normally open (no) to normally closed (nc) using Change button and arrow buttons.

Press Save. The display will then automatically go to "rly2", and if the jumper pins for Unit 2 on main controller board were changed – repeat the procedure. Press Program button to return to Run mode. Repeat this action for Unit 2 ("rly2") if the jumper pins were changed for that system.

NOTE: The fire/smoke suppression circuit will no longer function to turn off the air conditioners if the HVAC output relays are converted to NC function. To achieve the fire/smoke suppression shutdown will require a relay circuit be added to each A/C system to interrupt the 24VAC control transformer outputs.

SECURITY (LOCKING) FEATURE

The MC3000 controller can be locked such that unauthorized persons cannot make any changes to temperature set points or any other selectable parameters of the controller system.

The ON/OFF and Comfort buttons remain fully active for their normal intent. The Advance/Change/Save button remains active for the Advance feature only, which allows the position of the lead and lag air conditioners to be swapped (reversed). The Program button remains partially active - allowing the review of temperature sensor(s) actual reading of temperature, and the current settings/choices that have been chosen. However, no changes can be made when the controller is locked, and if the change button is pressed when in the Program mode, the display will come up showing "Locd" instead of flashing the selectable choices for that parameter. The default (DEF) reset capability is also disabled when the controller is in locked mode.

Locking and Unlocking the MC3000 Controller:

1. Locking the controller requires using 3 buttons while the controller is in the normal operating (run) mode.

2. Press and hold the Advance/Change/Save button and the Up and Down arrow buttons simultaneously for 20 seconds until the display shows "Locd".

3. To unlock the controller, press the Change, Up and Down arrow buttons simultaneously for 20 seconds until the display reads "uLoc".

GENERATOR RUN FEATURE

If desired, the MC3000 controller can be signaled from a standby generator system to lockout (disable operation) of the lag air conditioning system. This is sometimes mandated if the generator size is not sufficient to handle the building load (amperage) and that of both air conditioning systems.

A normally closed (NC) dry contact as part of generator controls is required. These contacts must open when the generator is started, and such action will signal the MC3000 controller to this condition and disable lag air conditioner run function.

A wire jumper is factory-installed across the G1 and G2 terminals or main controller board. To utilize the generator run feature, remove the jumper from G1 and G2, and connect the generator normally closed (NC) contacts that will open-on-run generator condition to the G1 and G2 terminals.

BACKUP DC POWER CONNECTION

There are input connections available for -48V (-44 to -56V) backup power connection. Making this connection will maintain microprocessor operation, front panel display, LED signaling, and alarm relay operation during periods of commercial power outages and when no standby generator is available. This circuit is protected by a replaceable .5A (500mA) 250V fuse.

IMPORTANT

The shelter DC battery power must be connected to the controller and wired as shown in controller wiring diagrams in order to control the DC Fan ventilation package during periods when AC power is not available.

The backup DC power connection is polarity sensitive. If polarity is reversed, the controller will not function on backup power, no display and no alarm functions will be evident.

FIGURE 1
CONTROLLER CONNECTIONS
1-STAGE (WA/WL-SERIES) AIR CONDITIONERS – NO ECONOMIZER

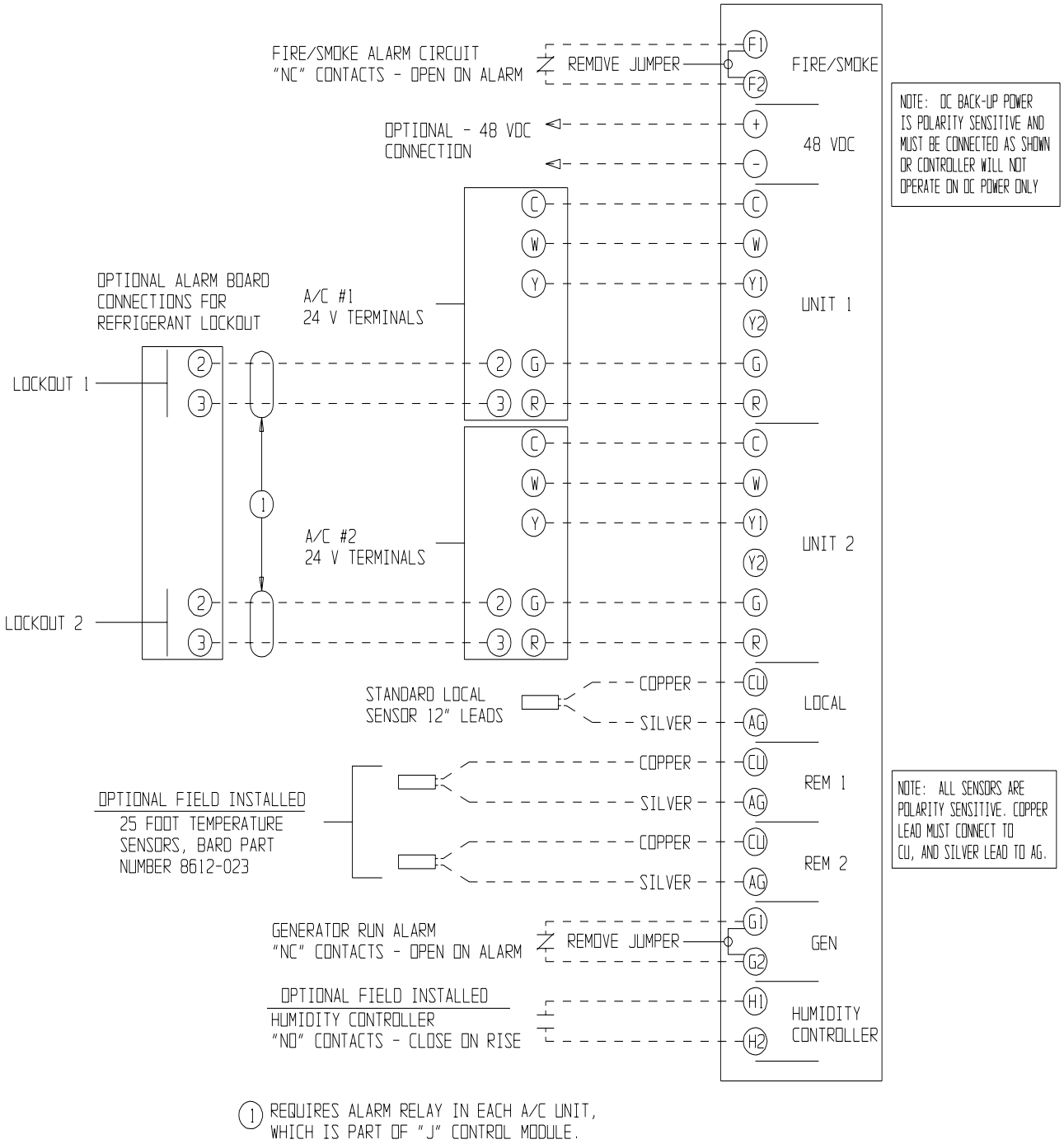

FIGURE 2
CONTROLLER CONNECTIONS
1-STAGE (WA/WL-SERIES) AIR CONDITIONERS – WITH ECONOMIZERS

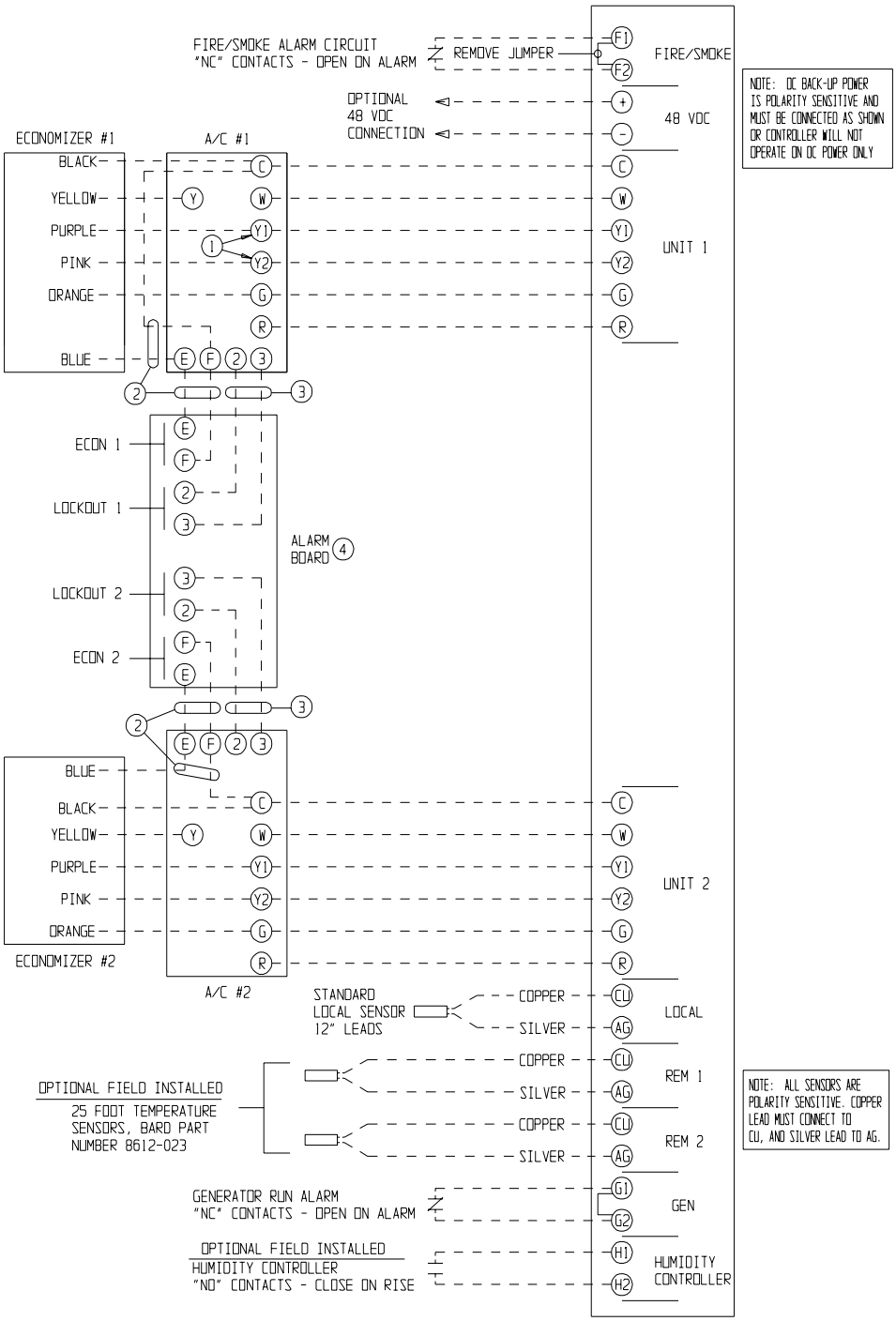

1. Y1 AND Y2 MAY NOT BE ON TERMINAL BOARD, USE WIRE NUTS.
2. CONNECT E AND F IF EMERGENCY VENTILATION ON HIGH TEMP ALARM CONDITION IS DESIRED.
3. REFRIGERANT PRESSURE LOCKOUT ALARM - REQUIRES "J" CONTROL MODULE IN A/C UNITS.
4. THE "E" AND "F" CONNECTIONS FOR EMERGENCY VENTILATION ARE AVAILABLE ONLY ON THE -B ALARM BOARD.

MIS-2013 A

FIGURE 3
CONTROLLER CONNECTIONS
2-STAGE (WAxS SERIES) AIR CONDITIONERS – NO ECONOMIZERS

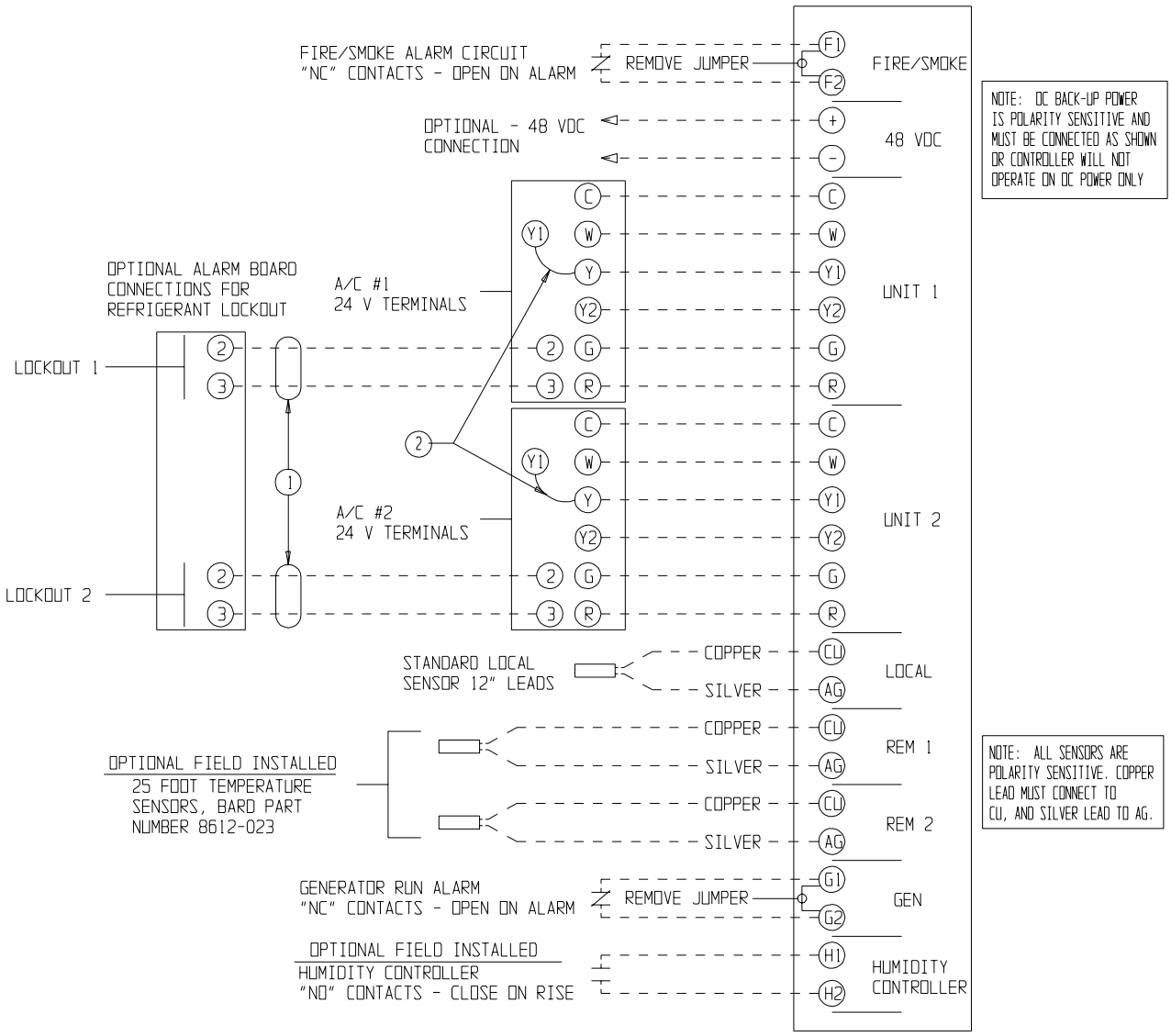

FIGURE 4
CONTROLLER CONNECTIONS
2-STAGE (WAxS SERIES) AIR CONDITIONERS – WITH ECONOMIZERS

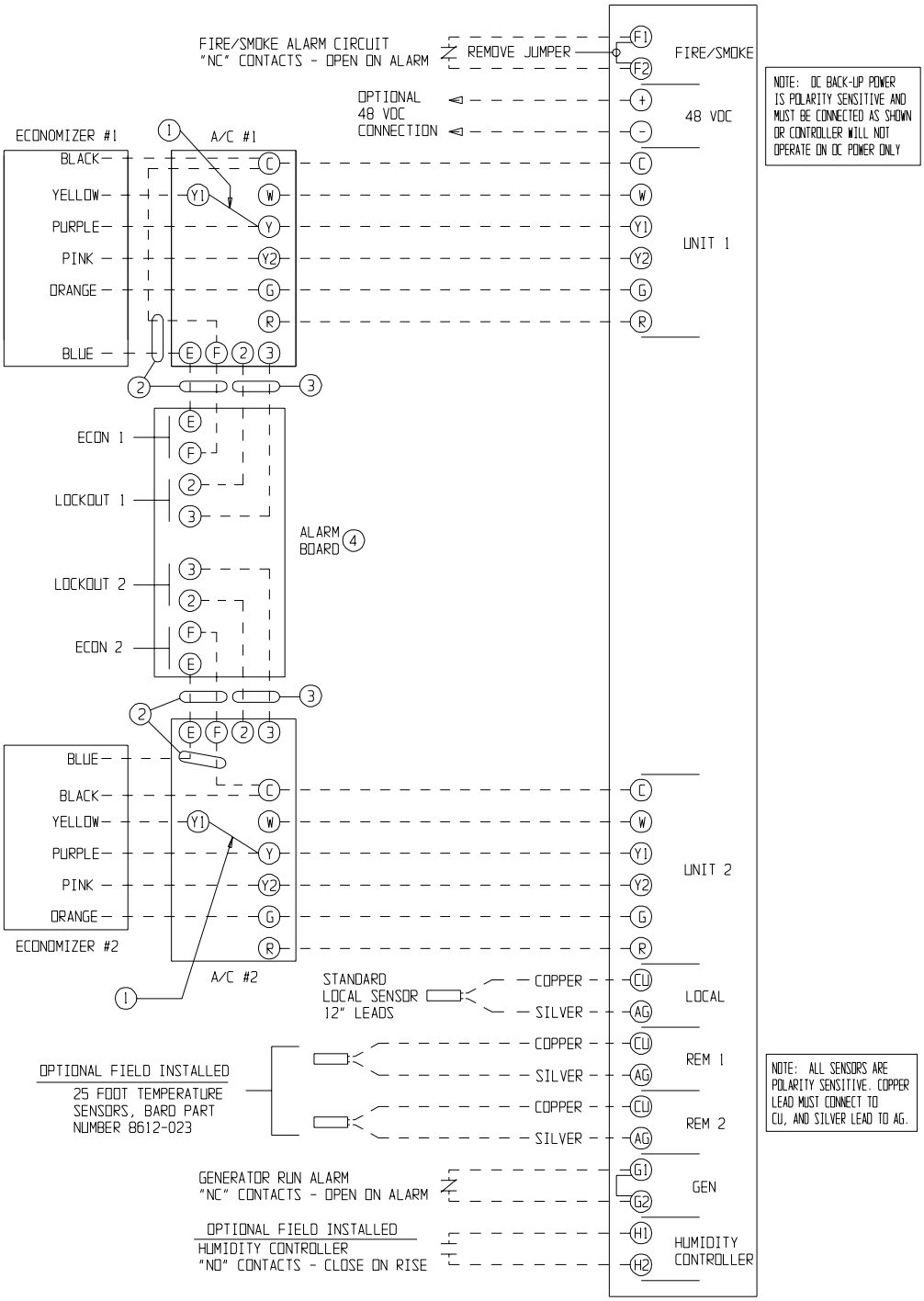

1. REMOVE FACTORY JUMPER Y TO Y1.
2. CONNECT E AND F IF EMERGENCY VENTILATION ON HIGH TEMP ALARM CONDITION IS DESIRED.
3. REFRIGERANT PRESSURE LOCKOUT ALARM - REQUIRES "J" CONTROL MODULE IN A/C UNITS.
4. THE "E" AND "F" CONNECTIONS FOR EMERGENCY VENTILATION ARE AVAILABLE ONLY ON THE -B ALARM BOARD.

MIS-2420

FIGURE 5
CONTROLLER CONNECTIONS
(WH/SH-SERIES) HEAT PUMPS – NO ECONOMIZERS

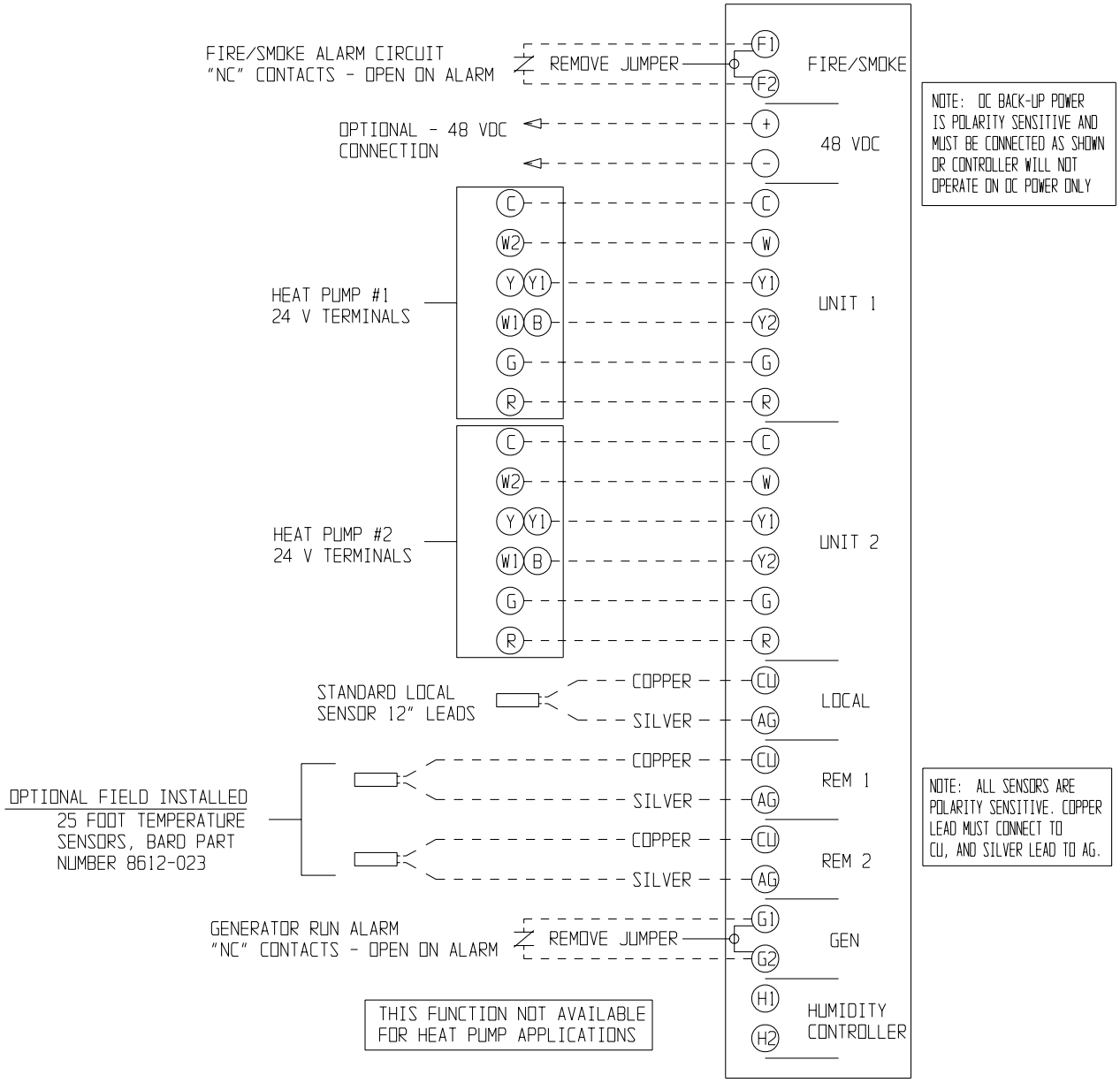

ALARM WIRING

Alarm relays can be wired for NO (close on alarm) or NC (open on alarm) strategy.

Alarm relays can be used individually if there are enough available building alarm points, or can be arranged into smaller groups or even a single group so that all alarm capabilities can be utilized.

When multiple alarms are grouped together and issued as a single alarm, there will no off-site indication of which specific problem may have occurred, only that one of the alarms in the group has been triggered. The individual alarm problem will be shown on the LED display on the face of the controller.

Note: All alarm/output relays are Form C (SPDT) dry contacts rated 1A @ 24 VAC, 120 VAC or 150 VDC.

The Power Loss 1, Power Loss 2 and controller alarm relays are all "reverse actuated", which means they are continuously energized (the NO contact is closed) and switched to NC position upon alarm condition. Therefore, it is important to closely follow the alarm board connection diagrams that follow.

Any alarm feature that is not desired can simply be ignored (not connected).

NOTE: The alarm LED display board is shipped uninstalled to protect it from possible damage during installation of the wiring to main controller board and/or the alarm board. It is polarity sensitive and is keyed so it can only be installed in correct position.

Note: The LED display board can be replaced if needed independently of the alarm board. Bard part number is 8612-022.

ALARM LED DISPLAY BOARD

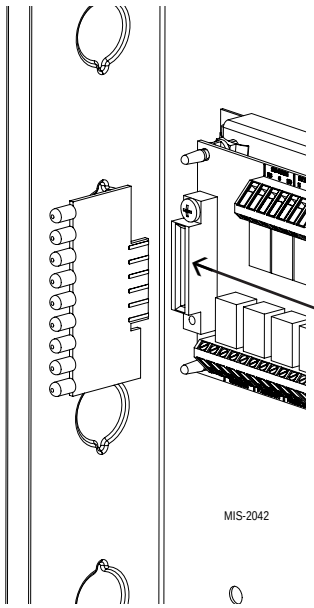

2ND STAGE COOLING ALARM

This alarm output is available for use if desired. It is important to note that in some installations, due to A/C system sizing and internal heat load, that the secondary (lag) air conditioning unit may be called upon to assist the lead air conditioner some of the time. If this is the case, or possibly when additional heat load is added, using the 2nd stage cooling alarm will cause nuisance alarm conditions.

For installations where it is known that there is 100% redundancy (one air conditioning unit can handle 100% of the load 100% of the time) use of the 2nd Stage Cooling Alarm is a method to issue an alarm signal that the lead air conditioner is down (or not delivering full capacity) and that the lag air conditioner is now operating.

REFRIGERANT PRESSURE ALARMS

Air conditioners with "J" control module are equipped with an alarm relay that is activated upon high or low refrigerant pressure lockout conditions. Connecting terminals 2 and 3 from the air conditioner 24V terminal block to the matching terminals 2 and 3 on the alarm board will allow these alarms to function.

EMERGENCY VENTILATION SEQUENCE

For units with economizers, there are two (2) emergency ventilation sequences designed into the controller. Both require the -B alarm board and connection of terminals E and F from the air conditioner 24V terminal block to the matching terminals on the alarm board.

Sequence one requires a refrigerant pressure alarm, coupled with high temperature alarm condition No. 1 (HAL 1 set point). If both of these conditions occur, the economizer in the air conditioner that issued the refrigerant alarm will drive open to ventilate the building.

Sequence two (HAL 2 set point) is activated by high temperature alarm No. 2, and will initiate even without a refrigerant pressure alarm signal. Both economizers will be activated to provide emergency ventilation. This strategy help protect against building overheating if air conditioner(s) are inoperative for non-pressure related reasons (bad compressor, contactor, run capacitor, etc.).

***NOTE:** The LED display board is polarized and will only fit in one direction as shown. It must be fully inserted in order for the controller to function properly.*

FIGURE 6
ALARM BOARD CONNECTIONS
FOR NORMALLY CLOSED "NC" OPEN-ON-ALARM STRATEGY

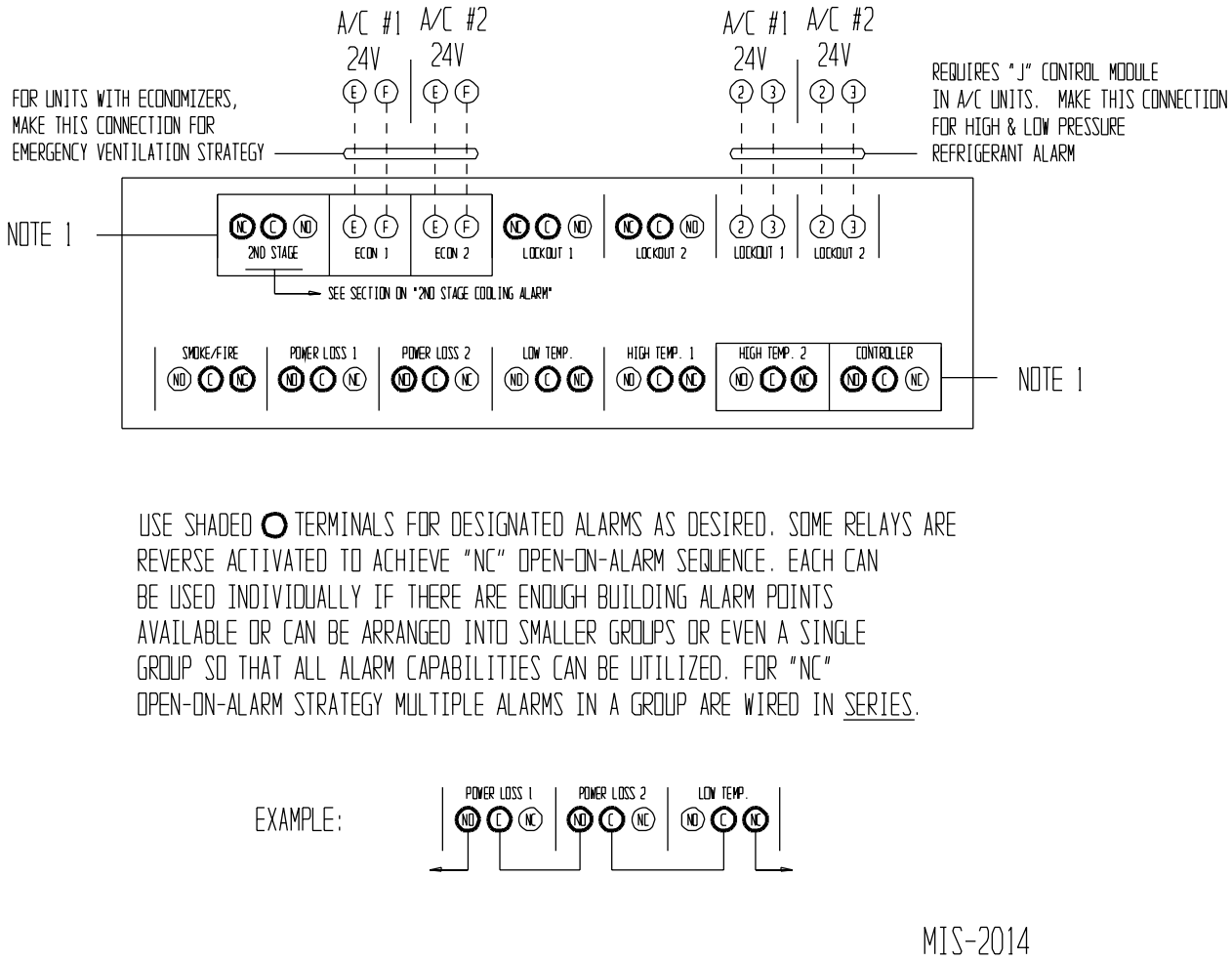

Note 1: 2nd Stage, Econ 1, Econ 2, High Temp 2 and Controller alarms are only on -B alarm board. All other alarms are on both -A and -B alarm boards.

IMPORTANT! *LED display board is shipped loose to protect it from possible damage during installation of the wiring to main controller board and/or the alarm board. It is polarity sensitive and is keyed so it can only be installed in correct position.*

FIGURE 7
ALARM BOARD CONNECTIONS
FOR NORMALLY OPEN "NO" CLOSE-ON-ALARM STRATEGY

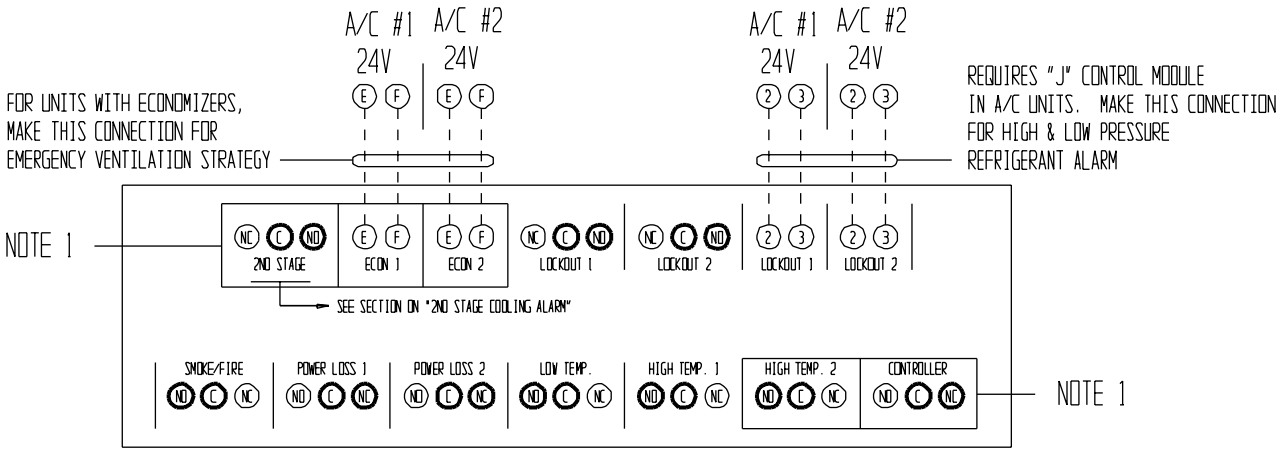

USE SHADED ● TERMINALS FOR DESIGNATED ALARMS AS DESIRED. SOME RELAYS ARE REVERSE ACTIVATED TO ACHIEVE "NO" CLOSE-ON-ALARM SEQUENCE. EACH CAN BE USED INDIVIDUALLY IF THERE ARE ENOUGH BUILDING ALARM POINTS AVAILABLE OR CAN BE ARRANGED INTO SMALLER GROUPS OR EVEN A SINGLE GROUP SO THAT ALL ALARM CAPABILITIES CAN BE UTILIZED. FOR "NO" CLOSE-ON-ALARM STRATEGY MULTIPLE ALARMS IN A GROUP ARE WIRED IN PARALLEL.

EXAMPLE:

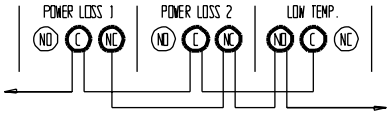

MIS-2015

Note 1: 2nd Stage, Econ 1, Econ 2, High Temp 2 and Controller alarms are only on -B alarm board. All other alarms are on both -A and -B alarm boards.

IMPORTANT! *LED display board is shipped loose to protect it from possible damage during installation of the wiring to main controller board and/or the alarm board. It is polarity sensitive and is keyed so it can only be installed in correct position.*

PROGRAMMING INSTRUCTIONS

To swap lead and lag unit positions, press the ADVANCE button.

To enter the Program mode, press the PROGRAM button and release it when the message PROG appears on the display. When in Program mode, the DOWN and UP arrows are used to scroll through the programming steps.

A FLASHING display means that the function or choice is "SET", and the display will alternate between the step function and setting.

To change the setting of any step, press the CHANGE button and the display will stop flashing, allowing change to the setting by using the DOWN or UP arrows. When desired setting is reached, press the SAVE button, and proceed as desired. When done with programming changes, press the PROGRAM button until display stops flashing and room temperature display is shown. If no buttons are pushed within thirty (30) seconds, the controller will automatically revert back to "RUN" mode.

To reset all controller settings to the factory default values, press the PROGRAM button for 10 seconds until display reads dEF.

NOTE: When the controller has the security locking feature enabled, no changes to any selectable features can be made, and the default reset feature is also locked out. All of the programmable features/settings can be reviewed using the Program button and Up or Down arrows, but any attempt to change settings using the Change button will result is display showing "Locd" indicating controller is locked. See section on Security (Locking) Feature.

See next page for Programmable Features, Default Settings and MC3000 front panel label layout.

*NOTE: When using the controller buttons to review settings or making changes, **push and hold** the buttons for approximately 1 second or until the display changes.*

Quickly pushing or jabbing the buttons will not allow the controller to respond.

Bard SINCE 1914
CLIMATE CONTROL SOLUTIONS

MC3000 Series

Solid State Dual Unit Lead/Lag Controller

1st Stage ○ 2nd Stage ○ 3rd Stage ○ 4th Stage ○ Cooling

1st Stage ○ 2nd Stage ○ 3rd Stage ○ 4th Stage ○ Heating

Digital Display

Lead Unit ○ Unit #1 ○ Unit #2

○ Dehumid. Operation

On / Off

Program

Advance / Change / Save

Comfort

Alarms

Alarm boards are optional and can be factory or field installed. See inside of controller for any alarm functions.

AB3000-B Alarm Board Functions

- Power Loss Sys. 1 ○
- Power Loss Sys. 2 ○
- Refrig. Alarm Sys. 1 ○
- Refrig. Alarm Sys. 2 ○
- Fire/Smoke Alarm ○
- Low Temp. Alarm ○
- High Temp. Alarm 1 ○
- High Temp. Alarm 2 ○
- Lead/Lag Controller Failure Alarm ○

AB3000-A Alarm Board Functions

Programming Instructions

To swap lead and lag unit positions press the ADVANCE button.

To enter the Program mode, press the PROGRAM button and release it when the message PROG, appears on the display. When in Program mode the DOWN and UP arrows are used to scroll through the programming steps.

A FLASHING display means that the function or choice is "SET", and the display will alternate between the step function and setting.

To change the setting of any step press the CHANGE button and the display will stop flashing, allowing change to the setting by using the DOWN or UP arrows. When desired setting is reached press the SAVE button, and proceed as desired. When done with programming changes press the PROGRAM button until display stops flashing and room temperature display is shown. If no buttons are pushed within 30-seconds the controller will automatically revert back to "RUN" mode.

Comfort Mode

Press COMFORT button once to reset to 72°F/22°C Cooling and 68°F/20°C Heating for 1-hour. Display will flash 72 (or 22) during override period. Press 2nd time to cancel during override if desired, or will automatically revert after 1-hour.

Programming Display Menu

Refer to Installation Instructions for complete details.

Loc	Temperature at local (main) Sensor ○
r1	Temperature at Remote 1 sensor location*
r2	Temperature at Remote 2 sensor location*
dEG	Degrees shown in F or C (F or C, Default is F)
SP	Cooling setpoint temperature (65 to 90 deg. F or 18 to 32 deg. C, Default is 75F/24C)
db	Deadband between cooling and heating setpoint (2 to 20 deg. F or 1 to 11 deg. C, Default is 10F/5C)
LLCO	Lead-lag-change-over time (1 to 30 days or 0 for disabled, Default is 7)
HP	Heat Pump Logic Enabled (Yes or No, Default is No)
Econ	Economizer Logic Enabled (Yes or No , Default is No)

* If installed. If sensors are not installed, no display is shown. See label inside cover for sensor logic.

HuLE	Dehumidification Logic Enabled (Yes or No, Default is No) ○
cFAn	Continuous blower operation (None, Lead, Both, Default is lead)
CbdS	System 1 & 2 blowers run if delta T > 5F between sensors (Yes or No, Default is Yes)
OFdE	3 min. lead unit & 4 min. lag unit off-delay enabled (Yes or No, Default is No)
crun	Minimum 3 minute compressor run time enabled (Yes or No, Default is No)
CHYS	Increase compressor Turn On/Turn Off differential with excessive compressor cycling (Yes or No, Default is Yes)
The next 3 parameters are accessible only if an alarm board is installed	
LoAL	Low temperature alarm setpoint (28 to 65 deg. F or -2 to 18 deg. C, Default is 50F/10C)
HAL1	High temperature alarm level 1 setpoint (70 to 99 deg. F or 21 to 37 deg. C, Default is 85F/24C)
HAL2	High temperature alarm level 2 setpoint (70 to 99 deg. F or 21 to 37 deg. C, Default is 90F/32C)
Locd	Controller is locked and no changes can be made. Consult building authority.

FIGURE 8
PARTS LIST DESCRIPTION DIAGRAM

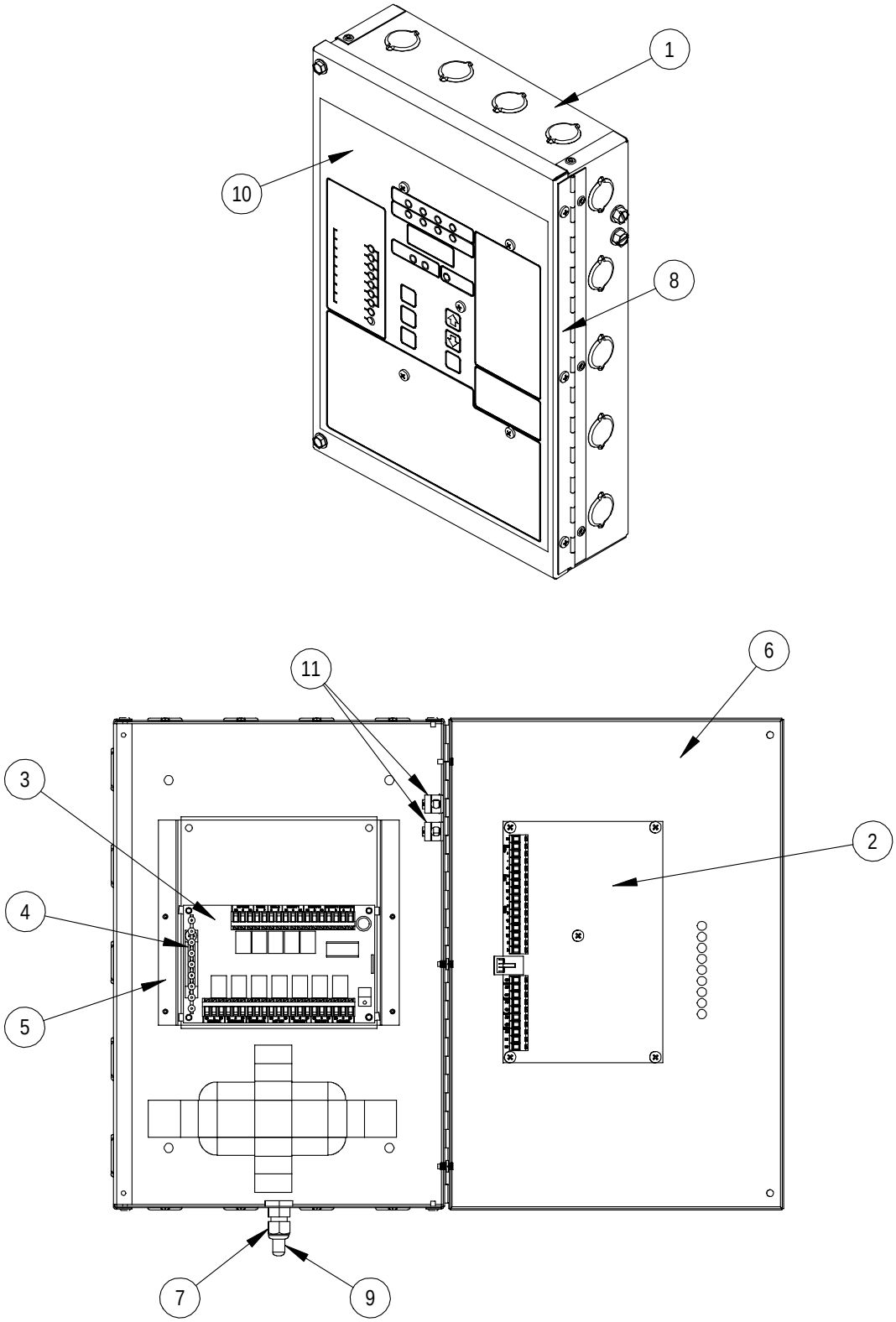

SEXP-445 B

Parts List

Dwg. No.	Part No.	Description	MC3000	MC3000-A	MC3000-B	AB3000-A	AB3000-B
1	127-343-4	Control Box	X	X	X		
2	8612-019	Controller Board	X	X	X		
3	8612-020	Alarm Board A		X		X	
3	8612-021	Alarm Board B			X		X
4	8612-022	Alarm Display		X	X	X	X
5	113-340-4	Support Bracket	X	X	X		
6	152-385-4	Control Box Door	X	X	X		
7	8611-099	LTF Fitting	X	X	X		
8	5400-002	Hinge	X	X	X		
9	8612-023	Sensor	X	X	X		
10	7961-636	Label/Keypad	X	X	X		
11	8611-006	Ground Lug	2	2	2		

This page has been left blank intentionally.

This page has been left blank intentionally.