INSTALLATION INSTRUCTIONS

WALL MOUNT ENERGY RECOVERY VENTILATOR WITH EXHAUST AND OUTDOOR AIR SHUT-OFF DAMPER

Models:

CHERV-A5 CHERV-C5

For Use with Bard 3 Through 5 Ton
Wall Mount CH Heat Pumps

Bard®
SINCE 1914
Climate Control Solutions

Bard Manufacturing Company, Inc.
Bryan, Ohio 43506

www.bardhvac.com

Manual : 2100-477D
Supersedes: 2100-477C
Date: 2-12-20

CONTENTS

Model Nomenclature Legend 3
Electrical Specifications 3
General Description 3
General Information 3
Unpacking 3
Performance and Application Data 4
Basic Installation (Field Installation) 5
Basic Installation (Factory-Installed Versions) 14
Control Wiring 14
Ventilation Airflow 14
Energy Recovery Ventilator Maintenance 18
Maintenance Procedures 18
Annual Maintenance 19

Figures

Figure 1 Remove Blower Assembly 6
Figure 2 Remove Access Panels 7
Figure 3 Remove Air Filter and Exhaust Cover 8
Figure 4 Install Exhaust Blower Assembly..... 9
Figure 5 Plug Blower in Control Panel 10
Figure 6 Connect Leads to Terminals 11
Figure 7 Attach Hood and Replace Access Panel 12
Figure 8 Airflow Diagram 13
Figure 8A Speed Tap Label 13
Figure 9 Heat Pump Wiring Diagram 15
Figure 10 Heat Pump Wiring w/CO_2 Controller 16
Figure 11 Belt Replacement Instructions 18
Figure 12 Hub Assembly with Ball Bearing..... 19

Table

Table 1 Ventilation Air 14

MODEL NOMENCLATURE LEGEND

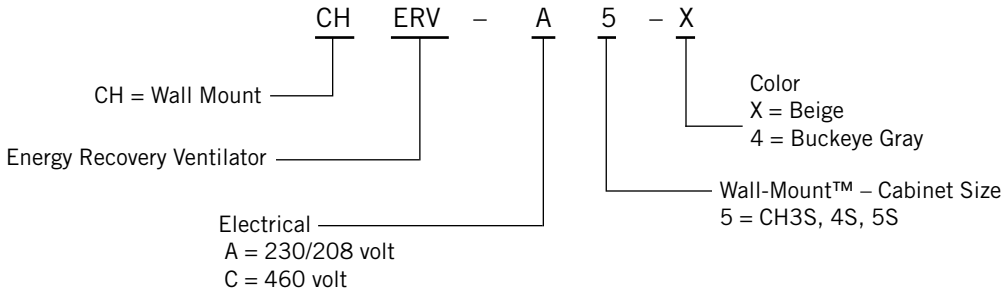

ELECTRICAL SPECIFICATIONS

Model	Voltage	Amps	Control Voltage
CHERV-A5	230/208	2.2	24V
CHERV-C5	460	1.2	24V

GENERAL DESCRIPTION

The Wall Mount Energy Recovery Ventilator (ERV) is designed to provide energy efficient, cost effective ventilation to meet IAQ (indoor air quality) requirements while still maintaining good indoor comfort and humidity control for a variety of applications such as schools, classrooms, lounges, conference rooms, beauty salons and others. It provides a constant supply of fresh air for control of airborne pollutants including CO_2, smoke, radon, formaldehyde, excess moisture, virus and bacteria.

The ventilator incorporates patented rotary heat exchanger technology to remove both heat and moisture.

It is designed as a single package which can be easily factory- or field-installed for new installations or retrofit to the Bard CH series wall mounted units. The package consists of a unique rotary Energy Recovery Cassette that can be easily removed for cleaning or maintenance. The CHERV-*5 has two 15" diameter heat transfer wheels for efficient heat transfer. The heat transfer wheels use a permanently bonded dry desiccant coating for total heat recovery. An outdoor air shutoff damper is an integral feature of the CHERV and prevents infiltration when the ERV is turned off.

Ventilation is accomplished with two blower/motor assemblies each consisting of a drive motor and dual blowers for maximum ventilation at low sound levels. The intake and exhaust blowers can be operated at the same speed (airflow rate) or different speeds to allow flexibility in maintaining desired building pressurization conditions. Factory shipped on medium intake and low exhaust. See Figure 8A to change speeds. The rotating energy wheels provide the heat transfer effectively during both summer and winter conditions. Provides required ventilation to meet the requirements of ASHRAE 62.1 standard.

NOTE: *During operation below 5°F outdoor temperature, freezing of moisture in the heat transfer wheel can occur. Consult the factory if this possibility exists.*

GENERAL INFORMATION

NOTE: *This manual covers both factory- and field-installed CHERV assemblies. For factory-installed CHERV, skip information pertaining to installation of the CHERV system.*

The ventilator should only be installed by a trained heating and air conditioning technician. These instructions serve as a guide to the technician installing the ventilator package. They are not intended to be a step-by-step procedure with which the mechanically inclined owner can install the package. The ventilator housing is shipped in one carton which contains the following:

1. Energy Recovery Ventilator
2. Service Door
3. Rain Hood and Mist Eliminator
4. Installation Instructions

UNPACKING

Upon receipt of the equipment, be sure to compare the model number found on the shipping label with the accessory identification information on the ordering and shipping document to verify that the correct accessory has been shipped.

Inspect the carton housing of each ventilator as it is received, and before signing the freight bill, verify that all items have been received and that there is no visible damage. Note any shortages or damage on all copies of the freight bill. The receiving party must contact the last carrier immediately, preferably in writing, requesting inspection by the carrier's agent. Concealed damage not discovered until after loading must be reported to the carrier within 15 days of its receipt.

PERFORMANCE AND APPLICATION DATA – CHERV-*5

Summer Cooling Performance
(Indoor Design Conditions 75°DB/62°WB)

Ambient OD		Ventilation Rate 450 CFM						Ventilation Rate 375 CFM						Ventilation Rate 300 CFM					
DB/ WB	F	VLT	VLS	VLL	HRT	HRS	HRL	VLT	VLS	VLL	HRT	HRS	HRL	VLT	VLS	VLL	HRT	HRS	HRL
105	75	21465	14580	6884	13952	9477	4475	17887	12150	5737	11805	8018	3786	14310	9720	4590	9587	6512	3075
	70	14580	14580	0	9477	9477	0	12150	12150	0	8018	8018	0	9720	9720	0	6512	6512	0
	65	14580	14580	0	9477	9477	0	12150	12150	0	8018	8018	0	9720	9720	0	6512	6512	0
100	80	31590	12150	19440	20533	7897	12635	26325	10125	16200	17374	6682	10692	21060	8100	12960	14110	5427	8683
	75	21465	12150	9314	13952	7897	6054	17887	10125	7762	11805	6682	5123	14310	8100	6210	9587	5427	4160
	70	12352	12150	202	8029	7897	131	10293	10125	168	6793	6682	111	8235	8100	135	5517	5427	90
	65	12150	12150	0	7897	7897	0	10125	10125	0	6682	6682	0	8100	8100	0	5427	5427	0
	60	12150	12150	0	7897	7897	0	10125	10125	0	6682	6682	0	8100	8100	0	5427	5427	0
95	80	31590	9720	21870	20553	6318	14215	26325	8100	18225	17374	5345	12028	21060	6480	14580	14110	4341	9768
	75	21465	9720	11744	13952	6318	7634	17887	8100	9787	11805	5345	6459	14310	6480	7830	9587	4341	5246
	70	12352	9720	2632	8029	6318	1711	10293	8100	2193	6793	5345	1447	8235	6480	1755	5517	4341	1175
	65	9720	9720	0	6318	6318	0	8100	8100	0	5345	5345	0	6480	6480	0	4341	4341	0
	60	9720	9720	0	6318	6318	0	8100	8100	0	5345	5345	0	6480	6480	0	4341	4341	0
90	80	31590	7290	24300	20533	4738	15794	26325	6075	20250	17374	4009	13365	21060	4860	16200	14110	3256	10854
	75	21465	7290	14175	13952	4738	9213	17887	6075	11812	11805	4009	7796	14310	4860	9450	9587	3256	6331
	70	12352	7290	5062	8029	4738	3290	10293	6075	4218	6793	4009	2784	8235	4860	3375	5517	3256	2261
	65	7290	7290	0	4738	4738	0	6075	6075	0	4009	4009	0	4860	4860	0	3256	3256	0
	60	7290	7290	0	4738	4738	0	6075	6075	0	4009	4009	0	4860	4860	0	3256	3256	0
85	80	31590	4860	26730	20533	3159	17374	26325	4050	22275	17374	2672	14701	21060	3240	17820	14110	2170	11939
	75	21465	4860	16605	13952	3159	10793	17887	4050	13837	11805	2672	9132	14310	3240	11070	9587	2170	7416
	70	12352	4860	7492	8029	3159	4870	10293	4050	6243	6793	2672	4120	8235	3240	4995	5517	2170	3346
	65	4860	4860	0	3159	3159	0	4050	4050	0	2672	2672	0	3240	3240	0	2170	2170	0
	60	4860	4860	0	3159	3159	0	4050	4050	0	2672	2672	0	3240	3240	0	2170	2170	0
80	75	21465	2430	19035	13952	1579	12372	17887	2025	15862	11805	1336	10469	14310	1620	12690	9587	1085	8502
	70	12352	2430	9922	8029	1579	6449	10293	2025	8268	6793	1336	5457	8235	1620	6615	5517	1085	4432
	65	4252	2430	1822	2764	1579	1184	3543	2025	1518	2338	1336	1002	2835	1620	1215	1899	1085	814
	60	2430	2430	0	1579	1579	0	2025	2025	0	1336	1336	0	1620	1620	0	1085	1085	0
75	70	12352	0	12352	8029	0	8029	10293	0	10293	6793	0	6793	8235	0	8235	5517	0	5517
	65	4252	0	4252	2764	0	2764	3543	0	3543	2338	0	2338	2835	0	2835	1899	0	1899
	60	0	0	0	0	0	0	0	0	0	0	0	0	0	0	0	0	0	0

Winter Heating Performance
(Indoor Design Conditions 70°F DB)

Ambient OD	Ventilation Rate					
	450 CFM		375 CFM		300 CFM	
DB/°F	WVL	WHR	WVL	WHR	WVL	WHR
65	2430	1944	2025	1640	1620	1328
60	4860	3888	4050	3280	3240	2656
55	7290	5832	6075	4920	4860	3985
50	9720	7776	8100	6561	6480	5313
45	12150	9720	10125	8201	8100	6642
40	14580	11664	12150	9841	9720	7970
35	17010	13608	14175	11481	11340	9298
30	19440	15552	16200	13122	12960	10627
25	21870	17496	18225	14762	14580	11955
20	24300	19440	20250	16402	16200	13284
15	26730	21384	22275	18042	17820	14612

NOTE: *Sensible performance only is shown for winter application.*

LEGEND:

VLT = Ventilation Load – Total
VLS = Ventilation Load – Sensible
VLL = Ventilation Load – Latent
HRT = Heat Recovery – Total
HRS = Heat Recovery – Sensible
HRL = Heat Recovery – Latent
WVL = Winter Ventilation Load
WHR = Winter Heat Recovery

NOTE: *All performance data is based on operating intake and exhaust blower on the same speed.*

BASIC INSTALLATION (FIELD INSTALLATION)

1. Unpack the ventilator assembly which includes the integral ventilator with attached electrical harness and miscellaneous hardware.

⚠ WARNING

Open and lock unit disconnect switch before installing this accessory to prevent injury or death due to electrical shock or contact with moving parts. Turn thermostat to OFF.

Model	For Use with the Following Units	Electrical
CHERV-A5	CH3S1-A, -B CH4S1-A, -B CH5S1-A, -B	230/208 1 or 3 Phase
CHERV-C5	CH3S1-C CH4S1-C CH5S1-C	460 3 Phase

⚠ CAUTION

Be sure the correct model and voltage Energy Recovery Ventilator is used with the correct air conditioner or heat pump to insure correct voltage compatibility.

2. Remove exhaust blower assembly from back of ventilator and discard shipping plate (see Figure 1).
3. Remove the existing exterior filter access and service access panels on the Bard wall mount unit. Save the filter access panel and discard service access panel (see Figure 2).
4. Remove and save existing unit air filter. Remove and discard the exhaust cover plate and remove center screw from condenser grille (see Figure 3).
5. Install exhaust blower assembly in exhaust opening and secure with four (4) screws. Position 4-pin connector so it is accessible (see Figure 4).
6. Install ventilator into the unit to the left side. Once the ventilator is fully inserted, slide the ventilator to the right until it is tight against the back of the control panel (see Figure 5).

IMPORTANT NOTE: *Position front lip of ventilator over front grille and on top of condenser partition as shown in Figure 5 inset. This is important to ensure proper drainage of any water entering damper assembly.*

7. Remove access panel and plug in exhaust blower. Replace access panel.
8. Open control panel to gain access to unit low voltage terminal block. **Confirm all power is OFF prior to opening the control panel.**
9. Route electrical harness leads through the 7/8" bushing in control panel (Figure 5) into low voltage box.
10. Connect black lead with fork terminal to terminal strip terminal C, orange lead to terminal G and brown with white stripe to terminal “O1”. Connect yellow jumper from “O1” to G if the thermostat does not have an “A1” terminal or other terminal for occupied mode. Connect red lead to R. (See Figure 6 and wiring diagram.)

NOTE: *These 24 volt control wires control the starting and stopping of the Energy Recovery Ventilator and can be independently controlled by an energy management control or timer. See* **CONTROL WIRING** *on page 14 for suggested control schemes.*

11. Remove female plug of high voltage wiring harness from the heat recover assembly and snap into unit control panel. Wire to terminal block. (See Figure 6 and wiring diagram.)
12. Plug male plug from female at side of control panel (see Figure 5).
13. Close control panel cover.
14. Replace filter and one (1) screw in condenser grille (see Figure 3).
15. Ventilator checkout:
    A. Resupply power to unit.
    B. Energize the evaporator blower by switching thermostat to the manual fan position with Heat/Cool in OFF position.
    C. Ventilator heat transfer wheels should rotate slowly (49 RPM). Intake and exhaust blowers should run. (See Figure 8.)
    D. De-energize the evaporator blower. Energy Recovery wheels and fresh air and exhaust air blowers should stop.
    E. This completes ventilator checkout.
16. See section on Recommended Control Sequences for permanent connection of the orange control wire that was connected to G for checkout.
17. Re-install the blower access panel at top of unit and secure with sheet metal screws (see Figure 2).

18. Replace the lower service access panel with the new panel provided. Attach air intake hood with screws provided (see Figure 7). Be sure to insert the top flange of the air intake hood into and through the slot in the service door and between the door and insulation to prevent bowing of the door.

19. Apply Certification label, included with Installation Instructions, next to unit Serial Plate.

20. Ventilator is now ready for operation.

FIGURE 1
Remove Blower Assembly and Discard Shipping Plate

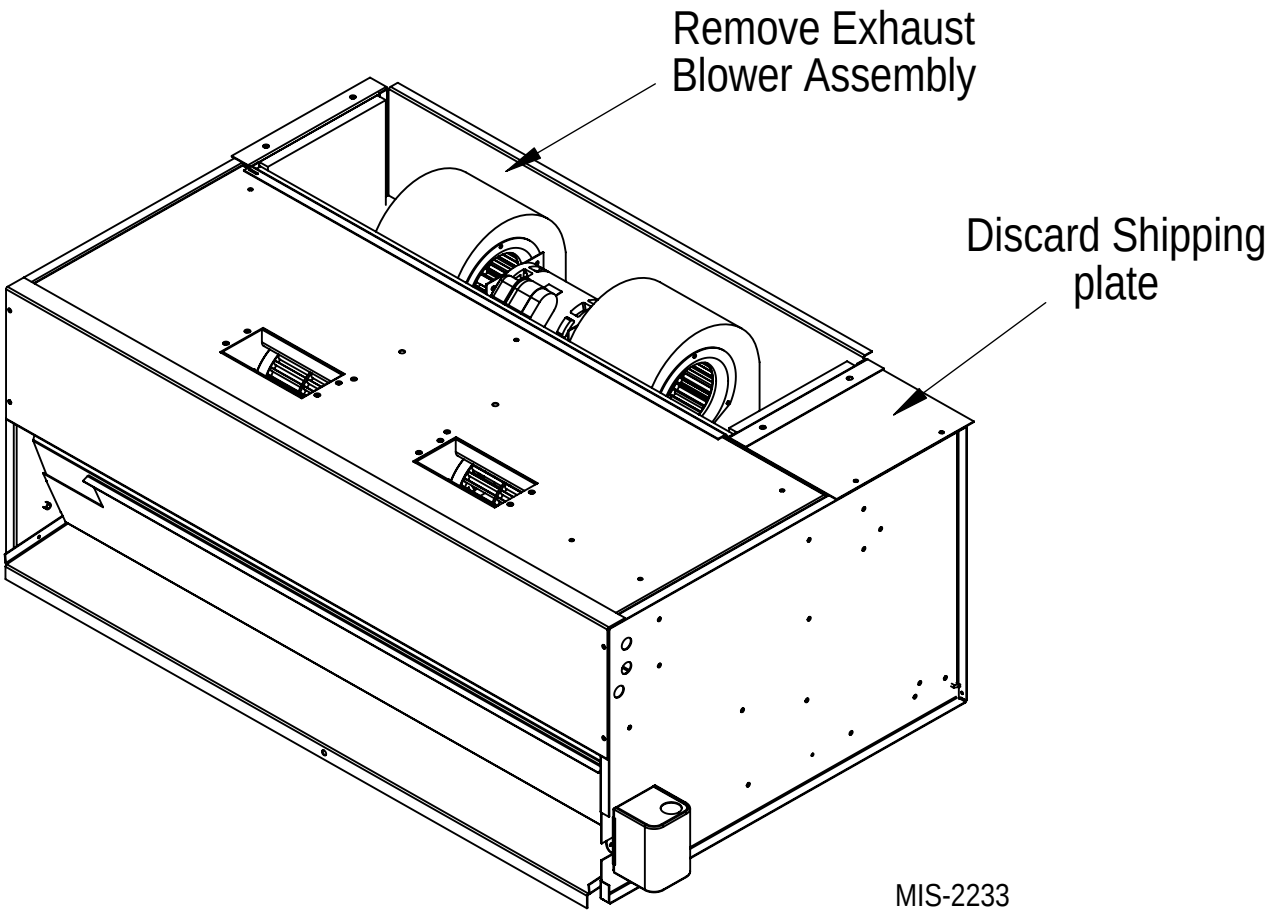

FIGURE 2
Remove Access Panels

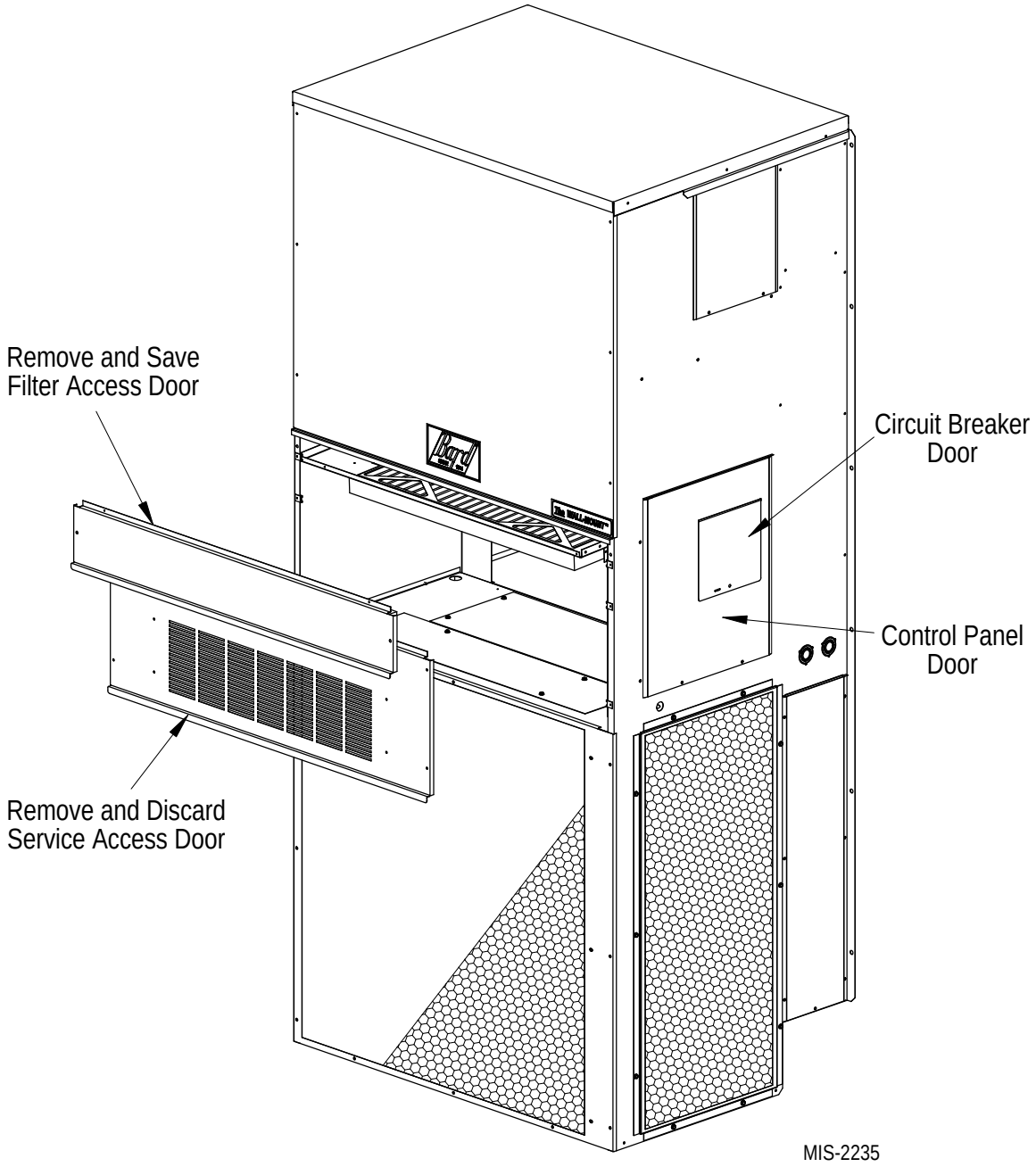

FIGURE 3
Remove Air Filter and Exhaust Cover Plate

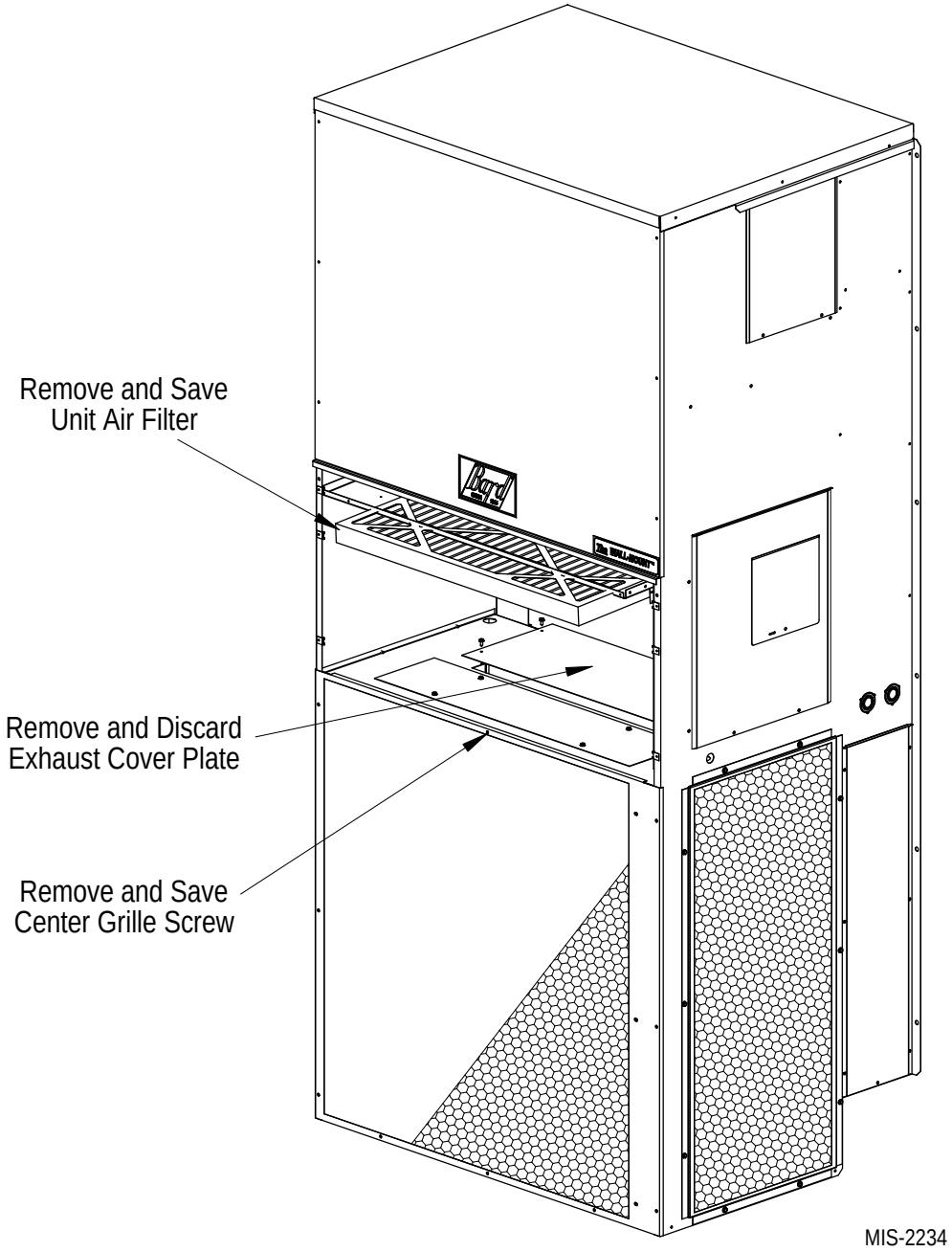

FIGURE 4
Install Exhaust Blower Assembly

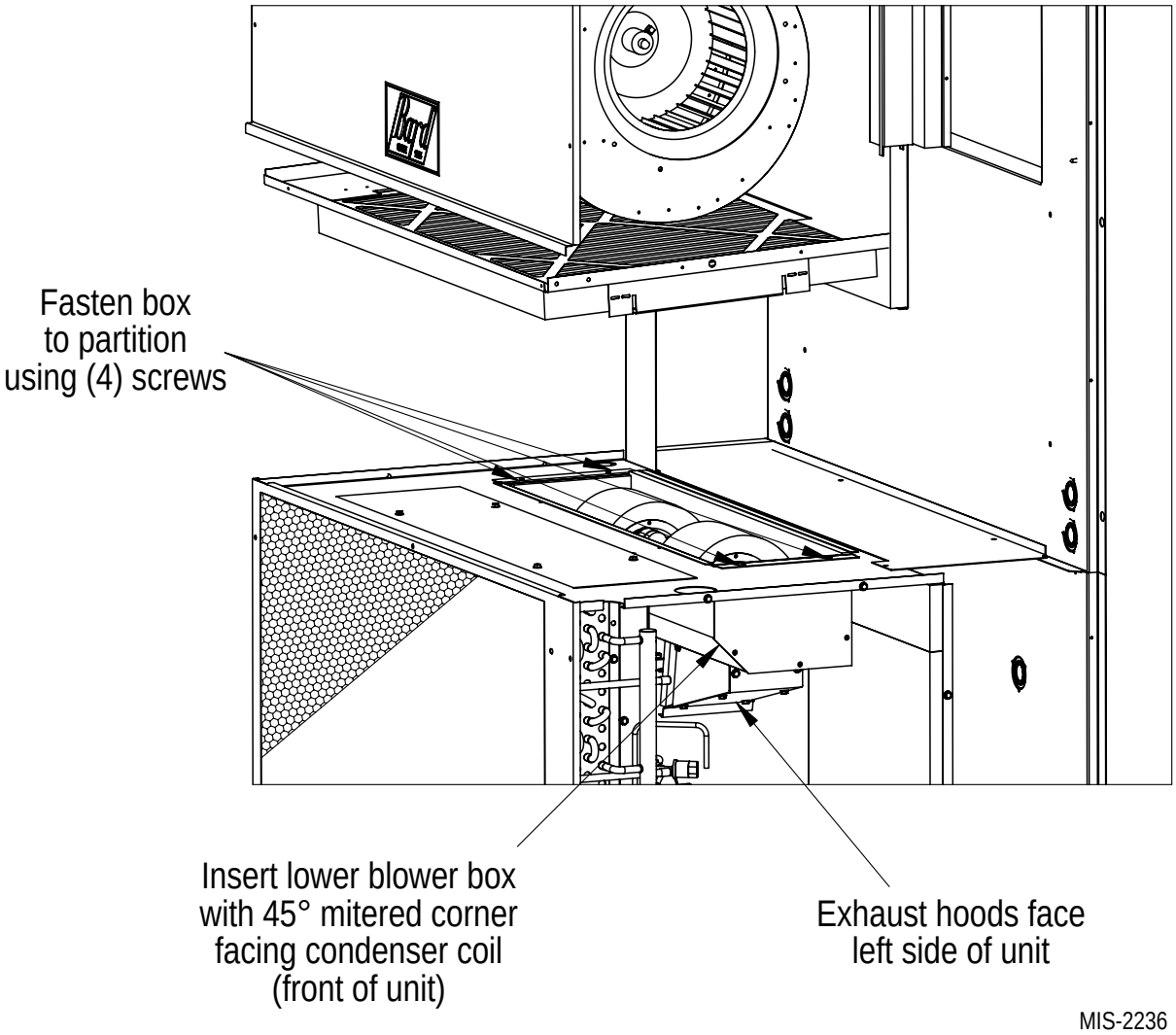

FIGURE 5
Plug Exhaust Blower into Control Panel

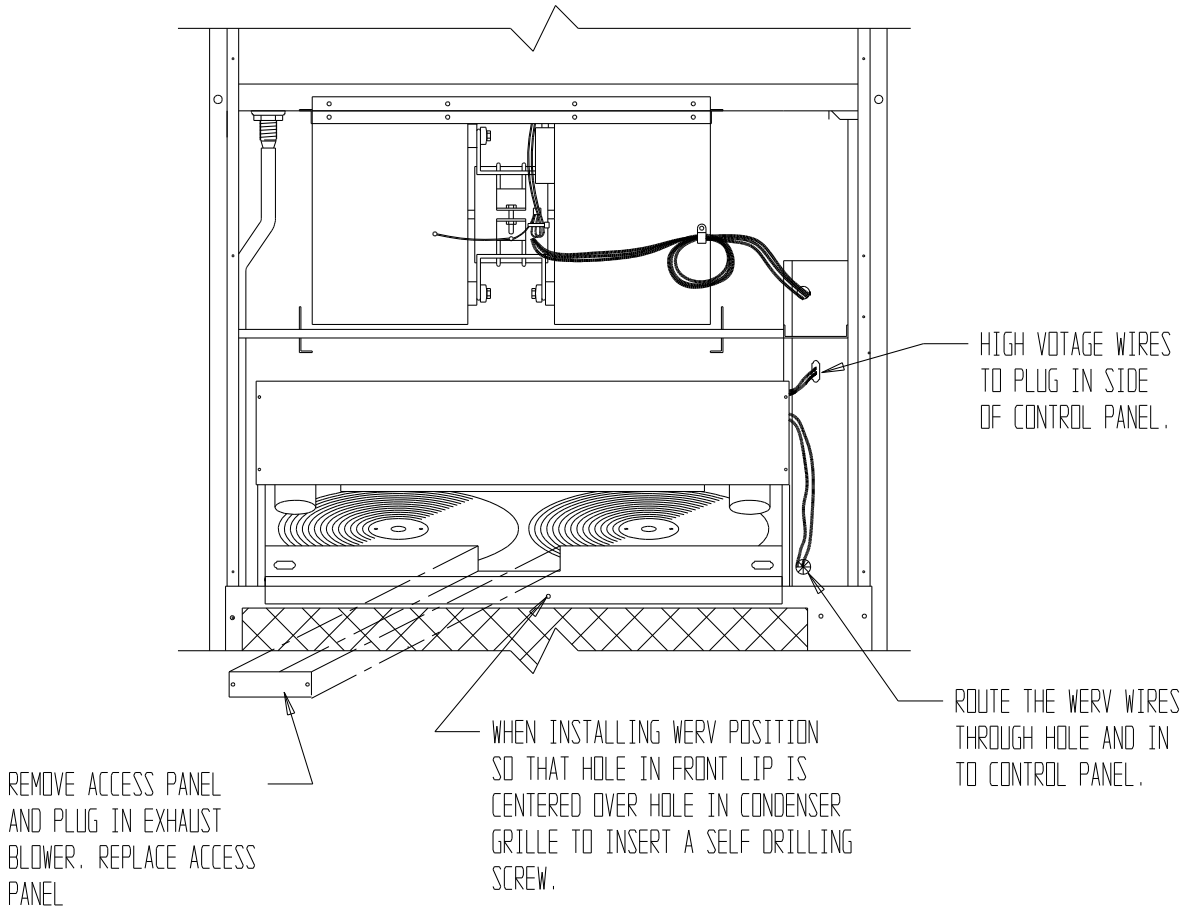

CAUTION: HOLE IN WERV MUST BE USED TO INSURE CLEARANCE FROM CONDENSER COIL TUBING.

FIGURE 5 (INSET)

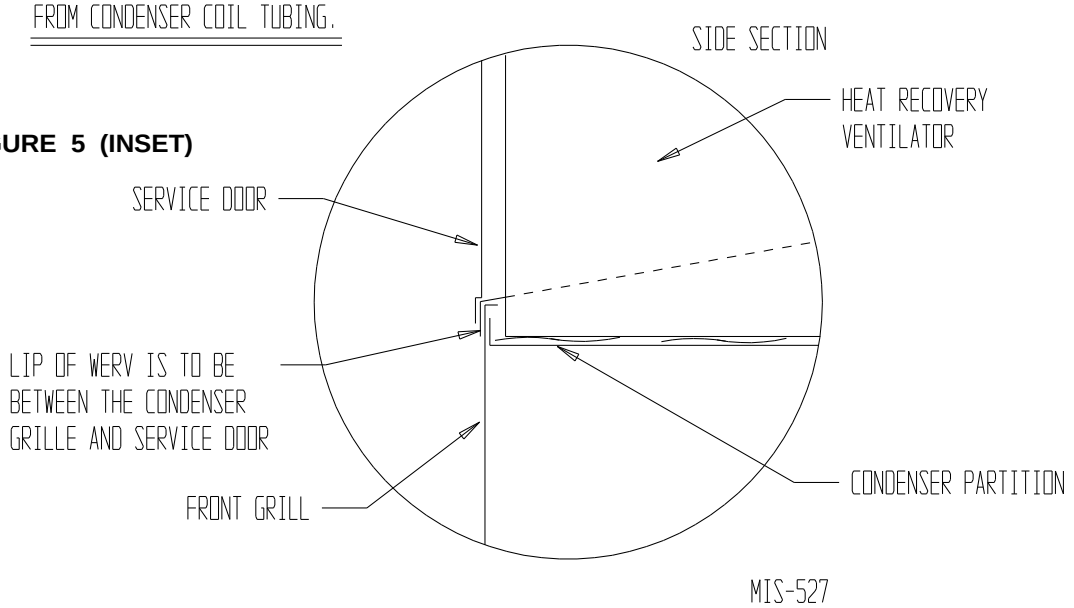

FIGURE 6
Connect Leads to Terminals

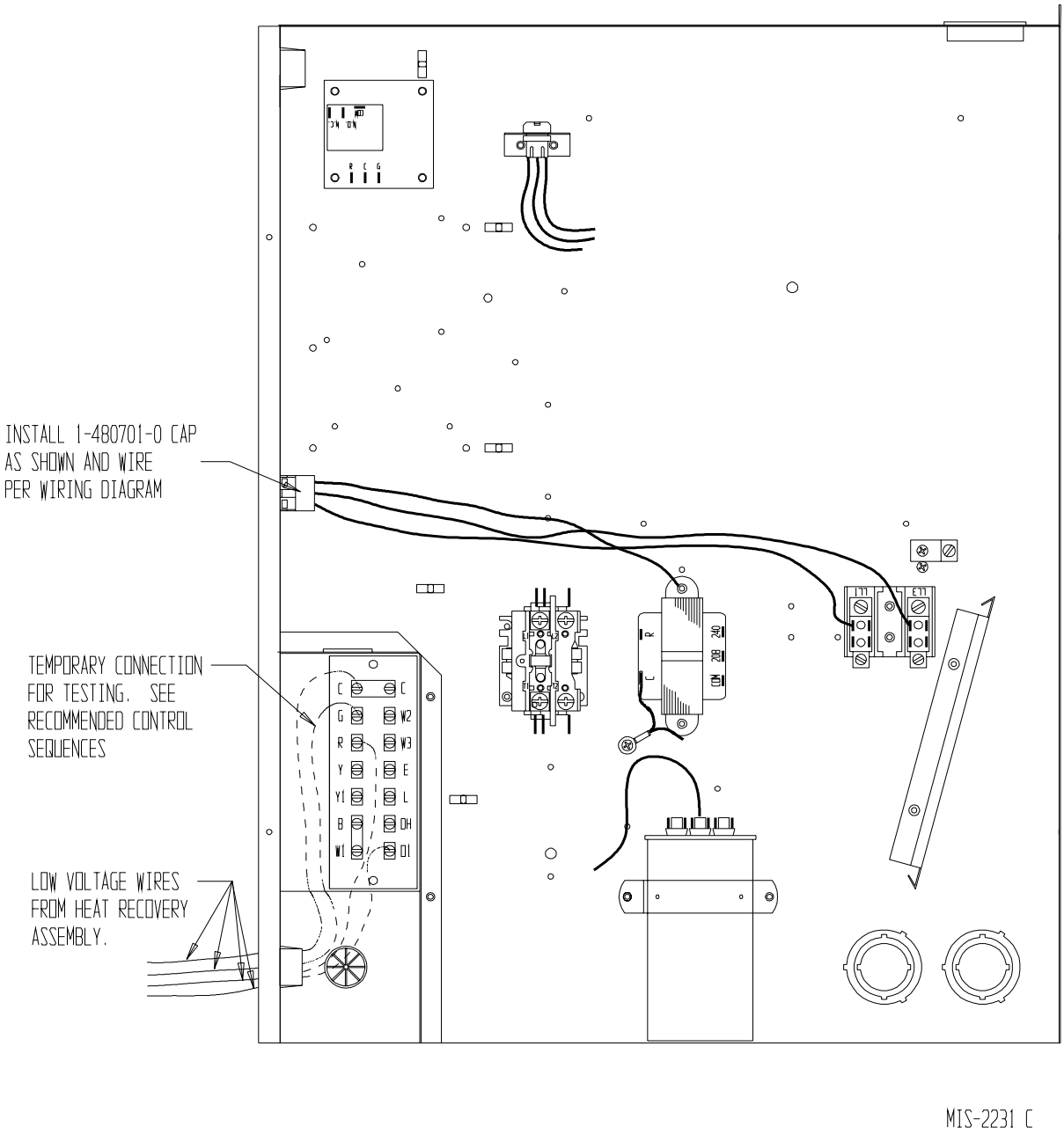

FIGURE 7
Attach Hood and Replace Access Panel

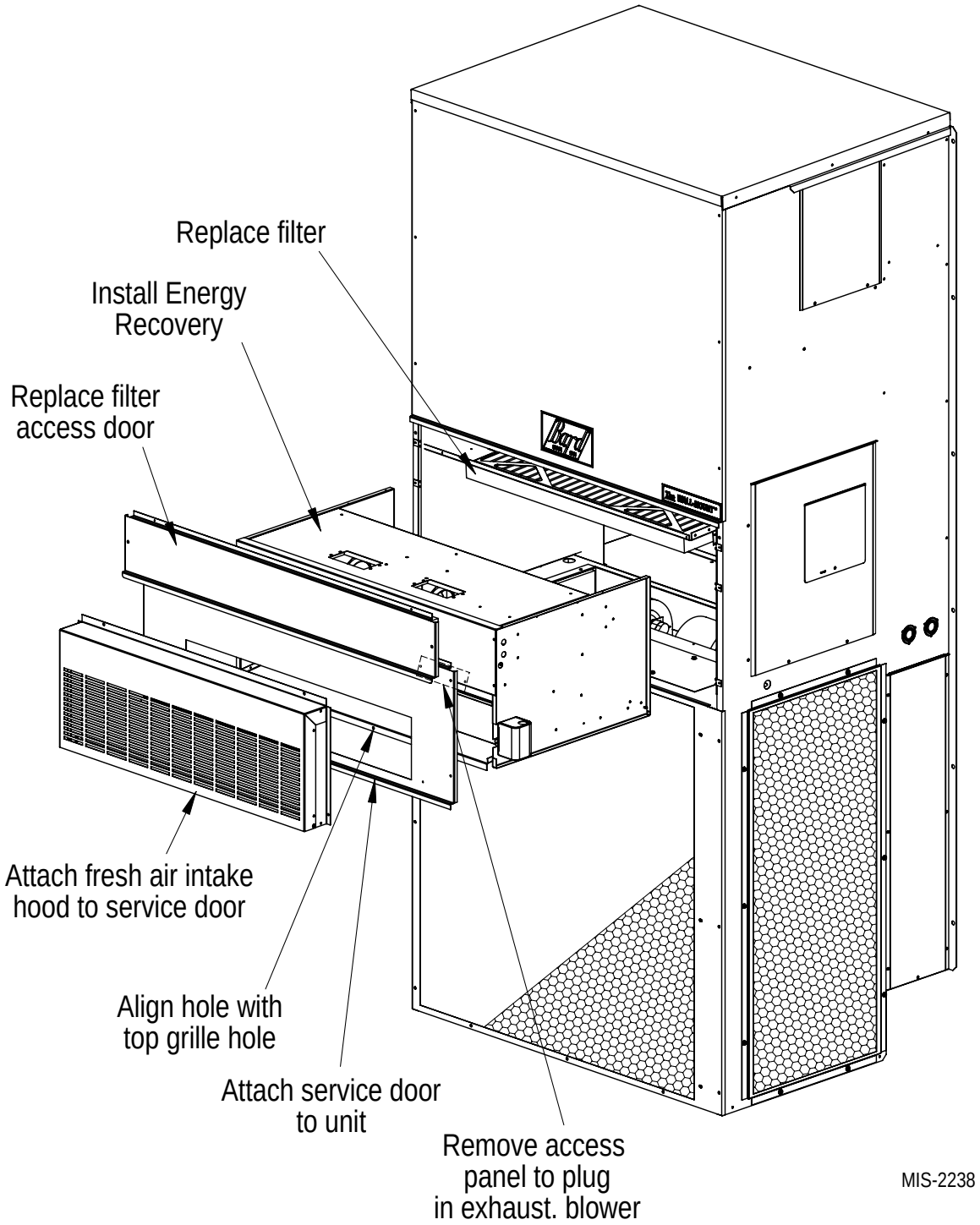

FIGURE 8
Airflow Diagram

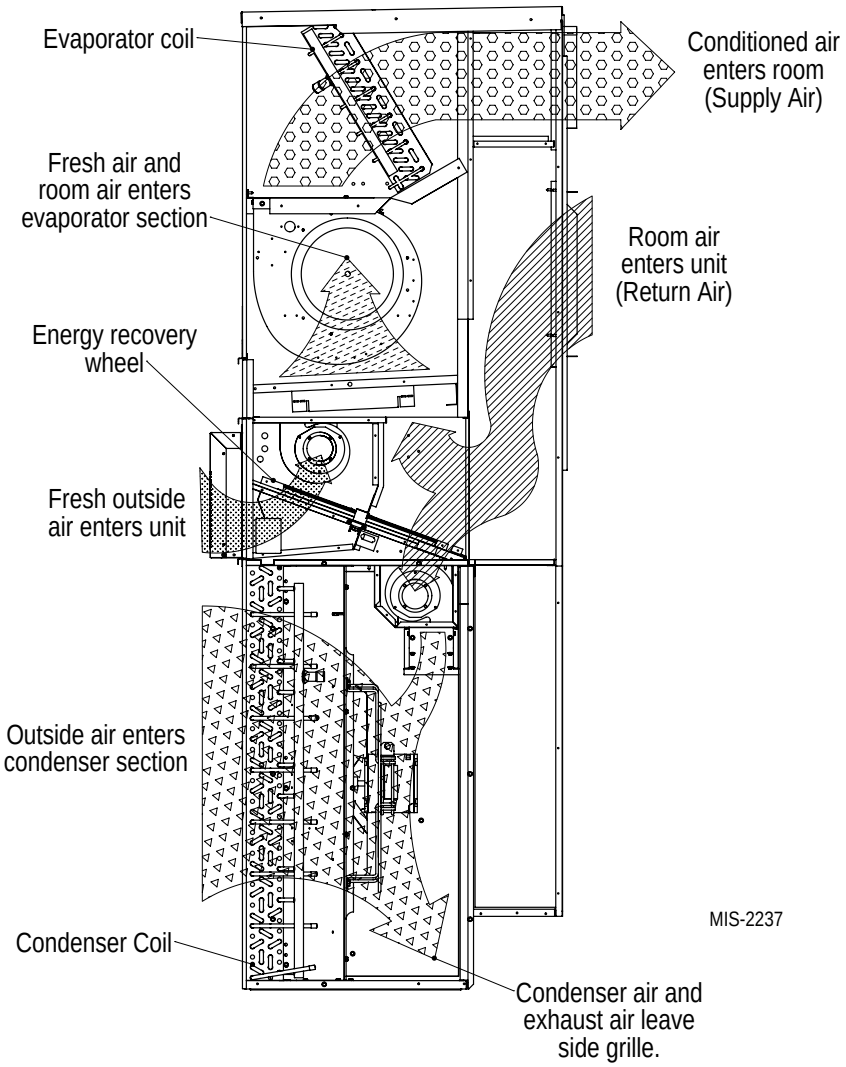

FIGURE 8A

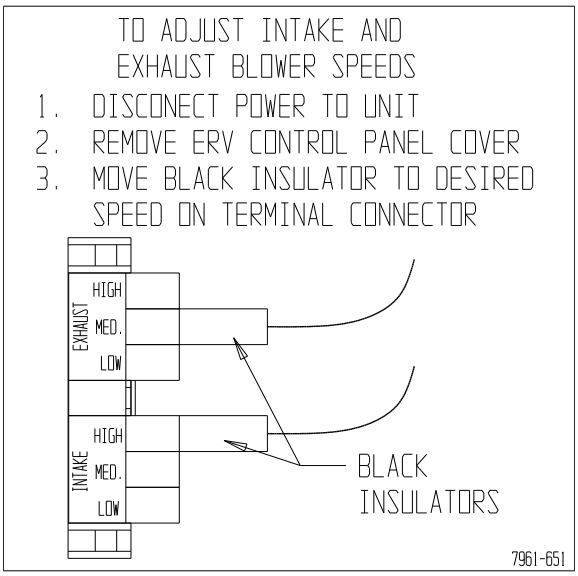

MIS-2120

BASIC INSTALLATION (FACTORY-INSTALLED VERSIONS)

1. Remove blower access door and service door. Room filter located above air circulation blower. Install filter.
2. Remove and install air intake hood. Refer to Item 16 of **Basic Installation (Field Installation)**.
3. Refer to **Control Wiring** section below for suggested control schemes for the CHERV.
4. After wiring, replace all panels.

CONTROL WIRING

The CHERV comes from the factory with the low voltage control wires wired into the wall mount low voltage terminal strip. Care must be taken when deciding how to control the operation of the ventilator. When designing the control circuit for the ventilator, the following requirements must be met.

Control Requirements

1. Indoor blower motor must be run whenever the CHERV is run.
2. Select the correct motor speed tap in the CHERV. Using Table 1, determine the motor speed needed to get the desired amount of ventilation air needed. For instance, do not use the high speed tap on a CHERV-A5 if only 300 CFM of ventilation air is needed; use the low speed tap. Using the high speed tap would serve no useful purpose and significantly affect the overall efficiency of the air conditioning system. System operating cost would also increase.
3. Run the CHERV only during periods when the conditioned space is occupied. Running the CHERV during unoccupied periods wastes energy, decreases the expected life of the CHERV and can result in a large moisture buildup in the structure. The CHERV removes 60 to 70% of the moisture in the incoming air, not 100% of it. Running the CHERV when the structure is unoccupied allows moisture to build up in the structure because there is little or now cooling load. Thus, the air conditioner is not running enough to remove the excess moisture being brought in. Use a control system that in some way can control the system based on occupancy.

*** * * IMPORTANT * * ***

Operating the CHERV during unoccupied periods can result in a build up of moisture in the structure.

Recommended Control Sequences

Several possible control scenarios are listed below:

1. Use a programmable electronic thermostat with auxiliary terminal to control the CHERV based on daily programmed occupance periods. Bard markets and recommends the Bard Part No. 8403-060 programmable electronic thermostat for air conditioner and heat pump applications (see Figure 9).
2. Use a CO_2 sensor in conjunction with a mechanical thermostat to keep CO_2 at required levels. Bard recommends using Bard CO_2 controller 8403-056 (see Figure 10).
3. Use a motion sensor in conjunction with a mechanical thermostat to determine occupancy in the structure. Bard markets the CS2000A1 for this use (see Figure 11).
4. Use a DDC control system to control the CHERV based on a room occupancy schedule to control the CHERV.
5. Tie the operation of the CHERV into the light switch. The lights in a room are usually on only when occupied.
6. Use a manual timer that the occupants turn to energize the CHERV for a specific number of hours.
7. Use a programmable mechanical timer to energize the CHERV and indoor blower during occupied periods of the day.

VENTILATION AIRFLOW

The CHERV-A5 and CHERV-C5 are equipped with a 3-speed motor to provide the capability of adjusting the ventilation rates to the requirements of the specific application by simply changing motor speeds.

TABLE 1

Ventilation Air (CFM)			
Model	**High Speed (Black)**	**Medium Speed (Blue)**	**Low Speed (Red)**
CHERV-A5 CHERV-C5	450	375	300

⚠ WARNING

Open disconnect to shut all power OFF before doing this. Failure to do so could result in injury or death due to electrical shock.

The units are set from the factory with the exhaust blower on the low speed and the intake blower on medium speed. Moving the speed taps located in the control panel can change the blower speed of the intake and exhaust (see Figure 8A).

FIGURE 9
Heat Pump Wiring

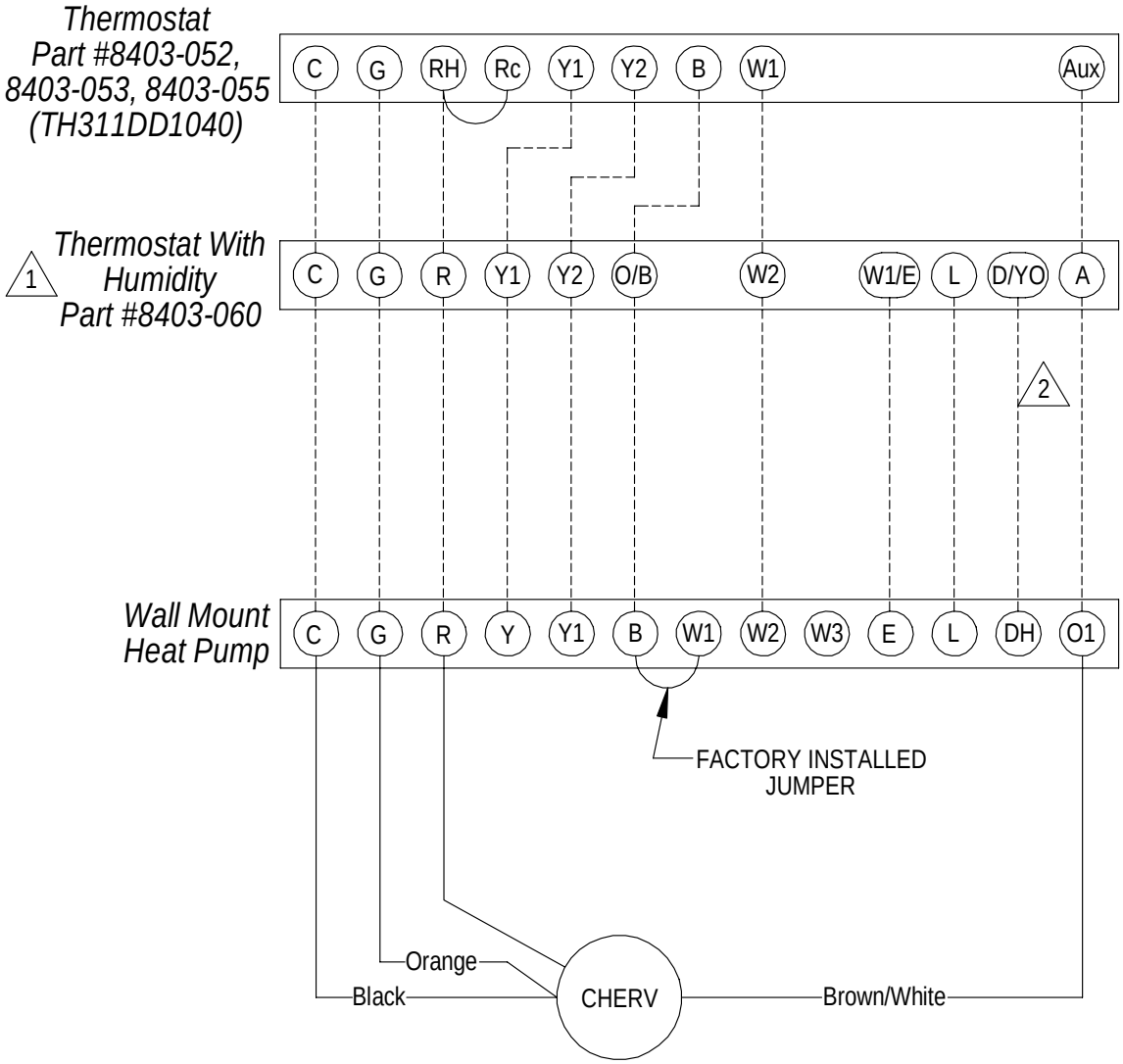

1 PROGRAM THERMOSTAT FOR CONTINUOUS BLOWER DURING OCCUPIED PERIODS

2 ONLY NEEDED IF DEHUMIDIFICATION IS USED

MIS-2792 A

FIGURE 10
Heat Pump Wiring with CO_2 Controller

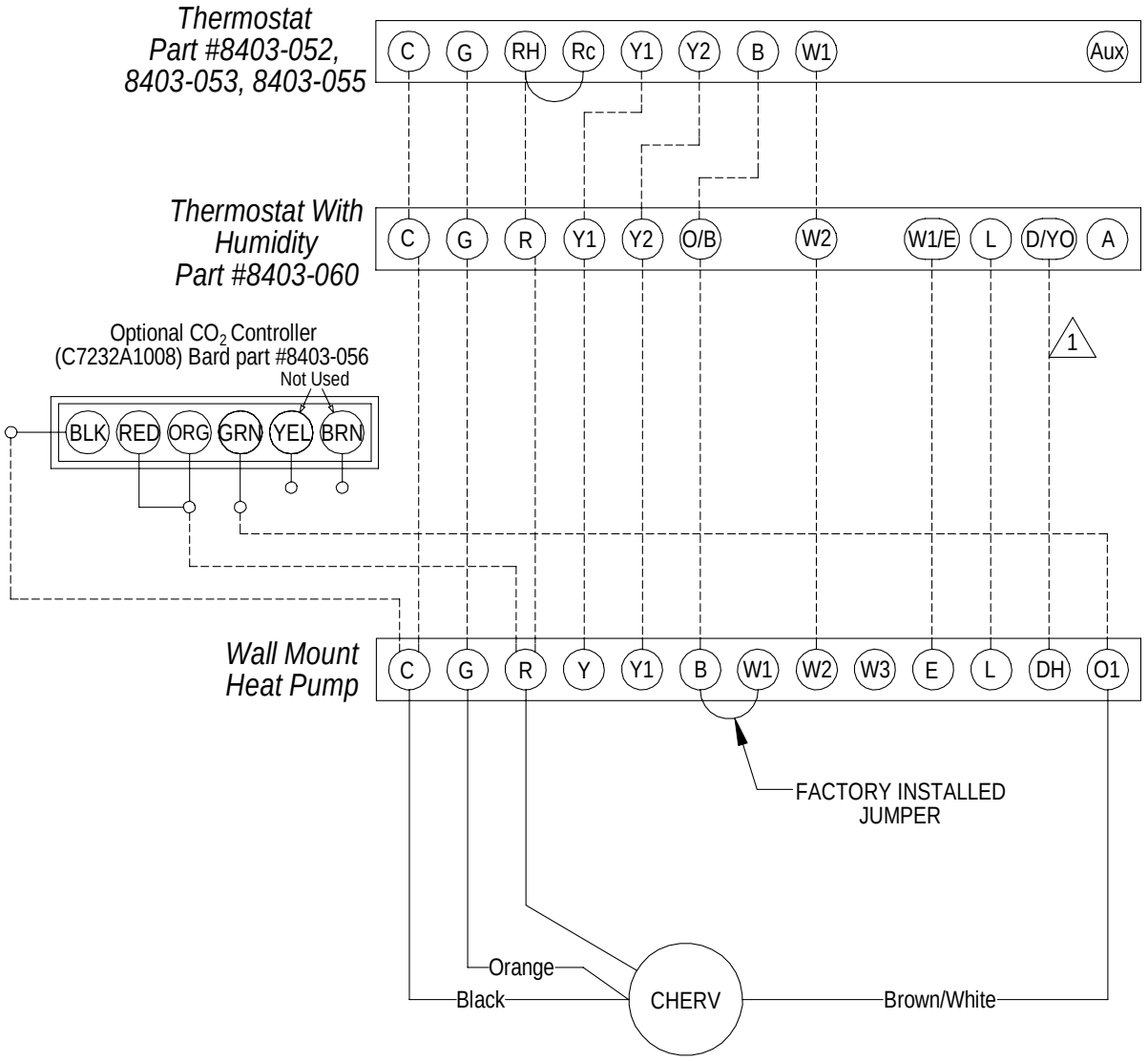

1 ONLY NEEDED IF DEHUMIDIFICATION IS USED

MIS-2793 A

ENERGY RECOVERY VENTILATOR MAINTENANCE

General Information

The ability to clean exposed surfaces within air moving systems is an important design consideration for the maintenance of system performance and air quality. The need for periodic cleaning will be a function of operating schedule, climate and contaminants in the indoor air being exhausted and in the outdoor air being supplied to the building. All components exposed to the airstream, including energy recovery wheels, may require cleaning in most applications.

Rotary counterflow heat exchanges (heat wheels) with laminar airflow are "self-cleaning" with respect to dry particles. Smaller particles pass through; larger particles land on the surface and are blown clear as the flow direction is reversed. For this reason, the primary need for cleaning is to remove films of oil-based aerosols that have condensed on energy transfer surfaces. Buildup of material over time may eventually reduce airflow. Most importantly, in the case of desiccant coated (enthalpy) wheels, such films can close off micron sized pores at the surface of the desiccant material, reducing the efficiency with which the desiccant can absorb and desorb moisture.

Frequency

In a reasonably clean indoor environment such as a school, office building or home, experience shows that reductions of airflow or loss of sensible (temperature) effectiveness may not occur for 10 or more years. However, experience also shows that measurable changes in latent energy (water vapor) transfer can occur in shorter periods of time in commercial, institutional and residential applications experiencing moderate occupant smoking or with cooking facilities. In applications experiencing unusually high levels of occupant smoking, such as smoking lounges, nightclubs, bars and restaurants, washing of energy transfer surfaces, as frequently as every 6 months, may be necessary to maintain latent transfer efficiency. Similar washing cycles may also be appropriate for industrial applications involving the ventilation of high levels of smoke or oil-based aerosols such as those found in welding or machining operations, for example. In these applications, latent efficiency losses of as much as 40% or more may develop over a period of 1 to 3 years.

Cleanability and Performance

In order to maintain energy recovery ventilation systems, energy transfer surfaces must be accessible for washing to remove oils, grease, tars and dirt that can impede performance or generate odors. Washing of the desiccant surfaces is required to remove contaminate buildups that can reduce adsorption of water molecules. The continued ability of an enthalpy wheel to transfer latent energy depends upon the permanence of the bond between the desiccant and the energy transfer surfaces.

Bard wheels feature silica gel desiccant permanently bonded to the heat exchange surface without adhesives; the desiccant will not be lost in the washing process. Proper cleaning of the Bard energy recovery wheel will restore latent effectiveness to near original performance.

Maintenance Procedures

NOTE: *Local conditions can vary and affect the required time between routine maintenance procedures, therefore all sites (or specific units at a site) may not have the same schedule to maintain acceptable performance. The following timetables are recommended and can be altered based on local experience.*

Quarterly Maintenance

1. Inspect mist eliminator/prefilter and clean if necessary. This filter is located in the fresh air intake hood on the front of the unit. This is an aluminum mesh filter and can be cleaned with water and any detergent not harmful to aluminum.
2. Inspect wall mount unit filter and clean or replace as necessary. This filter is located either in the unit, in a return air filter grille assembly, or both. If in the unit, it can be accessed by removing the lower service door on the front of the unit. If in a return air filter grille, hinge the grille open to gain access.
3. Inspect energy recovery ventilator for proper wheel rotation and dirt buildup. This can be done in conjunction with Item 2 above. Energize the energy recovery ventilator after inspecting the filter and observe for proper rotation and/or dirt buildup.
4. Recommended energy recovery wheel cleaning procedures follow: Disconnect all power to unit. Remove the lower service door of the wall mount unit to gain access to the energy recovery ventilator.

5. Remove the front access panel on the ventilator. Unplug amp connectors to cassette motors. Slide energy recovery cassette out of ventilator.
6. Use a shop vacuum with brush attachment to clean both sides of the energy recovery wheels.
7. Reverse shop vacuum to use as a blower and blow out any residual dry debris from the wheel.

NOTE: *Discoloration and staining of the wheel does not affect its performance. Only excessive buildup of foreign material needs to be removed.*

8. If any belt chirping or squealing noise is present, apply a small amount of LPS-1 or equivalent dry film lubricant to the belt.

Annual Maintenance

1. Inspect and conduct the same procedures as outlined under ***Quarterly Maintenance***.
2. To maintain peak latent (moisture) removal capacity, it is recommended that the energy recovery wheels be sprayed with a diluted nonacid based evaporator coil cleaner or alkaline detergent solution such as 409.

NOTE: *Do not use acid-based cleaners, aromatic solvents, temperatures in excess of 170°F or steam. Damage to the wheel may result.*

Do not disassemble and immerse the entire heat wheel in a soaking solution, as bearing and other damage may result.

3. Rinse wheel thoroughly after application of the cleaning solution, and allow to drain before re-installing.
4. No re-lubrication is required to heat wheel bearings of the drive motor, or to the intake and exhaust blower motors.
5. If any belt chirping or squealing noise is present, apply a small amount of LPS-1 or equivalent dry film lubricant to the belt.

FIGURE 11
Belt Replacement Instructions

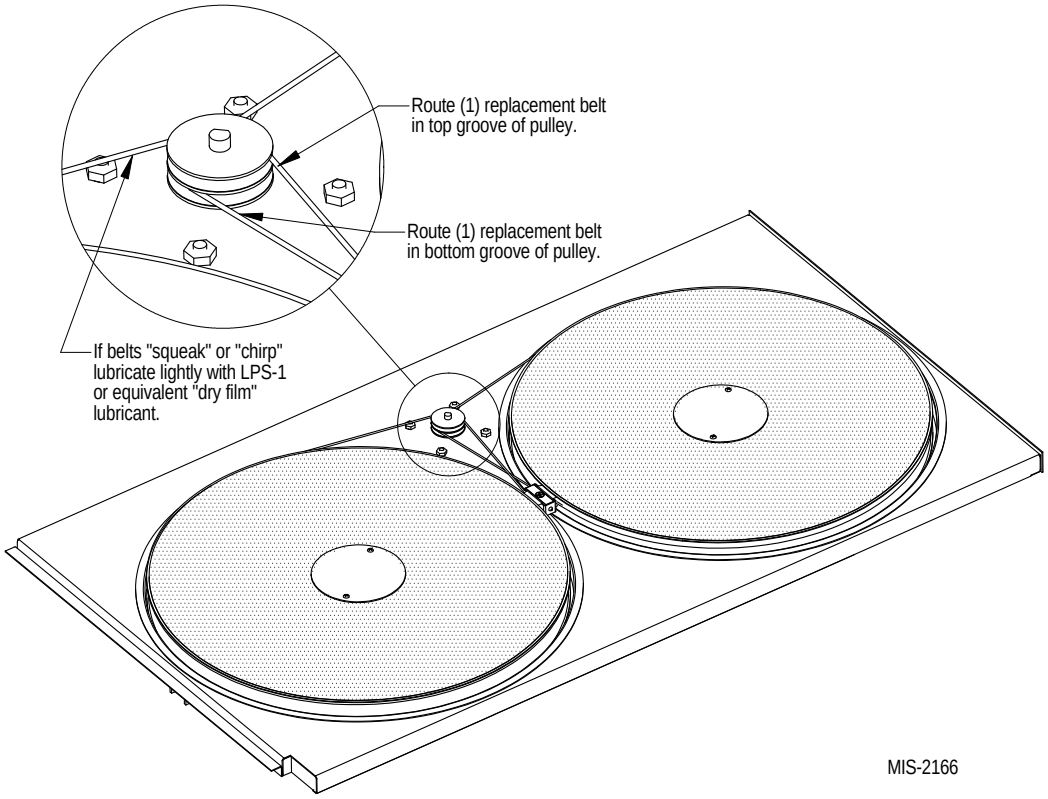

FIGURE 12

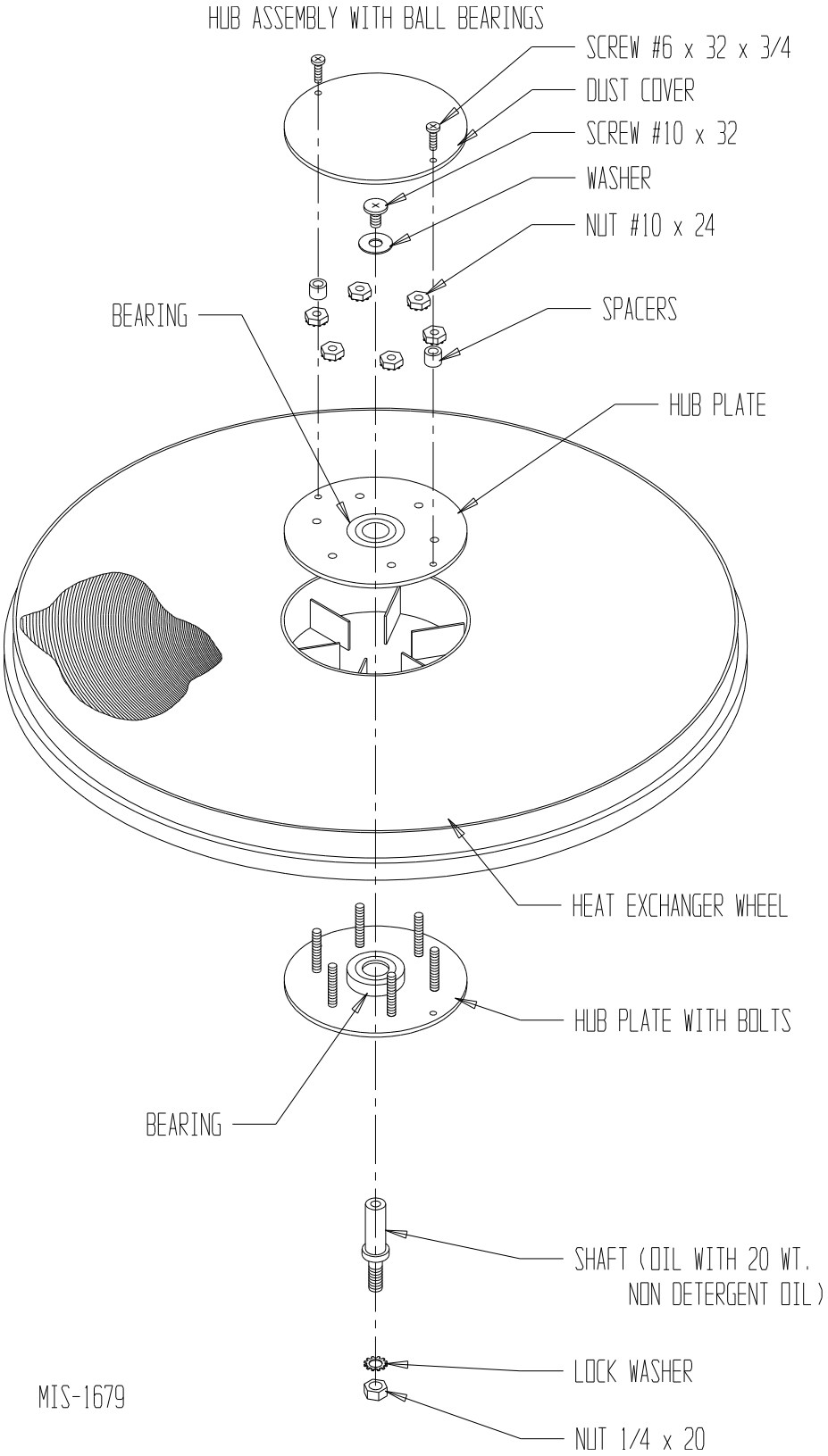
HUB ASSEMBLY WITH BALL BEARINGS
SCREW #6 x 32 x 3/4
DUST COVER
SCREW #10 x 32
WASHER
NUT #10 x 24
SPACERS
BEARING
HUB PLATE
HEAT EXCHANGER WHEEL
HUB PLATE WITH BOLTS
BEARING
SHAFT (OIL WITH 20 WT.
NON DETERGENT OIL)
LOCK WASHER
NUT 1/4 x 20
MIS-1679