INSTALLATION INSTRUCTIONS

ECONOMIZERS WITH EXHAUST

Model
CHEIFM-5

For Use with Bard 3 through 5 Ton CH Series Wall Mount Heat Pumps

Bard Manufacturing Company, Inc.
Bryan, Ohio 43506

Since 1914...moving ahead just as planned.

CLIMATE CONTROL SOLUTIONS

Manual :	2100-485B
Supersedes:	2100-485A
File:	Volume III Tab 19
Date:	01-16-09

© Copyright 2007

CONTENTS

GENERAL
General Information 3
Unpacking 3
Description 3

INSTALLATION
Basic Installation ..... 4, 5, 7 & 8
Economizer 8

WALL THERMOSTATS
Programmable/Non-Programmable 10

FIGURES
Figure 1 4
Figure 2 5
Figure 3 6
Figure 4 8
Figure 5 9
Figure 6 10
Figure 7 11

TABLES
Table 1 3
Table 2 7

CHARTS
CH3S1 12
CH4S1 13
CH5S1 14

Manufactured under U.S. Patent number 5,301,744.
Other patents pending.

COPYRIGHT MARCH 2007
BARD MANUFACTURING COMPANY, INC.
BRYAN, OHIO USA 43506

GENERAL

GENERAL INFORMATION

The economizer should only be installed by a trained heating and air conditioning technician. These instructions serve as a guide to the technician installing the economizer package. They are not intended as a step by step procedure with which the mechanically inclined owner can install the package.

The economizer housing is shipped in one carton, which contains the electrical harness, miscellaneous hardware and installation instructions.

The economizer installation requires three stage cooling thermostats in place of the normal two stage cooling thermostat. Also additional low voltage wire will be required to transmit the second call (Y2) for cool. (i.e., Use 6 conductor thermostat wire for an air conditioning unit and 9 conductor thermostat wire for heat pumps.) See Page 10 for required thermostats.

Any wall mount unit equipped with an economizer must also have a low ambient control installed. This control can be factory installed or field installed. If field installed, use kit CMA-6 (air conditioner models) or CMH-7 (heat pump models).

UNPACKING

Upon receipt of the equipment be sure to compare the model number found on the shipping label with the accessory identification information on the orders and shipping document to verify that the correct accessory has been shipped.

Inspect the carton housing of each economizer as it is received, and before signing the freight bill, verify that all items have been received and that there is no visible damage. Note any shortages or damage on all copies of the freight bill. The receiving party must contact the last carrier immediately, preferably in writing, requesting inspection by the carrier's agent. Concealed damage not discovered until after loading must be reported to the carrier within 15 days of its receipt.

DESCRIPTION

The CHEIFM-5 economizer is designed to be used with Bard 3 through 5 ton CH Series Wall Mount Heat Pumps equipped with low ambient fan cycling controls. They are electromechanical economizer systems designed to provide "free" cooling where the outdoor air temperature is cool enough to provide the needed cooling without running the compressor. When cooling is needed, the system automatically takes advantage of cold outdoor air when available and uses it for first stage cooling. This then reduces the need to run the air conditioning compressor providing lower operating costs and increasing the service life of the equipment. If the outdoor air gets too warm or humid to be helpful, the enthalpy control detects the condition and automatically closes the outdoor air and exhaust damper, opens the return air damper and switches to the compressor operation. This is all done automatically to achieve maximum savings without attention from the user. See Figure 6 for a block diagram of the economizer operation logic flow. The unit is equipped with a full modulating type damper motor, which controls the damper position to a factory set minimum supply air temperature.

TABLE 1

(1) Model	For Use with the Following Units
CHEIFM-5	CH3S1 CH4S1 CH5S1

(1) Low ambient control is required with economizer for low temperature compressor operation.

INSTALLATION

BASIC INSTALLATION

1. Unpack the economizer assembly which includes the integral economizer with attached electrical harness, mixed air thermistor, miscellaneous hardware and installation instructions.

⚠ WARNING

Open and lock unit disconnect switch before installing this accessory to prevent injury or death due to electrical shock or contact with moving parts. Turn thermostat to off.

2. Remove and save the existing exterior blower access and filter access panels on the Bard wall mount unit. Discard the service access panel. (See Figure 1.)
3. Remove and save existing unit return air filter and center screw in front grille. (See Figure 1.)
4. Remove and discard the back cover plate. (See Figure 1.)
5. Install economizer by inserting the economizer into the unit to the far left side clearing the right filter bracket. Once the economizer is fully inserted, slide the economizer to the right until it is tight against the back of the control panel. (See Figure 2.)

FIGURE 1

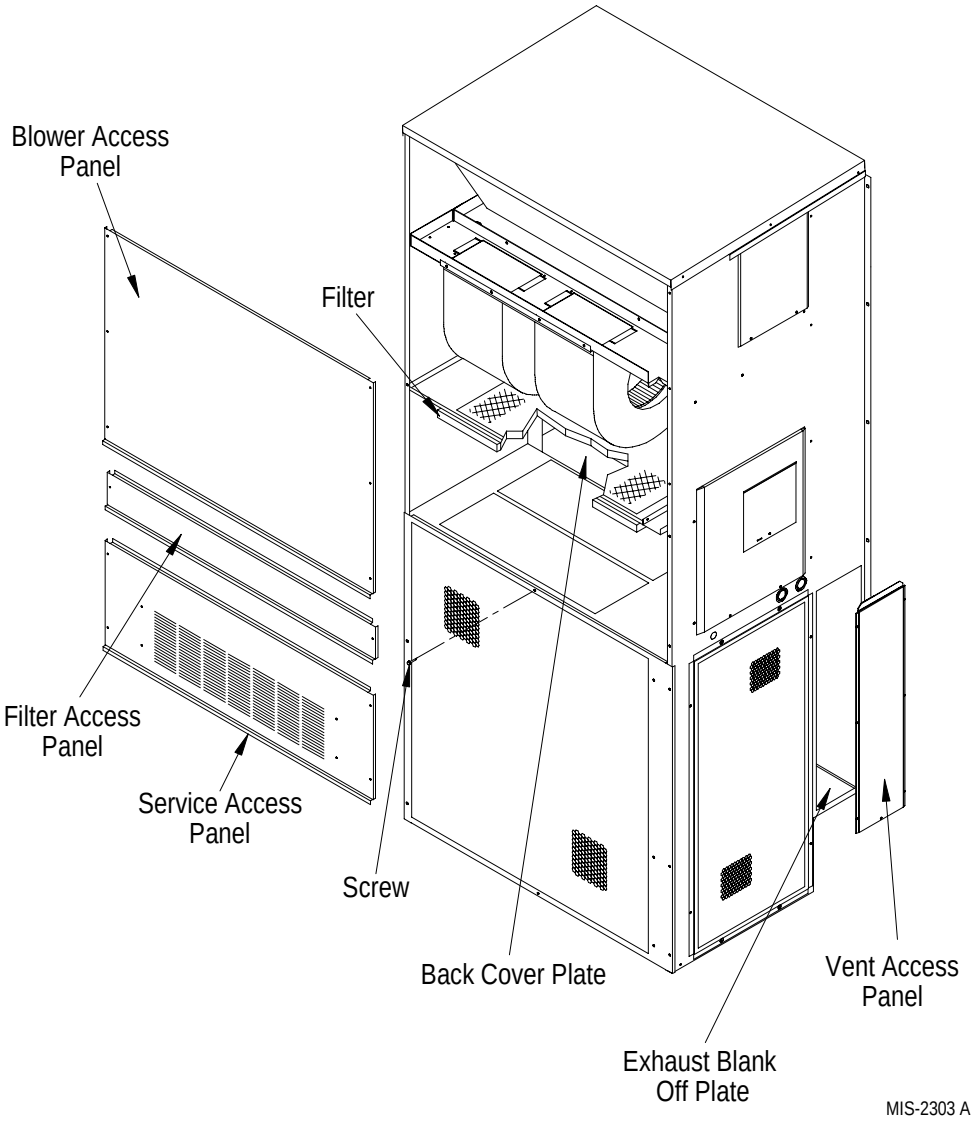

IMPORTANT: Position front lip of economizer on top of front grille and condenser partition (See Figure 2 inset.) This is important to ensure proper drainage of any water entering damper assembly.

6. Mount mixed air thermistor to blower partition with screws provided. Bracket with sensor installs on top of blower partition and screws are installed from the underside. Route wires as shown and secure with wire tie. Connect wires to thermistor. (See Figure 2.)
7. Remove vent access panel and then remove the bottom exhaust blank off and discard.
8. Re-install vent access panel.
9. Open unit control panel to gain access to unit low voltage terminal block.
10. Route electrical harness leads through the 7/8" bushing in control panel (Figure 2) into low voltage box.

FIGURE 2

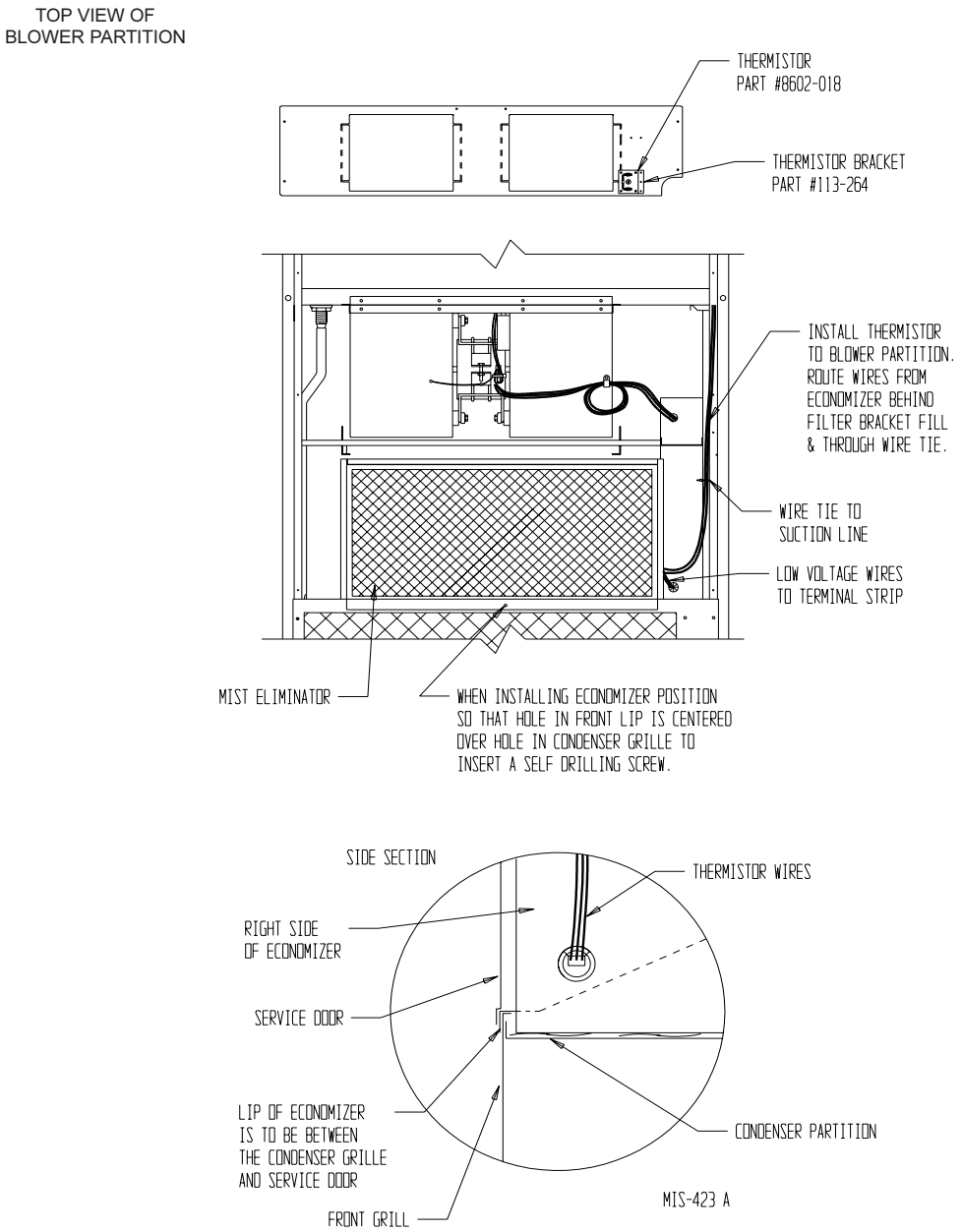

FIGURE 3
TOP VIEW OF CONTROL PANEL

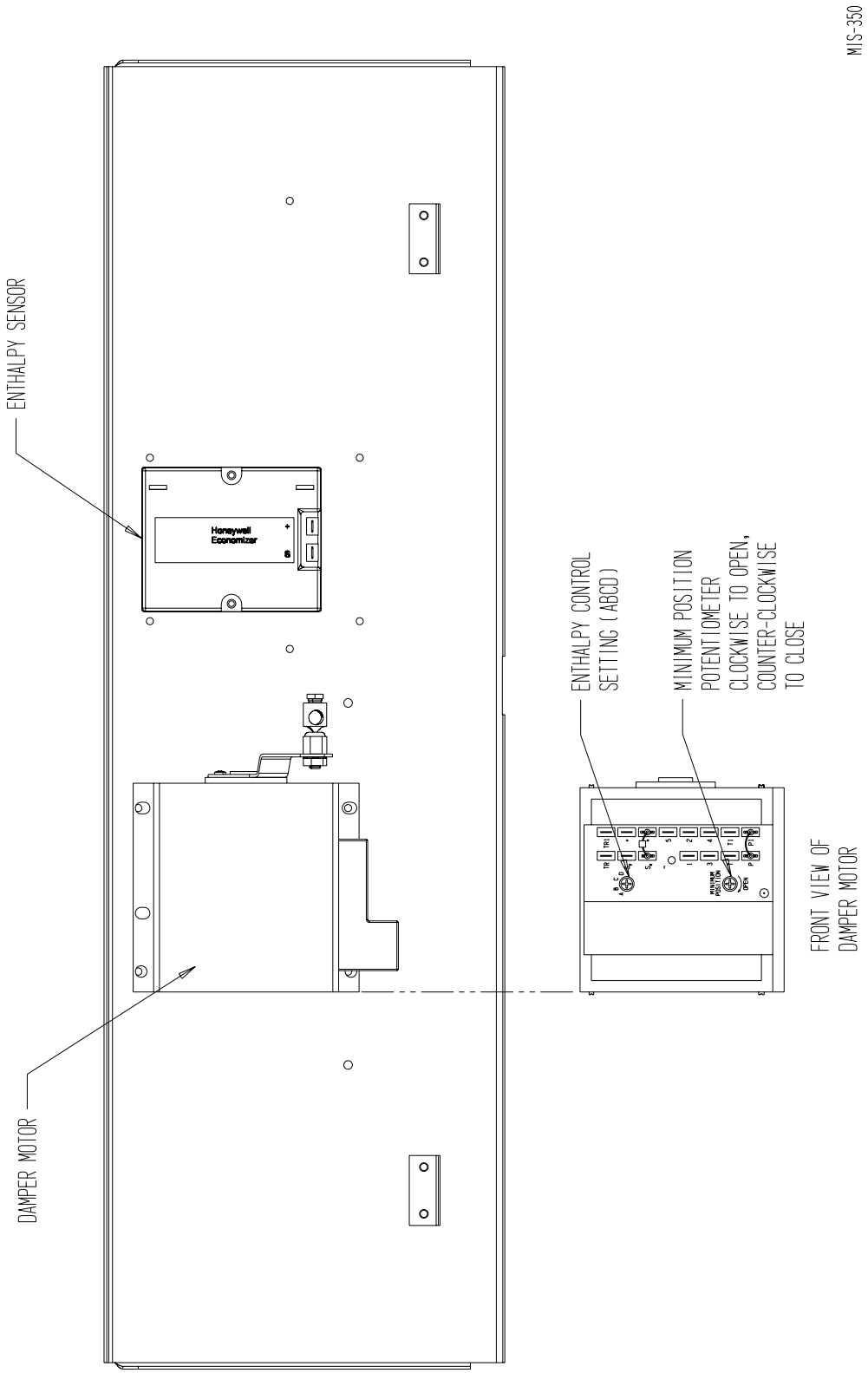

11. Connect leads with fork terminal to corresponding points on terminal strip. RE: C.Y.G. (See wiring diagram.)

12. Wire nut leads with 5/8" stripped ends to Y1 and Y2 leads from thermostat. See wiring diagram in this manual.

NOTE: Wires referenced in Note #1 on wiring diagram are for special control application only and are not normally used. They are used in conjunction with other circuitry to open the damper regardless of outside temperature and humidity. Consult factory for details.

13. Close control panel cover.

14. Reinstall the blower access panel at top of unit and secure with sheet metal screws.

15. Replace filter and screws in front condenser grille.

16. ECONOMIZER CHECK OUT

    A. Remove mist eliminator (Figure 2). Locate the minimum position potentiometer (See Figure 3).

    B. Energize the evaporator blower by switching thermostat to the manual fan position with heat/cool in the OFF position.

    C. Cycle the minimum position potentiometer (factory set for 0% fresh air) 0 to full open. (See Figure 3.) Throughout checkout procedure observe operation of damper to insure there is free, unobstructed operation through the entire angle of damper travel. Then adjust the damper minimum open position to meet local codes or application requirements. See charts for required blade position to achieve minimum CFM requirement.

    D. Adjust the enthalpy control to position A, B, C and D to achieve the maximum combination of temperature and humidity acceptable for the installation as per Table 2 below. The suggested setting is between A & B 70° DB @ 55 percent RH. It is further recommended to always set the control at C or above.) (See Figure 3.)

    E. Switch the thermostat fan control to automatic and position the heat/cool switch to cool. Adjust the thermostat temperature to engage the first stage of cooling only (Y). This will cause the dampers to modulate to achieve mixed air temperature of 55° provided outside air enthalpy is sufficiently low. If enthalpy is too high for economizing, low enthalpy can be simulated by temporarily removing and jumping leads on terminal 2 and 3 of enthalpy control together. This will also cause the economizer damper to modulate away from minimum position. (*Be sure to properly reconnect leads at end of checkout procedure*).

TABLE 2
ENTHALPY CONTROL SETTINGS

	Dial Setting	20% RH	50% RH	80% RH
Enthalpy Control Setting	A	80 deg .F (26 deg. C)	73 deg. F (23 deg. C)	66 deg. F (19 deg.C)
	B	76 deg. F (24 deg. C)	70 deg. F (21 deg. C)	63 deg. F (17 deg. C)
	C	74 deg. F (23 deg. C)	66 deg. F (19 deg. C)	59 deg. F (15 deg. C)
	D	71 deg. F (21 deg. C)	63 deg. F (17 deg. C)	54 deg. F (12 deg. C)

F. Readjust temperature on the thermostat to engage the second stage of cooling (Y2). The damper motor should return to previously set minimum position. Compressor motor should start.

G. Switch thermostat to OFF fan and OFF heat/ cool positions to de-energize unit. Economizer damper should return to full closed (100 percent return air) position. Checkout is complete.

17. Replace control access panel and mist eliminator.
18. Replace filter access panel.
19. Economizer is now ready for operation.

ECONOMIZER – CH SERIES

FEATURES

- One piece construction – easy to install with no mechanical linkage adjustment required.
- Exhaust air damper – built in with positive closed position. Provides exhaust air capability to prevent pressurization of tight buildings.
- Actuator motor – 24 volt, power open, spring return with built in torque limiting switch.
- Proportioning type control – for maximum "Free Cooling" economy and comfort with up to 100% outside air.
- Enthalpy control to monitor outdoor temperature and humidity – adjustable.
- Minimum position potentiometer – adjustable to control minimum damper blade position.
- Mixed air sensor to monitor outdoor and return air to automatically modulate damper position.
- Replace the service door with the new service door and fresh air hood provided.

ECONOMIZER SEQUENCE OF OPERATION

Condition A – Cool Outdoors

First stage cooling closes and powers the economizer dampers to economizer mode and the indoor blower starts. Mixed Air Sensor senses a mixture of return air and outdoor air and modulates the dampers accordingly. Compressor operation is inhibited. (See Figure 4.)

If second stage closes on the thermostat, the dampers return to the closed or minimum position setting and the compressor starts for mechanical 1st stage low capacity cooling.

If third stage closes, the compressor solenoid energizes and provides second stage high capacity cooling.

FIGURE 4
ECONOMIZER OPERATION

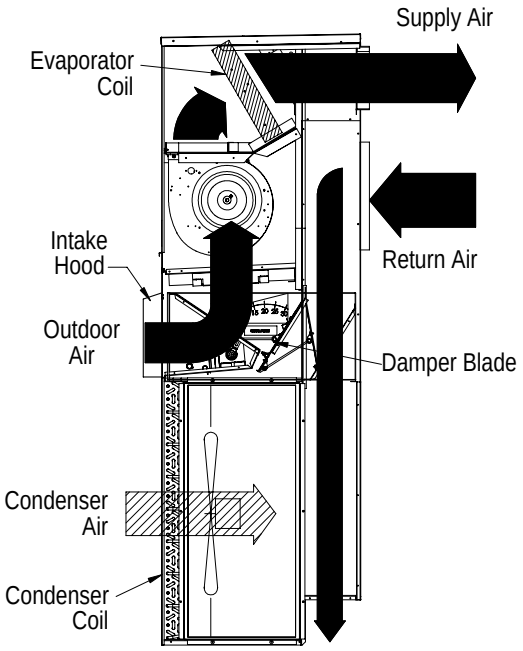

MIS-2302 A

CONDITION B – WARM OUTDOORS

First stage cooling cycles the compressor and dampers remain in mechanical cooling mode.

FIGURE 5
MECHANICAL COOLING OPERATION

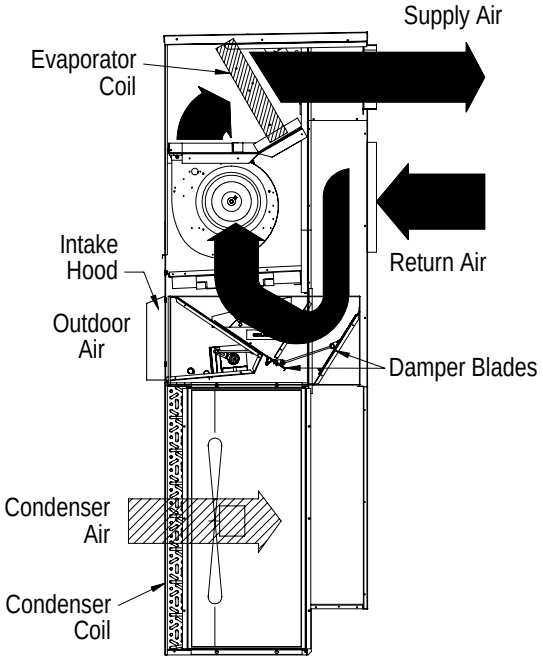

MIS-2301 A

FIGURE 6
ECONOMIZER OPERATION
FOR SINGLE COMPRESSOR UNIT

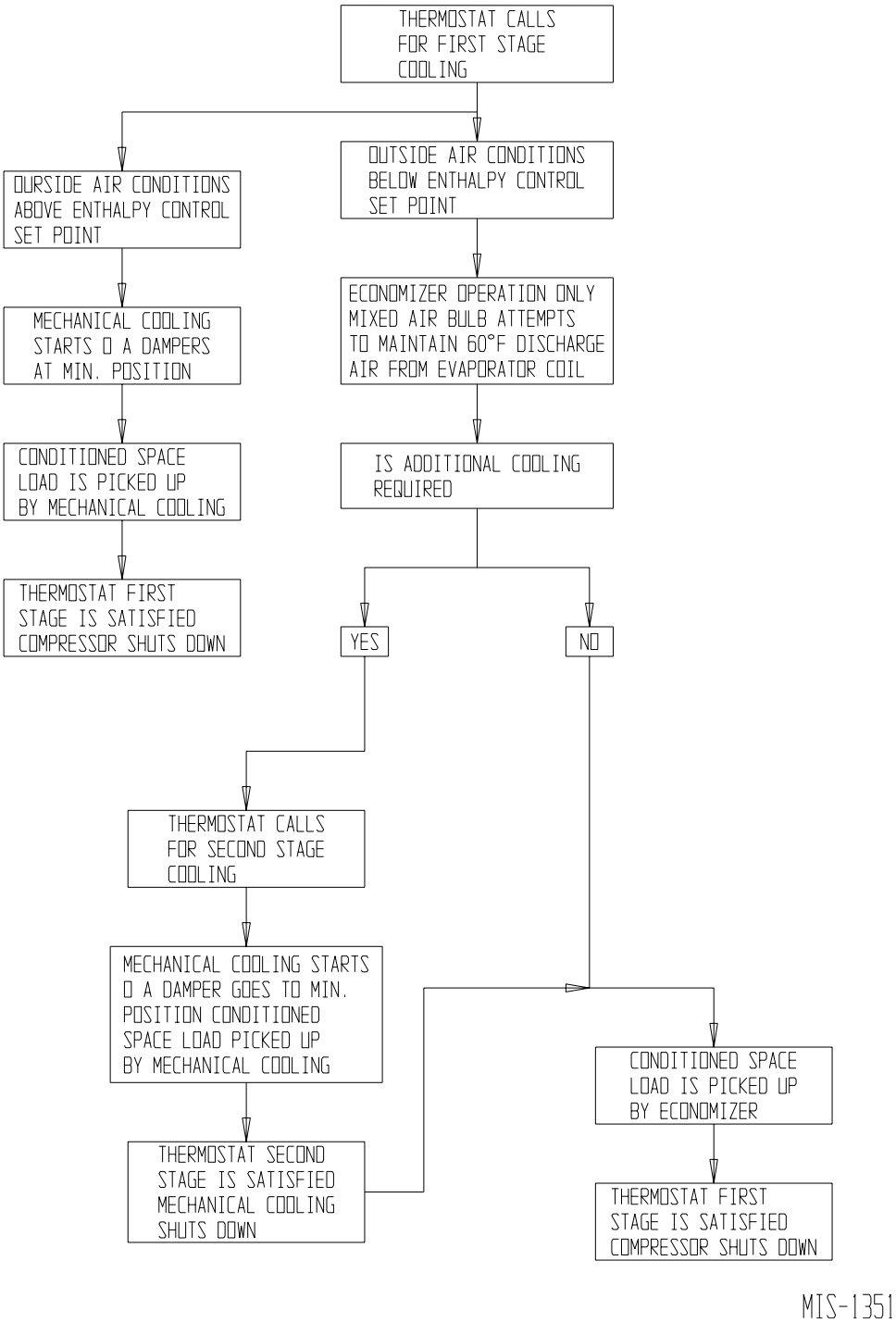

WALL THERMOSTATS

FOR HEAT PUMPS WITH ECONOMIZER
8403-060 Programmable or Non-Programmable
Electronic Heat Pump Thermostat
3 Stage Cool / 3 Stage Heat

FIGURE 7

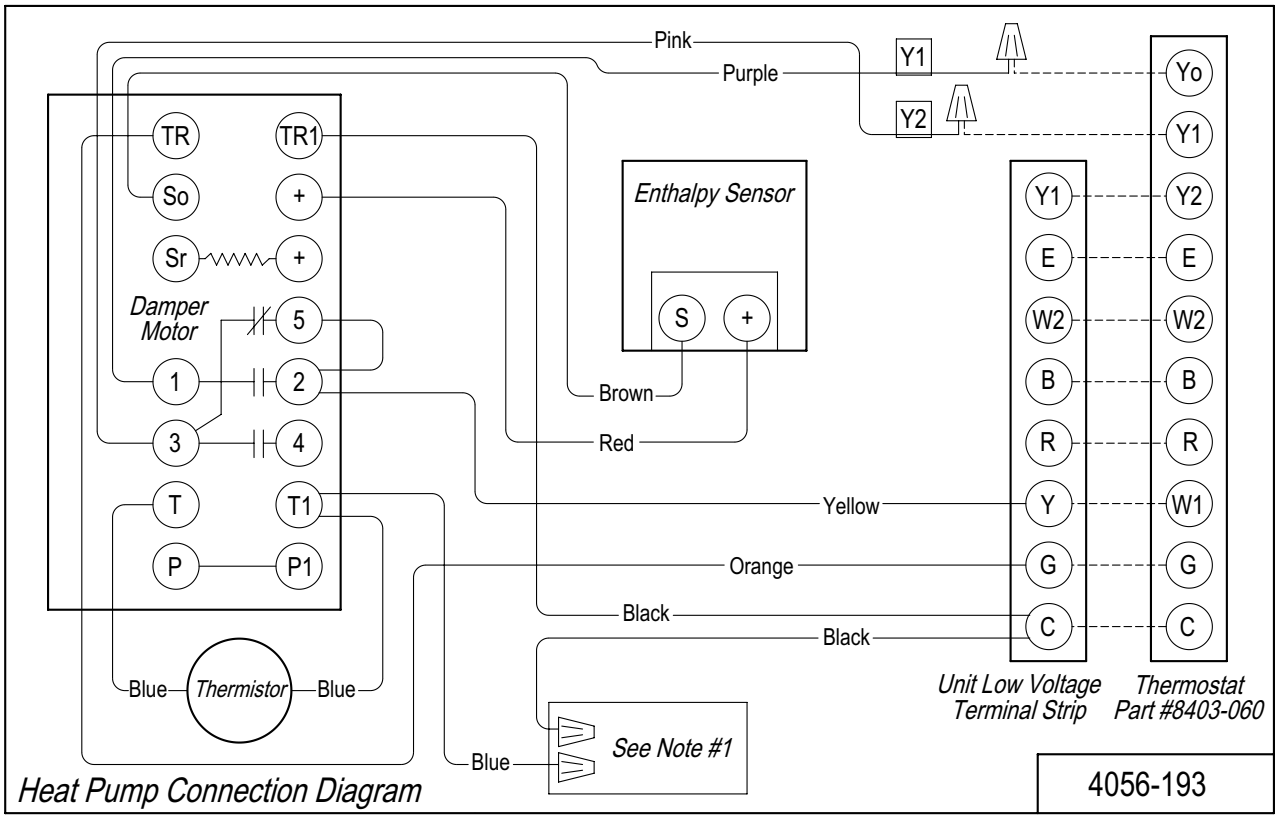

Note #1: These wires used in special control applications only. See page 7 of Installation Instructions.

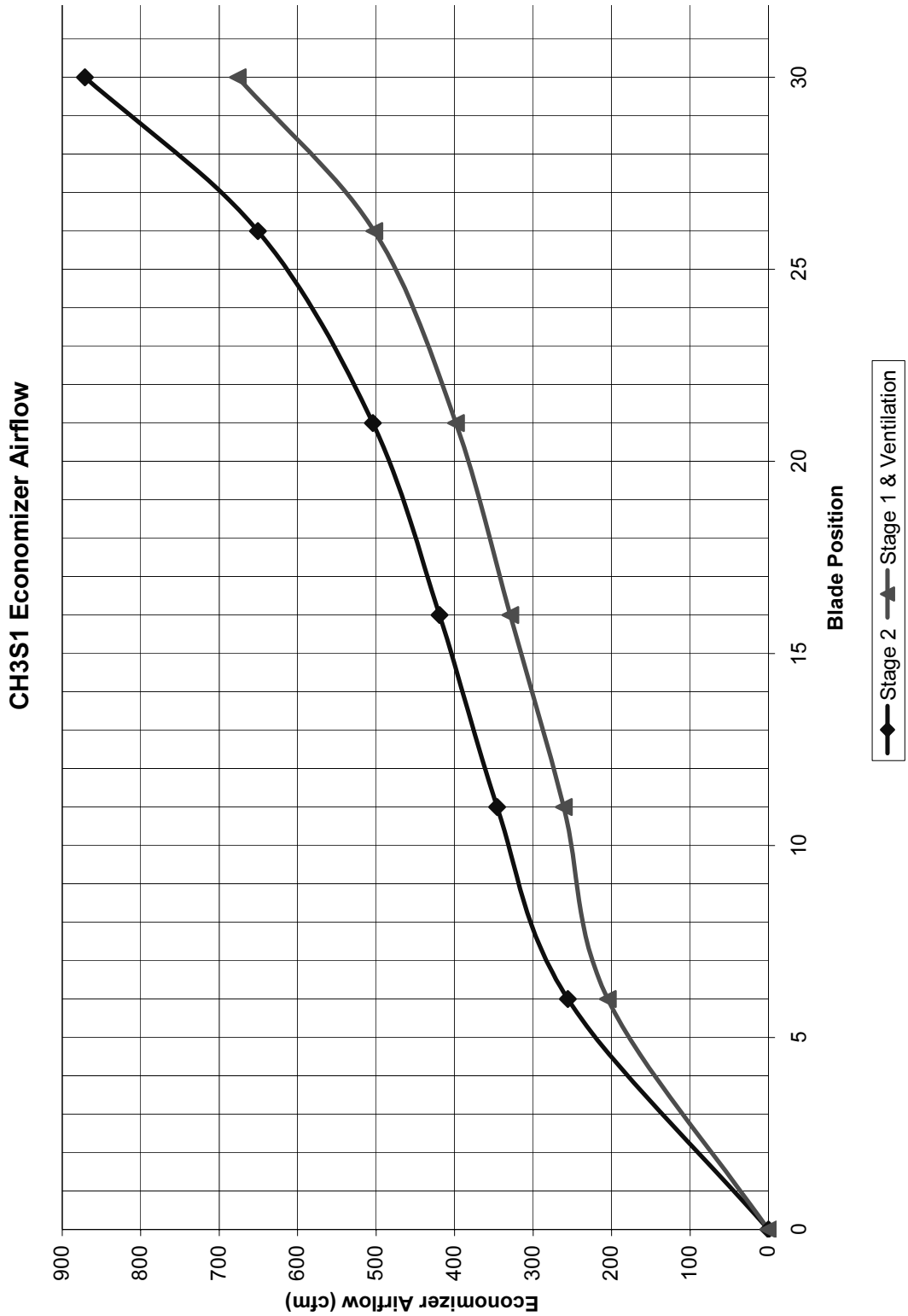
CH3S1 Economizer Airflow
Economizer Airflow (cfm)
900
800
700
600
500
400
300
200
100
0
0
5
10
15
20
25
30
Blade Position
Stage 2
Stage 1 & Ventilation

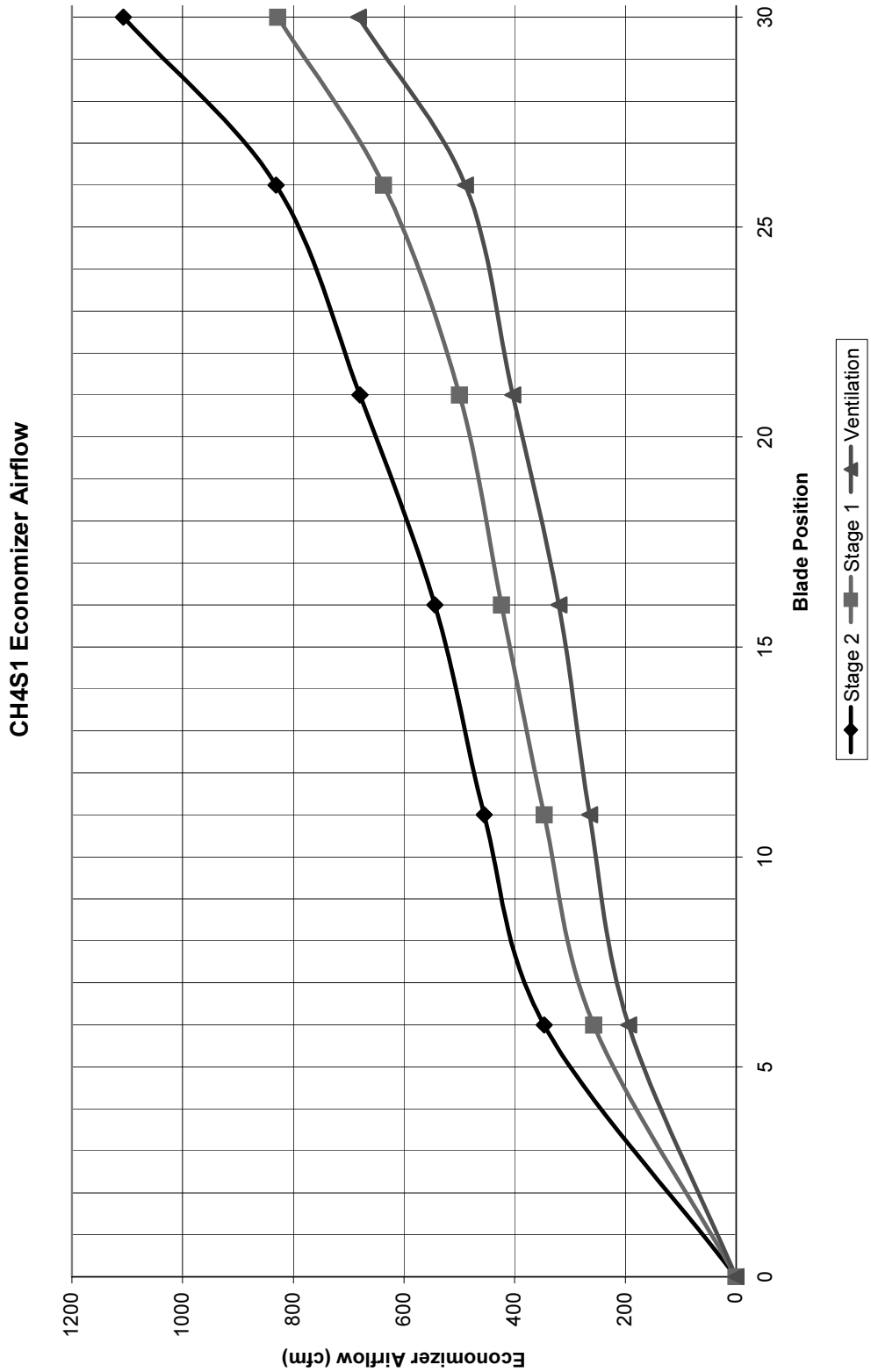
CH4S1 Economizer Airflow
Economizer Airflow (cfm)
1200
1000
800
600
400
200
0
0
5
10
15
20
25
30
Blade Position
Stage 2
Stage 1
Ventilation

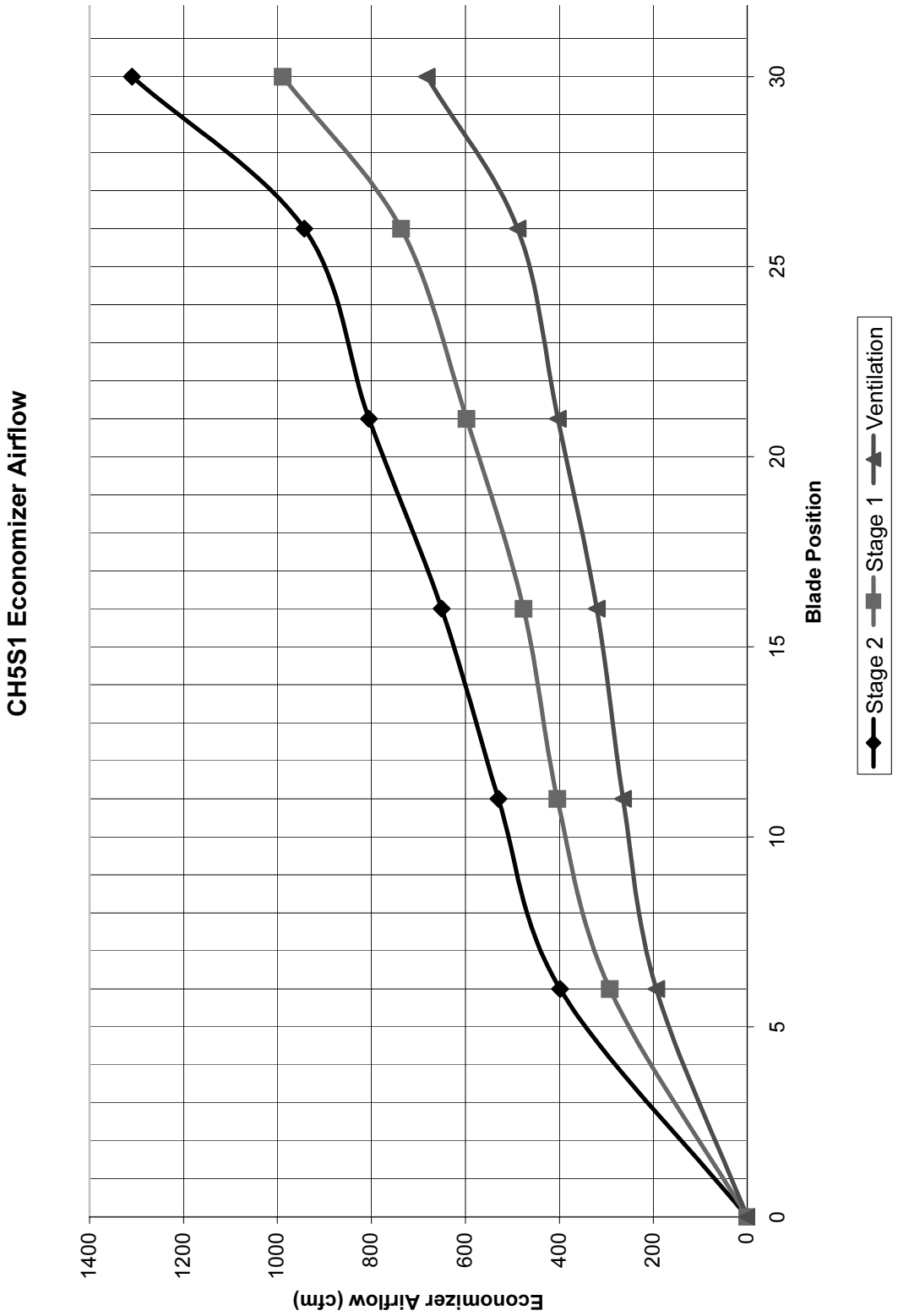
CH5S1 Economizer Airflow
Economizer Airflow (cfm)
1400
1200
1000
800
600
400
200
0
0
5
10
15
20
25
30
Blade Position
Stage 2
Stage 1
Ventilation