INSTALLATION INSTRUCTIONS

QTEC SERIES PACKAGED HEAT PUMP

Models:

Q24H1D **Q30H1D**
Q36H1D **Q42H1D**
Q48H1D **Q60H1D**

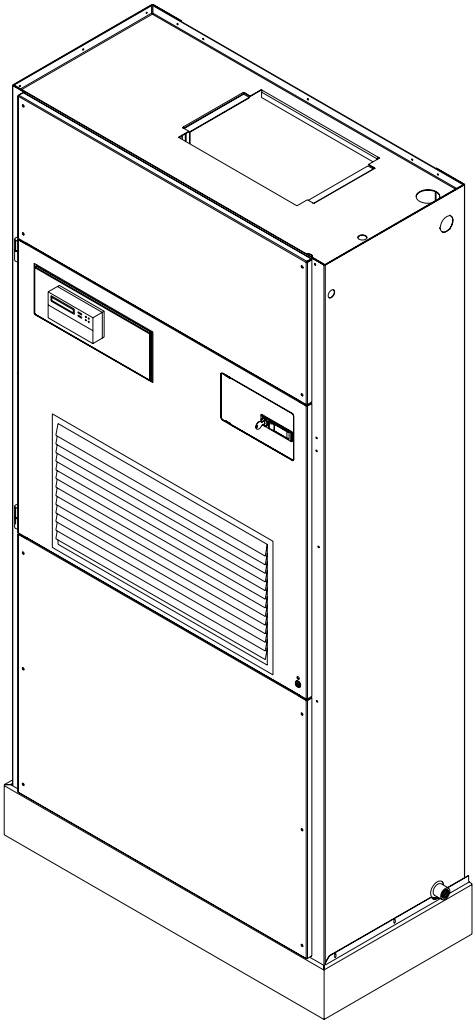

MIS-1554

Bard Manufacturing Company, Inc.
Bryan, Ohio 43506

Since 1914 . . . Moving ahead, just as planned.

Manual: 2100-521A
Supersedes: 2100-521
File: Vol II Tab 14
Date: 06-27-11

CONTENTS

Getting Other Information and Publications
For more information, contact these publishers: 3

QTEC General Information
QTEC Model Nomenclature 4
Shipping Damage 8
Unit Removal From Skid 8
Handling Unit After Removal From Skid 9
General 9
Minimum Installation Height 9
Duct Work 11
Filters 11
Fresh Air Intake 12
Service Light 12
Condensate Drain 12
Optional Rear Drain Kits 12

Installation Instructions
Mounting the Unit 19
Wiring — Main Power 20
Wiring — Low Voltage Wiring 20
Low Voltage Connections 21
General 21

Figures
Figure 1 Unit Dimensions 7
Figure 2 Air Seal Under Unit 8
Figure 3 Removal of Unit From Skid 8
Figure 4 Unit on Appliance Cart 9
Figure 5 Installation With Free Blow Plenum 10
Figure 6 Ducted Application 10
Figure 7 Supply Duct Connections 11
Figure 8 Filter Location 11
Figure 9 Optional Side Drain 13
Figure 10 Standard Rear Drain 13
Figure 11 Rear Drain (Top View) 13
Figure 12A Optional Rear Drain Kit 14
Figure 12B Optional Rear Drain Kit 15
Figure 12C Optional Rear Drain Kit 16
Figure 12D Optional Rear Drain Kit 17
Figure 13A Unit Mounting - Method 1 18
Figure 13B Unit Mounting - Method 2 18
Figure 14 Removing Locking Screws from Wheels 19
Figure 15 Component Location 20
Figure 16 Thermostat Plug Terminals 22
Figure 17 Dehum. Wiring w/"X" T-Stat 23
Figure 18 Dehum. Wiring w/"X" T-Stat & Demand 24
Figure 19 Dehum. Wiring w/"X" T-Stat & Vent Opt. ... 25
Figure 20 Dehum. Wiring w/"E" T-Stat 26
Figure 21 Dehum. Wiring w/"G" T-Stat 27
Figure 22 Dehum. Wiring w/"I" T-Stat 28
Figure 23 Fresh Air Damper Removal 33
Figure 24 QERV Removal 34
Figure 25 CO_2 Controller 36
Figure 26 Dehumidification Mode Circuit 37
Figure 27 Cooling Mode Circuit 38
Figure 28 Defrost Control Board 40
Figure 29 Control Disassembly 44
Figure 30 Winding Test 44
Figure 31 Drip Loop 44
Figure 32 Fan Blade Setting 45

Start Up
R-410A Refrigerant:
General 29
Topping Off System Charge 29
Safety Practices 29
Description of Standard Equipment 30
Optional CFM 30
Important Installer Note 30
Phase Monitor 30
Three Phase Scroll Compressor Start Up Information 30
Service Hints 31
Mist Eliminator Service 31
Vent Options 32
Sequence of Operation 35
Optional Climate Controls Sequence of Operation ..... 35 & 36
Refrigerant Tube Schematic for Reheat Coil 36
Pressure Service Ports 36
Defrost Cycle 39

Troubleshooting
Solid State Heat Pump Control Troubleshooting Procedure 41
Checking Temperature Sensor 42
Troubleshooting GE ECM™ Blower Motors 43-44
Fan Blade Setting Dimensions 45
Refrigerant Charge 45
Pressure Charts 46-47

Tables
Table 1 Factory Built-In Electric Heat Table 4
Table 2 Electrical Specifications 5
Table 2A Electrical Specifications 6
Table 3 Operating Voltage Range 20
Table 4 Wall Thermostats 22
Table 5 Troubleshooting 41
Table 6 Temperature vs Resistance of Temperature Sensor 42
Table 7 Fan Blade Dimensions 45
Table 8 Superheat at Compressor 45
Table 9 Indoor Blower Performance 45
Table 10 Cooling Pressure 46
Table 11 Heating Pressure 47
Table 12 Dehumidification Relay Logic Board 48

GETTING OTHER INFORMATION AND PUBLICATIONS

These publications can help you install the air conditioner or heat pump. You can usually find these at your local library or purchase them directly from the publisher. Be sure to consult current edition of each standard.

National Electrical Code ..... ANSI/NFPA 70

Standard for the Installation ..... ANSI/NFPA 90A
of Air Conditioning and Ventilating Systems

Standard for Warm Air .....ANSI/NFPA 90B
Heating and Air Conditioning Systems

Load Calculation for .....ACCA Manual J or
Winter and Summer Manual N
Air Conditioning

Low Pressure, Low Velocity ..... ACCA Manual D or
Duct System Design Manual Q
Winter and Summer
Air Conditioning

FOR MORE INFORMATION, CONTACT THESE PUBLISHERS:

ACCA **Air Conditioning Contractors of America**
1712 New Hampshire Avenue
Washington, DC 20009
Telephone: (202) 483-9370
Fax: (202) 234-4721

ANSI **American National Standards Institute**
11 West Street, 13th Floor
New York, NY 10036
Telephone: (212) 642-4900
Fax: (212) 302-1286

ASHRAE **American Society of Heating, Refrigeration, and Air Conditioning Engineers, Inc.**
1791 Tullie Circle, N.E.
Atlanta, GA 30329-2305
Telephone: (404) 636-8400
Fax: (404) 321-5478

NFPA **National Fire Protection Association**
Batterymarch Park
P.O. Box 9101
Quincy, MA 02269-9901
Telephone: (800) 344-3555
Fax: (617) 984-7057

QTEC Series General Information

QTEC MODEL NOMENCLATURE

Q 36 H 1 D A 10 X X X X X X

MODEL NUMBER
Q - QTEC

CAPACITY
24 - 2 Ton
30 - 2½ Ton
36 - 3 Ton
42 - 3½ Ton
48 - 4 Ton
60 - 5 Ton

HEAT PUMP

REVISION

SPECIAL UNITS
D - Dehumidification w/Hot Gas Reheat

VOLTS & PHASE
A - 230/208/60/1
B - 230/208/60/3
C - 460/60/3

KW
0Z - 0KW
05 - 5KW
06 - 6KW
09 - 9KW
10 - 10KW
12 - 12KW
15 - 15KW

VENTILATION OPTIONS
X - Barometric Fresh Air Damper (Standard)
B - Blank-off Plate
R - Energy Recovery Ventilator w/Exhaust
P - Commercial Ventilator - Motorized w/Exhaust Power Return
V - Commercial Ventilator - Motorized w/Exhaust Spring Return

FILTER OPTIONS
X - 1-Inch Fiberglass (Standard)
F - 2-Inch Fiberglass
P - 2-Inch Pleated

COLOR OPTIONS
X - Standard Beige
V - Platinum w/Slate Front (Vinyl)
4 - Gray paint

CLIMATE CONTROL OPTIONS
X - None
E - Electronic/Prog/Man/Auto/Humidistat
G - Electronic/Non Prog/Man/Auto/Humidistat
I - Electronic/Prog/Man/Auto/with CO_2

COIL OPTIONS
X - Standard

INTERNAL CONTROLS
X - Standard
- High Pressure Switch
- Low Pressure Switch
- Compressor Time Delay

E - Low Ambient Control
Q - Outdoor Thermostat
R - Low Ambient Control & Outdoor Thermostat

TABLE 1
FACTORY BUILT-IN ELECTRIC HEAT TABLE

Models	Q24H1DA Q30H1DA		Q24H1DB		Q30H1DB		Q24H1DC	Q30H1DC	Q36H1DA Q42H1DA Q48H1DA Q60H1DA		Q36H1DB Q42H1DB Q48H1DB Q60H1DB		Q36H1DC Q42H1DC Q48H1DC Q60H1DC
	240V-1	208V-1	240V-1	208V-1	240V-1	208V-1	480V-3	480V-3	240V-1	208V-1	240V-1	208V-1	480V-3
KW	BTUH	BTUH	BTUH	BTUH	BTUH	BTUH	BTUH	BTUH	BTUH	BTUH	BTUH	BTUH	BTUH
5.0	16,380	12,290											
6.0			20,500	15,360	20,500	15,360	20,500	20,500			20,500	15,360	20,500
9.0			30,700	23,000	30,700	23,000	30,700	30,700			30,700	23,000	30,700
10.0	32,670	24,570							32,670	24,570			
12.0					41,000	30,700		41,000					
15.0									49,150	36,860	49,150	36,860	49,150

TABLE 2
ELECTRICAL SPECIFICATIONS

Model	Rated Volts and Phase	Single Circuit					Dual Circuit							
		No. Field Power Circuits	③ Minimum Circuit Ampacity	① Maximum External Fuse or Ckt. Brkr.	② Field Power Wire Size	② Ground Wire	③ Minimum Circuit Ampacity		① Maximum External Fuse or Ckt. Breaker		② Field Power Wire Size		② Ground Wire Size	
							Ckt. A	Ckt. B	Ckt. A	Ckt. B	Ckt. A	Ckt. B	Ckt. A	Ckt. B
Q24H1DA0Z	230/208-1	1	22	30	10	10	-	-	-	-	-	-	-	-
A05		1	47	50	8	10	-	-	-	-	-	-	-	-
A10		1 or 2	72	80	4	8	22	50	30	50	10	8	10	10
Q24H1DB0Z	230/208-3	1	17	20	12	12	-	-	-	-	-	-	-	-
B06		1	35	35	8	10	-	-	-	-	-	-	-	-
B09		1	44	45	8	10	-	-	-	-	-	-	-	-
Q24H1DC0Z	460-3	1	10	15	14	14	-	-	-	-	-	-	-	-
C06		1	19	20	12	12	-	-	-	-	-	-	-	-
C09		1	23	25	10	10	-	-	-	-	-	-	-	-
Q30H1DA0Z	230/208-1	1	25	35	8	10	-	-	-	-	-	-	-	-
A05		1	50	50	8	10	-	-	-	-	-	-	-	-
A10		1 or 2	75	80	4	8	25	50	30	50	10	8	10	10
Q30H1DB0Z	230/208-3	1	18	25	10	10	-	-	-	-	-	-	-	-
B06		1	37	40	8	10	-	-	-	-	-	-	-	-
B09		1	45	45	8	10	-	-	-	-	-	-	-	-
B12		1	55	60	6	10	-	-	-	-	-	-	-	-
Q30H1DC0Z	460-3	1	12	15	14	14	-	-	-	-	-	-	-	-
C06		1	21	25	10	10	-	-	-	-	-	-	-	-
C09		1	25	25	10	10	-	-	-	-	-	-	-	-
C12		1	30	30	10	10	-	-	-	-	-	-	-	-
Q36H1DA0Z	230/208-1	1	31	45	8	10	-	-	-	-	-	-	-	-
A05		1	56	60	6	10	-	-	-	-	-	-	-	-
A10		1 or 2	81	90	4	8	31	50	45	50	8	8	10	10
④ A15		1 or 2	83	90	4	8	33	50	45	50	8	8	10	10
Q36H1DB0Z	230/208-3	1	25	30	10	10	-	-	-	-	-	-	-	-
B06		1	43	50	8	10	-	-	-	-	-	-	-	-
B09		1	52	60	6	10	-	-	-	-	-	-	-	-
⑤ B15		1	53	60	6	10	-	-	-	-	-	-	-	-
Q36H1DC0Z	460-3	1	12	15	14	14	-	-	-	-	-	-	-	-
C06		1	21	25	10	10	-	-	-	-	-	-	-	-
C09		1	26	30	10	10	-	-	-	-	-	-	-	-
⑤ C15		1	27	30	10	10	-	-	-	-	-	-	-	-

① Maximum size of the time delay fuse or HACR type circuit breaker for protection of field wiring conductors.

② Based on 75°C copper wire. All wiring must conform to the National Electrical Code and all local codes.

③ These “Minimum Circuit Ampacity” values are to be used for sizing the field power conductors. Refer to the National Electric Code (latest revision), article 310 for power conductor sizing.

CAUTION: When more than one field power conductor circuit is run through one conduit, the conductors must be derated. Pay special attention to Note 8 of Table 310 regarding Ampacity Adjustment Factors when more than three conductors are in a raceway.

④ Maximum KW that can operate with heat pump on is 10KW. Other 5KW energizes during emergency heating only.

⑤ Maximum KW that can operate with heat pump on is 9KW. Other 6KW energizes during emergency heating only.

NOTE: Reference Form 7960-582 for dehumidification model performance information.

ELECTRICAL SPECIFICATIONS Continued on Page 6 TABLE 2A

TABLE 2A
ELECTRICAL SPECIFICATIONS
(continued from Page 5)

Model	Rated Volts and Phase	Single Circuit					Dual Circuit							
		No. Field Power Circuits	③ Minimum Circuit Ampacity	① Maximum External Fuse or Ckt. Brkr.	② Field Power Wire Size	② Ground Wire	③ Minimum Circuit Ampacity		① Maximum External Fuse or Ckt. Breaker		② Field Power Wire Size		② Ground Wire Size	
							Ckt. A	Ckt. B	Ckt. A	Ckt. B	Ckt. A	Ckt. B	Ckt. A	Ckt. B
Q42H1DA0Z	230/208-1	1	34	50	8	10	-	-	-	-	-	-	-	-
A05		1	59	60	6	10	-	-	-	-	-	-	-	-
A10		1 or 2	84	90	4	8	34	50	45	50	8	8	10	10
④ A15		1 or 2	84	90	4	8	34	50	45	50	8	8	10	10
Q42H1DB0Z	230/208-3	1	25	35	8	10	-	-	-	-	-	-	-	-
B06		1	43	50	8	10	-	-	-	-	-	-	-	-
B09		1	52	60	6	10	-	-	-	-	-	-	-	-
⑤ B15		1	53	60	6	10	-	-	-	-	-	-	-	-
Q42H1DC0Z	460-3	1	13	15	14	14	-	-	-	-	-	-	-	-
C06		1	22	25	10	10	-	-	-	-	-	-	-	-
C09		1	26	30	10	10	-	-	-	-	-	-	-	-
⑤ C15		1	27	30	10	10	-	-	-	-	-	-	-	-
Q48H1DA0Z	230/208-1	1	38	50	8	10	-	-	-	-	-	-	-	-
A05		1 or 2	63	70	6	8	38	25	50	25	8	10	10	10
A10		1 or 2	88	90	3	8	38	50	50	50	8	8	10	10
④ A15		1 or 2	88	90	3	8	38	50	50	50	8	8	10	10
Q48H1DB0Z	230/208-3	1	29	40	8	10	-	-	-	-	-	-	-	-
B06		1	47	50	8	10	-	-	-	-	-	-	-	-
B09		1	56	60	6	10	-	-	-	-	-	-	-	-
⑤ B15		1	56	60	6	10	-	-	-	-	-	-	-	-
Q48H1DC0Z	460-3	1	15	20	12	12	-	-	-	-	-	-	-	-
C06		1	24	25	10	10	-	-	-	-	-	-	-	-
C09		1	28	30	10	10	-	-	-	-	-	-	-	-
⑤ C15		1	28	30	10	10	-	-	-	-	-	-	-	-
Q60H1DA0Z	230/208-1	1	45	60	8	10	-	-	-	-	-	-	-	-
A05		1 or 2	70	90	4	8	45	25	60	25	8	10	10	10
A10		1 or 2	95	100	3	8	45	50	60	50	8	8	10	10
⑤ A15		1 or 2	95	100	3	8	45	50	60	50	8	8	10	10
Q60H1DB0Z	230/208-3	1	31	45	8	10	-	-	-	-	-	-	-	-
B09		1	58	60	6	10	-	-	-	-	-	-	-	-
⑤ B15		1	58	60	6	10	-	-	-	-	-	-	-	-
Q60H1DC0Z	460-3	1	17	25	10	10	-	-	-	-	-	-	-	-
C09		1	31	35	8	10	-	-	-	-	-	-	-	-
⑤ C15		1	31	35	8	10	-	-	-	-	-	-	-	-

① Maximum size of the time delay fuse or HACR type circuit breaker for protection of field wiring conductors.

② Based on 75°C copper wire. All wiring must conform to the National Electrical Code and all local codes.

③ These "Minimum Circuit Ampacity" values are to be used for sizing the field power conductors. Refer to the National Electric Code (latest revision), article 310 for power conductor sizing.

CAUTION: When more than one field power conductor circuit is run through one conduit, the conductors must be derated. Pay special attention to Note 8 of Table 310 regarding Ampacity Adjustment Factors when more than three conductors are in a raceway.

④ Maximum KW that can operate with heat pump on is 10KW. Other 5KW energizes during emergency heating only.

⑤ Maximum KW that can operate with heat pump on is 9KW. Other 6KW energizes during emergency heating only.

NOTE: Reference Form 7960-582 for dehumidification model performance information.

FIGURE 1
UNIT DIMENSIONS

DIMENSION CHART				
UNIT	DIM. A	DIM. B	DIM. C	DIM. D	DIM. E
Q24H1D	7.625	42.000	30.000	30.000	43.000
Q30H1D					
Q36H1D					
Q42H1D					
Q48H1D	10.625	48.000	40.000	40.000	49.000
Q60H1D					

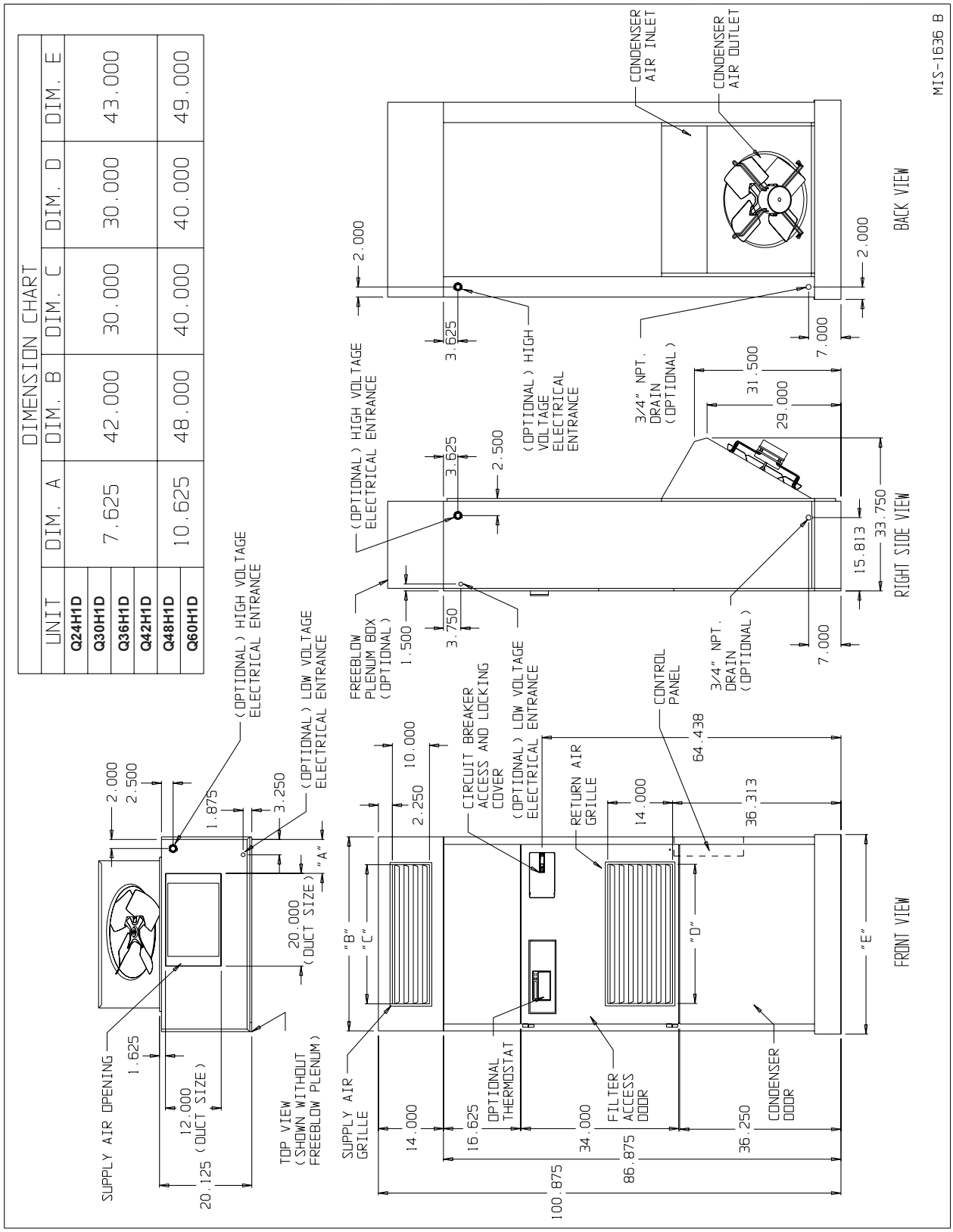

SHIPPING DAMAGE

Upon receipt of equipment, the carton should be checked for external signs of shipping damage. The skid must remain attached to the unit until the unit is ready for installation. If damage is found, the receiving party must contact the last carrier immediately, preferably in writing, requesting inspection by the carrier's agent.

UNIT REMOVAL FROM SKID

⚠ WARNING

This unit is heavy and requires more than one person to handle and remove from the skid. Check unit wheels to ensure that wheels are locked before removing from skid. Extreme caution must be taken to prevent injury to personnel and damage to the unit.

It is recommended that the unit not be removed from the skid with a forklift since the air seal under the unit could be damaged. See Figure 2.

The shipping brackets on each side of the unit must be removed and discarded. See Figure 3-A. The return air grille panel can be removed to provide a place to hold the unit. The unit can be slid forward on the skid until the front wheels hang over the edge of the skid. See Figure 3-B. The unit can be tipped forward and slid down the edge of the skid until the front wheels touch the ground. See Figure 3-C. The wheels will not roll. They are shipped from the factory locked so they will not roll. The back of the skid will have to be held down to keep it from tipping up. The skid can be slid out from under the unit. The unit can then be set upright.

FIGURE 2
AIR SEAL UNDER QTEC UNIT

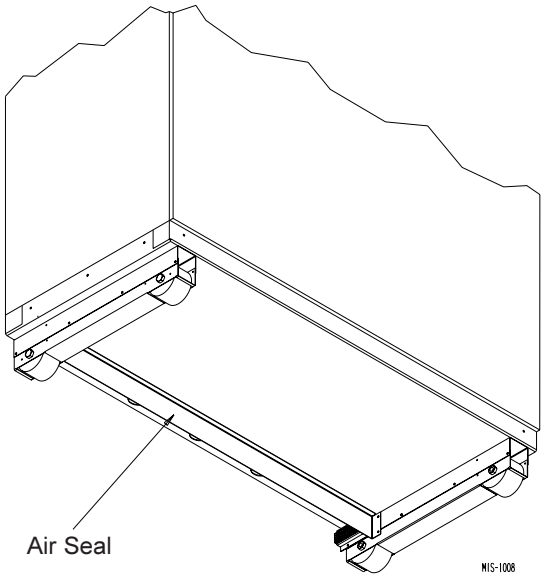

FIGURE 3
REMOVAL OF UNIT FROM SKID

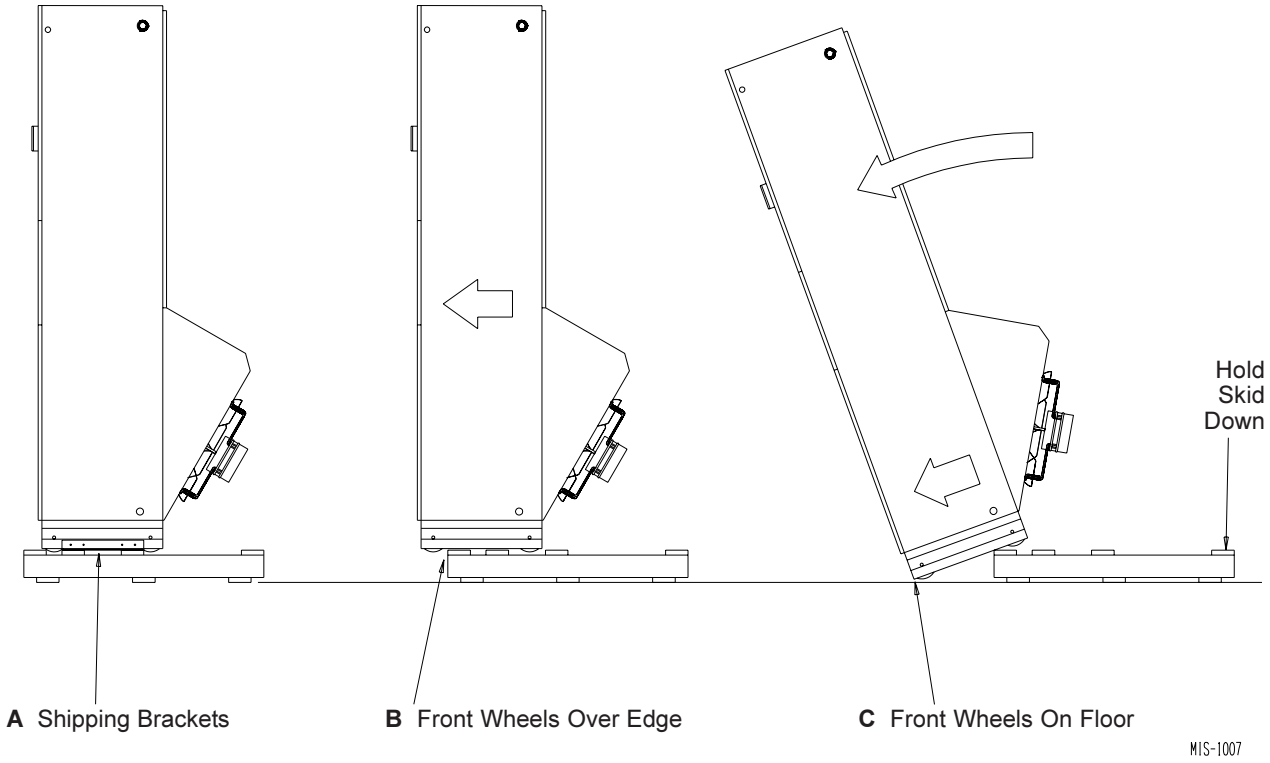

HANDLING UNIT AFTER REMOVAL FROM SKID

⚠ WARNING

Exercise extreme caution when pushing the unit on the rollers. Handle and push from the lower 1/3 of the unit. Insure that debris is not on the floor where the unit is to be moved on the rollers. Failure to do so could result in the unit tipping over and causing bodily injury and/ or damage to the unit.

The unit will have to be turned sideways and removed from the skid to fit through a 36" doorway. If the door height allows, the unit can be slid sideways through the door.

If the unit can not be slid through the door, then the unit will have to be put on a cart and tipped down to roll through the door. It is recommended that an appliance cart be used with a strap to hold the unit on the cart. The wheels of the unit ***must be locked***. If the wheels were allowed to roll, the unit could roll off the cart. ***The unit should always be carted from the left side***. This is the side where the compressor is located. See Figure 4.

FIGURE 4
UNIT ON APPLIANCE CART

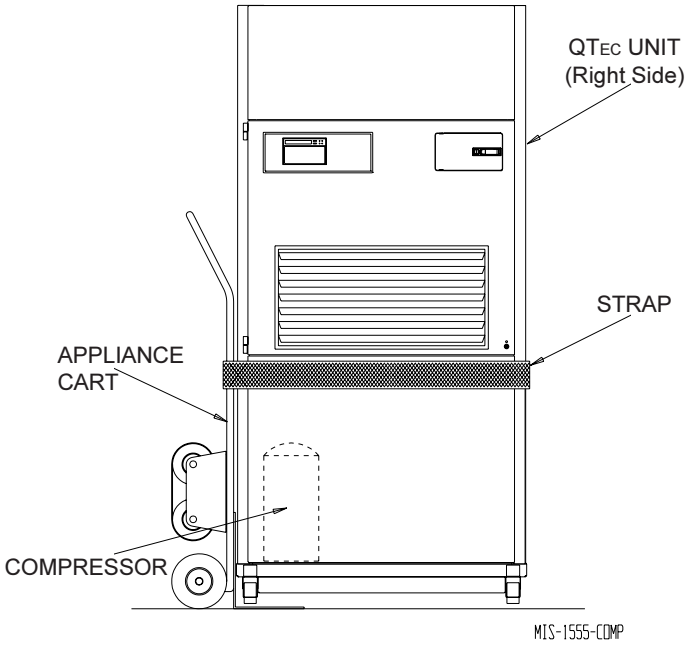

The blade of the appliance cart should be slid under the wheels of the unit. The strap of the appliance cart should be placed around the unit and strapped tightly. Help will be required to tip the unit back onto the cart. The unit can be leaned far enough back to be rolled through the door. Be careful when setting the unit back up to keep from damaging the unit.

GENERAL

The equipment covered in this manual is to be installed by trained, experienced service and installation technicians.

A QWS-Series wall sleeve supplied as a separate accessory must be ordered and installed with QTec unit.

The unit is designed for use with or without duct work. For use without duct work, Plenum Box QPB42 is recommended.

These instructions explain the recommended method to install the air cooled self-contained unit and the electrical wiring connections to the unit.

These instructions and any instructions packaged with any separate equipment required to make up the entire air conditioning system should be carefully read before beginning the installation. Note particularly “Start Procedure” and any tags and/or labels attached to the equipment.

While these instructions are intended as a general recommended guide, they do not supersede any national and/or local codes in any way. Authorities having jurisdiction should be consulted before the installation is made. See Page 3 for information on codes and standards.

Size of unit for a proposed installation should be based on heat loss calculation made according to methods of Air Conditioning Contractors of America (ACCA). The air duct should be installed in accordance with the Standards of the National Fire Protection Systems of Other Than Residence Type, NFPA No. 90A, and Residence Type Warm Air Heating and Air Conditioning Systems, NFPA No. 90B. Where local regulations are at a variance with instructions, installer should adhere to local codes.

MINIMUM INSTALLATION HEIGHT

The minimum installation height of the unit with a Free Blow Plenum is 8 ft. 6 in. This provides enough clearance for the plenum to be removed. See Figure 5.

The minimum installation height for ducted applications is 8 ft. 4½ in. This provides enough clearance to install the duct work. See Figure 6.

FIGURE 5
INSTALLATION WITH FREE BLOW PLENUM

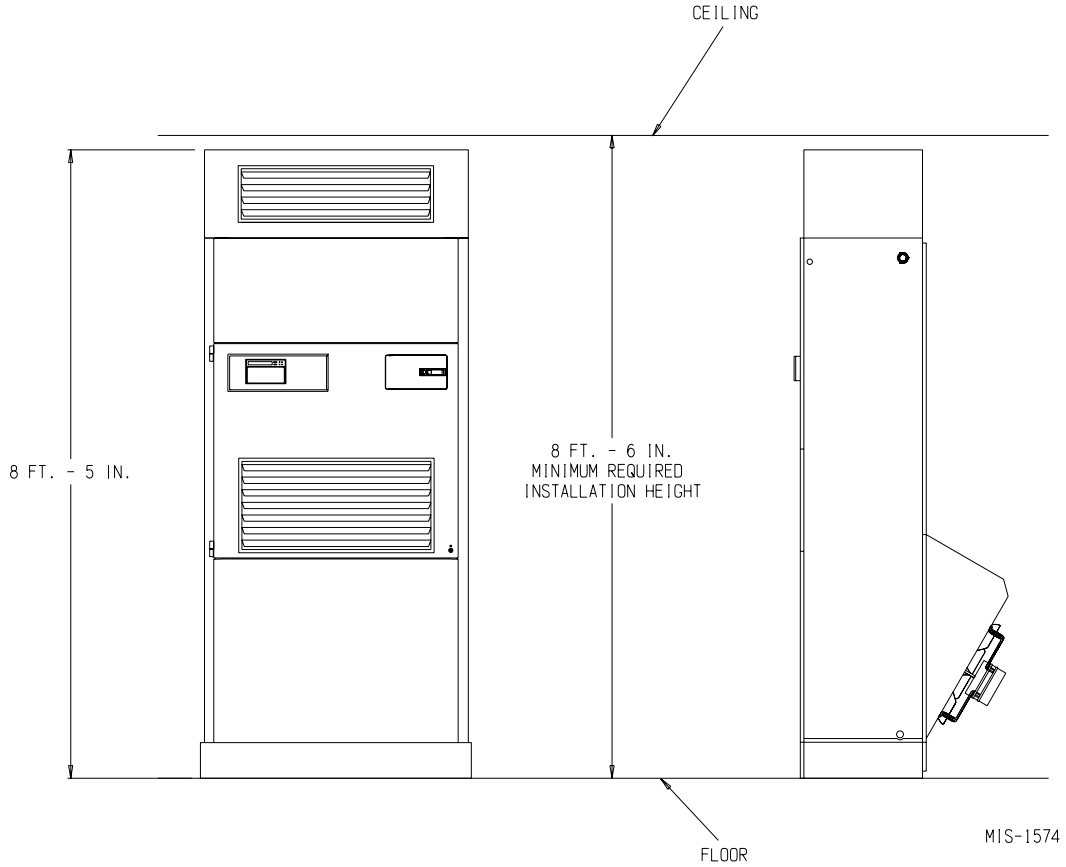

FIGURE 6
DUCTED APPLICATION

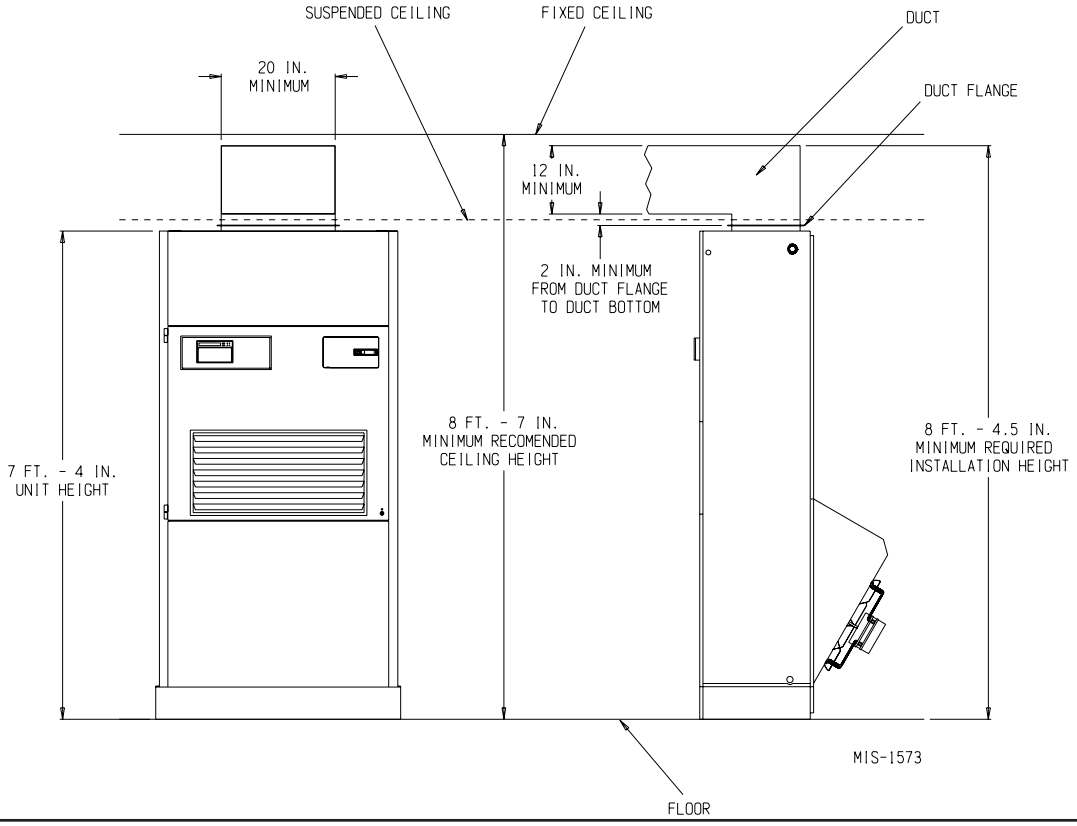

DUCT WORK

Any heat pump is more critical of proper operating charge and an adequate duct system than a straight air conditioning unit. All duct work must be properly sized for the design airflow requirement of the equipment. Air Conditioning Contractors of America (ACCA) is an excellent guide to proper sizing. All duct work or portions thereof not in the conditioned space should be properly insulated in order to both conserve energy and prevent condensation or moisture damage. When duct runs through unheated spaces, it should be insulated with a minimum of one inch of insulation. Use insulation with a vapor barrier on the outside of the insulation. Flexible joints should be used to connect the duct work to the equipment in order to keep the noise transmission to a minimum.

The QTEC series heat pump has provision to attach a supply air duct to the top of the unit. Duct connection size is 12 inches x 20 inches. The duct work is field supplied and must be attached in a manner to allow for ease of removal when it becomes necessary to slide the unit out from the wall for service. See Figure 7 for suggested attachment method.

FIGURE 7
SUPPLY DUCT CONNECTIONS

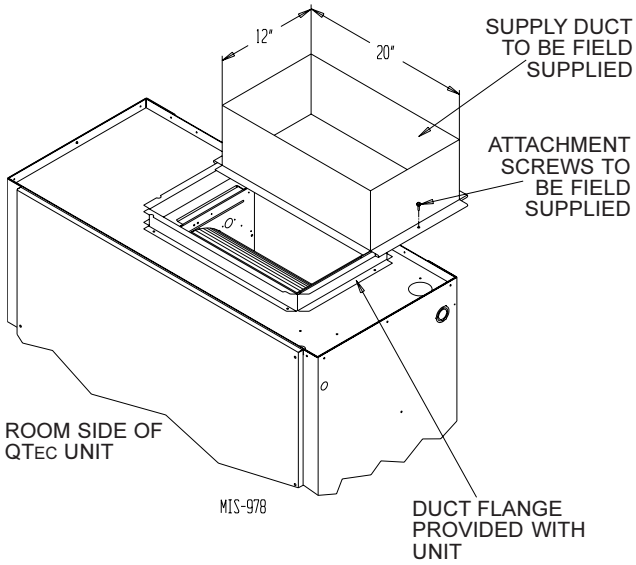

NOTE: Unit cabinet, supply air duct and free blow plenum are approved for "0" clearance to combustible material.

The QTEC series heat pumps are designed for use with free return (non-ducted) and either free blow with the use of QPB Plenum Box or a duct supply air system.

The QPB and QPBHW Plenum Box mounts on top of the unit and has both vertically and horizontally adjustable louvers on the front discharge grille.

For hot water coil option a QPBHWxx-F for free blow or QPBHWxx-D for ducted airflow is used.

When used with a ducted supply, a QCX Cabinet Extension can be used to conceal the duct work above the unit to the ceiling. This extends 20" above the unit for a total height above the floor of 10'-7/8". The unit is equipped with a variable speed indoor blower motor which increases in speed with an increase in duct static pressure. The unit will therefore deliver proper rated airflow up to the maximum ESP shown in Table 9. However, for quiet operation of the air system, the duct static should be kept as low as practical, within the guidelines of good duct design.

FILTERS

Two 1-inch throw away filters [(1) 16x16 and (1) 16x20] are supplied with each unit. The filters slide into filter brackets. Refer to Figure 8.

The filters are serviced from the inside of the building by opening the hinged door. This door is attached by 1/4 turn fasteners and one locking latch.

The internal filter brackets are adjustable to accommodate 2-inch filters. The tabs for the 1-inch filters must be bent down to allow the 2-inch filters to slide in place.

FIGURE 8
FILTER LOCATION

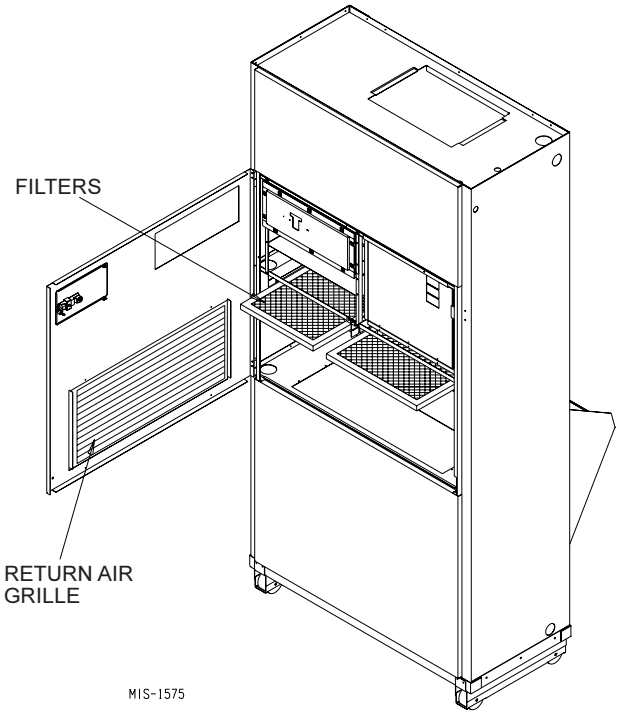

FRESH AIR INTAKE

This unit is equipped with a fresh air damper assembly. The damper blade is locked in the closed position when the unit is shipped from the factory. To allow the damper to operate, remove the two plastic locking pins, one on each end of the blade. This will allow for maximum fresh airflow. The damper blade will now open when the indoor blower is operating. If less than maximum fresh airflow is required, reinsert the plastic pins to limit damper blade opening to desired level. Two extra pins are provided (taped to the inside of the assembly) which may be used to hold the blade in some position other than minimum or maximum position. This fresh air assembly is located in the rear of the unit and to gain access to make these adjustments remove the air filter service door.

All capacity, efficiency and cost of operation information as required for Department of Energy "Energyguide" Fact Sheets are based upon the fresh air blank-off plate in place and is recommended for maximum energy efficiency.

The blank-off plate is available upon request from the factory and is installed in place of the fresh air damper shipped with each unit.

For details on energy recovery ventilation see Page 31 for details.

SERVICE LIGHT

The unit is equipped with a service light which signals the user that service is required. The light is located in the upper control panel and is visible only when the hinged service/filter access door is open.

The ***Service Unit*** light indicates that the unit has been shut off by a high or low pressure device. This indicates that the unit needs to be serviced. See Page 29 for details.

CONDENSATE DRAIN

There are two drain connections on the unit. The rear drain is the primary drain, and is located on the right lower rear panel of the unit. The optional side drain is located on the bottom right side of the unit. The side drain is shipped with a plug installed.

The ***side drain*** requires a water trap for proper drainage. See Figure 9. The drain can be routed through the floor or through the wall. ***If the drain is to be routed through an unconditioned space, it must be protected from freezing.*** The drain line must be able to be removed from the unit if it is necessary to remove the unit from the wall. When the side drain is used, the plug must be removed and installed in the rear drain outlet.

The ***rear drain*** can be used with wall thickness of up to 10 inches where a water trap can be installed between the unit and the interior wall. See Figure 10. The trap cannot extend beyond the edge of the unit or it will interfere with the wall mounting bracket. The drain can be routed through the floor or through the wall. If the drain is routed through the wall, the drain line must be positioned such that it will not interfere with the sleeve flange or the grille. See Figure 11. ***If the drain is to be routed through an unconditioned space, it must be protected from freezing.***

OPTIONAL REAR DRAIN KITS

Optional Rear Drain Kit, Bard Model QCDS48A, is also available for these products. The optional rear drain kit offers multiple benefits that include the following:

- Allows unit to be rolled away from the sleeve without having to disconnect any hard plumbing connections.
- Allows indoor coil condensate to be easily connected to Rear Drain Box while bypassing the outdoor coil drain pan. This aids in minimizing the potential for biological growth to occur by minimizing the standing water and exposing it to warm temperatures.

See Figures 12A, 12B, 12C and 12D.

The drain box permanently mounts onto the wall sleeve and is then either piped directly outdoors, or can be piped vertically. The Q/Tec unit is then equipped with fittings on the rear of the unit that slide into the drain box as it is wheeled towards the wall sleeve.

NOTE: *On models equipped with a refrigerant subcooler in the lower drain pan may experience a 2-3% decrease in cooling performance and efficiency when the indoor condensate is routed around the outdoor coil drain pan/subcooler assembly. Unit rated performance and efficiency are with the indoor condensate routed to the outdoor coil pan.*

There is also a heated version of the rear drain box available (Model #QCDS48H) for installation in northern climates where freezing may occur.

FIGURE 9
OPTIONAL SIDE DRAIN (SIDE VIEW) INSTALLATION

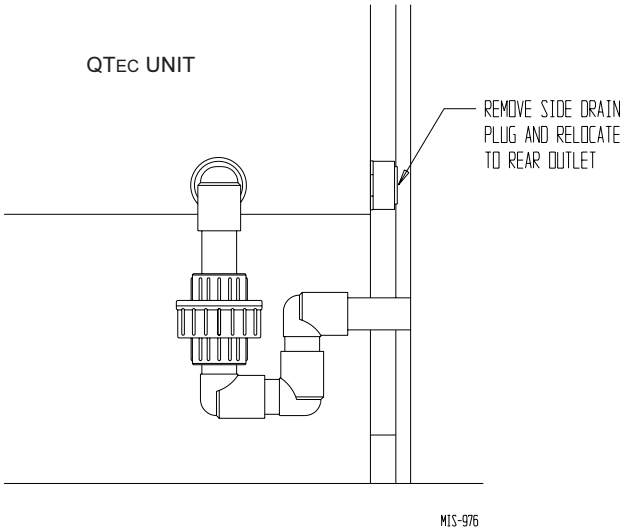

FIGURE 10
STANDARD REAR DRAIN

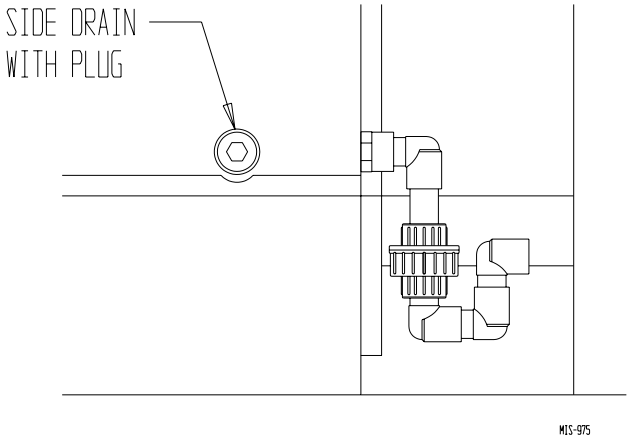

FIGURE 11
REAR DRAIN (TOP VIEW)

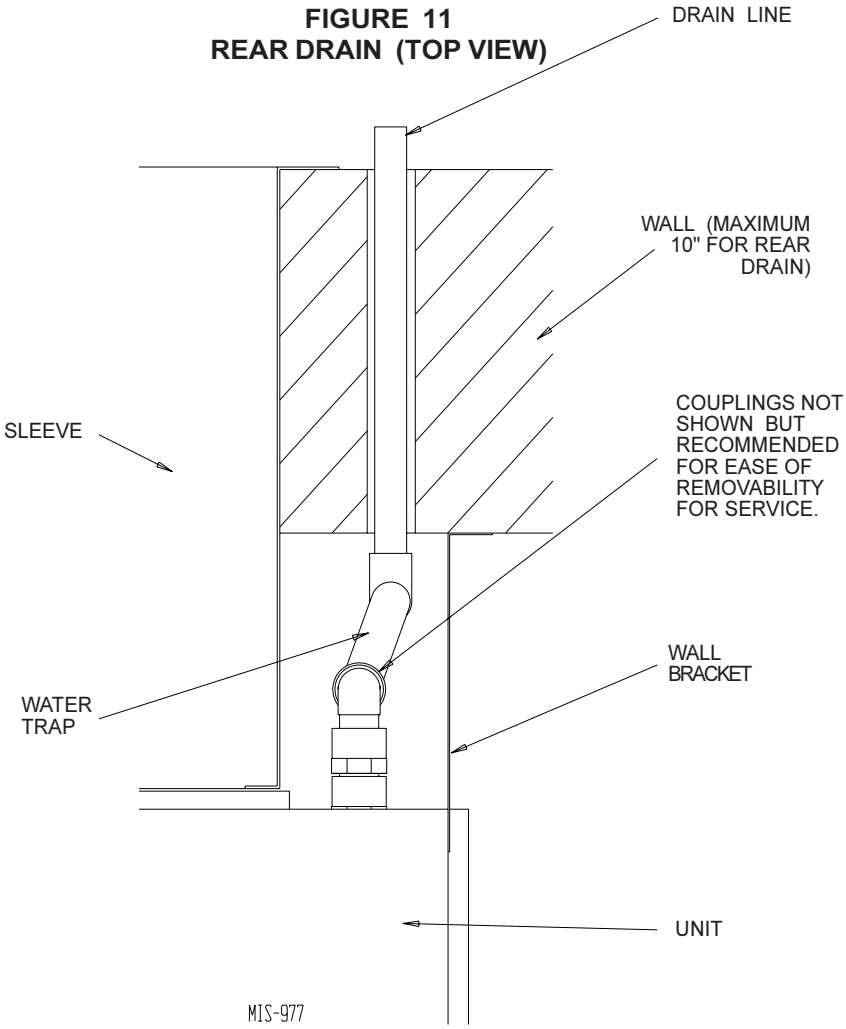

FIGURE 12A

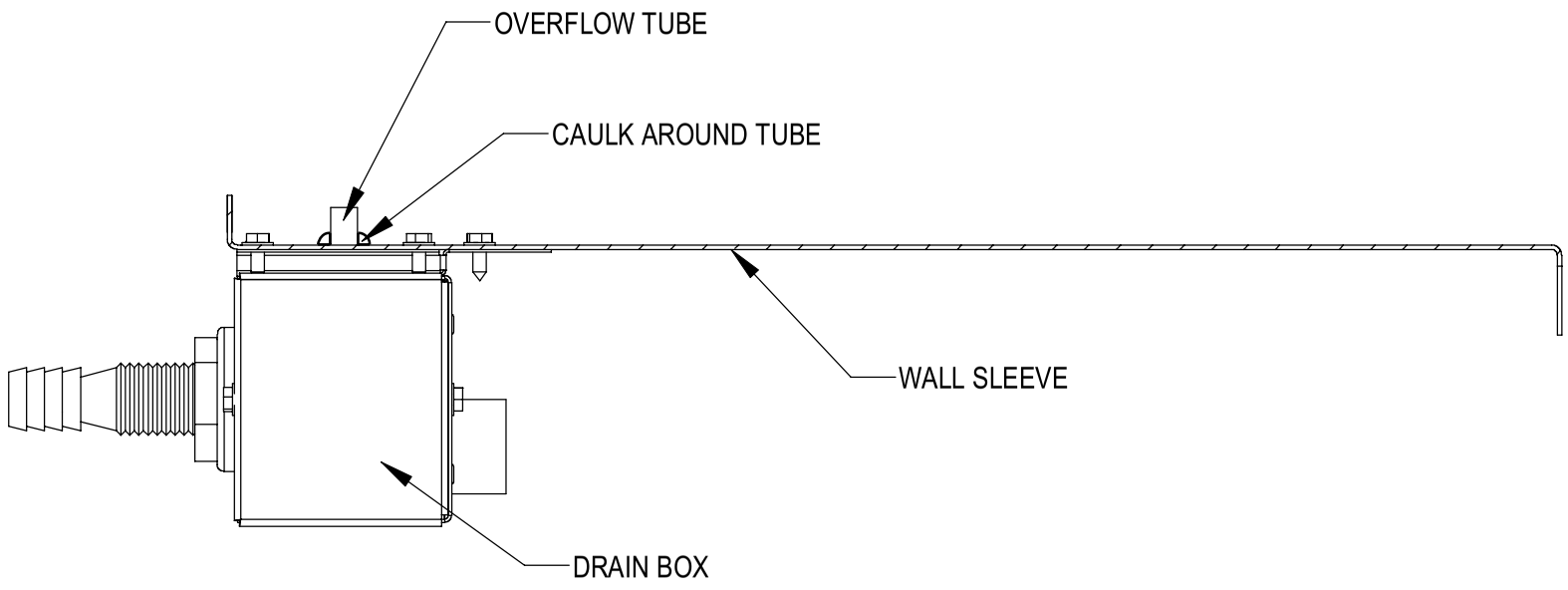

MIS-2469

FIGURE 12B

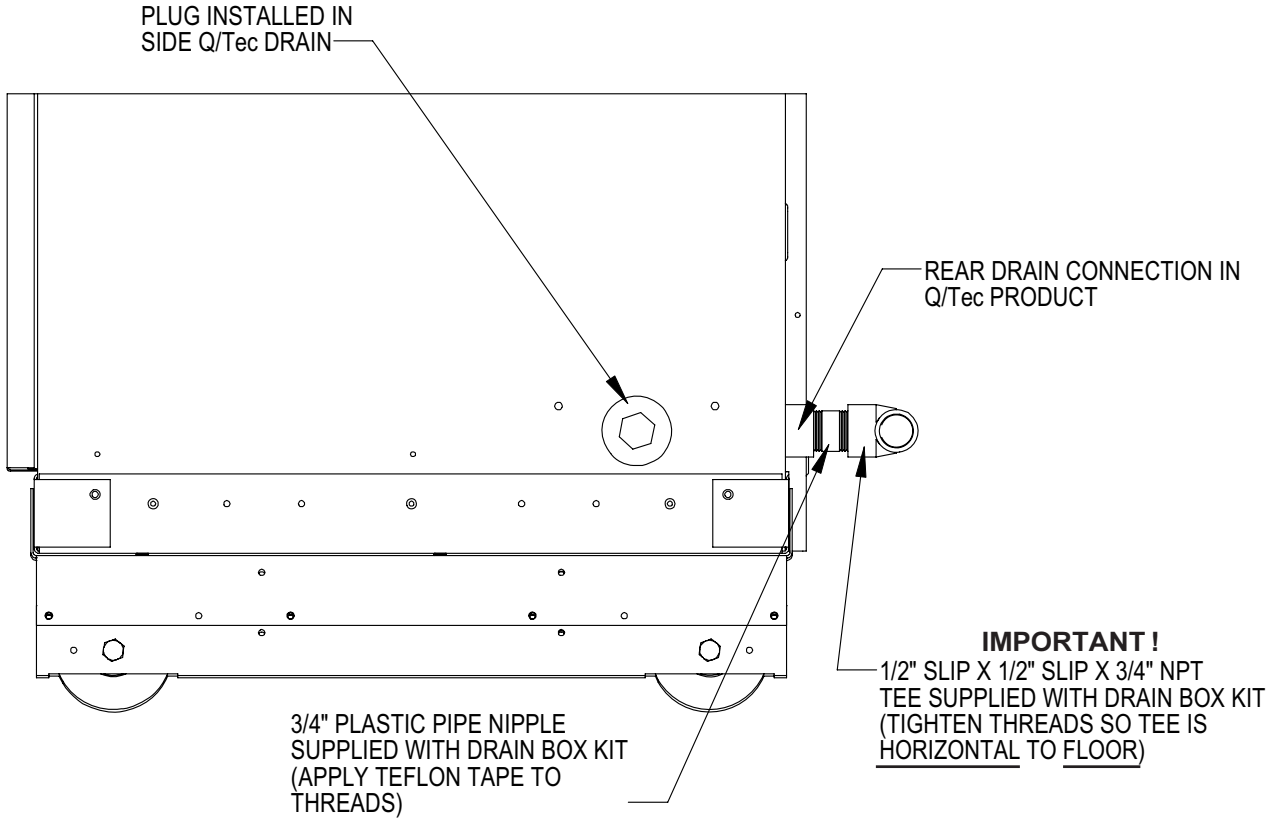

MIS-2470

FIGURE 12C

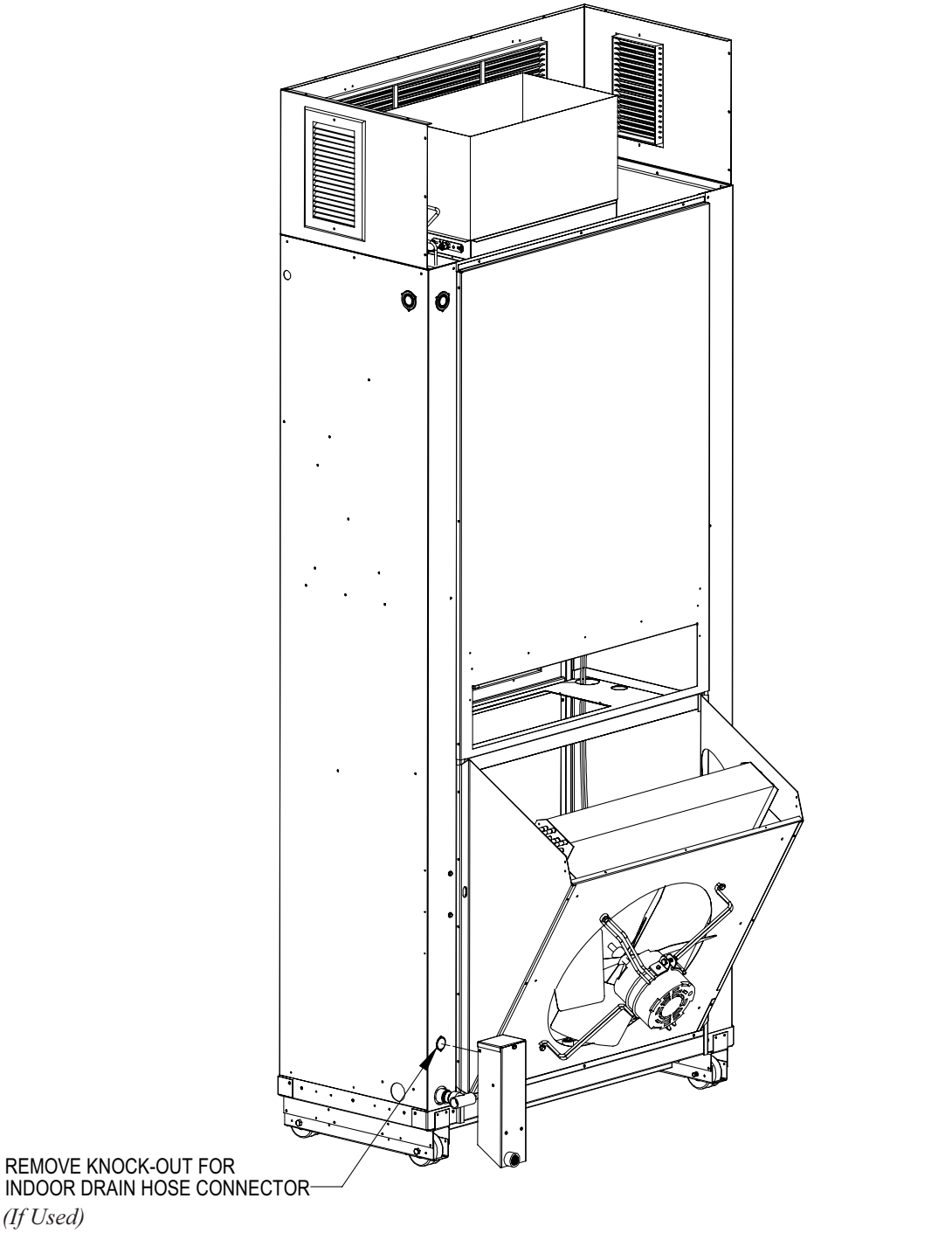
REMOVE KNOCK-OUT FOR
INDOOR DRAIN HOSE CONNECTOR
(If Used)
MIS-2471

FIGURE 12D

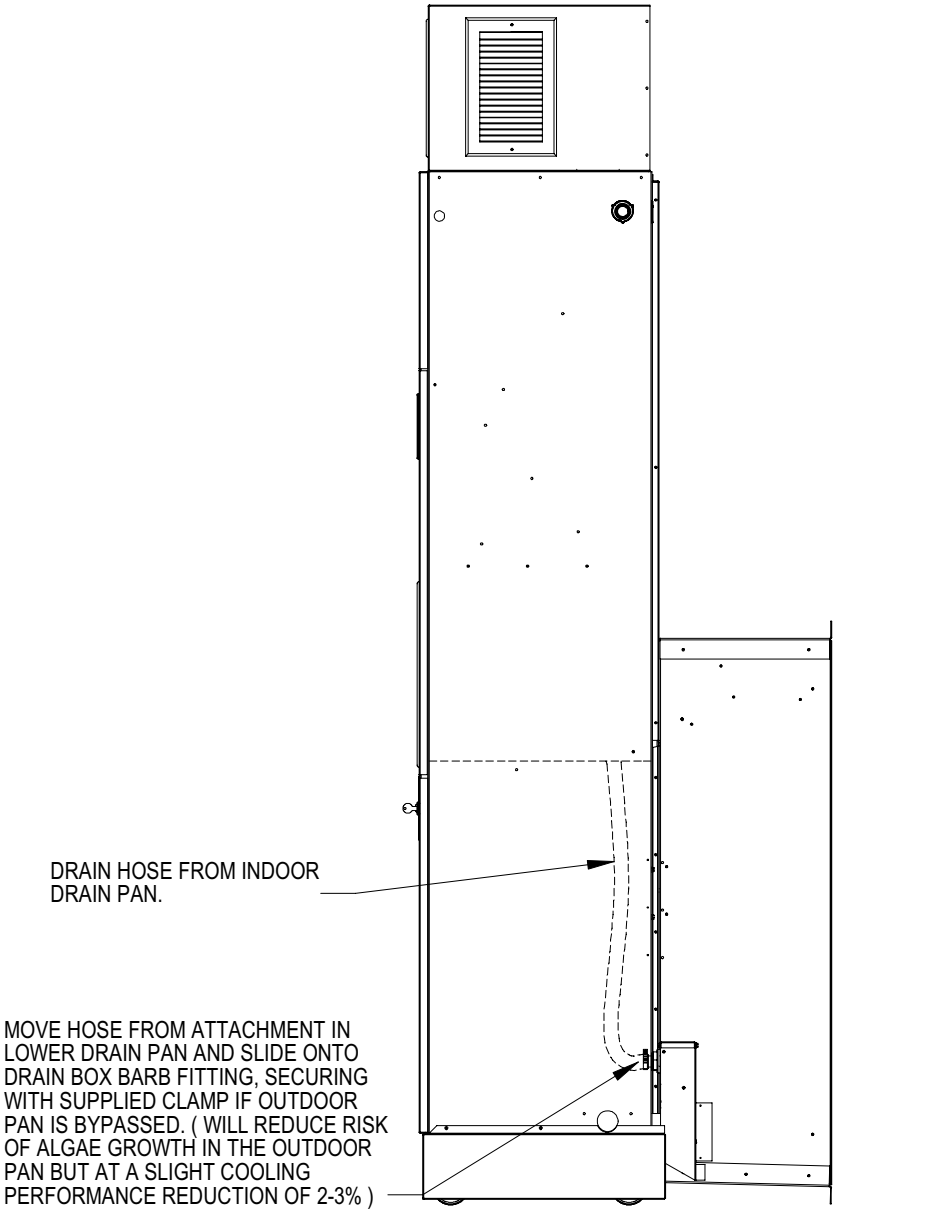

MIS-2472

FIGURE 13A
UNIT MOUNTING - Method 1

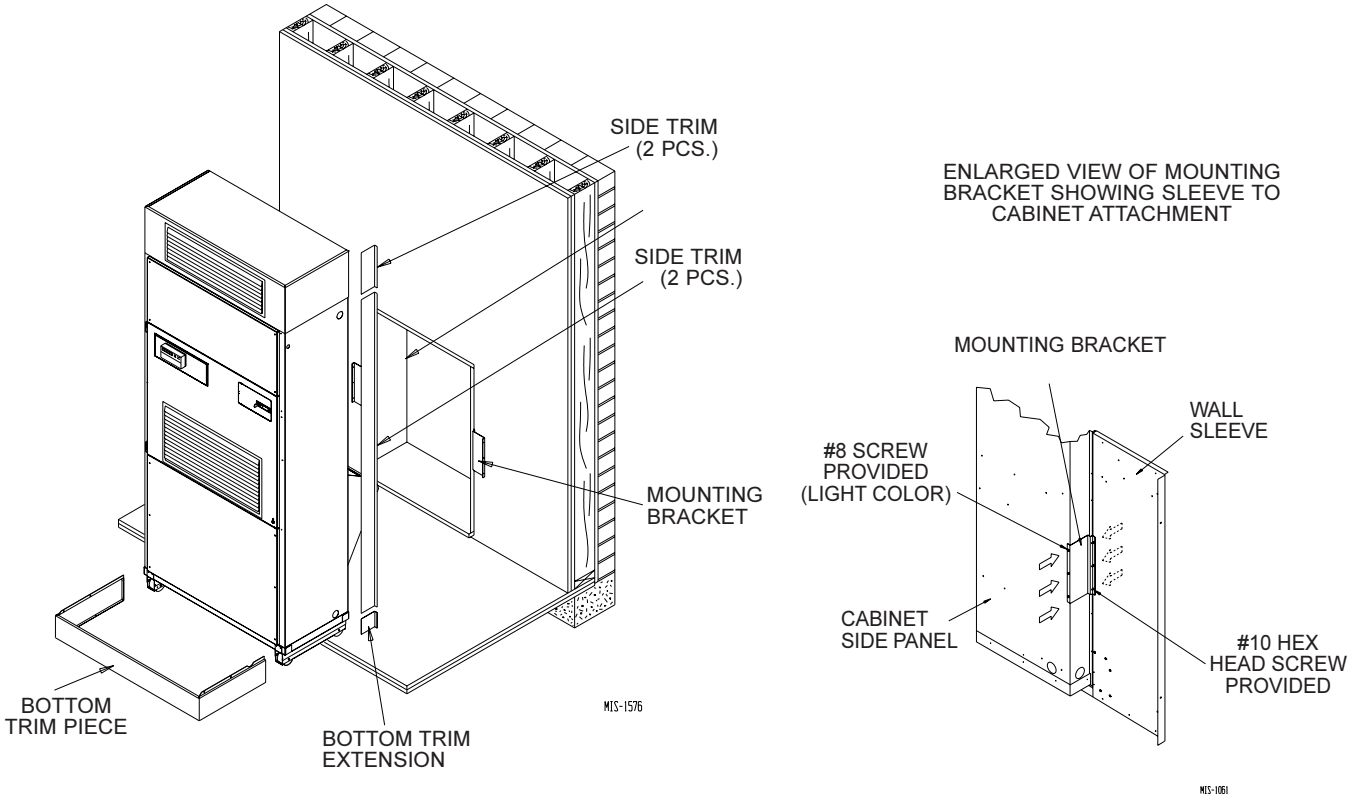

FIGURE 13B
UNIT MOUNTING - Method 2

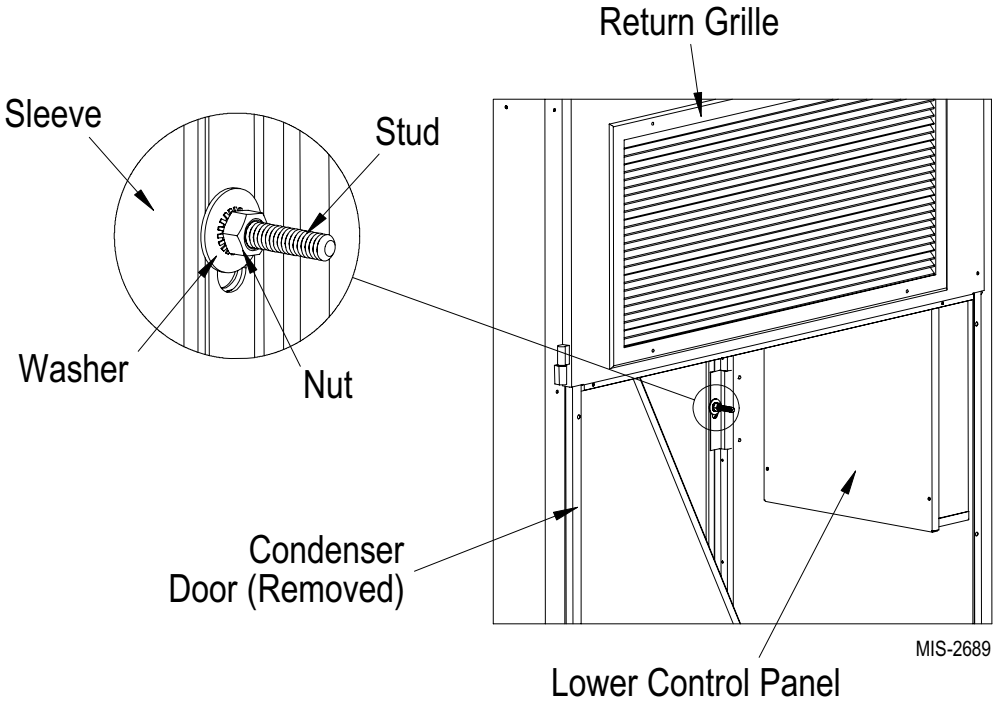

MOUNTING THE UNIT

When installing a QTEC unit near an interior wall on the left side, a minimum of 8 inches is required; 12 inches is preferred.

When installing a QTEC unit near an interior wall on the right side, a minimum of 18 inches is required as additional space is required to connect the side drain. If the rear condensate drain kit QCDS48 is used the minimum can be reduced to 8 inches.

This clearance is required to allow for the attachment of the unit to the sleeve and side trim pieces to the wall.

This unit is to be secured to the wall sleeve with mounting brackets provided. The unit itself, the supply duct and the free blow plenum are suitable of "0" clearance to combustible material.

Following are the steps for mounting the QTEC. For reference see Figure 13A for external mounting bracket or 13B for internal bolt secured bracket (recommended).

1. Attach mounting brackets to the wall sleeve with screws provided. Either use external mounting bracket (Fig. 13A) or internal bolt bracket (Fig. 13B).
2. Position the unit in front of the sleeve with the condenser section toward the sleeve.
3. Remove the locking screws from the wheels. Refer to Figure 14.
4. Roll the unit into the sleeve. Make sure to check both sides of the unit as it is being rolled to keep it centered in the sleeve. Also check the alignment to the mounting brackets. This unit must be level from side to side. If adjustments are necessary, shim up under the rollers with sheets of steel or any substance that is not affected by moisture.
5. Make sure the gasket on the rear of the unit is touching the sleeve across the top and down both sides. This is a rain water seal.
6. Secure the mounting brackets to the unit with screws provided, #10 hex head sheet metal screws (Figure 13A) or use nut and washer to secure sleeve (Figure 13B).
7. Bottom trim extensions are provided for use when wall is less than 14 inches but greater than 10.5 inches. Secure to wall with screws (not provided).
8. Attach the bottom trim piece to the unit with the screws provided (dark colored).
9. Position side trim pieces to wall and attach with field supplied screws. There are two long pieces and two short pieces supplied. The long pieces are to enclose the gap behind the unit. The short pieces are to fill the gap behind the cabinet extension or the free blow plenum box. They may be cut to suit your ceiling height or overlap the unit side trim. There is sufficient length to trim up to a 10'2" ceiling.

NOTE: If the exterior wall thickness is between 5 inches to 10.5 inches, a side trim extension piece kit, model QSTX42, is available.

FIGURE 14
REMOVING LOCKING SCREWS FROM WHEELS

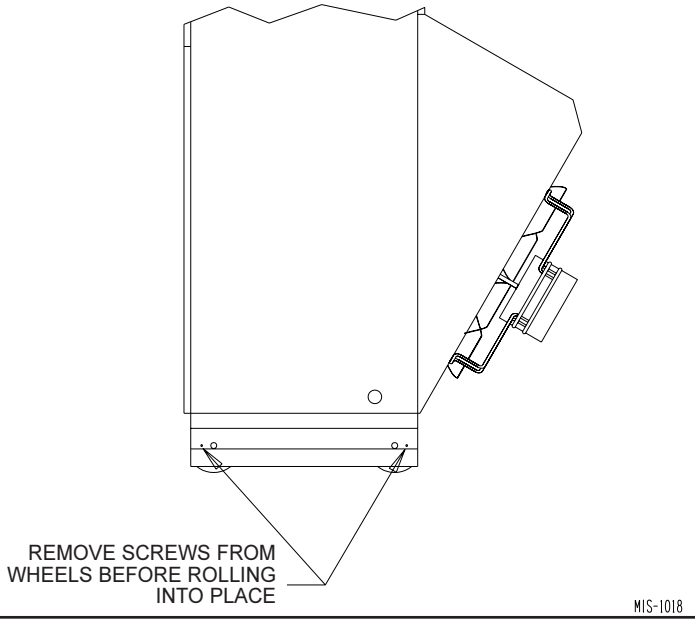

WIRING – MAIN POWER

Refer to the unit rating plate and/or Table 2/2A for wire sizing information and maximum fuse or "HACR Type" circuit breaker size. Each unit is marked with a "Minimum Circuit Ampacity". This means that the field wiring used must be sized to carry that amount of current. Depending on the installed KW of electric heat, there may be two field power circuits required. If this is the case, the unit serial plate will so indicate. All models are suitable only for connection with copper wire. Each unit and/or wiring diagram will be marked "Use Copper Conductors Only". These instructions ***MUST BE*** adhered to. Refer to the National Electrical Code (NEC) for complete current carrying capacity data on the various insulation grades of wiring material. All wiring must conform to NEC and all local codes.

The electrical data lists fuse and wire sizes (75°C copper) for all models, including the most commonly used heater sizes. Also shown are the number of field power circuits required for the various models with heaters.

The unit rating plate lists a "Maximum Time Delay Relay Fuse" or "HACR Type" circuit breaker that is to be used with the equipment. The correct size must be used for proper circuit protection, and also to assure that there will be no nuisance tripping due to the momentary high starting current of the compressor motor.

FIGURE 15
COMPONENT LOCATION

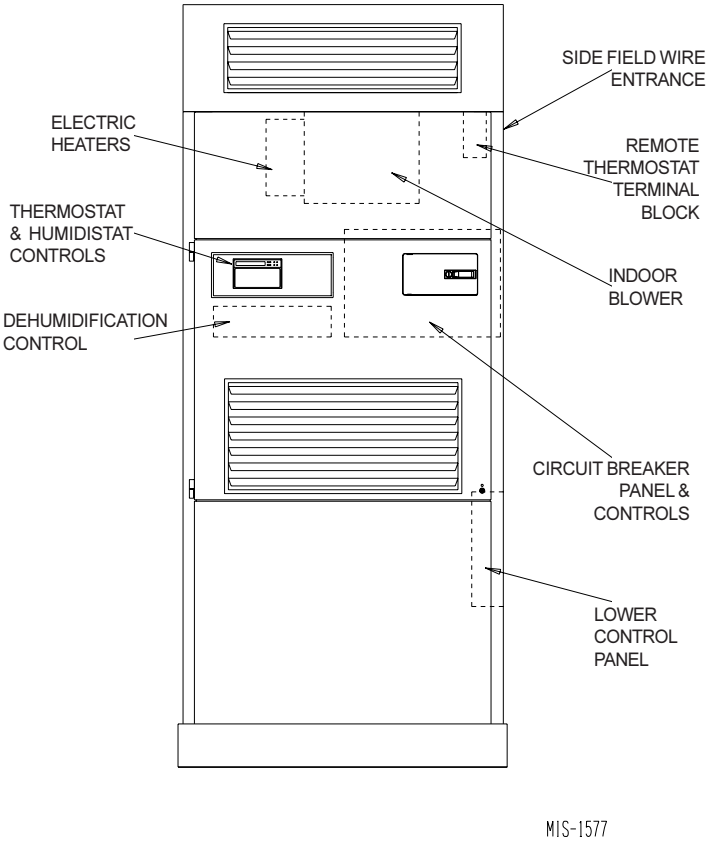

The disconnect access door on this unit may be locked to prevent unauthorized access to the disconnect.

See Start Up section for information on three phase scroll compressor start-ups.

The field wiring connections are located behind the top and hinged panel in the circuit breaker panel. See Figure 15.

WIRING – LOW VOLTAGE WIRING

230/208V, 1 PHASE AND 3 PHASE EQUIPMENT DUAL PRIMARY VOLTAGE TRANSFORMERS.

All Equipment leaves the factory wired on 240V tap. For 208V operation, reconnect from 240V to 208V tap. The acceptable operating voltage range for the 240 and 208V taps are as noted in Table 3.

TABLE 3
OPERATING VOLTAGE RANGE

TAP	RANGE
240V	253 – 216
208V	220 – 187

NOTE: The voltage should be measured at the field power connection point in the unit and while the unit is operating at full load (maximum amperage operating condition).

The standard Climate Control ***Option X*** is a remote thermostat connection terminal block. See Figure 17 for wiring diagram. Compatible thermostats are listed in Table 4.

The Climate Control ***Option E*** is an electronic, programmable thermostat and a humidistat. The sub base of the thermostat and the humidistat are factory wired to the front panel of the unit. See Figure 19 for wiring diagram. Compatible for use with Energy Recovery Ventilator or Ventilator.

The Climate Control ***Option G*** is an electronic, non-programmable thermostat and humidistat. The subbase of the thermostat is factory wired to the front panel of the unit. This option is compatible for use with the optional CS2000A* Energy Control Monitor and a terminal block is provided for connection to the CS2000A*. See Figure 20 for wiring diagram. Compatible for use with Energy Recovery Ventilator or Ventilator.

The Climate Control ***Option I*** is an electronic, programmable thermostat, humidistat and a CO_2 controller. The subbase of the thermostat and CO_2 controller are factory wired to the front panel of the unit. See Figure 21 for wiring diagram.

NOTE: On options X and G the CS2000A (or other field provided means to control ventilation) must be used if any of the mechanical (motorized) ventilation options are installed.*

LOW VOLTAGE CONNECTIONS

These units use a grounded 24 volt AC low voltage circuit.

The *"R"* terminal is the *hot* terminal and the *"C"* terminal is *grounded.*

"G" terminal or pin 6 of P4 is the *fan input*.

"Y" terminal or pin 7 of P4 is the *compressor input*.

"B" terminal or pin 8 of P4 is the *reversing valve input*. The reversing valve must be energized for heating mode.

"R" terminal or pin 10 of P4 is *24 VAC hot*.

"C" terminal or pin 11 of P4 is *24 VAC grounded.*

"L" terminal or pin 12 of P4 is *compressor lockout* **output**. This terminal is activated on a high or low pressure trip by the electronic heat pump control. This is a 24 VAC output.

"W2" terminal or pin 9 of P4 is *second stage heat* (if equipped). If the unit is equipped with an optional hot water coil plenum box the water valve will be connected to this terminal.

"O1" terminal of pin 5 of P4 is the *ventilation input*. This terminal energizes any factory installed ventilation option.

"E" terminal or pin 3 of P4 is the *emergency heat input.* This terminal energizes the emergency heat relay.

NOTE: For total and proper control using DDC, a total of 7 controlled outputs are required (6 if no ventilation system is installed). For proper system operation under Emergency Heat conditions where the compressor needs to be deactivated, the B-W2-E outputs need to be energized. Removing the Y (compressor) signal alone turns the compressor off, but does not activate the additional circuitry embedded in the heat pump for proper and complete operation.

"5" terminal or pin 2 of P4 is the *24 dehumidification circuit.*

"4" terminal of pin 4 or P4 is the *dehumidification circuit*. A contact ***must*** connect terminals 4 and 5.

"6" terminal of pin 1 of P4 is *VAC grounded to the humidistat*, if needed.

LOW VOLTAGE CONNECTIONS FOR DDC CONTROL

Fan Only	Energize G
Cooling Mode	Energize Y, G
Heat Pump Heating	Energize Y, G, B
2nd Stage Heating (if employed)	Energize G, W2, Y, B
Ventilation	Energize G, O1
Dehumidification	Connect 4 & 5
Emergency Heat	Energize B, W2, E, G

GENERAL

This unit is equipped with a variable speed ECM motor. The motor is designed to maintain rated airflow up to the maximum static allowed. ***It is important that the blower motor plugs are not plugged in or unplugged while the power is on. Failure to remove power prior to unplugging or plugging in the motor could result in motor failure.***

⚠ CAUTION

Do not plug in or unplug blower motor connectors while the power is on. Failure to do so may result in motor failure.

TABLE 4
WALL THERMOSTATS

Thermostat	Predominant Features
8403-056 (C7232A1008)	Carbon Dioxide Sensor with LCD for Sensor Readings
8403-058 (TH5220D1151)	2 stage Cool; 2 stage Heat Electronic Non-Programmable HP or Conventional Auto or Manual changeover
8403-060 (1120-445)	3 stage Cool; 3 stage Heat Programmable/Non-Programmable Electronic HP or Conventional Auto or Manual changeover

FIGURE 16

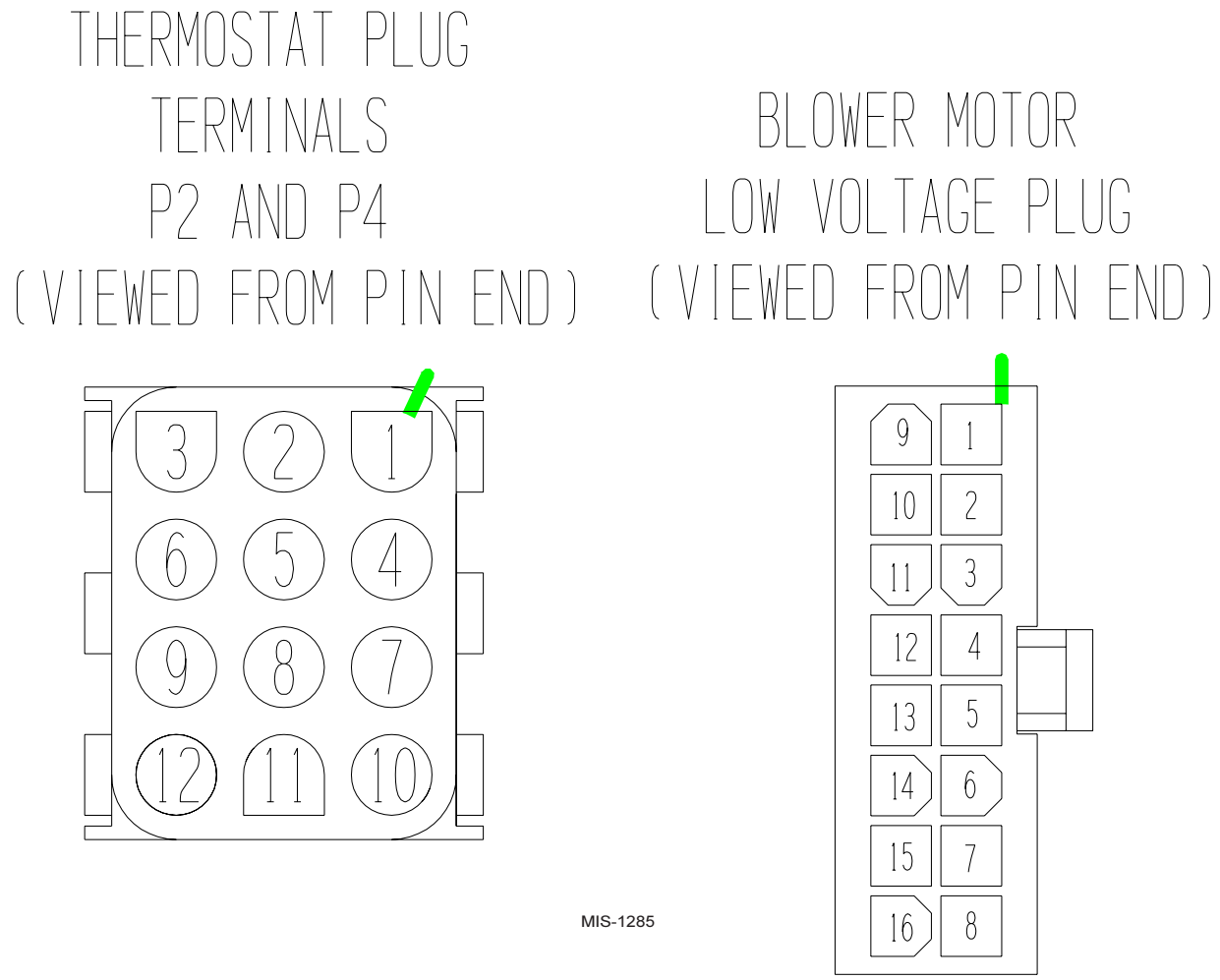

FIGURE 17

Dehumidification Wiring Diagram With "X" Thermostat Option

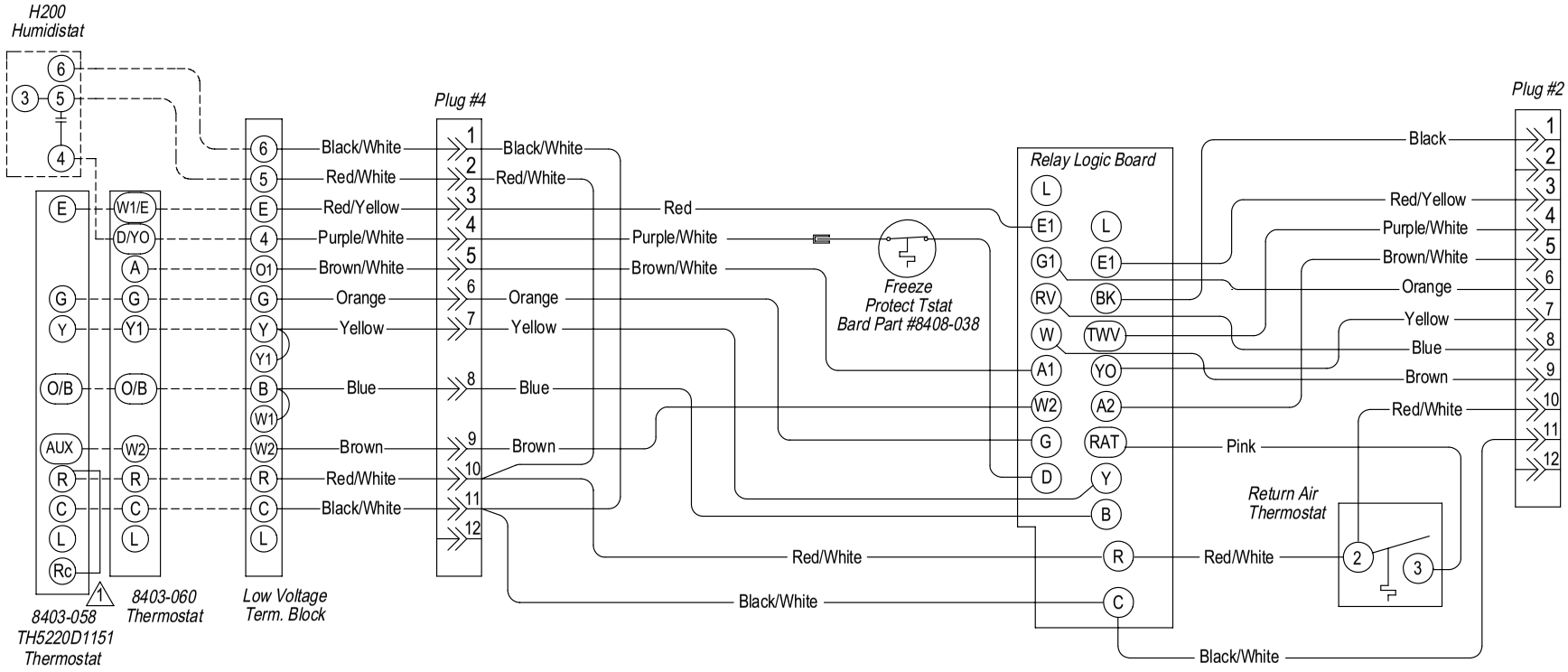

1 FACTORY INSTALLED JUMPER

4102-063 A

FIGURE 18

Dehumidification Wiring Diagram With "X" Thermostat Option And Demand Ventilation

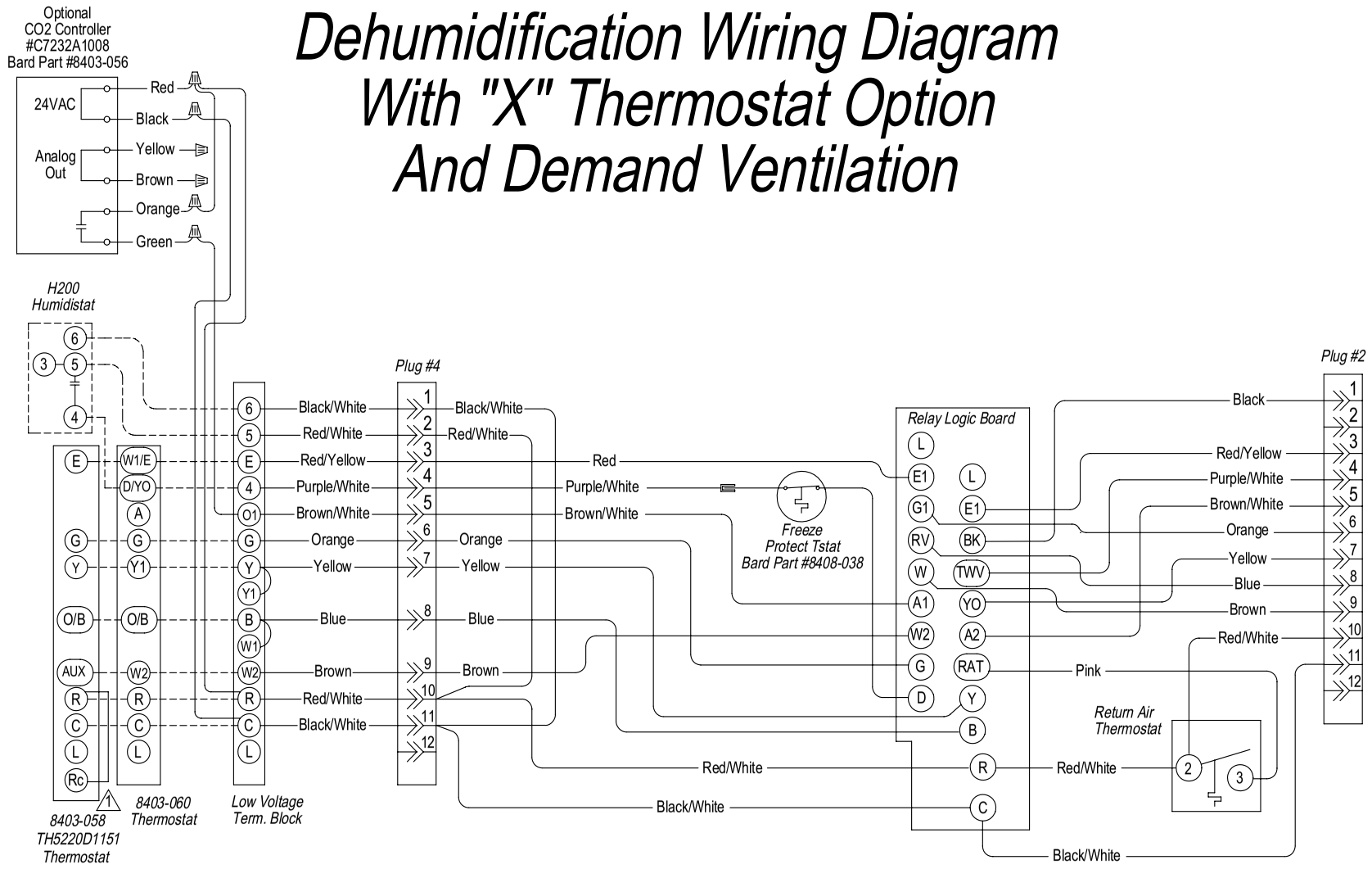

MIS-2690 A

⚠ FACTORY INSTALLED JUMPER

FIGURE 19

QH Dehumidification Wiring Diagram With "X" Thermostat Option, CO_2 Controller, CS2000A2 and WERV Ventilation Option

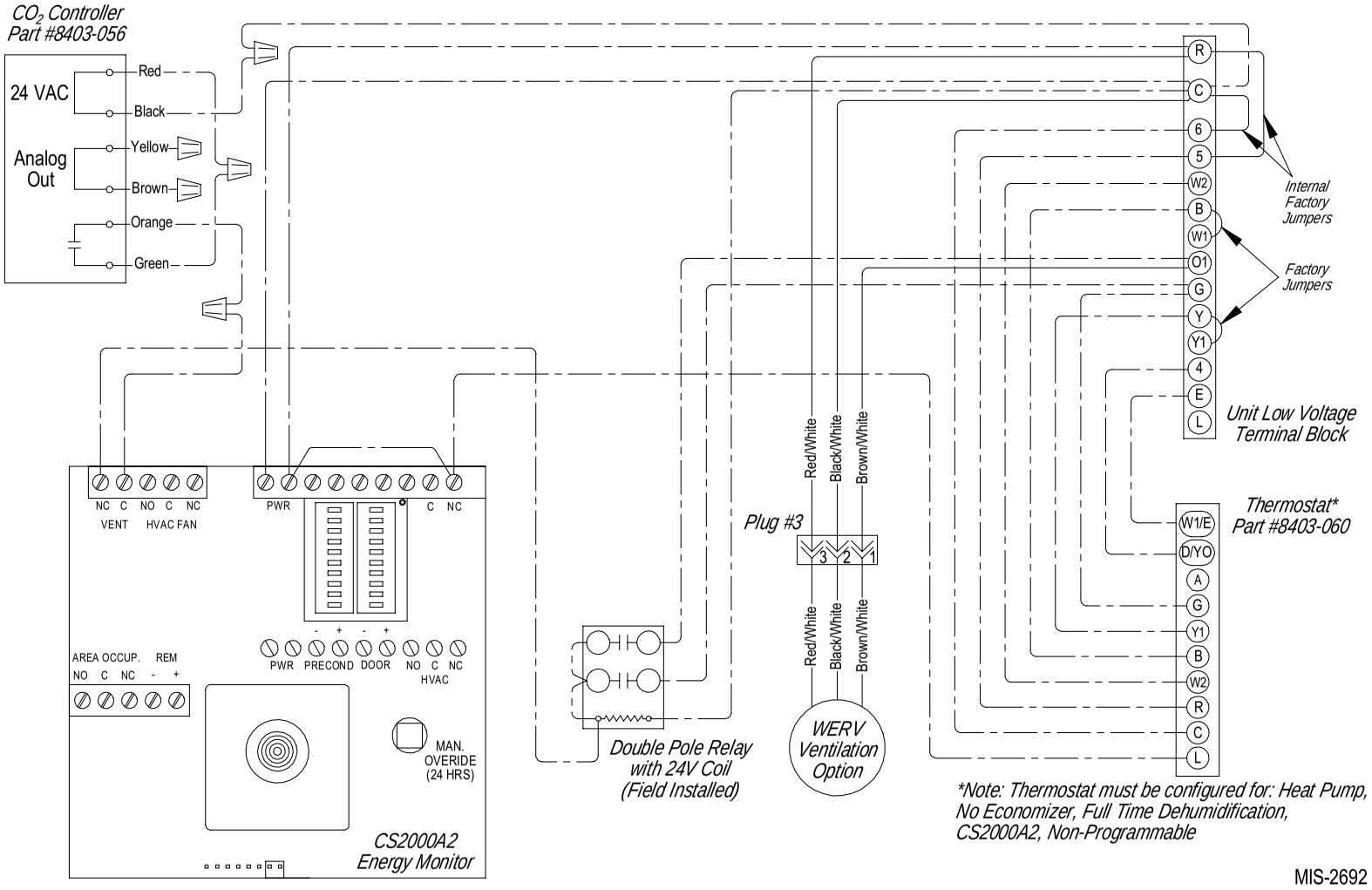

FIGURE 20

Dehumidification Wiring Diagram With "E" Thermostat Option

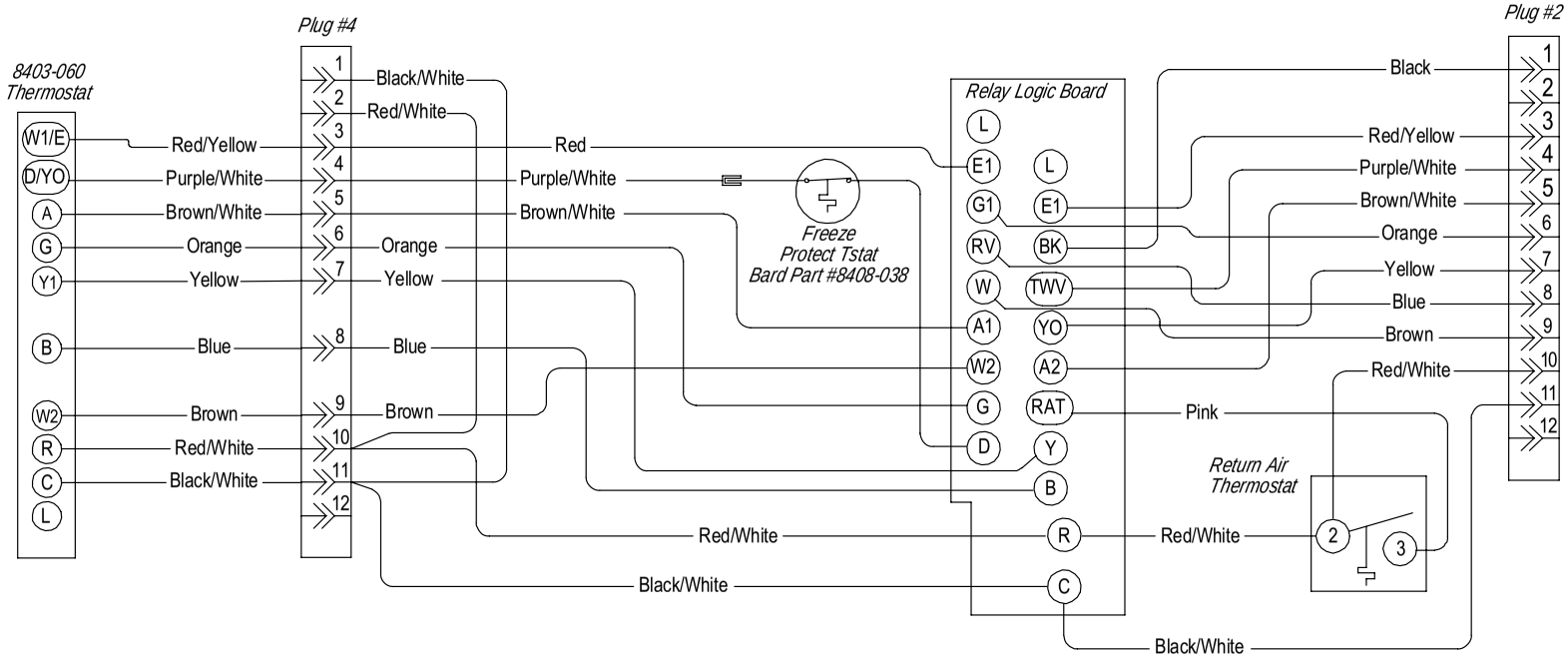

4102-064

FIGURE 21

Dehumidification Wiring Diagram With "G" Thermostat Option

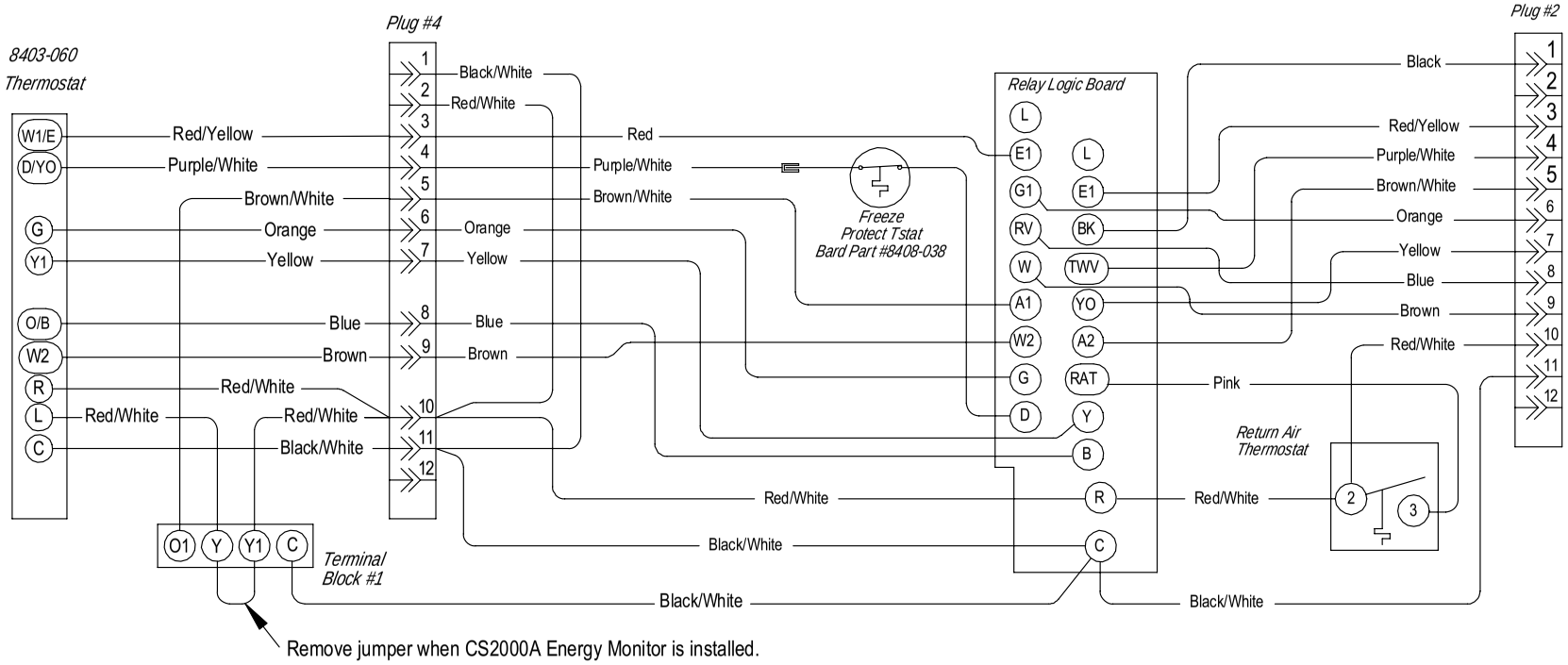

4102-065

FIGURE 22

Dehumidification Wiring Diagram With "I" Thermostat Option

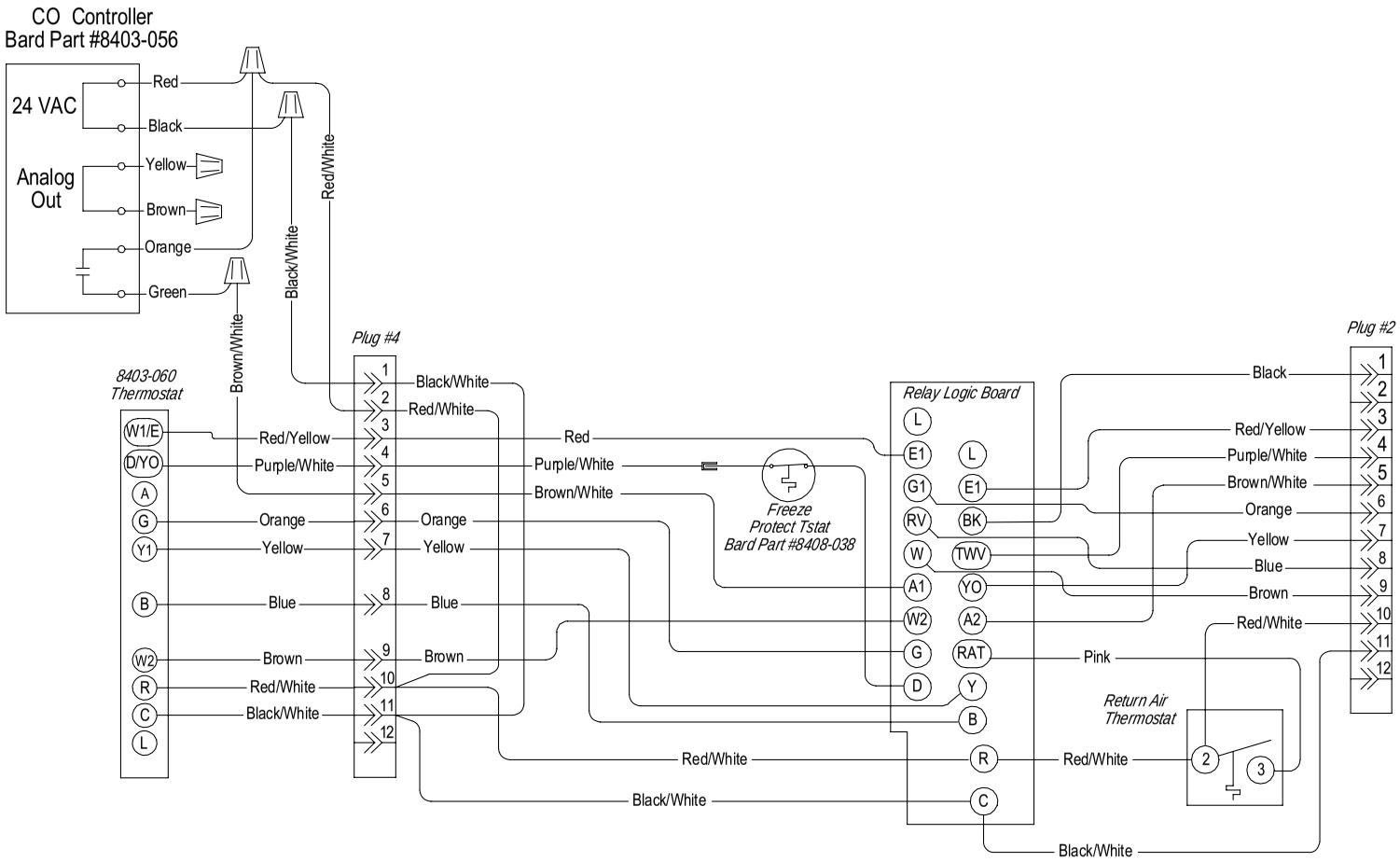

4102-066

THESE UNITS REQUIRE R-410A REFRIGERANT AND POLYOL ESTER OIL.

GENERAL:

1. Use separate service equipment to avoid cross contamination of oil and refrigerants.
2. Use recovery equipment rated for R-410A refrigerant.
3. Use manifold gauges rated for R-410A (800 psi/250 psi low).
4. R-410A is a binary blend of HFC-32 and HFC-125.
5. R-410A is nearly azeotropic - similar to R-22 and R-12. Although nearly azeotropic, charge with liquid refrigerant.
6. R-410A operates at 40-70% higher pressure than R-22, and systems designed for R-22 cannot withstand this higher pressure.
7. R-410A has an ozone depletion potential of zero, but must be reclaimed due to its global warming potential.
8. R-410A compressors use Polyol Ester oil.
9. Polyol Ester oil is hygroscopic; it will rapidly absorb moisture and strongly hold this moisture in the oil.
10. A liquid line dryer must be used - even a deep vacuum will not separate moisture from the oil.
11. Limit atmospheric exposure to 15 minutes.
12. If compressor removal is necessary, always plug compressor immediately after removal. Purge with small amount of nitrogen when inserting plugs.

TOPPING OFF SYSTEM CHARGE

If a leak has occurred in the system, Bard Manufacturing recommends reclaiming, evacuating (see criteria above), and charging to the nameplate charge. If done correctly, topping off the system charge can be done without problems.

With R-410A, there are no significant changes in the refrigerant composition during multiple leaks and recharges. R-410A refrigerant is close to being an azeotropic blend (it behaves like a pure compound or single component refrigerant). The remaining refrigerant charge, in the system, may be used after leaks have occurred and then “top-off” the charge by utilizing the charging charts on the inner control panel cover as a guideline.

REMEMBER: When adding R-410A refrigerant, it must come out of the charging cylinder/tank as a liquid to avoid any fractionation, and to insure optimal system performance. Refer to instructions for the cylinder that is being utilized for proper method of liquid extraction.

⚠ WARNING

Failure to conform to these practices could lead to damage, injury or death.

SAFETY PRACTICES:

1. Never mix R-410A with other refrigerants.
2. Use gloves and safety glasses. Polyol Ester oils can be irritating to the skin, and liquid refrigerant will freeze the skin.
3. Never use air and R-410A to leak check; the mixture may become flammable.
4. Do not inhale R-410A – the vapor attacks the nervous system, creating dizziness, loss of coordination and slurred speech. Cardiac irregularities, unconsciousness and ultimate death can result from breathing this concentration.
5. Do not burn R-410A. This decomposition produces hazardous vapors. Evacuate the area if exposed.
6. Use only cylinders rated DOT4BA/4BW 400.
7. Never fill cylinders over 80% of total capacity.
8. Store cylinders in a cool area, out of direct sunlight.
9. Never heat cylinders above 125°F.
10. Never trap liquid R-410A in manifold sets, gauge lines or cylinders. R-410A expands significantly at warmer temperatures. Once a cylinder or line is full of liquid, any further rise in temperature will cause it to burst.

START UP

DESCRIPTION OF STANDARD EQUIPMENT

Solid State Electronic Heat Pump Control

Provides efficient 30-minute defrost cycle. A thermistor sensor and speed up terminal for service along with a 10- minute defrost override are standard on the electronic heat pump control.

High / Low Pressure Switch

Provides refrigerant circuit high pressure and loss of charge protection. Includes lockout circuit that is resettable from room thermostat.

Five Minute Compressor Time Delay

Provides short cycle protection for the compressor which extends compressor life. Built into the electronic heat pump control as standard.

Service Light

One service light indicates when service is required.

- Check System – detects high or low pressure switch operation for compressor protection.

OPTIONAL CFM (Q36H1D, Q42H1D, Q48H1D AND Q60H1D ONLY)

These units are shipped from the factory set to operate at the optional CFM level shown in Table 9. This provides lower operating sound levels for non-ducted, free discharge applications. This CFM level will reduce the system capacity performance by approximately 2% at the same energy efficiency.

Rated CFM is required for ducted applications for maximum performance rating. To obtain full CFM on these models, connect jumper wire as follows:

1. Disconnect all power to the unit. Failure to do so may result in damage to the motor.
2. Open return air access panel.
3. Open inner control panel cover.
4. Locate low voltage terminal strip. There is a pink jumper wire with both ends attached to terminal marked “G2”. Move one end of the jumper to terminal “Y”
5. Reverse steps to reassemble.

IMPORTANT INSTALLER NOTE

For improved start-up performance, wash the indoor coil with a dishwasher detergent.

PHASE MONITOR

All units with three phase scroll compressors are equipped with a 3 phase line monitor to prevent compressor damage due to phase reversal.

The phase monitor in this unit is equipped with two LEDs. If the Y signal is present at the phase monitor and phases are correct the green LED will light and the compressor contactor is allowed to energize.

If phases are reversed, the red fault LED will be lit and compressor operation is inhibited.

If a fault condition occurs, reverse two of the supply leads to the unit. Do not reverse any of the unit factory wires as damage may occur.

THREE PHASE SCROLL COMPRESSOR START UP INFORMATION

Scroll compressors, like several other types of compressors, will only compress in one rotational direction. Direction of rotation is not an issue with single phase compressors since they will always start and run in the proper direction.

However, three phase compressors will rotate in either direction depending upon phasing of the power. Since there is a 50-50 chance of connecting power in such a way as to cause rotation in the reverse direction, ***verification of proper rotation must be made.*** Verification of proper rotation direction is made by observing that suction pressure drops and discharge pressure rises when the compressor is energized. Reverse rotation also results in an elevated sound level over that with correct rotation, as well as, substantially reduced current draw compared to tabulated values.

Verification of proper rotation must be made at the time the equipment is put into service. If improper rotation is corrected at this time there will be no negative impact on the durability of the compressor. However, reverse operation for even one hour may have a negative impact on the bearing due to oil pump out.

All three phase scroll compressors used in the QTEC series are wired identically internally. As a result, once the correct phasing is determined for a specific system or installation, connecting properly phased power leads to the same Fusite terminal should maintain proper rotation direction. The direction of rotation of the motor may be changed by reversing any two line connections to the unit.

SERVICE HINTS

1. Caution user to maintain clean air filters at all times. Also, not to needlessly close off supply air registers. This may reduce airflow through the system, which shortens equipment service life as well as increasing operating costs and noise levels.
2. Switching to heating cycle at 75°F or higher outside temperature may cause a nuisance trip of the remote reset high pressure switch. Turn thermostat off, then on to reset the high pressure switch.
3. The heat pump wall thermostats perform multiple functions. Be sure that all function switches are correctly set for the desired operating mode before trying to diagnose any reported service problems.
4. Check all power fuses or circuit breakers to be sure they are the correct rating.
5. Periodic cleaning of the outdoor coil to permit full and unrestricted airflow circulation is essential.
6. Some service requires the need to remove the unit from the wall including replacement of the indoor coil and/or the outdoor coil. Also servicing the outdoor fan motor or fan blade will require removing the unit from the wall if the unit is installed at a height that is not easily accessible from the outside of the building.

   In order to remove the unit from the wall the following procedure must be used:

   a. Turn off power to the unit at the remote location. Some units may have more than one power supply.
   b. Disconnect field wiring at unit terminal block and remove from unit.
   c. Disconnect condensate drain.
   d. Remove the lower skirting around the unit.
   e. Remove wall mounting brackets from wall on each side of the unit.
   f. If unit is attached to duct work, remove upper cabinet extension by removing the top center screw only from the cabinet side panel.
   g. Remove screws that attach the duct work to the unit flanges.

   This unit is equipped with four rollers mounted to the base. For ease of pulling unit out from the wall, you may want to remove the bottom service door which requires removal of the return air panel, and grip the front flange of the base pan then pull straight out.

7. Annual maintenance is required to make sure that all of the systems are functioning properly.

   a. Check to make sure that the drains are not obstructed in any way.
   b. Remove any debris in the condenser section of the unit.
   c. Inspect and clean mist eliminator as described below.
   d. Inspect and wash outdoor coil as necessary.

MIST ELIMINATOR SERVICE

A mist eliminator is supplied with the wall sleeve. The mist eliminator is constructed of an aluminum frame and mesh. The mist eliminator is located in the top section of the wall sleeve and can be removed from the inside of the building without removing the unit from the wall. This requires that the ventilation package must be removed.

It is recommended that the mist eliminator be inspected annually and serviced as required. The mist eliminator can be inspected from the outside of the building by looking through the outdoor grille. The mist eliminator can be serviced from the outside by using a vacuum cleaner. The outdoor grille must be removed. Use the vacuum to remove dirt and debris from the surface of the mist eliminator. If additional cleaning is required, the mist eliminator will have to be removed from the sleeve.

The ventilation package will have to be removed to gain access to the mist eliminator. If the blank off plate option is used, it is not necessary to service the mist eliminator. The steps necessary to remove each of the vent options are listed below.

The mist eliminator can be cleaned by washing with soap and water. The excess water should be shaken off the mist eliminator before it is reinstalled.

VENT OPTIONS

BAROMETRIC FRESH AIR DAMPER (Standard)

Before starting, make sure the power has been turned off. The return air grille panel must be removed. The fresh air damper assembly can be seen on the back of the unit. See Figure 23.

1. The fresh air damper is attached to the back of the unit with one screw on either side of the assembly. Both of the screws must be removed.
2. Once the mounting screws are removed, tilt the assembly down and lift it out.

The mist eliminator can be seen through the opening. The mist eliminator must be raised up and the bottom can be pulled toward the front of the unit.

COMMERCIAL ROOM VENTILATOR (Option)

Before starting, make sure the power has been turned off. The return air grille panel must be removed. The commercial room ventilator (CRV) can be seen after the panel has been removed. The CRV must be removed to gain access to the mist eliminator.

1. The two mounting screws in the front of the CRV must be removed.
2. The power connectors for the CRV (located on the right side of the unit) must be disconnected. Squeeze the tabs on the sides of the connector and pull straight out. Unplug both of the connectors.
3. Slide the CRV straight out of the unit.

The mist eliminator can be seen through the opening in the back of the unit. The mist eliminator must be raised up and the bottom can be pulled toward the front of the unit and removed.

QTEC R ENERGY RECOVERY VENTILATOR (Option)

Before starting, make sure that the power has been turned off. The return air grille panel must be removed. The energy recovery ventilator (QERV) can be seen after the panel has been removed. To gain access to the mist eliminator, the QERV must be removed. See Figure 24.

1. The front fill plate of the QERV must be removed. There is one screw on either side of the plate. Remove these screws and remove the plate.
2. On either side of the QERV there are mounting screws that hold the QERV in place. Remove both of these screws.
3. Underneath the heat recovery cassette there is a power connector for the lower blower assembly. To disconnect this plug, the tabs on both sides of the plug must be squeezed to release the plug. While squeezing the tabs, pull the plug out of the socket.
4. The QERV is plugged into the unit in the right side of the unit. Both of these plugs must be disconnected to remove the QERV. Squeeze the tabs on the sides of the connector and pull straight out.
5. Slide the QERV assembly straight out of the unit, being careful not to let the cassette slide out of the QERV.

The mist eliminator can be seen through the opening in the back of the unit. The mist eliminator must be raised up and the bottom can be pulled toward the front of the unit and removed.

FIGURE 23
FRESH AIR DAMPER REMOVAL

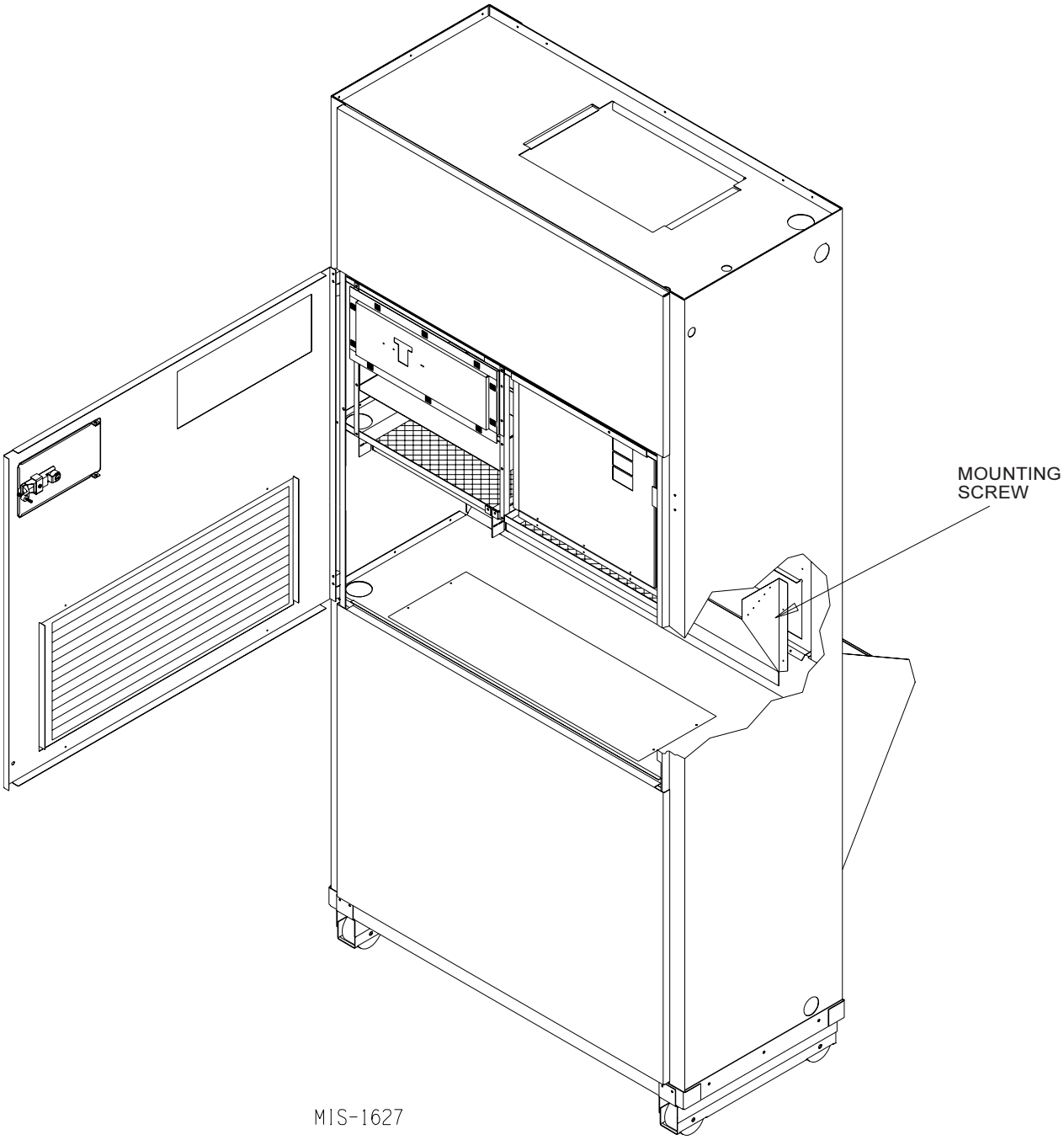

FIGURE 24
QERV REMOVAL

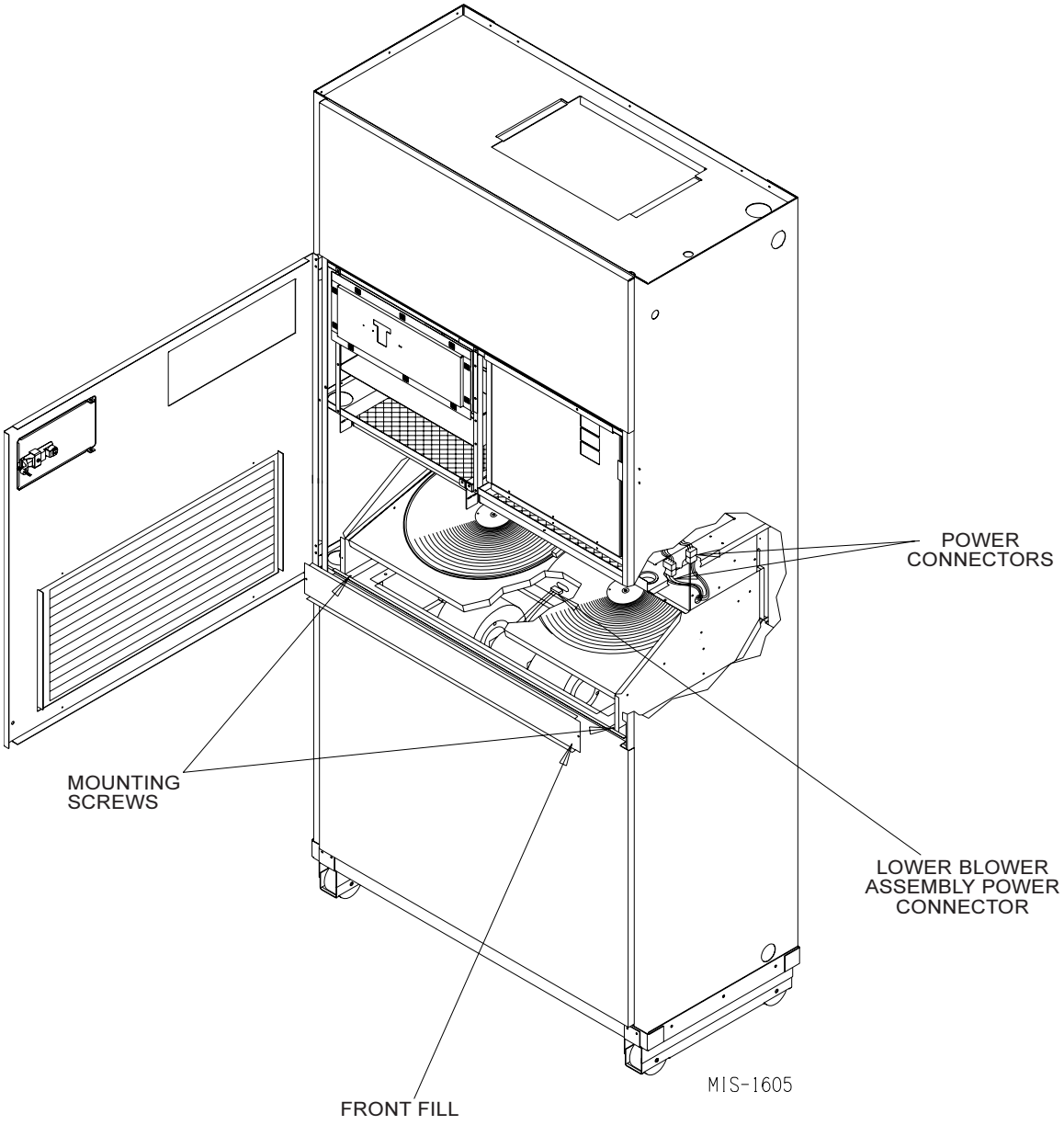

SEQUENCE OF OPERATION

Cooling – Circuit R-Y makes the thermostat pull in the compressor contactor starting the compressor and outdoor motor. The G (indoor motor) circuit is automatically completed on any call for cooling operation, or can be energized by manual fan switch on subbase for constant air circulation.

Heating – A 24V solenoid coil on the reversing valve controls heating cycle operation. Two thermostat options, one allowing "Auto" change over from cycle to cycle and the other constantly energizing solenoid coil during heating season and thus eliminating pressure equalization noise except during defrost, are to be used on "Auto" option, a circuit is completed for R-W1 and R-Y on each heating "on" cycle, energizing reversing valve solenoid and pulling in compressor contactor starting compressor and outdoor motor. R-G also makes starting indoor blower motor. Heat pump heating cycle now in operation.

The second option has no "Auto" change over position, but instead energizes the reversing valve solenoid constantly whenever the system switch on subbase is placed in "Heat" position, the "B" terminal being constantly energized from R. A thermostat demand for heat completes R-Y circuit, pulling in compressor contactor starting compressor and outdoor motor. R-G also make starting indoor blower motor.

Reheat Circuit – There is a small capillary tube inserted between the reheat coil return line and suction line that will prevent liquid from accumulating in the reheat coil when it is inactive. This drain does not affect the normal operation of the system.

There is a check valve located in the reheat coil return line. It has a soft spring to hold the ball on the seat. This will make the method of checking the ball freedom with a magnet difficult. Refer to Figures 26 and 27 for the location of the check valve and drain back capillary.

When the system is operating in the dehumidification mode, the suction pressure will be reduced by 4 to 8 psig and the discharge pressure will be reduced by 19 to 22 psig.

Return Air Thermostat – In dehumidification mode if the return air temperature is lower than 65°, the return air thermostat closes and brings on stage one electric heat to maintain 65°.

High / Low Pressure Control provides protection for the compressor. In the event system pressures go above 600 PSI or below 15 PSI in either cooling or heating mode the compressor will be stopped. This will activate the red light located in the control panel. The lockout circuit will hold compressor off line. When the system problem is corrected, the unit operation can be restored by turning of the main power supply off and then back on, or reset the room thermostat. The low pressure control has a bypass to eliminate nuisance lockout on cold start up.

The bypass timer should be set to 120 seconds. This is to assure there is no nuisance tripping of the low-pressure control during startup in heating mode under cold weather conditions.

OPTIONAL CLIMATE CONTROLS SEQUENCE OF OPERATION

The Climate Control ***Option E*** is an electronic, programmable thermostat and a humidistat. This unit has a refrigerant reheat circuit that is controlled by a 3 way valve.

When the humidity is above the setpoint of the humidistat, the compressor circuit and the 3 way valve are energized and the evaporator airflow is reduced. The 3 way valve directs hot discharge gas into a separate desuperheating condenser circuit that reheats the conditioned air before it is delivered to the room. When the humidistat is satisfied, the system switches back to normal air conditioning mode.

If the thermostat calls for cooling during dehumidification mode, the call for cooling takes precedence over the dehumidification and the unit will cool until the thermostat is satisfied. Once the call for cooling is satisfied, the unit may continue to dehumidify.

If the thermostat calls for heat when the unit is in the dehumidification mode, the electric heaters will energize and the evaporator airflow will return to the heating airflow. When the thermostat is satisfied, the electric heaters will turn off and the airflow will be reduced and the system will continue to dehumidify until humidistat is satisfied.

If the unit is running in heat pump mode and the humidistat calls for dehumidification, the dehumidification mode takes precedence over the heat pump heating mode. The unit will not return to the heating mode until 2nd stage heating is called for.

The Climate Control ***Option I*** is an electronic, programmable thermostat, humidistat and CO_2 controller. This unit has a refrigerant reheat circuit that is controlled by a 3 way valve.

When the humidity is above the setpoint of the humidistat, the compressor circuit and the 3 way valve are energized and the evaporator airflow is reduced. The 3 way valve directs hot discharge gas into a separate desuperheating condenser circuit that reheats the conditioned air before it is delivered to the room. When the humidistat is satisfied, the system switches back to normal air conditioning mode.

If the thermostat calls for cooling during dehumidification mode, the call for cooling takes precedence over the dehumidification and the unit will cool until the thermostat is satisfied. Once the call for cooling is satisfied, the unit may continue to dehumidify.

If the thermostat calls for heat when the unit is in the dehumidification mode, the electric heaters will energize and the evaporator airflow will return to the heating airflow. When the thermostat is satisfied, the electric heaters will turn off and the airflow will be reduced and the system will continue to dehumidify until humidistat is satisfied.

If the unit is running in heat pump mode and the humidistat calls for dehumidification, the dehumidification mode takes precedence over the heat pump heating mode. The unit will not return to the heating mode until 2nd stage heating is called for.

The CO_2 controller will energize the vent option and the ID blower when the room CO_2 levels rise over set level. Default CO_2 set point is 1000 ppm. See Figure 25.

FIGURE 25
CO_2 CONTROLLER - FACTORY SET TO 1000 PPM

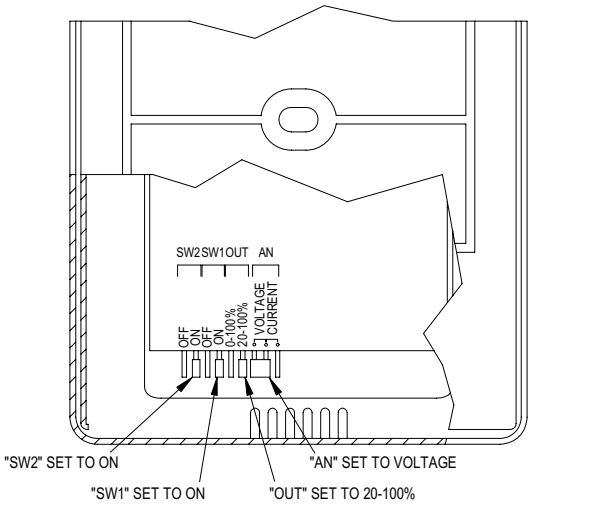

MIS-2667

The Climate Control ***Option G*** has a non-programmable electronic thermostat, humidistat and is compatible for use with a CS2000A* Energy Control Monitor. This unit has a refrigerant reheat circuit that is controlled by a three-way valve.

Unit operation is controlled by the thermostat and humidistat, and optional CS2000A* Energy Monitor Controller can be easily integrated by simple connection to the low voltage terminal block provided. See Figure 21.

NOTE: The CS2000A (or other means for ventilation control) must be used if any mechanical (motorized) ventilation options are installed.*

Dehumidification can be set to be available only when CS2000A* is active or to be available continuously by switching a jumper on the relay logic board. See notes on Table 12.

When the humidity is above the setpoint of the humidistat, the compressor circuit and the 3 way valve are energized and the evaporator airflow is reduced. The 3 way valve directs hot discharge gas into a separate desuperheating condenser circuit that reheats the conditioned air before it is delivered to the room. If the return air thermostat sensed a temperature below 65° during dehumidification, the fist stage electric heaters are brought on to raise the return air temperature above 65°. When the humidistat is satisfied, the system switches back to normal air conditioning mode.

If the thermostat calls for cooling during dehumidification mode, the call for cooling takes precedence over the dehumidification and the unit will cool until the thermostat is satisfied. Once the call for cooling is satisfied, the unit may continue to dehumidify.

If the thermostat calls for heat when the unit is in the dehumidification mode, the electric heaters will energize and the evaporator airflow will return to the heating airflow. When the thermostat is satisfied, the electric heaters will turn off and the airflow will be reduced and the system will continue to dehumidify until humidistat is satisfied.

If the unit is running in heat pump mode and the humidistat calls for dehumidification, the dehumidification mode takes precedence over the heat pump heating mode. The unit will not return to the heating mode until 2nd stage heating is called for.

REFRIGERANT TUBE SCHEMATIC FOR REHEAT COIL

Figure 26 shows the refrigerant gas flow through the reheat coil during the dehumidification mode.

When the unit is in standard cooling (Figure 27) or heating mode the reheat coil is inactive.

PRESSURE SERVICE PORTS

High and low pressure service ports are installed on all units so that the system operating pressures can be observed. Pressure curves can be found later in the manual covering all models on both cooling and heating cycles. It is imperative to match the correct pressure curve to the unit by model number. Upper and lower service doors must be attached to obtain proper reading.

FIGURE 26
QTEC DEHUMIDIFICATION MODE CIRCUIT DIAGRAM

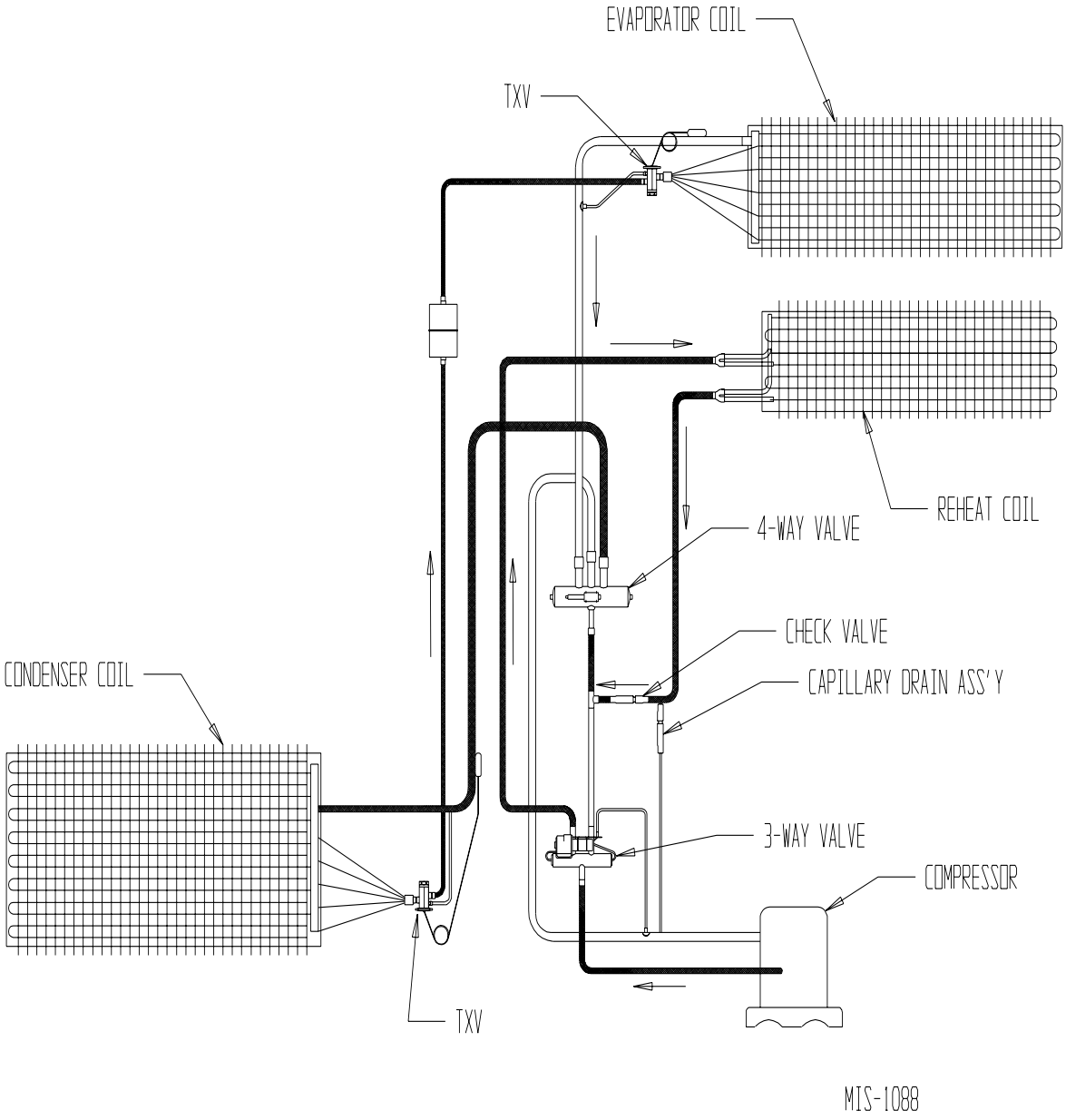

FIGURE 27
QTEC COOLING MODE CIRCUIT DIAGRAM

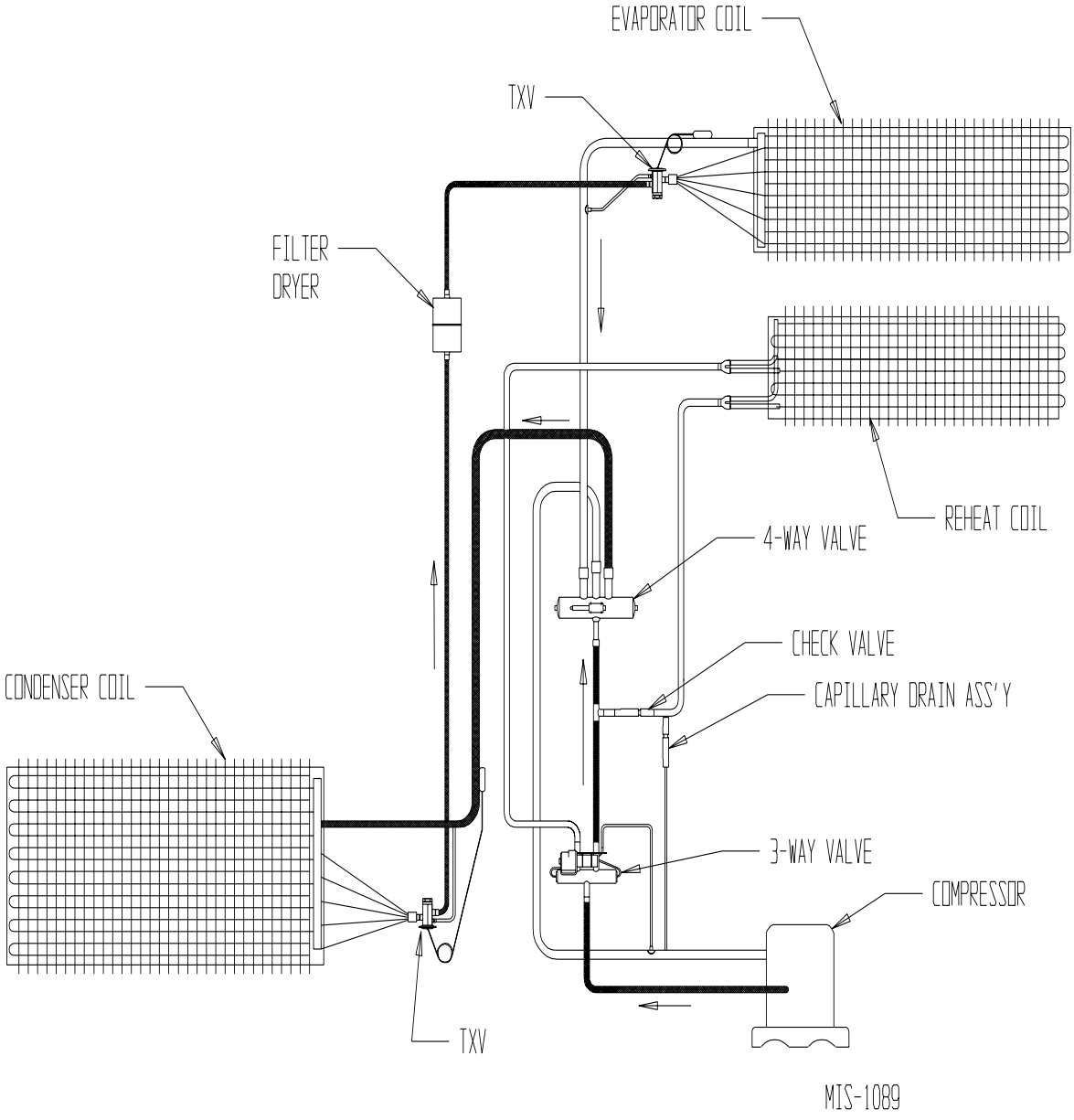

DEFROST CYCLE

The defrost cycle is controlled by temperature and time on the solid state heat pump control. See Figure 28.

When the outdoor temperature is in the lower 40°F temperature range or colder, the outdoor coil temperature is 32°F or below. This coil temperature is sensed by the coil temperature sensor mounted near the bottom of the outdoor coil. Once coil temperature reaches 30°F or below, the coil temperature sensor sends a signal to the control logic of the heat pump control and the defrost timer will start.

After 30 minutes (Default Setting) of run time at 30°F or below, the heat pump control will place the system in the defrost mode.

During the defrost mode, the refrigerant cycle switches back to the cooling cycle, the outdoor motor stops, electric heaters are energized, and hot gas passing through the outdoor coil melts any accumulated frost. When the temperature rises to approximately 57°F, the coil temperature sensor will send a signal to the heat pump control which will return the system to heating operations automatically.

If some abnormal or temporary condition such as a high wind causes the heat pump to have a prolonged defrost cycle, the heat pump control will restore the system to heating operation automatically after 10 minutes.

The heat pump defrost control board has an option of 30, 60 or 90-minute setting. All models are shipped from the factory on the 30-minute pin. If special circumstances require a change to another time, remove the wire from the 30-minute terminal and reconnect to the desired terminal. The manufacturer's recommendation is for 30-minute defrost cycles. Refer to Figure 28.

There is a cycle speed up jumper on the control. This can be used to reduce the time between defrost cycle operation without waiting for time to elapse.

Use a small screwdriver or other metallic object, or another ¼ inch QC, to short between the *SPEEDUP* terminals to accelerate the HPC timer and initiate defrost.

Be careful not to touch any other terminals with the instrument used to short the *SPEEDUP* terminals. It may take up to 10 seconds with the *SPEEDUP* terminals shorted for the speedup to be completed and the defrost cycle to start.

As soon as the defrost cycle kicks in remove the shorting instrument from the SPEEDUP terminals. Otherwise the timing will remain accelerated and run through the 1-minute minimum defrost length sequence in a matter of seconds and will automatically terminate the defrost sequence.

There is an initiate defrost jumper (sen jump) on the control that can be used at any outdoor ambient during the heating cycle to simulate a 0° coil temperature.

This can be used to check defrost operation of the unit without waiting for the outdoor ambient to fall into the defrost region.

By placing a jumper across the *SEN JMP* terminals (a ¼ inch QC terminal works best) the defrost sensor mounted on the outdoor coil is shunted out and will activate the timing circuit. This permits the defrost cycle to be checked out in warmer weather conditions without the outdoor temperature having to fall into the defrost region.

In order to terminate the defrost test the *SEN JMP* jumper must be removed. If left in place too long, the compressor could stop due to the high pressure control opening because of high pressure condition created by operating in the cooling mode with outdoor fan off. Pressure will rise fairly fast as there is likely no actual frost on the outdoor coil in this artificial test condition.

There is also a 5-minute compressor time delay function built into the HPC. This is to protect the compressor from short cycling conditions. The board's LED will have a fast blink rate when in the compressor time delay. In some instances, it is helpful to the service technician to override or speed up this timing period, and shorting out the *SPEEDUP* terminals for a few seconds can do this.

Low Pressure Switch Bypass Operation - The control has a selectable (SW1) low pressure switch bypass set up to ignore the low pressure switch input during the first (30, 60, 120 or 180 seconds) of "Y" operation. Factory setting is 120 seconds.

After this period expires, the control will then monitor the low pressure switch input normally to make sure that the switch is closed during "Y" operation.

FIGURE 28
DEFROST CONTROL BOARD

SW 1	SW 2	TIME (SEC)
OFF	OFF	30
ON	OFF	60
OFF	ON	120*
ON	ON	180

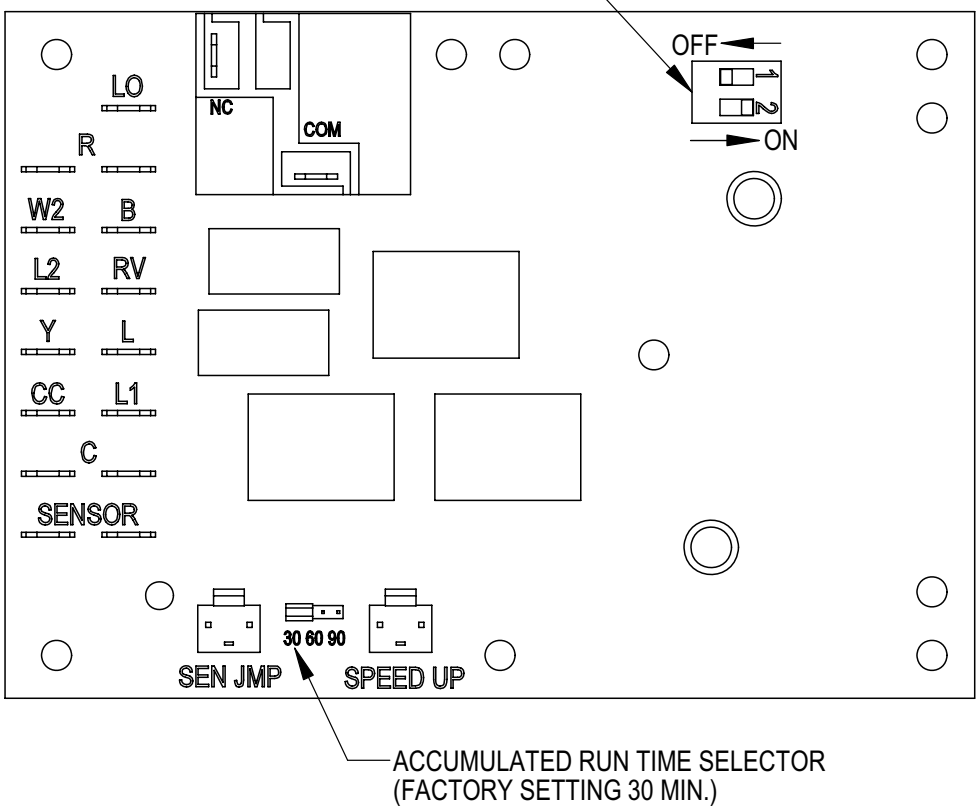

MIS-2684 A

TROUBLESHOOTING

SOLID STATE HEAT PUMP CONTROL TROUBLESHOOTING PROCEDURE

1. **NOTE:** *A thorough understanding of the defrost cycle sequence is essential. Review that section earlier in this manual prior to troubleshooting the control.* Turn on AC power supply to unit.
2. Turn thermostat blower switch to "fan on" – the indoor blower should start. (If it doesn't, troubleshoot indoor unit and correct problem.)
3. Turn thermostat blower to "auto" position. Indoor blower should stop. **NOTE:** *Many models have a 1-minute blower time delay on "off" command; wait for this to time-out.*
4. Set system switch to "heat" or "cool". Adjust thermostat to call for heat or cool. The indoor blower, compressor and outdoor fan should start.

NOTE: If there was no power to 24 volt transformer, the compressor and outdoor fan motor will not start for 5 minutes. This is because of the compressor short cycle protection.

CODES	FUNCTION
Slow Blink	Normal Operation
Fast Blink	Compressor Time Delay
1 Blink	Low Pressure Switch Failure
2 Blink	High Pressure Switch Failure
3 Blink	Defrost Mode Active

TABLE 5
TROUBLESHOOTING

Symptom	Description, Check & Possible Causes	What & How to Check / Repair
Compressor will not start (heating or cooling)	**1. Check for LED illumination.** Is there an LED illuminated on the board (flashing)?	Yes = go to Step #2; No = go to Step #3
	2. Check for error codes. Is the LED flashing a Code?	Yes = go to Step #4; No = go to Step #8
	3. Check for power at board. Is there 24 volts AC between R and C?	Yes = go to Step #13; No = go to Step #9
	4. Check codes. What code is blinking?	Code "1", go to Step #6; Code "2", go to Step#7; Fast Blink, go to Step #5
	5. Compressor delay active. Wait for 5 minute delay or jump board's "speed up pins".	Check for proper operation; if still needed, go back to Step #1.
	6. Low pressure fault.	Check wiring circuit and unit pressures.
	7. High pressure fault.	Check wiring circuit and unit pressures.
	8. Check for Compressor input signal. Is there 24 volts AC between Y and C?	Yes = go to Step #10; No = go to Step #11
	9. No power to board.	The unit either does not have unit voltage, the transformer is bad or the unit wiring is incorrect.
	10. Check for Compressor output signal. Is there 24 volts AC between CC & C?	Yes = go to Step #12; No = go to Step #13
	11. No "Y" compressor input signal.	Check thermostat wiring, incorrect phase of unit (see section on Phase Monitor), and finally unit wiring.
	12. No "CC" compressor output signal.	Check compressor contactor for proper operation and finally check compressor.
	13. Faulty board.	Replace defrost board.
Fan outdoor motor does not run (cooling or heating except during defrost)	Heat pump control defective	Check across fan relay on heat pump control. (Com-NC) Replace heat pump control.
	Motor defective	Check for open or shorted motor winding. Replace motor.
	Motor capacitor defective	Check capacitor rating. Check for open or shorted capacitor. Replace capacitor.
Reversing valve does not energize (heating only)	Heat pump control defective	Check for 24V between RV-C and B-C. 1. Check control circuit wiring. 2. Replace heat pump control
	Reversing valve solenoid coil defective	Check for open or shorted coil. Replace solenoid coil.
Unit will not go into defrost (heating only)	Temperature sensor or heat pump control defective	Disconnect temperature sensor from board and jumper across "SPEEDUP" terminals and "SEN JMP" terminals. This should cause the unit to go through a defrost cycle within one minute. 1. If unit goes through defrost cycle, replace temperature sensor. 2. If unit does not go through defrost cycle, replace heat pump control.
Unit will not come out of defrost (heating only)	Temperature sensor or heat pump control defective.	Jumper across "SPEEDUP" terminal. This should cause the unit to come out of defrost within one minute. 1. If unit comes out of defrost cycle, replace temperature sensor. 2. If unit does not come out of defrost cycle, replace heat pump control.

CHECKING TEMPERATURE SENSOR

1. Disconnect temperature sensor from board and from outdoor coil.
2. Use an ohmmeter and measure the resistance of the sensor. Also use ohmmeter to check for short or open.
3. Check resistance reading to chart of resistance use sensor ambient temperature. (Tolerance of part is ± 10%.)
4. If sensor resistance reads very low, then sensor is shorted and will not allow proper operation of the heat pump control.
5. If sensor is out of tolerance, shorted, open, or reads very low ohms then it should be replaced.

TABLE 6
TEMPERATURE (F) VS RESISTANCE (R) OF TEMPERATURE SENSOR

F	R	F	R	F	R	F	R	F	R
-25.0	196871	5.0	72910	35.0	29986	65.0	13474	95.0	6531
-24.0	190099	6.0	70670	36.0	29157	66.0	13137	96.0	6383
-23.0	183585	7.0	68507	37.0	28355	67.0	12810	97.0	6239
-22.0	177318	8.0	66418	38.0	27577	68.0	12492	98.0	6098
-21.0	171289	9.0	64399	39.0	26823	69.0	12183	99.0	5961
-20.0	165487	10.0	62449	40.0	26082	70.0	11883	100.0	2827
-19.0	159904	11.0	60565	41.0	25383	71.0	11591	101.0	4697
-18.0	154529	12.0	58745	42.0	24696	72.0	11307	102.0	5570
-17.0	149355	13.0	56985	43.0	24030	73.0	11031	103.0	5446
-16.0	144374	14.0	55284	44.0	23384	74.0	10762	104.0	5326
-15.0	139576	15.0	53640	45.0	22758	75.0	10501	105.0	5208
-14.0	134956	16.0	52051	46.0	22150	76.0	10247	106.0	5094
-13.0	130506	17.0	50514	47.0	21561	77.0	10000	107.0	4982
-12.0	126219	18.0	49028	48.0	20989	78.0	9760	108.0	4873
-11.0	122089	19.0	14590	49.0	20435	79.0	8526	109.0	4767
-10.0	118108	20.0	46200	50.0	19896	80.0	9299	110.0	7663
-9.0	114272	21.0	44855	51.0	19374	81.0	9077	111.0	4562
-8.0	110575	22.0	43554	52.0	18867	82.0	8862	112.0	4464
-7.0	107010	23.0	42295	53.0	18375	83.0	8653	113.0	4367
-6.0	103574	24.0	41077	54.0	17989	84.0	8449	114.0	7274
-5.0	100260	25.0	39898	55.0	17434	85.0	8250	115.0	4182
-4.0	97064	26.0	38757	56.0	16984	86.0	8057	116.0	4093
-3.0	93981	27.0	37652	57.0	16547	87.0	7869	117.0	4006
-2.0	91008	28.0	36583	58.0	16122	88.0	7686	118.0	3921
-1.0	88139	29.0	35548	59.0	15710	89.0	7507	119.0	3838
0.0	85371	30.0	34545	60.0	15310	90.0	7334	120.0	3757
1.0	82699	31.0	33574	61.0	14921	91.0	7165	121.0	3678
2.0	80121	32.0	32634	62.0	14544	92.0	7000	122.0	3601
3.0	77632	33.0	31723	63.0	14177	93.0	6840	123.0	3526
4.0	75230	34.0	30840	64.0	13820	94.0	6683	124.0	3452

TROUBLESHOOTING GE ECM™ MOTORS

Caution:

Disconnect power from unit before removing or replacing connectors, or servicing motor. To avoid electric shock from the motor's capacitors, disconnect power and wait at least 5 minutes before opening motor.

Symptom	Cause/Procedure
Motor rocks slightly when starting	• This is normal start-up for ECM
Motor won't start • No movement	• Check blower turns by hand • Check power at motor • Check low voltage (24 Vac R to C) at motor • Check low voltage connections (G, Y, W, R, C) at motor • Check for unseated pins in connectors on motor harness • Test with a temporary jumper between R - G • Check motor for tight shaft • Perform motor/control replacement check • **Perform Moisture Check**
• Motor rocks, but won't start	• Check for loose or compliant motor mount • Make sure blower wheel is tight on shaft • Perform motor/control replacement check
Motor oscillates up & down while being tested off of blower	• It is normal for motor to oscillate with no load on shaft
Motor starts, but runs erratically • Varies up and down or intermittent	• Check line voltage for variation or "sag" • Check low voltage connections (G, Y, W, R, C) at motor, unseated pins in motor harness connectors • Check "Bk" for erratic CFM command (in variable-speed applications) • Check out system controls, Thermostat • **Perform Moisture Check**
• "Hunts" or "puffs" at high CFM (speed)	• Does removing panel or filter reduce "puffing"? - Reduce restriction - Reduce max airflow
• Stays at low CFM despite system call for cool or heat CFM	• Check low voltage (Thermostat) wires and connections • Verify fan is not in delay mode; wait until delay complete • "R" missing/not connected at motor • Perform motor/control replacement check
• Stays at high CFM	• "R" missing/not connected at motor • Is fan in delay mode? - wait until delay time complete • Perform motor/control replacement check
• Blower won't shut off	• Current leakage from controls into G, Y or W? Check for Triac switched thermostat or solid-state relay
Excessive noise • Air noise	• Determine if it's air noise, cabinet, duct or motor noise; interview customer, if necessary • High static creating high blower speed? - Is airflow set properly? - Does removing filter cause blower to slow down? Check filter - Use low-pressure drop filter - Check/correct duct restrictions

Symptom	Cause/Procedure
• Noisy blower or cabinet	• Check for loose blower housing, panels, etc. • High static creating high blower speed? - Check for air whistling through seams in ducts, cabinets or panels - Check for cabinet/duct deformation
• "Hunts" or "puffs" at high CFM (speed)	• Does removing panel or filter reduce "puffing"? - Reduce restriction - Reduce max. airflow
Evidence of Moisture Check • Motor failure or malfunction has occurred and moisture is present	• Replace motor and **Perform Moisture**
• Evidence of moisture present inside air mover	• **Perform Moisture Check**

Do	Don't
• Check out motor, controls, wiring and connections thoroughly before replacing motor	• Automatically assume the motor is bad.
• Orient connectors down so water can't get in - Install "drip loops"	• Locate connectors above 7 and 4 o'clock positions
• Use authorized motor and model #'s for replacement	• Replace one motor or control model # with another (unless an authorized replacement)
• Keep static pressure to a minimum: - Recommend high efficiency, low static filters - Recommend keeping filters clean. - Design ductwork for min. static, max. comfort - Look for and recommend ductwork improvement, where necessary	• Use high pressure drop filters some have ½" H20 drop! • Use restricted returns
• Size the equipment wisely	• Oversize system, then compensate with low airflow
• Check orientation before inserting motor connectors	• Plug in power connector backwards • Force plugs

Moisture Check

- Connectors are oriented "down" (or as recommended by equipment manufacturer)
- Arrange harness with "drip loop" under motor
- Is condensate drain plugged?
- Check for low airflow (too much latent capacity)
- Check for undercharged condition
- Check and plug leaks in return ducts, cabinet

Comfort Check

- Check proper airflow settings
- Low static pressure for lowest noise
- Set low continuous-fan CFM
- Use humidistat and 2-speed cooling units
- Use zoning controls designed for ECM that regulate CFM
- Thermostat in bad location?

Replacing ECM Control Module

To replace the control module for the GE variable-speed indoor blower motor you need to take the following steps:

1. You MUST have the correct replacement module. The controls are factory programmed for specific operating modes. Even though they look alike, different modules may have completely different functionality.

USING THE WRONG CONTROL MODULE VOIDS ALL PRODUCT WARRANTIES AND MAY PRODUCE UNEXPECTED RESULTS.

2. Begin by removing AC power from the furnace or air handler being serviced. **DO NOT WORK ON THE MOTOR WITH AC POWER APPLIED.** To avoid electric shock from the motor's capacitors, disconnect power and wait at least 5 minutes before opening motor.

3. It is usually not necessary to remove the motor from the blower assembly. However, it is recommended that the whole blower assembly, with the motor, be removed from the furnace/air handler. (Follow the manufacturer's procedures). Unplug the two cable connectors to the motor. There are latches on each connector. **DO NOT PULL ON THE WIRES.** The plugs remove easily when properly released.

4. Locate the two standard ¼" hex head bolts at the rear of the control housing (at the back end of the control opposite the shaft end). *Refer to Figure 29.* Remove these two bolts from the motor and control assembly while holding the motor in a way that will prevent the motor or control from falling when the bolts are removed. If an ECM2.0 control is being replaced (recognized by an aluminum casting rather that a deep-drawn black steel can housing the electronics), remove only the hex-head bolts. **DO NOT REMOVE THE TORX-HEAD SCREWS.**

5. The control module is now free of mechanical attachment to the motor endshield but is still connected by a plug and three wires inside the control. Carefully rotate the control to gain access to the plug at the control end of the wires. With thumb and forefinger, reach the latch holding the plug to the control and release it by squeezing the latch tab and the opposite side of the connector plug and gently pulling the plug out of the connector socket in the control. **DO NOT PULL ON THE WIRES. GRIP THE PLUG ONLY.**

6. The control module is now completely detached from the motor. Verify with a standard ohmmeter that the resistance from each motor lead (in the motor plug just removed) to the motor shell is >100K ohms. *Refer to Figure 30.* (Measure to unpainted motor end plate.) If any motor lead fails this test, do not proceed to install the control module. **THE MOTOR IS DEFECTIVE AND MUST BE REPLACED.** Installing the new control module will cause it to fail also.

7. Verify that the replacement control is correct for your application. Refer to the manufacturer's authorized replacement list. **USING THE WRONG CONTROL WILL RESULT IN IMPROPER OR NO BLOWER OPERATION.** Orient the control module so that the 3-wire motor plug can be inserted into the socket in the control. Carefully insert the plug and press it into the socket until it latches. **A SLIGHT CLICK WILL BE HEARD WHEN PROPERLY INSERTED.** Finish installing the replacement control per one of the three following paragraphs, 8a, 8b or 8c.

8a. **IF REPLACING AN ECM 2.0 CONTROL** (control in cast aluminum can with air vents on the back of the can) **WITH AN ECM 2.3 CONTROL** (control containing black potting for water protection in black deep-drawn steel case with no vents in the bottom of the can), locate the two through-bolts and plastic tab that are packed with the replacement control. Insert the plastic tab into the slot at the perimeter of the open end of the can so that the pin is located on the inside of the perimeter of the can. Rotate the can so that the tab inserts into the tab locater hole in the endshield of the motor. Using the two through-bolts provided with the replacement control, reattach the can to the motor.

THE TWO THROUGH-BOLTS PROVIDED WITH THE REPLACEMENT ECM 2.3 CONTROL ARE SHORTER THAN THE BOLTS ORIGINALLY REMOVED FROM THE ECM 2.0 CONTROL AND MUST BE USED IF SECURE ATTACHMENT OF THE CONTROL TO THE MOTOR IS TO BE ACHIEVED. *DO NOT OVERTIGHTEN THE BOLTS.*

8b. **IF REPLACING AN ECM 2.3 CONTROL WITH AN ECM 2.3 CONTROL**, the plastic tab and shorter through-bolts are not needed. The control can be oriented in two positions 180° apart. **MAKE SURE THE ORIENTATION YOU SELECT FOR REPLACING THE CONTROL ASSURES THE CONTROL'S CABLE CONNECTORS WILL BE LOCATED DOWNWARD IN THE APPLICATION SO THAT WATER CANNOT RUN DOWN THE CABLES AND INTO THE CONTROL.** Simply orient the new control to the motor's endshield, insert bolts, and tighten. ***DO NOT OVERTIGHTEN THE BOLTS.***

8c. **IF REPLACING AN ECM 2.0 CONTROL WITH AN ECM 2.0 CONTROL** *(It is recommended that ECM 2.3 controls be used for all replacements),* the new control must be attached to the motor using through bolts identical to those removed with the original control. ***DO NOT OVERTIGHTEN THE BOLTS.***

9. Reinstall the blower/motor assembly into the HVAC equipment. Follow the manufacturer's suggested procedures.

10. Plug the 16-pin control plug into the motor. The plug is keyed. Make sure the connector is properly seated and latched.

11. Plug the 5-pin power connector into the motor. Even though the plug is keyed, **OBSERVE THE PROPER ORIENTATION. DO NOT FORCE THE CONNECTOR.** It plugs in very easily when properly oriented. **REVERSING THIS PLUG WILL CAUSE IMMEDIATE FAILURE OF THE CONTROL MODULE.**

12. Final installation check. Make sure the motor is installed as follows:
    a. Unit is as far INTO the blower housing as possible.
    b. Belly bands are not on the control module or covering vent holes.
    c. Motor connectors should be oriented between the 4 o'clock and 8 o'clock positions when the blower is positioned in its final location and orientation.
    d. Add a drip loop to the cables so that water cannot enter the motor by draining down the cables. *Refer to Figure 31.*

The installation is now complete. Reapply the AC power to the HVAC equipment and verify that the new motor control module is working properly. Follow the manufacturer's procedures for disposition of the old control module.

Figure 29
Control Disassembly

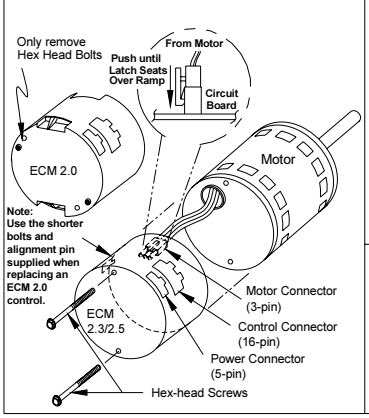

Figure 30
Winding Test

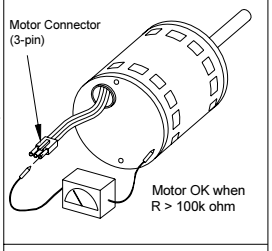

Figure 31
Drip Loop

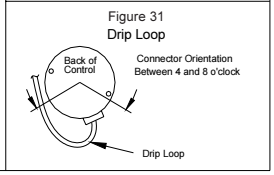

FAN BLADE SETTING DIMENSIONS

Any service work requiring removal or adjustment in the fan and/or motor area will require that the dimensions in Table 7 be checked and blade adjusted in or out of the motor shaft accordingly.

FIGURE 32
FAN BLADE SETTING

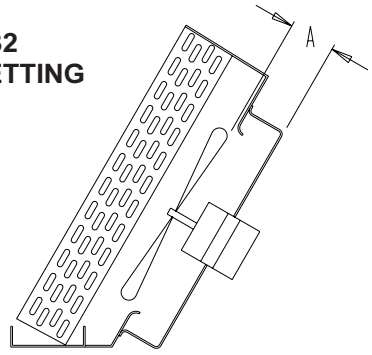

TABLE 7
FAN BLADE DIMENSIONS

MODEL	DIMENSION A (INCHES)
Q24H1D	.750
Q30H1D	.750
Q36H1D	.750
Q42H1D	.750
Q48H1D	.750
Q60H1D	.750

REFRIGERANT CHARGE

The correct system R-410A charge is shown on the unit rating plate. Optimum unit cooling performance will occur with a refrigerant charge resulting in a subcooling as shown in Table 8. If correct charge is in doubt, recover the refrigerant and recharge per the charge on the unit rating plate.

TABLE 8
SUBCOOLING AT LIQUID LINE

MODEL	RATED CFM	95°F OD TEMPERATURE	82°F OD TEMPERATURE
Q24H1D	800	23 - 25	22 - 24
Q30H1D	1000	23 - 25	23 - 25
Q36H1D	1200	19 - 21	17 - 19
Q42H1D	1200	16 - 18	15 - 17
Q48H1D	1400	19 - 21	19 - 21
Q60H1D	1550	22 - 24	22 - 24

TABLE 9
INDOOR BLOWER PERFORMANCE

Model	Rated ESP	① Max. ESP	② Rated CFM	③ Optional CFM	④ Continuous CFM	⑤ Dehumidification CFM	CFM @ Max. EXP
Q24H1D ⑥	.10	0.5	800	-----	800	800	700
Q30H1D	.15	0.8	1000	-----	1000	1000	910
Q36H1D	.15	0.8	1200	1000	1000	1000	1175
Q42H1D	.15	0.8	1200	1000	1000	1000	1175
Q48H1D	.15	0.8	1400	1250	1100	1250	1175
Q60H1D	.20	0.5	1550	1250	1100	1250	1400

NOTE: These units are equipped with a variable speed (ECM) indoor motor that automatically adjust itself to maintain approximately the same rate of indoor airflow in both heating and cooling, dry and wet coil conditions and at both 230/208 or 460 volts.

① Maximum ESP (inches WC) shown is with 1" thick disposable filter (reduced by .2 for 2" filter).

② Rated CFM for ducted applications – required for maximum performance rating. To obtain full CFM on models Q36H1D, Q42H1D, Q48H1D and Q60H1D connect the pink jumper wire (provided) to terminal #G2 and #Y on the low voltage terminal block located in the circuit breaker box.

③ Optional CFM – the unit is shipped from the factory set to operate at the optional CFM level shown. This provides lower operating sound levels for non-ducted, free discharge applications. This reduces system capacity performance by approximately 2% at the same energy efficiency.

④ Continuous fan CFM is the total air being circulated during continuous fan mode.

⑤ Indoor airflow during periods of high humidity when system is operating under control of optional humidistat for maximum humidity reduction.

⑥ Model Q24H1D – when operating on 2nd stage heating the indoor air will increase to 1000 CFM.

TABLE 10
COOLING PRESSURE
(All Temperatures in Degrees F)

Model	Return Air Temperature	Pressure	AIR TEMPERATURE ENTERING OUTDOOR COIL								
			75 ①	80	85	90	95	100	105	110	115
Q24H1D	75 deg. DB	Low Side	122	121	121	121	122	122	123	125	128
	62 deg. WB	High Side	369	378	391	407	426	449	474	503	535
	80 deg. DB	Low Side	130	129	129	129	130	131	132	134	137
	67 deg. WB	High Side	378	388	401	417	437	460	486	516	549
	85 deg. DB	Low Side	135	134	134	134	135	136	137	139	142
	72 deg. WB	High Side	391	402	415	432	452	476	503	534	568
Q30H1D	75 deg. DB	Low Side	122	123	124	126	128	130	132	134	136
	62 deg. WB	High Side	360	377	398	419	444	470	498	528	561
	80 deg. DB	Low Side	131	132	133	135	137	139	141	143	145
	67 deg. WB	High Side	369	387	408	430	455	482	511	542	575
	85 deg. DB	Low Side	136	137	138	140	142	144	146	148	150
	72 deg. WB	High Side	382	401	422	445	471	499	529	561	595
Q36H1D	75 deg. DB	Low Side	122	124	128	130	133	135	137	137	138
	62 deg. WB	High Side	367	390	413	437	460	485	508	533	558
	80 deg. DB	Low Side	130	133	137	139	142	144	146	147	148
	67 deg. WB	High Side	376	400	424	448	472	497	521	547	572
	85 deg. DB	Low Side	135	138	142	144	147	149	151	152	153
	72 deg. WB	High Side	389	414	439	464	489	514	539	566	592
Q42H1D	75 deg. DB	Low Side	118	121	123	125	128	130	132	134	136
	62 deg. WB	High Side	372	394	416	440	465	491	520	549	579
	80 deg. DB	Low Side	126	129	132	134	137	139	141	143	145
	67 deg. WB	High Side	382	404	427	451	477	504	533	563	594
	85 deg. DB	Low Side	130	134	137	139	142	144	146	148	150
	72 deg. WB	High Side	395	418	442	467	494	522	552	583	615
Q48H1D	75 deg. DB	Low Side	119	122	124	127	130	132	134	135	136
	62 deg. WB	High Side	372	394	417	442	467	493	522	550	580
	80 deg. DB	Low Side	127	130	133	136	139	141	143	144	145
	67 deg. WB	High Side	382	404	428	453	479	506	535	564	595
	85 deg. DB	Low Side	131	135	138	141	144	146	148	149	150
	72 deg. WB	High Side	395	418	443	469	496	524	554	584	616
Q60H1D	75 deg. DB	Low Side	108	109	111	114	116	119	121	123	126
	62 deg. WB	High Side	378	395	413	435	458	485	513	544	577
	80 deg. DB	Low Side	115	117	119	122	124	127	129	132	135
	67 deg. WB	High Side	388	405	424	446	470	497	526	558	592
	85 deg. DB	Low Side	119	121	123	126	128	131	134	137	140
	72 deg. WB	High Side	402	419	439	462	486	514	544	578	613

Low side pressure ± 2 psig
High side pressure ± 5 psig

Tables are based upon rated CFM (airflow) across the evaporator coil. If there is any doubt as to correct operating charge being in the system, the charge should be removed, system evacuated and recharged to serial plate instructions.

① 75°F outdoor temperature condenser fan motor is running on low speed.

When the system is operating in the dehumidification mode, the suction pressure will be reduced by 4 to 8 psig and the discharge pressure will be reduced by 19 to 22 psig.

TABLE 11
HEATING PRESSURE
(All Temperatures in Degrees F)

Model	Return Air Temp.	Pressure	0	5	10	15	20	25	30	35	40	45	50	55	60	65
Q24H1D	70 deg	Low Side	35	42	49	56	62	69	76	83	89	96	103	110	116	123
		High Side	273	284	295	307	318	329	340	351	362	374	385	396	407	418
Q30H1D	70 deg	Low Side	33	40	47	54	61	67	74	81	88	95	102	109	116	122
		High Side	278	290	303	315	327	340	352	364	377	389	401	414	426	438
Q36H1D	70 deg	Low Side	33	40	47	53	60	67	74	80	87	94	100	107	114	121
		High Side	266	275	285	295	305	315	325	334	344	354	364	374	384	393
Q42H1D	70 deg	Low Side	29	36	42	49	56	63	70	77	83	90	97	104	111	117
		High Side	265	275	286	296	306	317	327	337	347	358	368	378	389	399
Q48H1D	70 deg	Low Side	31	37	44	51	58	64	71	78	85	92	98	105	112	119
		High Side	268	280	291	302	314	325	336	348	359	370	382	393	404	416
Q60H1D	70 deg	Low Side	22	30	37	44	52	59	66	73	81	88	95	103	110	117
		High Side	257	270	282	295	308	320	333	346	358	371	384	396	409	422

TABLE 12
DEHUMIDIFICATION RELAY LOGIC BOARD

	Inputs to Board										Outputs from Board							
	Notes	G	Y	B	W2	E1	A1	D	RAT		G1	BK	YO	RV	W	E1	A2	TWV
Cooling Mode Unoccupied	1	X	X				X				X	X	X				X	
Cooling Mode Occupied	1	X	X								X	X	X					
1st Stage Heating Occupied	2	X	X	X			X				X	X	X	X			X	
1st Stage Mode Unoccupied	2	X	X	X							X	X	X	X				
2nd Stage Heating Occupied	3	X	X	X	X		X				X	X	X	X	X		X	
2nd Stage Mode Unoccupied	3	X	X	X	X						X	X	X	X	X			
Emergency Heat					X	X					X	X			X	X		
Dehumidification Occupied	4						X	X			X		X				X	X
Dehumidification Unoccupied	4							X			5		5				5	5
Dehumidification w/ RAT closed								X	X		X	X	X		X			X
Fan Only Occupied		X					X				X						X	
Fan Only Unoccupied		X									X							

Notes
1. Cooling takes precedence over dehumidification. A cooling call will cancel dehumidification.
2. Dehumidification takes precedence over first stage heating.
3. A second stage heating call cancels dehumidification.
4. The relay logic board has a jumper on it to choose between fulltime dehumidification and occupied dehumidification only. With the jumper in the 1-2 position dehumidification is available fulltime. With the jumper in the 2-3 position dehumidification is available only when the room is occupied. The room is considered occupied when the A1 terminal is energized.
5. These outputs will be energized if the jumper is in the full time dehumidification position. They will be off if the jumper is in the occupied dehumidification only position.