WG - SERIES COMBINATION GAS/ELECTRIC WALL-MOUNT

INSTALLATION INSTRUCTIONS

MODELS:

W24G1-A	W24G1-B	W24G1-C	W30G1-A	W30G1-B	W30G1-C	W36G1-A
W36G1-B	W36G1-C	W42G1-A	W42G1-B	W42G1-C	W48G1-A	W48G1-B
W48G1-C	W60G1-A	W60G1-B	W60G1-C			

⚠ WARNING

READ ALL INSTRUCTIONS CAREFULLY BEFORE BEGINNING THE INSTALLATION.

THE INSTALLATION MUST COMPLY WITH THESE INSTRUCTIONS AND THE REQUIREMENTS OF ALL GOVERNING CODES AND ORDINANCES FOR THE INSTALLATION LOCATION.

IT IS THE RESPONSIBILITY OF INSTALLER TO KNOW AND UNDERSTAND ALL OF THESE REQUIREMENTS.

FAILURE TO DO SO COULD CREATE A HAZARD RESULTING IN PROPERTY DAMAGE, BODILY INJURY, OR DEATH.

INTERTEK ETL CM C US LISTED

Bard SINCE 1914 CLIMATE CONTROL SOLUTIONS

Bard Manufacturing Company, Inc.
Bryan, Ohio 43506

Since 1914...Moving ahead just as planned.

Manual No.: 2100-525A
Supersedes: 2100-525
File: Volume III, Tab 20
Date: 04-07-10

© Copyright 2010

CONTENTS

	Page
Getting Other Information and Publications	4
W**G Series Model Nomenclature	5
Ventilation Options	5
Air Conditioning Module Options	6
1. Important	6
2. Application	6
3. Duct Work	6 & 10
4. High Altitude Applications	10
5. Transportation Damage	10
6. Installation	10
7. Wall Mounting	11
8. Mounting the Unit	11
9. Clearances	17
10. Vent Terminal and Combustion Inlet Hood	18
11. Optional Vertical Venting	18
12. Vent Resizing Instructions	19
13. Fresh Air Intake	19
14. Condensate Drain	19
15. Wiring – Main Power	20
16. Wiring – Low Voltage Wiring	21
17. Thermostats	21
18. Gas Supply & Piping	26
19. Manifold Pressure Adjustment	27
20. Checking Gas Input Rate	27 & 28
21. Standard Orifice Sizing & High Altitude Derate	29
22. Conversion of Gas Input BTUH From High to Low Rating	32
23. Measuring Air Temperature Rise	32
24. Filters	33
25. Compressor Control Module	33 & 34
26. Lighting & Shutdown Instructions	36
27. Service Agency Procedures	36
28. Maintaining Unit in Good Working Order	36 & 37
29. Replacement Parts	37
30. Sequence of Operation – Heating	38
31. Sequence of Operation – Cooling	38
32. Indoor Blower Operation	39
33. Pressure Service Ports	47
34. Refrigerant Charge	48
35. Fan Blade Setting Dimensions	48
36. Low NOx Burner Assembly "N" Suffix Models Only – U.S. Installations Only	48
Index – Wiring Diagrams	49
Wiring Diagrams	50 – 67

CONTENTS

FIGURES — Page

Figure 1 Unit Dimensions 9
Figure 2 Mounting Instructions – W24-36G 12
Figure 2A Mounting Instructions – W42-60G 13
Figure 3 Combustible Clearance – W24-36G 14
Figure 3A Combustible Clearance – W42-60G 14
Figure 4 Wall Mounting Instructions 15
Figure 5 Wall Mounting Instructions 15
Figure 6 Common Wall Mounting Installations ... 16
Figure 7 Location of Vent Terminal in Shipping .. 17
Figure 8 Vent Terminal & Combustion Air Intake 18
Figure 9 Fresh Air Damper 19
Figure 10 Installation of Flexible Conduit 21
Figure 11 Low Voltage Wiring-No Vent Pkg. 22
Figure 12 Low Voltage Wiring 23
Figure 13 Low Voltage Wiring-EIFM Econo. 24
Figure 14 Gas Pipe Connection 25
Figure 15 Proper Piping Practice 26
Figure 16 Access Internal Filter through Upper Service Door 33
Figure 17 Lighting & Shutdown Instruction Label . 35
Figure 18 Top View of Gas Control 36
Figure 19 Sequence of Operation – Electronic Blower Control 38
Figure 20 Furnace Control Board & Blower Control 39
Figure 21 Fan Blade 48
Figure 22 Low NOx Insert 48

TABLES — Page

Table 1 Specifications – W24-36G Models 7
Table 1A Specifications – W42-60G Models 8
Table 2 Minimum Installation Clearances 17
Table 3 Thermostat Wire Size 21
Table 4 Wall Thermostat 21
Table 5 Length of Standard Pipe Threads 26
Table 6 Gas Pipe Sizes – Natural Gas 26
Table 7 Natural Gas Derate Capacities For All Models 29
Table 8 Natural Gas Orifice Tables – W24-36G .. 30
Table 8A Natural Gas Orifice Tables – W42-60G .. 31
Table 9 Motor Speed Taps 39
Table 10 W24G Indoor Blower Performance 40
Table 11 W30G Indoor Blower Performance 41
Table 12 W36G Indoor Blower Performance 42
Table 13 W42G Indoor Blower Performance 43
Table 14 W48G Indoor Blower Performance 44
Table 15 W60G Indoor Blower Performance 45
Table 16 Integrated Furnace & Blower Control Operation 46
Table 17A W24G1-W36G1 Cooling Pressure Table 47
Table 17B W42G1-W60G1 Cooling Pressure Table 47
Table 18 Refrigerant Charge 48
Table 19 Fan Blade Dimension 48

Getting Other Information and Publications

These publications can help you install the furnace. You can usually find these at your local library or purchase them directly from the publisher. Be sure to consult current edition of each standard.

National Fuel Gas Code ..... ANSI Z223.1 / NFPA 54

National Electrical Code ..... ANSI / NFPA 70

Standard for the Installation ..... ANSI / NFPA 90A
of Air Conditioning and Ventilating Systems

Standard for Warm Air ..... ANSI / NFPA 90B
Heating and Air Conditioning Systems

Standard for Chimneys, ... NFPA 211
Fireplaces, Vents, and Solid Fuel Burning Appliances

Load Calculation for..... ACCA Manual J
Residential Winter and Summer Air Conditioning

Duct Design for Residential ..... ACCA Manual D
Winter and Winter Air Conditioning and Equipment Selection

Canadian Electrical Code ..... CSA C22.1

Canadian Installation Code……CAN/CGA B149

FOR MORE INFORMATION, CONTACT THESE PUBLISHERS:

ACCA **Air Conditioning Contractors of America**
1712 New Hampshire Avenue, NW
Washington, DC 20009
Telephone: (202) 483-9370

ANSI **American National Standards Institute**
11 West Street, 13th Floor
New York, NY 10036
Telephone: (212) 642-4900
Fax: (212) 302-1286

ASHRAE **American Society of Heating Refrigerating, and Air Conditioning Engineers, Inc.**
1791 Tullie Circle, NE.
Atlanta, GA 30329-2305
Telephone: (404) 636-8400
Fax: (404) 321-5478

NFPA **National Fire Protection Association**
Batterymarch Park
P.O. Box 9101
Quincy, MA 02269-9901
Telephone: (800) 344-3555
Fax: (617) 984-7057

CSA **Canadian Standards Association**
178 Rexdale Boulevard
Rexdale, Ontario
Canada. M9W 1R3
Telephone: (416) 447-4044

COPYRIGHT JANUARY 2010
BARD MANUFACTURING COMPANY, INC.
BRYAN, OHIO 43506 USA

Manufactured under the following U.S. patent numbers:
5,485,878; 5,002,116

WALL MOUNT GAS/ELECTRIC GENERAL

MODEL NUMBER NOMENCLATURE

W 42 G 1 A X C X X X X X X

MODEL
Wall Mount

COOLING CAPACITY
24 = 2 ton
30 = 2½ ton
36 = 3 ton
42 = 3½ ton
48 = 4 ton
60 = 5 ton

GAS/ ELECTRIC

REVISION

FEATURE
(-) = Standard
D = Dehumidification
C = Canadian Approval

VOLTAGE
A = 230/208-60-1
B = 230/208-60-3
C = 460-60-3

EMISSIONS
X = Standard
N = NOx Certified

HEATING INPUT

2 - 3 Ton	3.5 - 5 Ton
A = 45,000	B = 75,000
B = 67,500	C = 100,000
C = 90,000	D = 125,000*

*125,000 BTU input model is not NOx certified.

VENT
(See Table Below)

FILTER
X = 2" Pleated (Standard)
W = 1" Washable

COLOR
X = Beige (Standard)
4 = Gray

OUTLET
X = Front (Standard)
T = Top

COIL OPTIONS
X = Standard
1 = Phenolic coated evaporator
2 = Phenolic coated condenser
3 = Phenolic coated both coils

CONTROL OPTIONS
(See Table page 6)

VENTILATION OPTIONS

Models		W24G, W30G, W36G	W42G, W48G, W60G
Description	**Factory Installed Code No.**	**Field Installed Part No.**	**Field Installed Part No.**
Barometric Fresh Air Damper	X	WGFAD-3	WGFAD-5
Blank-Off Plate	B	WGBOP-3A	WGBOP-5A
Motorized Fresh Air Damper	M	WGMFAD-3A	WGMFAD-5A
Commercial Ventilator - Spring Return	V	WGCRVS-3A	WGCRVS-5A
Commercial Ventilator - Power Return	P	WGCRVP-3A	WGCRVP-5A
Economizer - Fully Modulating ①	E	WGEIFM-3A	WGEIFM-5A
Energy Recovery Ventilator - 230 Volt	R	WGERV-A3A	WGERV-A5A
Energy Recovery Ventilator - 460 Volt	R	WGERV-C3A	WGERV-C5A

① Low ambient control is required with economizer for low temperature compressor operation.

AIR CONDITIONING MODULE OPTIONS

① CCM	② HPC	③ LPC	④ LAC	⑤ SK	Factory Installed Code	Field Installed Part
STD	STD	STD	•		H	CMA-28
				•	Field Only	SK111 or CMC-15

STD = Standard equipment.

① CCM Compressor control module has adjustable 30 second to 5 minute delay-on-break timer. On initial power up, or any time the power is interrupted, the delay-on-make will be 2 minutes plus 10% of the delay-on-break setting. There is no delay-on-make during routine operation of the unit. The module also provides the lockout feature (with 1 retry) for high and/or low pressure controls, and a 2-minute timed bypass for low pressure control.

② HPC High pressure control is auto reset. Always used with compressor control module (CCM) which is included. See note ①.

③ LPC Low pressure control is auto reset. Always used with compressor control module (CCM) which is included. See note ①.

④ LAC Low ambient control permits cooling operation down to 0°F.

⑤ SK CMC-15 is PTCR Start Kit can be used with all -A single phase models. Increases starting torque 2-3X. Not used for -B or -C 3-phase models. Do not use if SK111 is used.

⑤ SK SK111 Start Capacitor and Potential Relay Start Kit can be used with all -A single phase models. Increases starting torque 9x. Not used for -B or -C 3-phase models. Do not use if CMC-15 is used.

⚠ CAUTION

During the initial firing of the burners there will probably be some amount of smoke issued to the circulating air stream as the result of residual oil burning off of the heat exchanger tubes. This oil is required during the forming process of the stainless steel heat exchanger tubes to facilitate the bending. OSHA or the National Toxicology Program does not list the oil as a carcinogen. In vapor form this may be irritating to the eyes or could cause headaches. This is a one-time occurrence, and ventilation of the space may be required depending upon the space being conditioned.

1. IMPORTANT

The equipment covered in this manual is to be installed by trained, experienced service and installation technicians. All duct work or portions thereof not in the conditioned space should be properly insulated in order to both conserve energy and prevent condensation or moisture damage.

2. APPLICATION

This is a fan-assisted forced air gas furnace with electric air conditioning for outdoor installation. A fan-assisted furnace is equipped with an integral mechanical means to draw products of combustion through the combustion chamber and heat exchanger. The furnace installation must conform with local building codes and ordinances or, in their absence, with the National Fuel Gas Code ANSI Z223.1 or CAN/CGA-B149.1, latest edition, and the National Electrical Code ANSI/NFPA-7 or CSA C22.1, latest edition. It is the personal responsibility and obligation of the purchaser to contact a qualified installer to assure that installation is adequate and is in conformance with governing codes and ordinances.

3. DUCT WORK

The unit is designed for use with or without duct work. See Warning on Page 10. Flanges are provided for attaching the supply and return ducts. These instructions explain the recommended method to install the air cooled self-contained electric air conditioning and gas heating unit and the electrical wiring connections and gas piping to the unit. The refrigerant system is completely assembled and charged. All internal wiring is complete.

These instructions and any instructions packaged with any separate equipment required to make up the entire heating/cooling system should be carefully read before beginning the installation. Note particularly “Starting Procedure” and any tags and/or labels attached to the equipment.

All duct work, supply and return, must be properly sized for the design airflow requirement of the equipment. Air Conditioning Contractors of America (ACCA) is an excellent guide to proper sizing.

Refer to Tables 10, 11, 12, 13, 14 and 15 in this Manual for maximum static pressure available for duct design.

TABLE 1
SPECIFICATIONS
W24G, W30G AND W36G MODELS

Model	W24G1-A	W24G1-B	W24G1-C	W30G1-A	W30G1-B	W30G1-C	W36G1-A	W36G1-B	W36G1-C
Electrical Rating – 60HZ	230/208-1	230/208-3	460-3	230/208-1	230/208-3	460-3	230/208-1	230/208-3	460-3
Operating Voltage Range	197-253	197-253	414-506	197-253	197-253	414-506	197-253	197-253	414-506
Minimum Circuit Ampacity	21	16	9	23	17	10	28	25	11
** Delay Fuse or Circuit Breaker Max.	30	25	15	35	25	15	45	40	15
Compressor									
Volts	230/208-1	230/208-3	460-3	230/208-1	230/208-3	460-3	230/208-1	230/208-3	460-3
Rated Load Amps	9.9/10.9	6.4/7.1	3.9	11.8/12.9	7.5/8.2	4.7	15.3/16.7	13.3/14.6	5.1
Branch Circuit Selection Current	12.8	8.3	5.1	14.1	9.0	5.6	17.9	15.6	6.0
Lock Rotor Amps	64	58	28	77	71	38	112	110	44
Energy Recovery Ventilator									
Volts	230/208-60-1			230/208-60-1			230/208-60-1		
Full Load Amps (3-motors)	2.2			2.2			2.2		
Fan Motor									
Horsepower	1/5			1/5			1/5		
Volts	230/208-60-1		460-60-1	230/208-60-1		460-60-1	230/208-60-1		460-60-1
Full Load Amps	1.5		0.8	1.5		0.8	1.5		0.8
CFM	2400			2400			2400		
Blower Motor									
Horsepower	1/4			1/4			1/4		
Volts	230/208-60-1		460-60-1	230/208-60-1		460-60-1	230/208-60-1		460-60-1
Full Load Amps	1.8		0.8	2.2		1.1	2.2		1.1

* 75 degree C Copper wire size
** Maximum time delay fuse or HACR Type circuit breaker

TABLE 1A
SPECIFICATIONS
W42G, W48G AND W60G MODELS

Model	W42G1-A	W42G1-B	W42G1-C	W48G1-A	W48G1-B	W48G1-C	W60G1-A	W60G1-B	W60G1-C
Electrical Rating – 60HZ	230/208-1	230/208-3	460-3	230/208-1	230/208-3	460-3	230/208-1	230/208-3	460-3
Operating Voltage Range	197-253	197-253	414-506	197-253	197-253	414-506	197-253	197-253	414-506
Minimum Circuit Ampacity	31	23	11	34	25	12	40	28	14
** Delay Fuse or Circuit Breaker Max.	50	35	15	50	35	15	60	40	20
Compressor									
Volts	230/208-1	230/208-3	460-3	230/208-1	230/208-3	460-3	230/208-1	230/208-3	460-3
Rated Load Amps	15.5/17.5	10.2/11.5	4.8	19.3/21.4	13.1/14.5	6.4	21.6/24.7	12.8/14.7	7.8
Branch Circuit Selection Current	19.9	13.1	6.1	21.4	14.5	6.4	26.3	15.6	7.8
Lock Rotor Amps	109	83.1	41	135	98	55	134	110	52
Energy Recovery Ventilator									
Volts	230/208-60-1			230/208-60-1			230/208-60-1		
Full Load Amps (3-motors)	2.2			2.2			2.2		
Fan Motor									
Horsepower	1/3			1/3			1/3		
Volts	230/208-60-1		460-60-1	230/208-60-1		460-60-1	230/208-60-1		460-60-1
Full Load Amps	2.5		1.3	2.5		1.3	2.5		1.3
CFM	3050			3050			3050		
Blower Motor									
Horsepower	1/3			1/3			1/3		
Volts	230/208-60-1		460-60-1	230/208-60-1		460-60-1	230/208-60-1		460-60-1
Full Load Amps	3.4		1.5	3.4		1.5	3.4		1.5

* 75 degree C Copper wire size
** Maximum time delay fuse or HACR Type circuit breaker

FIGURE 1
UNIT DIMENSIONS

UNIT	A	B	C	D	E	F	G	H	I	J	K	L	M	N	O	P	Q	R
W24G-W30G-W36G	7.88	27.88	13.88	24.25	40	14.88	25.63	81.63	30	27.38	27.5	14.12	15.44	15.31	39.25	4.5	2.5	5.88
W42G-W48G-W60G	9.88	29.88	15.88	27.25	43.81		31.63	87.5		33.38	28.75				42.88			3.75

UNIT	S	T	U	V	W	X	Y	Z	AA	BB	CC	DD	EE	FF	GG	HH	II
W24G-W30G-W36G	12 - 7 HOLES	3.75	2.88	22.9	38	17.84	4.44	2.25	11.44	3.25	9	7.25	36.25	1.13	1.25	2	0.38
W42G-W48G-W60G	16 - 6 HOLES		3.88	24.9	42	17.34	8.44		12.19		10		40.25			2.75	0.44

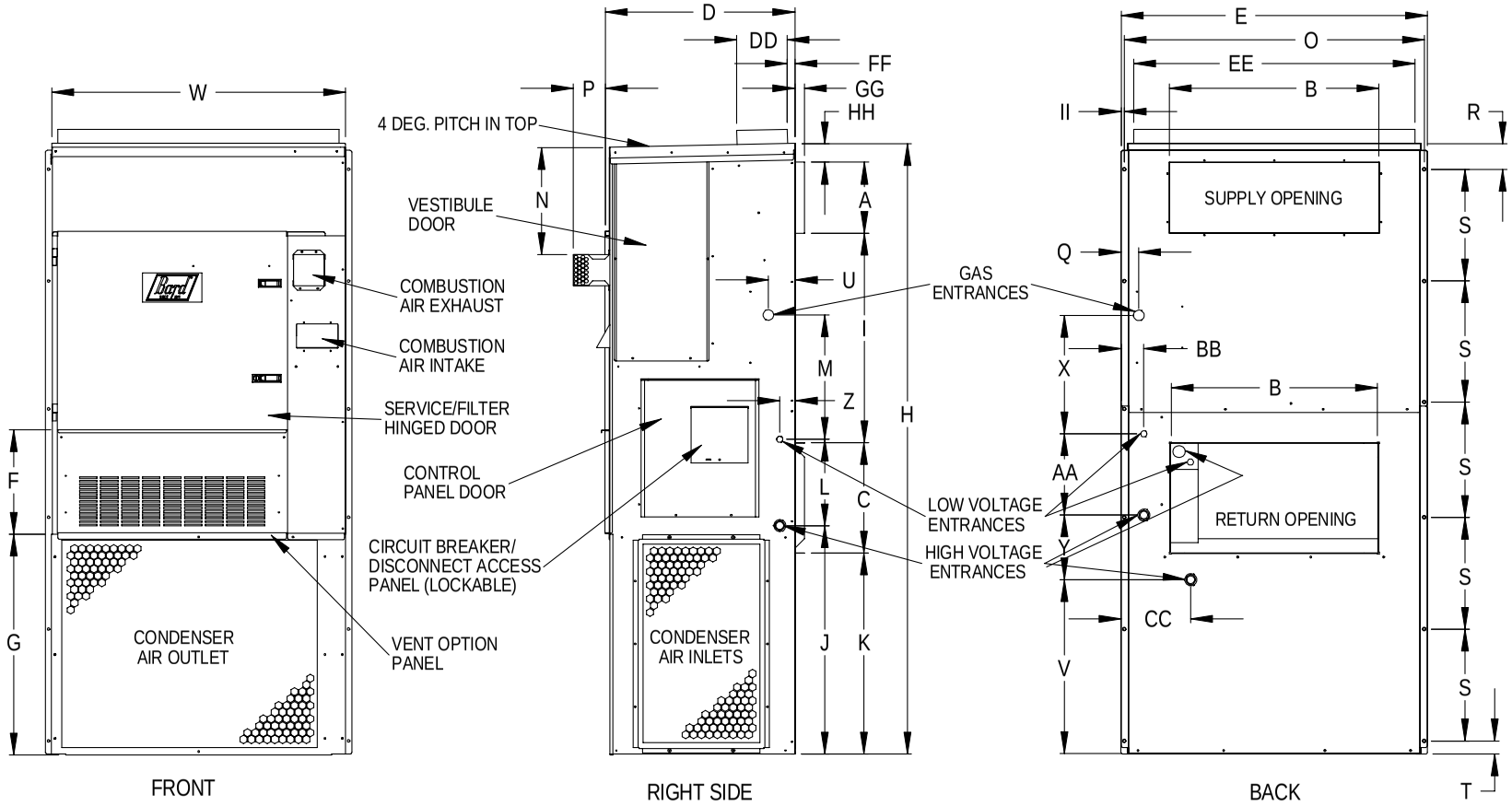

⚠WARNING

In all cases, there must be a metal duct connection made to the supply air flange, and a one inch clearance to combustibles must be maintained to this duct connection.

For free blow applications, a metal sleeve must be used in the wall opening itself, again maintaining a one inch clearance to combustibles.

Failure to use the sheet metal can cause fire resulting in property damage, injury, or death.

See Figure 3 and clearance information in Section 9 and Table 2 for additional information.

Design the duct work according to methods given by the Air Conditioning Contractors of America (ACCA). When duct runs through unheated spaces, it should be insulated with a minimum of one-inch of insulation. Use insulation with a vapor barrier on the outside of the insulation. Flexible joints should be used to connect the duct work to the equipment in order to keep the noise transmission to a minimum.

A one-inch clearance to combustible material for the first three feet of duct attached to the outlet air frame is required. See Wall Mounting Instructions and Figures 2, 2A, 3 and 3A for further details.

Ducts through the walls must be insulated and all joints taped or sealed to prevent air or moisture entering the wall cavity.

Some installations may not require any return air duct. A metallic return air grille is required with installations not requiring a return air duct. The spacing between louvers on the grille shall not be larger than 5/8 inch.

Any grille that meets with the 5/8 inch louver criteria may be used. It is recommended that Bard Return Air Grille or Return Filter Grille be installed when no return duct is used. Contact distributor or factory for ordering information. If using a return air filter grille, filters must be of sufficient size to allow a maximum velocity of 400 fpm.

NOTE: If no return air duct is used, applicable installation codes may limit this cabinet to installation only in a single story structure.

4. HIGH ALTITUDE APPLICATIONS

Ratings of gas utilization equipment are based on sea level operation and need not be changed for operation at elevations up to 6,000 feet. For operation at elevations above 6,000 feet and in the absence of specific recommendations from the local authority having jurisdiction, equipment ratings shall be reduced as specified in Section 21.

5. TRANSPORTATION DAMAGE

All units are packed securely in shipping container. All units should be carefully inspected upon arrival for damage. In the event of damage, the consignee should:

1. Note on delivery receipt of any damage to container.
2. Notify carrier promptly, and request an inspection.
3. In case of concealed damage, the carrier must be notified as soon as possible within 15 days after delivery.
4. Claims for any damage, apparent or concealed, should be filed with the carrier, using the following supporting documents:
   - A. Original Bill of Lading, certified copy, or indemnity bond.
   - B. Original paid freight bill of indemnity in lieu thereof.
   - C. Original invoice or certified copy thereof showing trade and other discounts or deductions.
   - D. Copy of the inspection report issued by carrier's representative at the time damage is reported to carrier.

6. INSTALLATION

Size of unit for proposed installation should be based on heat loss/heat gain calculations made according to methods of Air Conditioning Contractors of America (ACCA). The air duct should be installed in accordance with the Standards of the National Fire Protection Association for the Installation of Air Conditioning and Ventilating Systems of Other Than Residence Type, NFPA No. 90A, and Residence Type Warm Air Heating and Air Conditioning Systems, NFPA No. 90B. Where local regulations are at a variance with instructions, installer should adhere to local codes.

7. WALL MOUNTING INFORMATION

1. Two holes for the supply and return air openings must be cut through the wall as detailed in Figure 4.
2. On wood-frame walls, the wall construction must be strong and rigid enough to carry the weight of the unit without transmitting any unit vibration.
3. Concrete block walls must be thoroughly inspected to insure that they are capable of carrying the weight of the installed unit.

8. MOUNTING THE UNIT

1. These units are secured by wall mounting brackets which secure the unit to the outside wall surface at both sides. A bottom mounting bracket is provided for ease of installation but is not required.

⚠ CAUTION

If the bottom bracket is used, be certain the bracket is secured to the outside wall surface in a way sufficient to support the entire weight of the unit during installation until side mounting brackets are secured.

2. The W42G, W48G and W60G models are suitable for 0 inch clearance on the installation mounting wall and to the top. For all models the supply air duct flange and the first 3 feet of supply air duct require a minimum of 1-inch clearance to combustible material. The W24G, W30G and W36G models are suitable for 0 inch clearance on the installation mounting wall, but require 1-inch clearance to the top if combustible material overhang projects above the unit. See Figure 3 and 3A. If a combustible wall, use a minimum of Figure 1 “A” dimension plus 2 inches and “B” dimension plus 2 inches. See Figures 4 and 5 for details.

⚠ WARNING

Failure to provide the one inch clearance between the supply duct and a combustible surface for the first three feet of duct can result in fire causing damage, injury or death.

3. Locate and mark lag bolt locations and bottom mounting bracket location.
4. Mount bottom mounting bracket.
5. Hook top rain flashing under back bend of top. Top rain flashing is shipped secured to the right side of the back.
6. Position unit in opening and secure with 5/16 lag bolts; use 7/8 inch diameter flat washers on the lag bolts. Use lag bolts long enough to support the unit’s weight when mounted to the structure. This length may be dependant on the type of construction.
7. Secure rain flashing to wall and caulk across entire length of top. See Figure 3.
8. On side-by-side installations, maintain a minimum of 20 inches clearance on right side to allow access to control panel and burner compartment, and to allow proper airflow to the outdoor coil. Additional clearance may be required to meet local or national codes.

FIGURE 2
MOUNTING INSTRUCTIONS
FOR W24G, W30G AND W36G

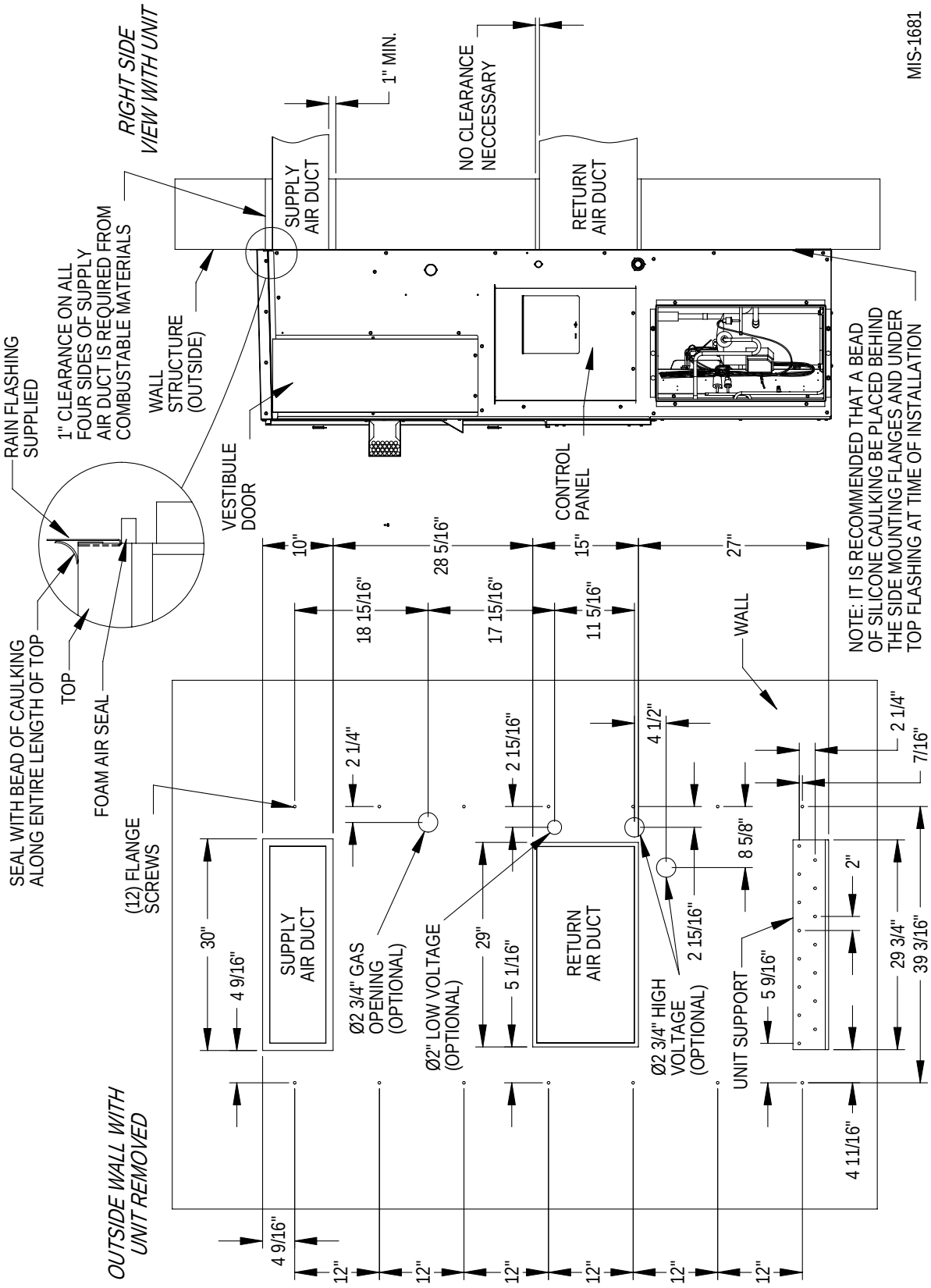

FIGURE 2A
MOUNTING INSTRUCTIONS
FOR W42G, W48G AND W60G

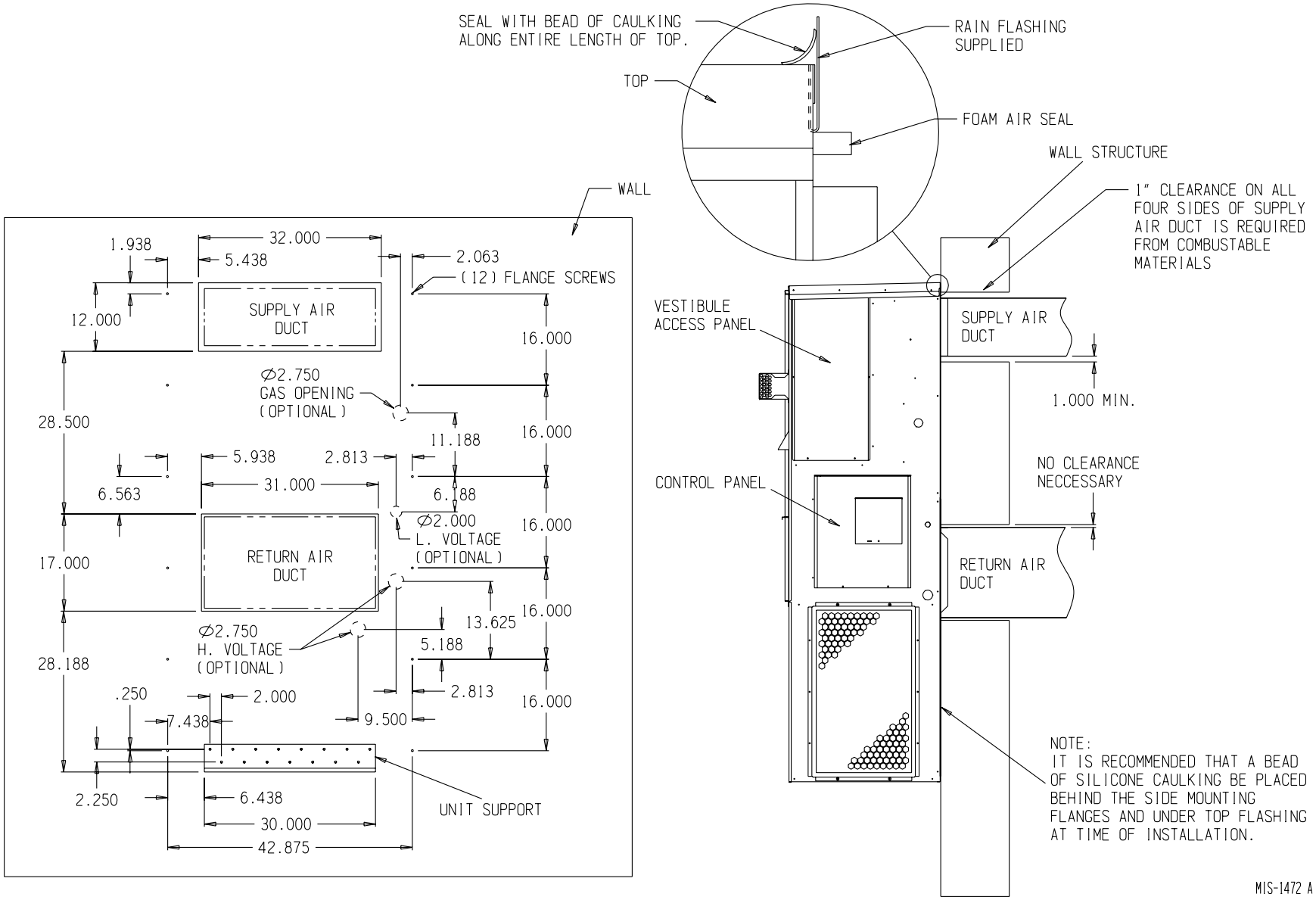

FIGURE 3
COMBUSTIBLE CLEARANCE
FOR W24G, W30G AND W36G MODELS

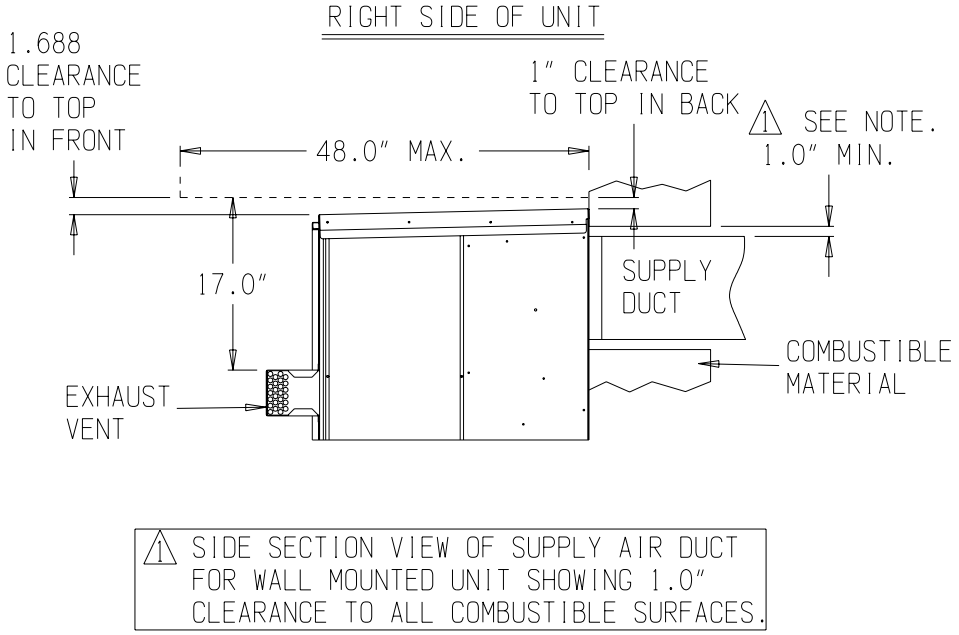

FIGURE 3A
COMBUSTIBLE CLEARANCE
FOR W42G, W48G AND W60G MODELS

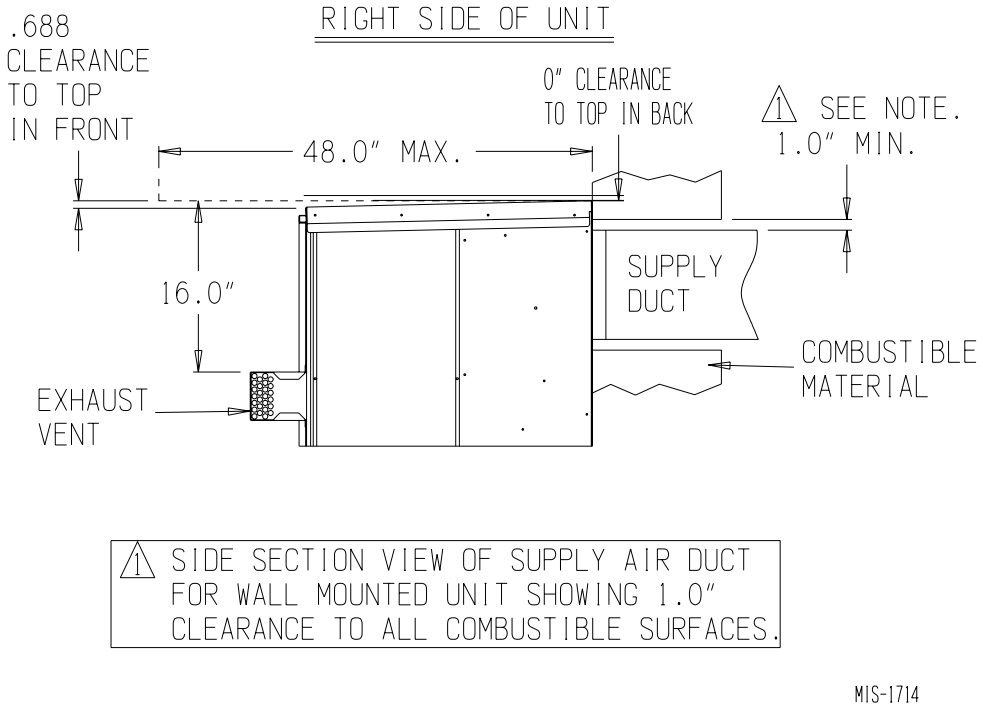

⚠ WARNING

A ***minimum*** of one (1) inch clearance must be maintained between the supply air duct and combustible materials. This is required for the first three (3) feet of ducting.

It is important to insure that the one (1) inch minimum spacing is maintained at all points.

Failure to do this could result in overheating the combustible material and may result in a fire causing damage, injury or death.

FIGURE 4
WALL MOUNTING INSTRUCTIONS

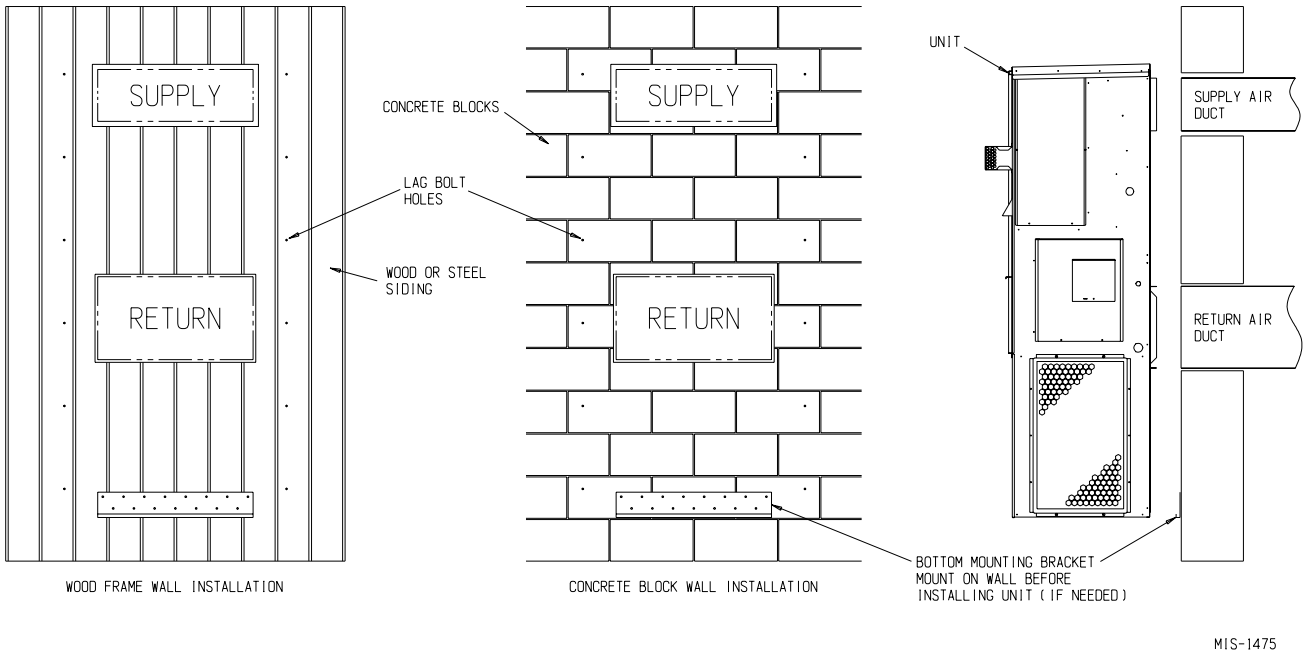

FIGURE 5
WALL MOUNTING INSTRUCTIONS

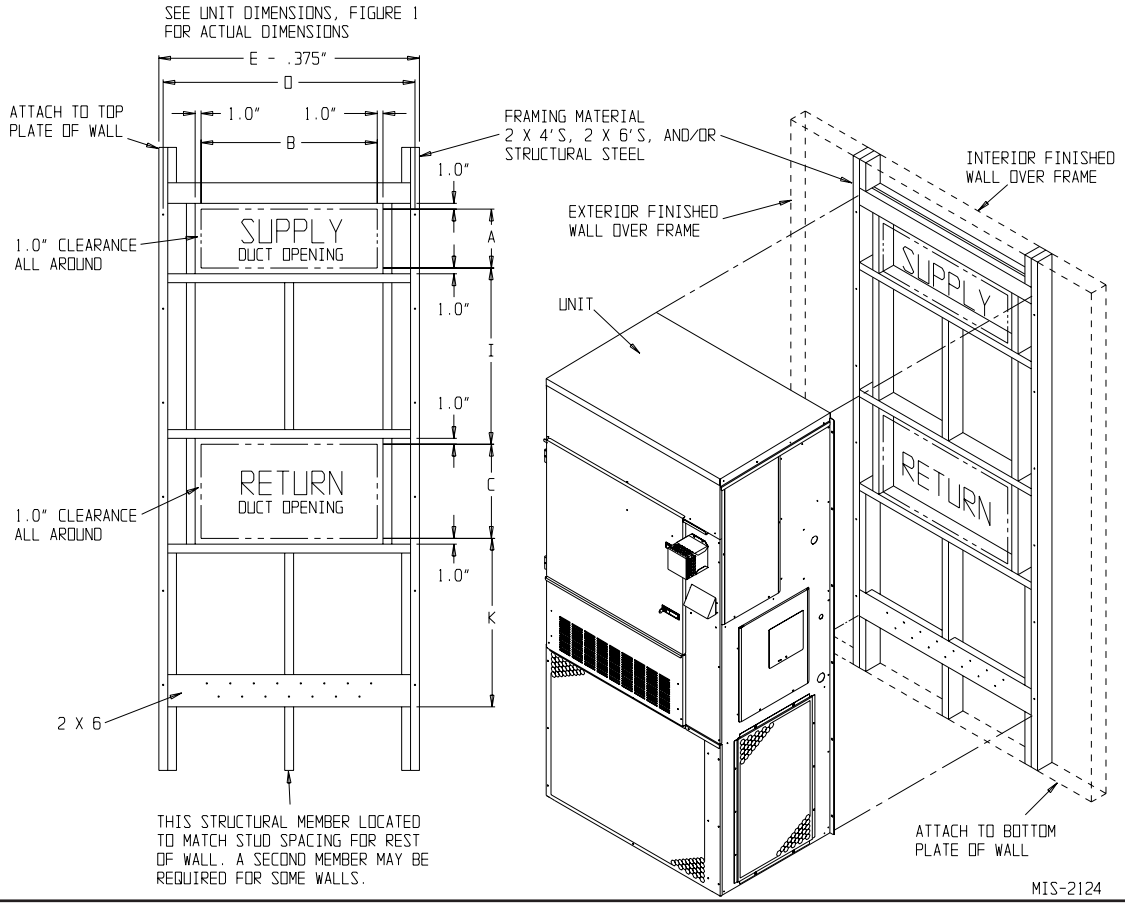

FIGURE 6
COMMON WALL MOUNTING INSTALLATIONS

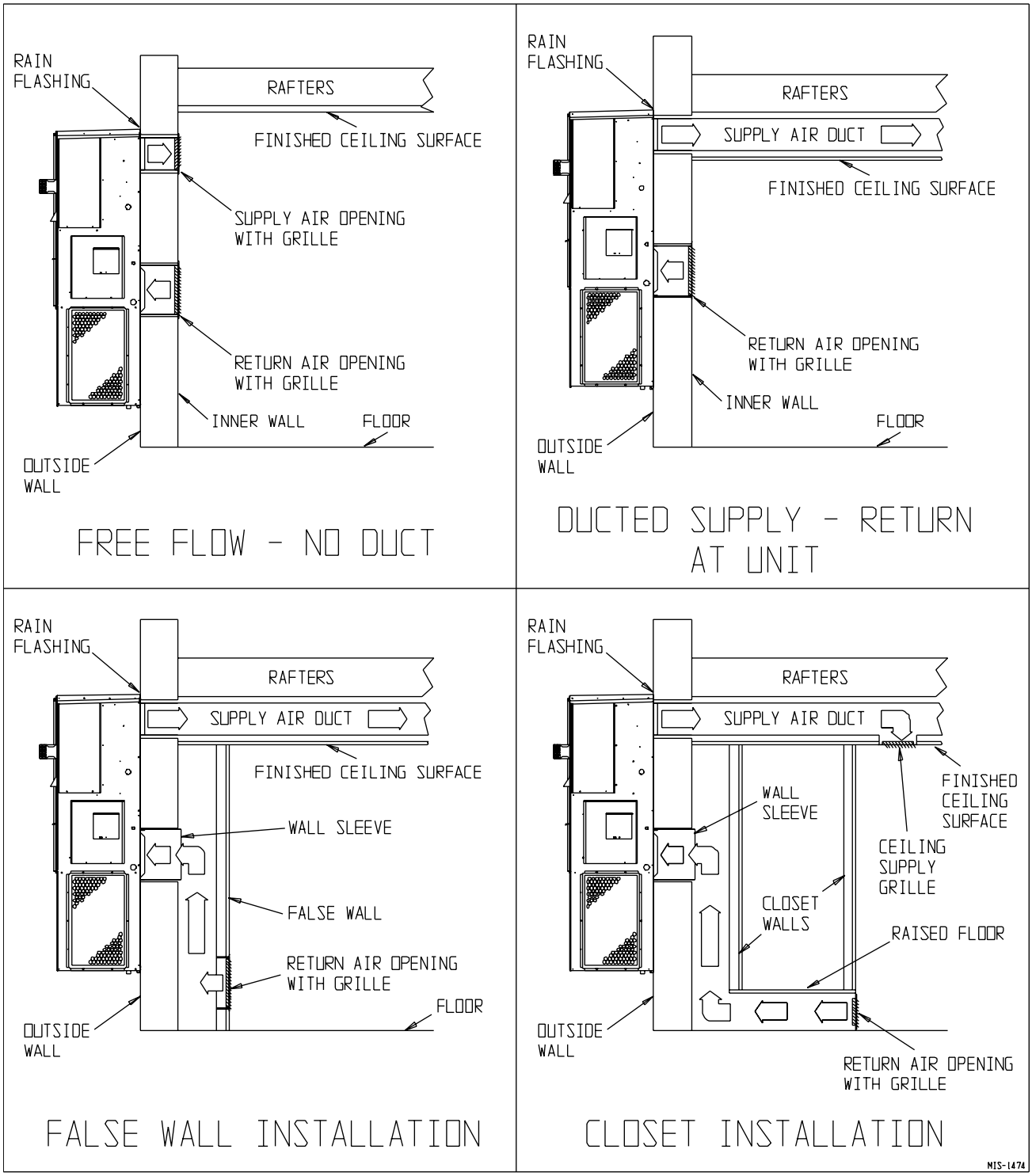

9. CLEARANCES

Minimum clearances, as specified in Table 2, must be maintained from adjacent structures to provide adequate fire protection, adequate combustion air, and room for service personnel.

While minimum clearances are acceptable for safety reasons, they may not allow adequate air circulation around the unit for proper operation in the cooling mode. Whenever possible, it is desirable to allow additional clearance, especially around the condenser inlet and discharge openings. DO NOT install the unit in a location that will permit discharged air from the condenser to recirculate to the condenser inlet.

TABLE 2
MINIMUM INSTALLATION CLEARANCES

Outlet Duct (from combustible materials)	1 inch first 3 feet
Vent Terminal (from combustible materials)	* 17 inches
Condenser Outlet	20 inches
Top	See Figure 3
Burner Service	20 inches
Combustible Base (Wood or Class A, B or C roof covering material)	0 inches
* See Figures 3 and 3A	

⚠ WARNING

Clearances from combustible materials must be maintained as specified. Failure to maintain clearances could cause fire resulting in property damage, injury, or death.

FIGURE 7
LOCATION OF VENT TERMINAL IN SHIPPING

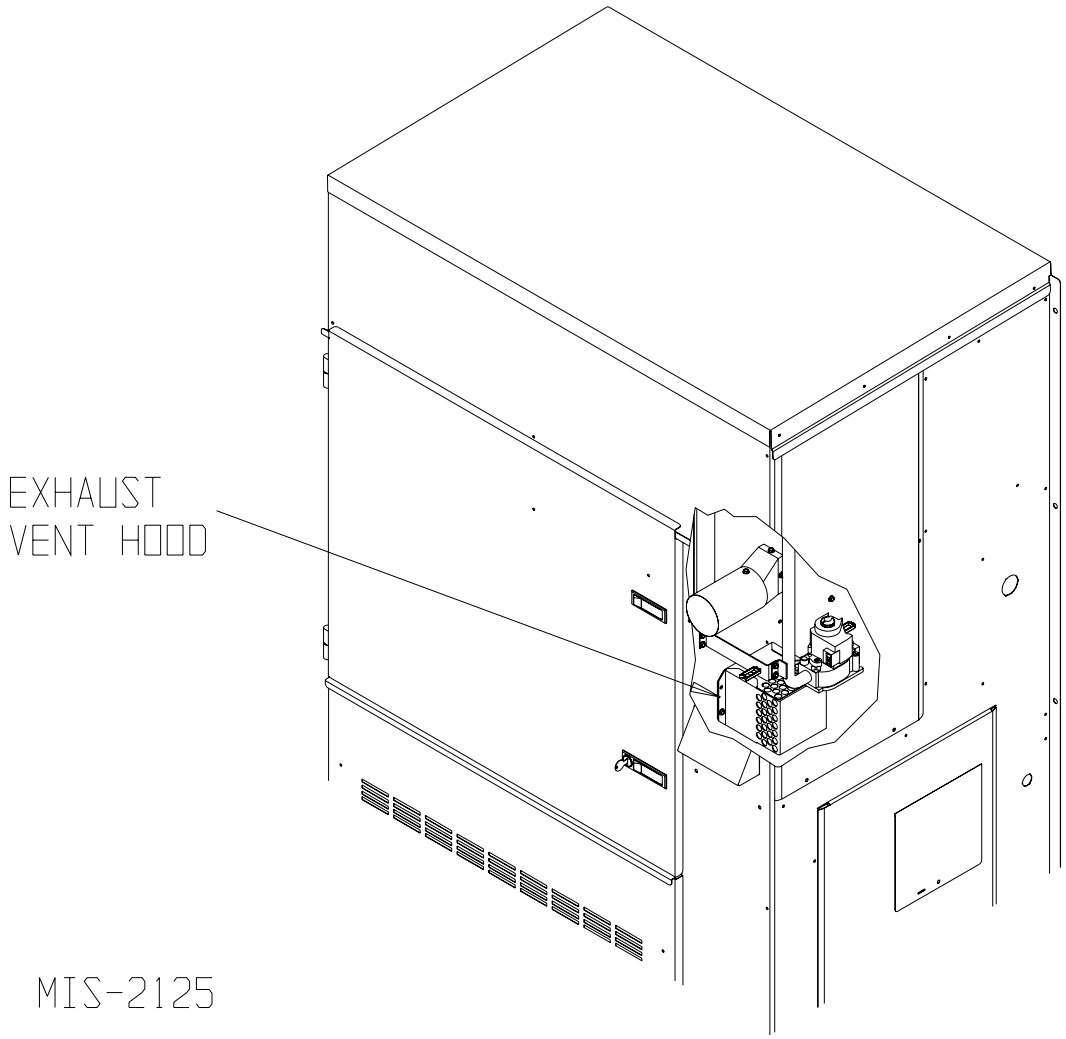

10. VENT TERMINAL AND COMBUSTION AIR INLET HOOD

The vent terminal is shipped in the burner compartment. See Figure 7. Remove the two shipping screws and separate the two-piece assembly. Install the vent terminal by using the four screws provided. **Do not cut or trim gasket. Make sure gasket is in place**. See Figure 8. The combustion air intake hood is factory installed.

11. OPTIONAL VERTICAL VENTING

With the optional vertical venting kit (VVK-5) this unit may be vented vertically through a roof or overhang. The kit includes a stainless steel transition drain tee, silicone sealant, and drain tubing.

If unit is installed with vertical vent kit, annually inspect the vent system and drain. Replace any portion of the vent system that shows signs of deterioration. Make sure drain is open and free of obstruction.

⚠ CAUTION

Vent terminal must be installed as shown in Figure 8 for proper operation of the heating system.

NOTE: The inner vent hood gasket is designed to stretch over and seal around the combustion air blower outlet. This is a very critical seal to prevent water and flue products from entering the unit. Care must be taken to insure this gasket is in place and sealing properly.

FIGURE 8
VENT TERMINAL AND COMBUSTION AIR INTAKE

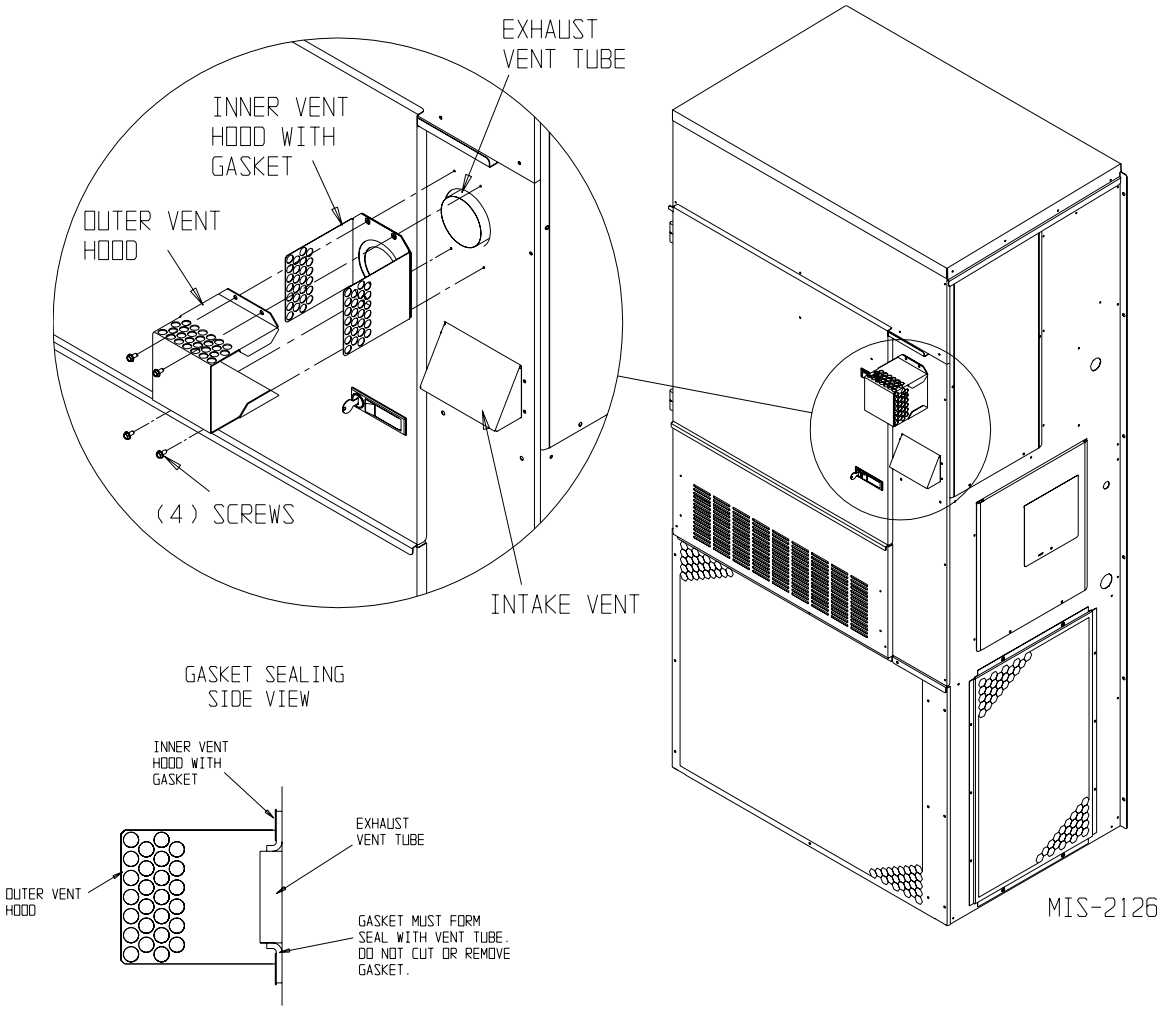

12. VENT RESIZING INSTRUCTIONS

When an existing furnace is removed from a venting system servicing other appliances, the venting system is likely to be too large to properly vent the remaining attached appliances.

The following steps shall be followed with each of the appliances remaining connected to the common venting system, placed in operation one at a time while the other appliances remaining connected to the common venting system are not in operation.

1. Seal any unused openings in the venting system.
2. Inspect the venting system for proper size and horizontal pitch, as required in the National Fuel Gas code, ANSI Z223.1 or the CAN/CGA B149 Installation Codes and these instructions. Determine that there is no blockage or restriction, leakage, corrosion and other deficiencies which could cause an unsafe condition.
3. In so far as is practical, close all building doors and windows and all doors between the space in which the appliance(s) connected to the venting system are located and other spaces of the building. Turn on clothes dryers and any appliances not connected to the venting system. Turn on any exhaust fans, such as range hoods and bathroom exhausts, so they will operate at maximum speed. Do not operate a summer exhaust fan. Close fireplace dampers.
4. Follow the lighting instructions. Place the appliance being inspected in operation. Adjust thermostat so appliance shall operate continuously.
5. Test for draft hood equipped appliance spillage at the draft hood relief opening after 5 minutes of main burner operation. Use the flame of a match or candle.
6. After it has been determined that each appliance connected to the venting system properly vents when tested as outlined above, return doors, windows, exhaust fans, fireplace dampers and any other gas-burning appliances to their previous conditions of use.
7. If improper venting is observed during any of the above tests, the venting system must be corrected.

13. FRESH AIR INTAKE

All units are built with fresh air inlet slots punched in the service panel.

If the unit is equipped with a fresh air damper assembly, the assembly is shipped already attached to the unit. The damper blade is locked in the closed position. To allow the damper to operate, the maximum and minimum blade position stops must be installed. See Figure 9.

All capacity, efficiency and cost of operation information as required for Department of Energy "Energyguide" Fact Sheets is based upon the fresh air blank-off plate in place and is recommended for maximum energy efficiency.

The blank-off plate is available upon request from the factory and is installed in place of the fresh air damper shipped with each unit.

One of several other ventilation options may be installed. Refer to model number and/or supplemental installation instructions.

14. CONDENSATE DRAIN

A plastic drain hose extends from the drain pan at the top of the unit down to the unit base. There are openings in the unit base for the drain hose to pass through. In the event the drain hose is connected to a drain system of some type, it must be an open or vented type system to assure proper drainage.

FIGURE 9
FRESH AIR DAMPER

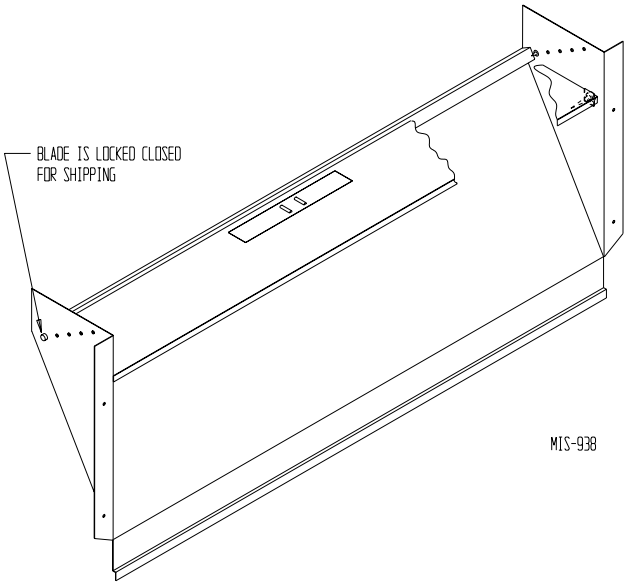

15. WIRING – MAIN POWER

⚠WARNING

For your personal safety, turn off electric power at service entrance panel before making any electrical connections. Failure to do so could result in electric shock or fire.

Refer to unit rating plate for wire sizing information and maximum fuse or "HACR" type circuit breaker size. Each outdoor unit is marked with a "Minimum Circuit Ampacity". This means that the field wiring used must be sized to carry that amount of current. All models are suitable only for connection with copper wire. Each unit and/or wiring diagram will be marked - "*Use Copper Conductors Only*". These instructions ***must be*** adhered to. Refer to the National Electrical Code (NEC) for complete current carrying capacity data on the various insulation grades of wiring material. All wiring must conform to NEC and all local codes.

The electrical data lists fuse and wire sizes (75° C copper) for all models.

The unit rating plate lists a "Maximum Time Delay Relay Fuse" or "HACR" type circuit breaker that is to be used with the equipment. The correct size must be used for proper circuit protection and also to assure that there will be no nuisance tripping due to the momentary high starting current of the compressor motor.

The disconnect access door on this unit may be locked to prevent unauthorized access to the disconnect. To convert for the locking capability bend the tab located in the bottom left hand corner of the disconnect opening under the disconnect access panel straight out. This tab will now line up with the slot in the door. When shut, a padlock may be placed through the hole in the tab preventing entry.

See "Start Up" section for important information on three phase scroll compressor start ups.

⚠WARNING

Failure to provide an electrical power supply shut off means could result in electric shock or fire.

ELECTRICAL GROUNDING

When installed, the furnace must be electrically grounded in accordance with local codes or in the absence of local codes, with the National Electrical Code, ANSI/NFPA 70, or Canadian Electrical Code, CSA22.1, latest edition. Use a copper wire from green ground wire on the furnace to a grounded connection in the service panel or a properly driven and electrically grounded ground rod. See Tables 1 & 1A for proper ground wire size.

⚠WARNING

Failure to provide a proper electrical ground could result in electric shock or fire.

FIELD INSTALLED EQUIPMENT

Wiring to be done in the field between the furnace and devices not attached to the furnace, or between separate devices which are field installed and located, shall conform with the temperature limitation for Type T wire {63 degrees F rise (36 degrees C)} when installed in accordance with the manufacturer's instructions.

INSTALLATION OF FLEXIBLE CONDUIT THROUGH RETURN AIR OPENING

NOTE: To allow proper clearance between the control panel and any vent options, 90° conduit fittings must be used on the back of the control panel.

INSTALLING CONDUIT (See Figure 10.)

1. Remove conduit access panel if required to gain access to area behind control panel.
2. Remove low voltage and high voltage knockouts located in rear of control panel.
3. Run low voltage conduit through 7/8 bushing located in conduit entrance plate and secure to low voltage opening in rear of control panel.
4. Run high voltage conduit through 1-3/4 bushing located in conduit entrance plate and secure to high voltage opening in rear of control panel.
5. Replace conduit access panel if required to complete installation.
6. Seal around conduit in conduit entrance plate.

FIGURE 10
INSTALLATION OF FLEXIBLE CONDUIT

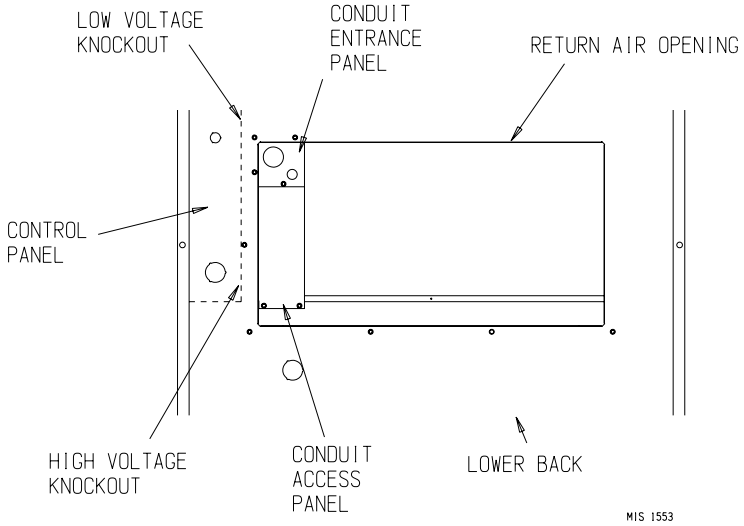

16. WIRING – LOW VOLTAGE WIRING

Low Voltage Connection

These units use a 24-volt AC low voltage circuit. The "R" terminal is the *hot* terminal and the "C" terminal is *grounded*.
"G" terminal is the *fan input*.
"Y1" terminal is the *compressor input*.
"R" terminal is 24 *VAC hot*.
"C" terminal is 24 *VAC grounded*.
"A" terminal is the *ventilation input*. This terminal energizes any factory or field installed vent option.
"W1" terminal is the *heat input*.

230/208 VOLT UNITS

All models are equipped with dual primary voltage transformers. All equipment leaves the factory wired on 240V tap. For 208V operation, reconnect from 240V to 208V tap. The acceptable operating voltage range for the 240V and 208V taps are:

TAP	RANGE
240	253 – 206
208	220 – 187

NOTE: The voltage should be measured at the field power connection point in the unit and while the unit is operating at full load (maximum amperage operating condition).

460 VOLT UNITS

All models are equipped with single primary voltage transformers and no rewiring is required.

Direct Digital Controls (DDC)

For total and proper control using DDC, a total of 5 controlled outputs are required (4 if no ventilation is installed).

LOW VOLTAGE CONNECTIONS FOR DDC CONTROL	
Fan Only	Energize G
Cooling Mode	Energize G, Y1
Heating Mode	Energize W1
Ventilation	Energize G, A

17. THERMOSTATS

TABLE 3
THERMOSTAT WIRE SIZE

Transformer VA	FLA	Wire Gauge	Maximum Distance In Feet
55	2.3	20 gauge	45
		18 gauge	60
		16 gauge	100
		14 gauge	160
		12 gauge	250

TABLE 4
WALL THERMOSTAT

Thermostat	Predominate Features
8403-057 TH3110D1040	1 stage heat, 1 stage cool System: heat-off-cool Fan: on-auto Electronic Non-Programmable
8403-058 TH5220D1151	2 stage cool, 2 stage heat Electronic Non-Programmable HP or Conventional Auto or Manual changeover
8403-060 1120-445	3 stage cool; 3 stage heat Programmable/Non-Programmable Electronic HP or Conventional Auto or Manual changeover

FIGURE 11
LOW VOLTAGE WIRING

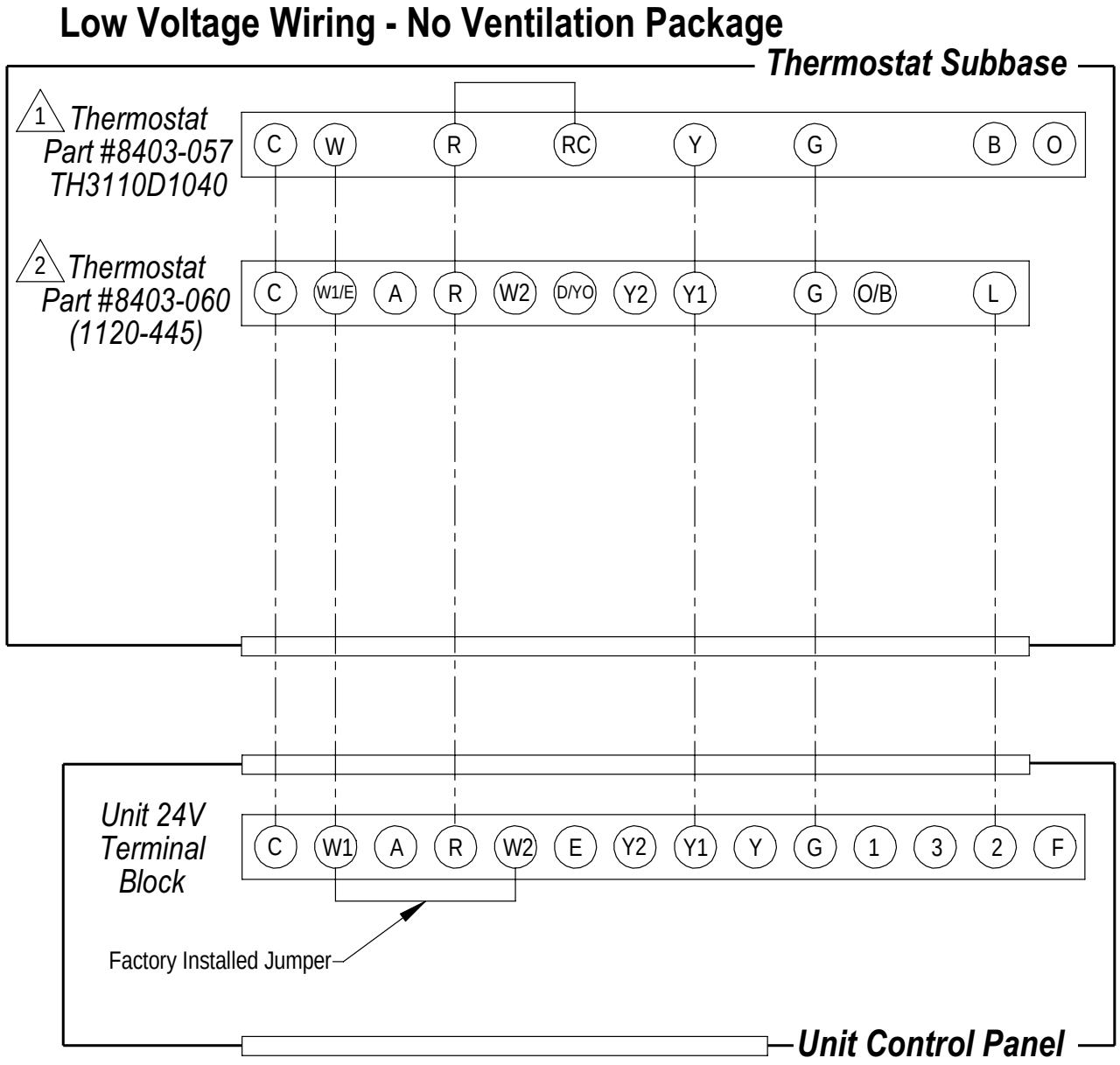

1 SET SWITCH ON THERMOSTAT TO "GAS-OIL"

2 CONFIGURE THERMOSTAT FOR HEAT/COOL

MIS-2774

FIGURE 12
LOW VOLTAGE WIRING

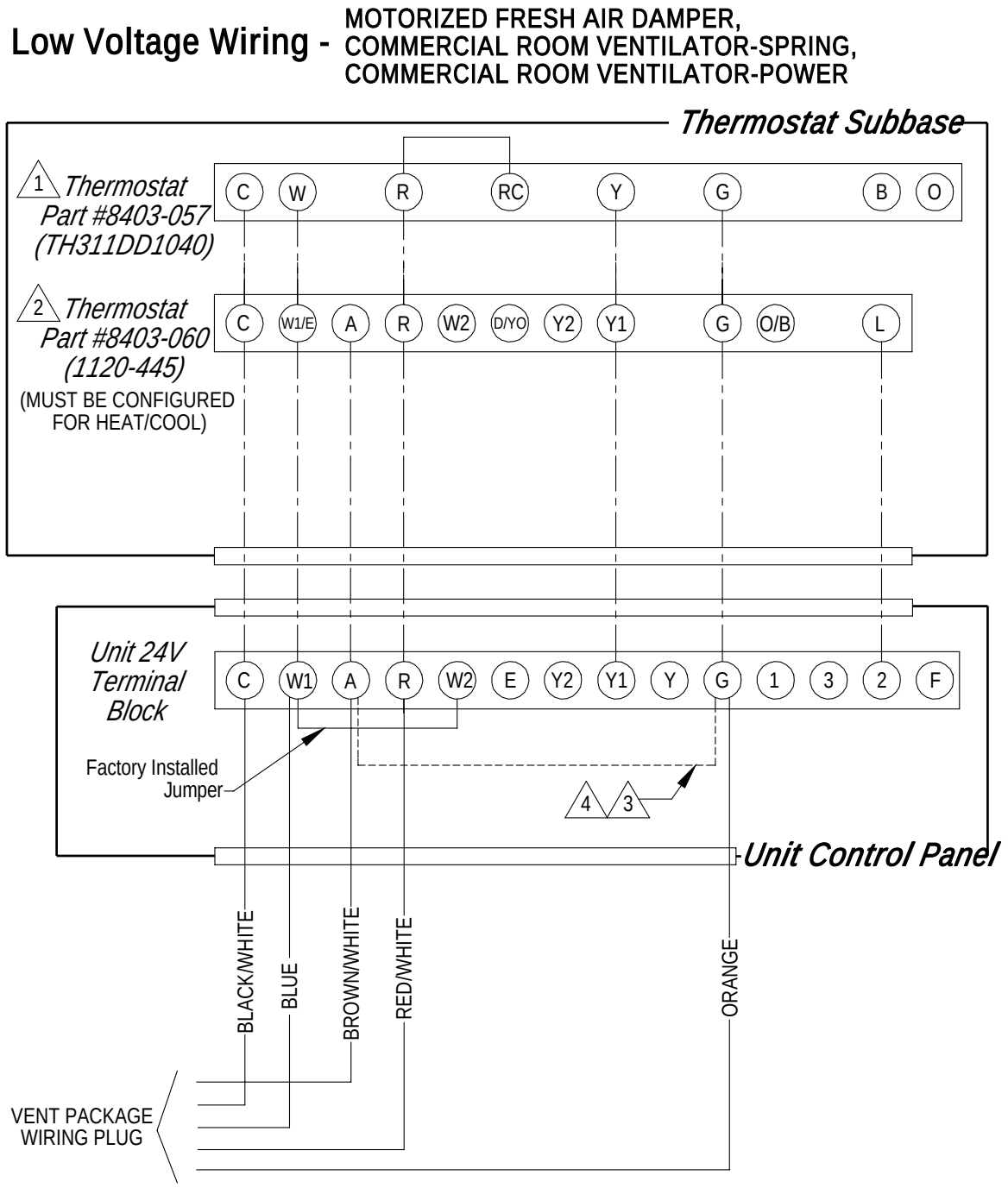

1 SET SWITCH ON THERMOSTAT TO "GAS-OIL"

2 CONFIGURE THERMOSTAT FOR HEAT/COOL

3 MUST INSTALL JUMPER FOR 8403-057 OR OTHER THERMOSTAT THAT DOES NOT HAVE OCCUPANCY OUTPUT.

4 INSTALL IF YOU REQUIRE VENTILATION ANYTIME BLOWER IS ON.

MIS-2775

FIGURE 13
LOW VOLTAGE WIRING

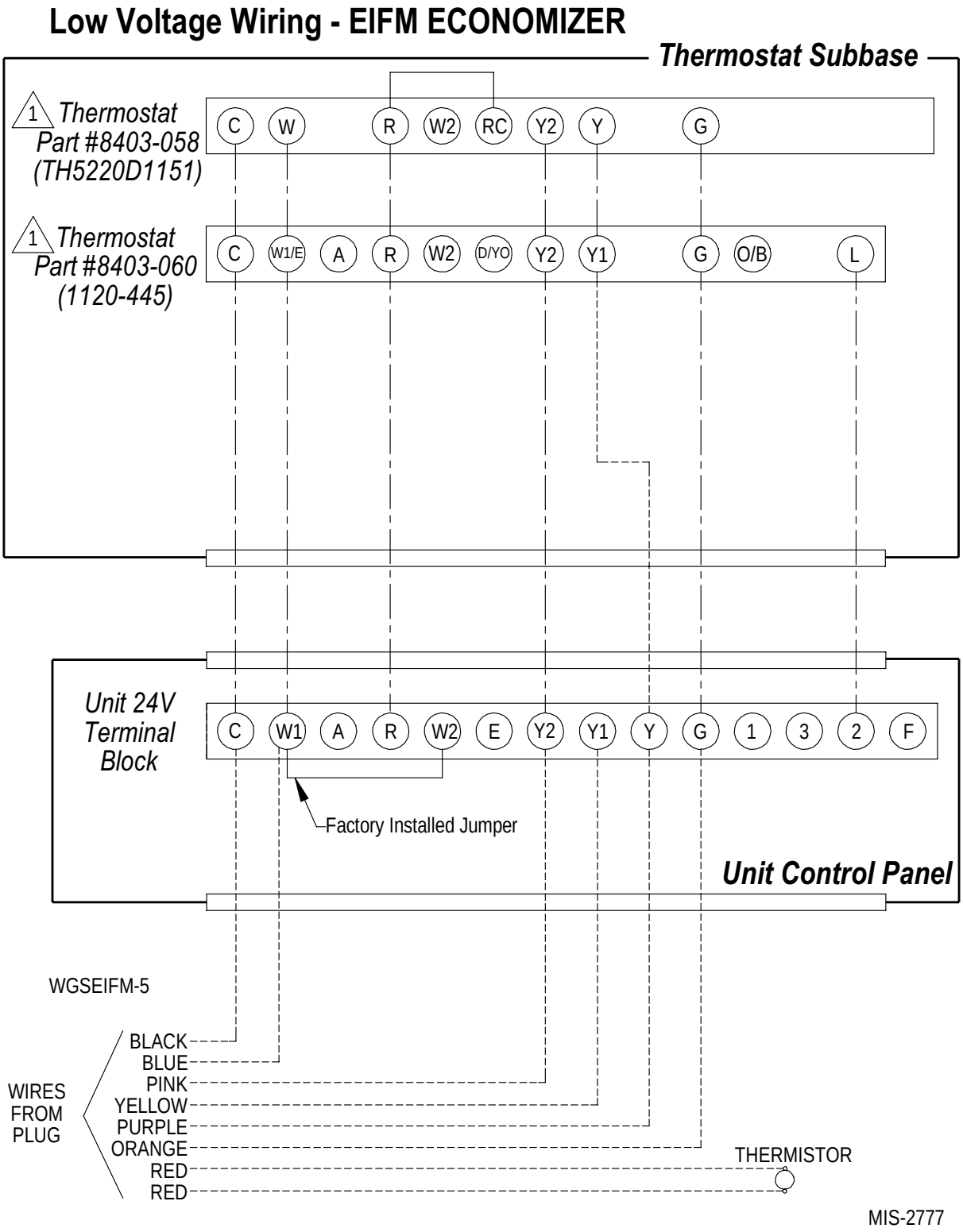

1 CONFIGURE THERMOSTAT FOR HEAT/COOL

FIGURE 14
GAS PIPE CONNECTION

UNIT	"A" LENGTH
W24G - W36G	8"
W42G - W60G	10"

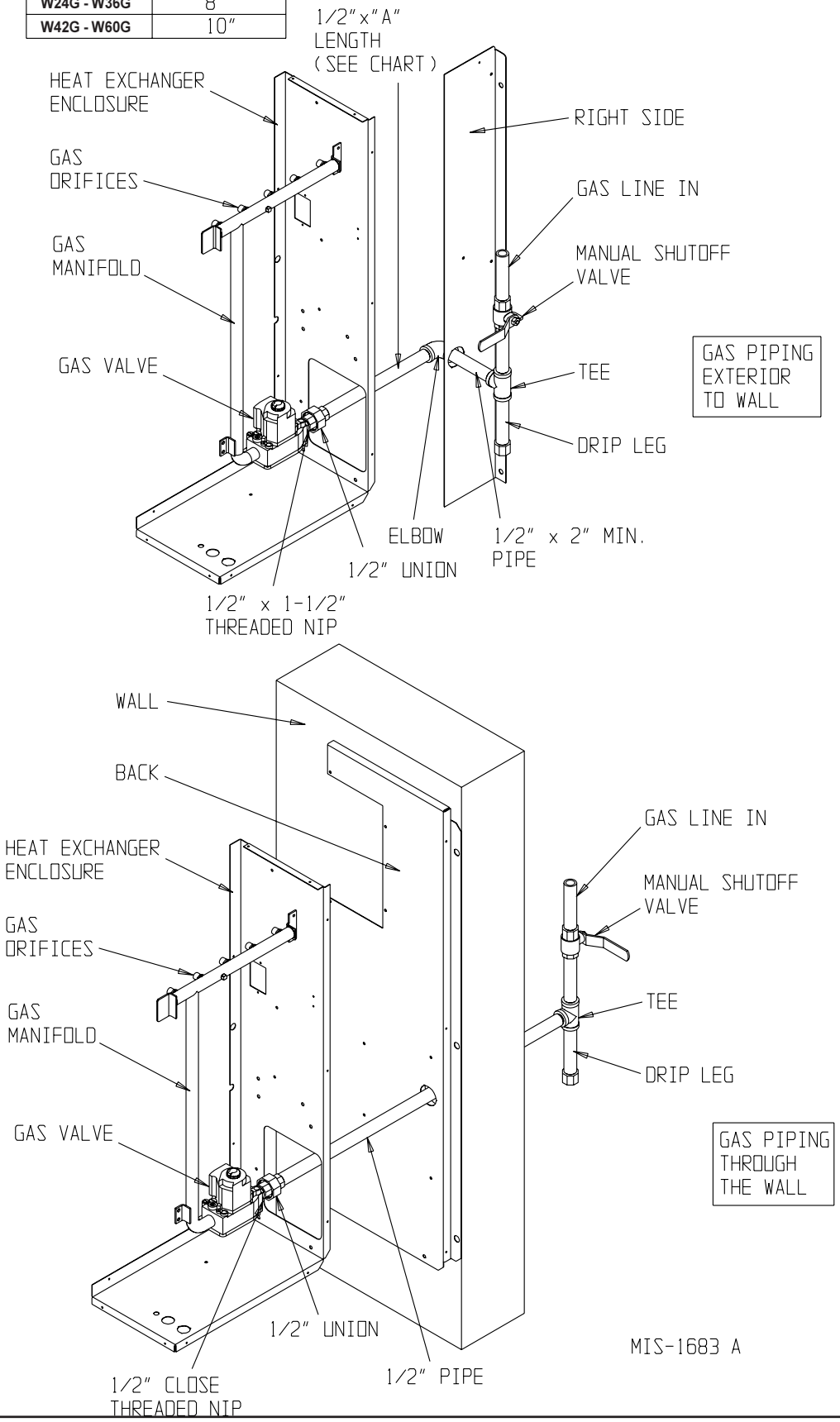

18. GAS SUPPLY AND PIPING

GENERAL RECOMMENDATIONS

1. Be sure the gas line complies with the local codes and ordinances, or in their absence with the National Fuel Gas Code, ANSI Z223.1, or Natural Gas Installation Code, CAN/CGA B149.1, or Propane Installation Code B149.2, latest edition.
2. A sediment trap or drip leg must be installed in the supply line to the furnace.
3. A ground joint union shall be installed in the gas line adjacent to and upstream from the gas valve and downstream from the manual shut off valve.
4. An 1/8" NPT plugged tapping accessible for test gauge connection shall be installed immediately upstream of the gas supply connection to the furnace for the purpose of determining the supply gas pressure. This can be omitted if local codes permit use of plugged tapping in gas valve inlet.
5. Install listed manual shut off valve in the supply gas line external to and immediately upstream of the furnace. See Figure 14.
6. Use steel or wrought iron pipe and fittings.
7. *DO NOT* thread pipe too far. Valve distortion or malfunction may result from excess pipe within the control. Use pipe joint compound resistant to the action of liquefied petroleum gases on male threads only. *DO NOT* use Teflon tape. See Table 5 and Figure 15.

TABLE 5
LENGTH OF STANDARD PIPE THREADS (INCHES)

Pipe Size	Effective Length of Thread	Overall Length of Thread
3/8	1/2	9/16
3/4	1/2 - - 9/16	13/16
1	9/16	1

FIGURE 15
PROPER PIPING PRACTICE

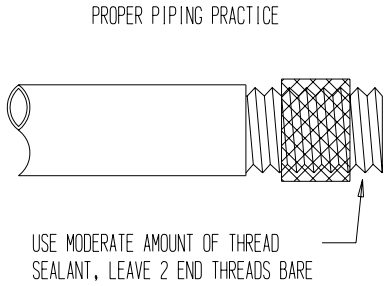

8. Refer to Table 6 for Gas Pipe Sizes for natural gas. If more than one appliance is supplied from a single line size, capacity must equal or exceed the combined input to all appliances, and the branch lines feeding the individual appliances properly sized for each input.

THIS PRODUCT MUST BE GAS PIPED BY A LICENSED PLUMBER OR GAS FITTER IN THE COMMONWEALTH OF MASSACHUSETTS.

TABLE 6
GAS PIPE SIZES - NATURAL GAS

Length of Pipe - Feet	Pipe Capacity - BTU per Hour Input Pipe Size			
	1/2"	3/4"	1"	1-1/4"
10	132,000	278,000	520,000	1,050,000
20	92,000	190,000	350,000	730,000
30	73,000	152,000	285,000	590,000
40	63,000	130,000	245,000	500,000
50	56,000	115,000	215,000	440,000
60	50,000	105,000	195,000	400,000
70	46,000	96,000	180,000	370,000
80	43,000	90,000	170,000	350,000
100	38,000	79,000	150,000	305,000

CHECKING THE GAS PIPING

Before turning gas under pressure into piping, all openings from which gas can escape should be closed. Immediately after turning on gas, the system should be checked for leaks. This can be done by watching the 1/2 cubic foot test dial and allowing 4 minutes to show any movement, and by soaping each pipe connection and watching for bubbles. If a leak is found, make the necessary repairs immediately and repeat the above test. The furnace must be isolated from the gas supply piping system by closing the manual shut off valve on the combination gas control valve during pressure testing of the gas supply piping system at pressures up to 1/2 PSIG. The furnace and its individual shut off valve must be disconnected from supply piping and supply piping capped during any pressure testing of supply piping system at test pressures in excess of 1/2 PSIG.

Defective pipes or fittings should be replaced and not repaired. Never use a flame or fire in any form to locate gas leaks; use a soap solution.

After the piping and meter have been checked completely, purge the system of air. *DO NOT* bleed air inside the furnace. ***Be sure to check and relight all the gas pilots on other appliances that may have been extinguished because of interrupted gas supply***.

PROPANE (LP) GAS CONVERSION

This unit may be converted in the field for use with Propane (LP) gas. Propane gas conversion kit number WGCK-1 is designed for conversions of units installed from 0 – 6,000 feet elevations. Propane gas conversion kit number WGCK-2 is designed for conversions of units installed from 6,001 – 10,000 feet elevations. These kits may be purchased from your local distributor.

⚠ WARNING

When converting from propane (LP) gas to natural gas, the gas orifice spuds and gas valve spring must be replaced and the gas valve regulator pressure must be adjusted correctly. Failure to do so can result in fire, injury or death. Refer to Tables 8 and 8A for proper orifice sizing.

Natural gas spring kit, Part number 5603-007, can be purchased through your local distributor.

19. MANIFOLD PRESSURE ADJUSTMENT

You will need a 0 to 15 inch water manometer with 0.1 inch resolution and a 1/8" NPT manual shut off valve to measure actual manifold pressure.

⚠ WARNING

Correct manifold pressure is necessary for proper ignition and burner operation. Failure to accurately adjust pressure could cause heat exchanger failure.

1. Turn off gas at equipment shut off valve in gas supply line just ahead of furnace.
2. Remove plug from outlet pressure tap in gas control or gas manifold.
3. Install 1/8" NPT manual shut off valve in hole vacated by plug. Make sure shut off valve is in off position.
4. Attach manometer to 1/8" NPT manual shut off valve just installed.
5. Slowly open equipment shut off valve in gas supply line just ahead of furnace. Start furnace following "Operating Instructions" on front door.
6. Slowly open 1/8" NPT manual shut off valve leading to manometer.
7. Read manifold pressure on manometer.
8. Adjust manifold pressure by turning gas control regulator adjusting screw clockwise to increase pressure or turning counterclockwise to decrease pressure. Manifold pressure must be within allowable range as follows:
   - Natural gas manifold pressure must be between 3.2 and 3.8 inches W.C. Rated pressure is 3.5 inches.
   - Propane gas (LP) manifold pressure must be between 9.7 and 10.3 inches W.C. Rated pressure is 10 inches.

NOTE: For natural gas, if gas flow rate can't be properly set within these pressure ranges then you must change main burner orifices to obtain proper gas flow rate.

9. Shut off furnace. Turn off gas at equipment shut off valve in gas supply line just ahead of furnace. Install outlet pressure tap plug in gas control. Turn on gas.
10. Check regulator adjustment cover screw and gas control plug for gas leaks. Use a commercial soap solution made for leak detection.

20. CHECKING GAS INPUT RATE

It is the installer's responsibility to see that the BTU input rate of the furnace is properly adjusted. Under-firing could cause inadequate heat, excessive condensation or ignition problems. Overfiring could cause sooting, flame impingement or overheating of heat exchanger.

⚠ WARNING

Failure to adjust furnace to the proper firing rate could cause heat exchanger failure.

Depending on your local gas heating value and elevation, you may need to adjust manifold pressure or change orifices to get proper gas input rate. Check with your local gas supplier to determine heating value (BTU/cu. ft.) of natural gas in your area.

NOTE: If furnace is being installed at an altitude of more than 6,000 feet above sea level, you must derate the furnace. See Section 21 "Standard Orifice Sizing and High Altitude Derate".

NATURAL GAS INPUT RATE

Natural gas heating value (BTU/cu. ft.) can vary significantly. Before starting natural gas input check, obtain gas heating value at your location from local supplier. You will need a stopwatch to measure actual gas input.

1. Gas supply pressure must be between 5 and 7 inches W.C. for natural gas.
2. Turn off all other gas appliances. You may leave pilots on.
3. Start furnace following "Operating Instructions" on front door.
4. Let furnace warm up for 6 minutes.
5. Locate gas meter. Determine which dial has the least cubic feet of gas and how many cubic feet per revolution it represents. This is usually one-half, one or two cubic feet per revolution.
6. With stopwatch, measure time it takes to consume two cubic feet of gas.
   - If dial is one-half cubic foot per revolution, measure time for four revolutions.
   - If dial is one cubic foot per revolution, measure time for two revolutions.
   - If dial is two cubic feet per revolution, measure time for one revolution.
7. Divide this time by two. This gives average time for one cubic foot of gas to flow through meter. Example: If it took 58 seconds for two cubic feet to flow, it would take 29 seconds for one cubic foot to flow.
8. Calculate gas input using this formula:

$$\text{Gas input} = \frac{\text{Gas Heating Value (BTU/cu. ft.)} \times 3{,}600 \text{ sec/hr}}{\text{Time (Seconds for one cubic foot of gas)}} = \text{BTU/hour}$$

   Example:

   Assume it took 29 seconds for one cubic foot of gas to flow and heating value of 1,000 BTU/cu. ft.

$$\text{Gas input} = \frac{1{,}000 \times 3{,}600}{29} = 124{,}138 \text{ BTU}$$

   If you left no other pilots on, this is the furnace gas input.

9. If you left water heater, dryer or range pilots on, allow for them in calculating correct furnace gas input. A quick way is to allow 1,000 BTU per hour for a water heater, 500 BTU per hour for dryer and 500 BTU per hour for each range burner pilot.

   Example:

   If you left gas water heater, dryer, two range burner pilots and one oven pilot on, allow:

Water heater pilot	1,000 BTU per hour
Dryer pilot	500 BTU per hour
2 range burner pilots	1,000 BTU per hour
1 range oven pilot	500 BTU per hour
	3,000 BTU per hour

   Subtracting 3,000 BTU per hour from 124,138 BTU per hour measured above equals 121,138 BTU per hour. This would be the correct furnace gas input after allowing for pilots left on.

10. Manifold pressure may be adjusted within the range of 3.2 inches W.C. to 3.8 inches W.C. to get rated input ± 2 percent. See Section 19, "Manifold Pressure Adjustment". If you cannot get rated input with manifold pressure within the allowable range, you must change orifices.

PROPANE (LP) GAS INPUT RATE

⚠ WARNING

Propane (LP) gas installations do not have gas meters to double check input rate. Measure manifold pressure adjustment with an accurate manometer. Failure to accurately adjust pressure could cause heat exchanger failure, asphyxiation, fire or explosion, resulting in damage, injury or death.

1. Make sure you have proper main burner orifices.
2. Gas supply pressure must be between 11 and 13 inches W.C. for propane (LP) gas.
3. Start furnace following "Operating Instructions" on front door.
4. Let furnace warm up for 6 minutes.
5. Adjust manifold pressure to 10.0 W.C. ± 0.3 inches W.C. See Section 19, "Manifold Pressure Adjustment".

⚠ WARNING

Do not set Propane (LP) manifold pressure at 11.0 inches W.C. It could cause heat exchanger failure.

21. STANDARD ORIFICE SIZING AND HIGH ALTITUDE DERATE

This furnace is shipped with fixed gas orifices for use with Natural Gas and sized for 1000 BTU/cubic foot gas. Make sure actual gas input does not exceed rating plate input. You may need to change orifices to get correct gas input. Whether you do or not depends on input, and your gas heat value at standard conditions and elevation. Consult your local gas supplier for gas heat value and any special derating requirements. See Section 20 for more information.

At higher altitudes, the density of the air is reduced. Therefore, for proper combustion, the quantity of gas burned in the furnace must also be reduced. This is called derating. This unit must be derated when installed at altitudes greater than 6,000 feet above sea level. A high altitude pressure switch must also be installed for operation above 6,000 feet. High altitude pressure switch kit number 8620-189 is designed for this application.

It is the installer's responsibility to see that the furnace input rate is adjusted properly. Derating must be achieved by reducing the size of the main burner orifices. Derating the furnace by adjusting the manifold pressure lower than the range specified in the Section 19, "Manifold Pressure Adjustment" is considered to be an improper procedure.

Above 6,000 feet elevation orifice changes are required, and capacity reductions are a function of altitude impact and orifice change. Pressure switch change is required above 6,000 feet elevation. For Natural Gas see the Altitude Table 7 below and the Orifice Tables 8 and 8A on following pages.

TABLE 7
NATURAL GAS DERATE CAPACITIES
FOR ALL MODELS

WG Rated Input	Sea Level	1,000	2,000	3,000	4,000	5,000	6,000	7,000	8,000	9,000	10,000
41,000	40,500	39,204	37,908	36,612	35,640	34,992	34,182	33,696	33,048	32,643	32,076
45,000	45,000	43,560	42,120	40,680	39,600	38,880	37,980	37,440	36,720	36,270	35,640
61,000	60,750	58,806	56,862	54,918	53,460	52,488	51,273	50,544	49,572	48,965	48,114
68,000	67,500	65,340	63,180	61,020	59,400	58,320	56,970	56,160	55,080	54,405	53,460
75,000	75,000	72,600	70,200	67,800	66,000	64,800	63,300	62,400	61,200	60,450	59,400
81,000	81,000	78,408	75,816	73,224	71,280	69,984	68,364	67,392	66,096	65,286	64,152
90,000	90,000	87,120	84,240	81,360	79,200	77,760	75,960	74,880	73,440	72,540	71,280
100,000	100,000	96,800	93,600	90,400	88,000	86,400	84,400	83,200	81,600	80,600	79,200
113,000	112,500	108,900	105,300	101,700	99,000	97,200	94,950	93,600	91,800	90,675	89,100
125,000	125,000	121,000	117,000	113,000	110,000	108,000	105,500	104,000	102,000	100,750	99,000

TABLE 8
NATURAL GAS ORIFICE TABLES
FOR MODELS *W24G, W30G AND W36G*

Factory Standard Input	Gas Heat* Value BTU/Cu. Ft.	Up to 6,000 Feet No Changes Except for BTU Content	6,001 to 8,000 Feet Requires Pressure Switch Change and Orifice Change Based on BTU Content	8,001 to 10,000 Feet Requires Pressure Switch Change and Orifice Change Based on BTU Content
22500 BTU Per Burner	700-749	2.75	2.70	2.60
	750-799	2.70	2.60	2.50
	800-849	2.60	2.50	2.45
	850-899	2.50	2.45	2.35
	900-949	2.45	2.35	**(2.30)**
	950-999	2.35	**(2.30)**	2.25
	1000-1049**	**(2.30)**	2.25	**[2.20]**
	1050-1100	2.25	**[2.20]**	2.15
	Pressure Switch	Standard (.55)	**Order 8620-189 High Altitude Pressure Switch Kit (.42)**	

(2.30) is the standard factory installed orifice size **[2.20] orifices are shipped with the unit for field installed optional 10% derate**

Optional 10% Field Converted Derate	Gas Heat* Value BTU/Cu. Ft.	Up to 6,000 Feet No Changes Except for BTU Content	6,001 to 8,000 Feet Requires Pressure Switch Change and Orifice Change Based on BTU Content	8,001 to 10,000 Feet Requires Pressure Switch Change and Orifice Change Based on BTU Content
20250 BTU Per Burner	700-749	2.60	2.50	2.45
	750-799	2.50	2.45	2.40
	800-849	2.45	2.40	**(2.30)**
	850-899	2.40	**(2.30)**	2.25
	900-949	**(2.30)**	2.25	**[2.20]**
	950-999	2.25	**[2.20]**	2.15
	1000-1049**	**[2.20]**	2.15	2.10
	1050-1100	2.15	2.15	2.10
	Pressure Switch	Standard (.55)	**Order 8620-189 High Altitude Pressure Switch Kit (.42)**	

[2.20] orifices are shipped with the unit for field installed optional 10% input rate. **(2.30) is the factory installed orifice size for full rated input**

* At standard conditions: 30.00 inches Mercury, 60F, saturated, .60 specific gravity.

** All Natural Gas factory orifice sizing and standard input ratings based on nominal 1025 BTU/cu ft gas and sea level conditions

All other orifice sizes shown are available as individual items. See Orifice charts below for part numbers and number required.

Bard Part No.	Orifice Size (mm)	Orifice Diameter
9010-092	2.10	0.0826
9010-088	2.15	0.0846
9010-087	2.20	0.0866
9010-086	2.25	0.0885
9010-082	2.30	0.0905
9010-085	2.35	0.0925
9010-079	2.40	0.0945
9010-084	2.45	0.0964
9010-093	2.50	0.0984
9010-094	2.60	0.1024
9010-095	2.70	0.1063
9010-096	2.75	0.1082
9010-097	2.80	0.1102
9010-098	2.90	0.1142

No. of Orifices Required Based on Unit Input Rating
41,000 (2)
45,000 (2)
61,000 (3)
68,000 (3)
75,000 (3)
81,000 (4)
90,000 (4)
100,000 (4)
113,000 (5)
125,000 (5)

TABLE 8A
NATURAL GAS ORIFICE TABLES
FOR MODELS *W42G, W48G AND W60G*

Factory Standard Input	Gas Heat* Value BTU/Cu. Ft.	Up to 6,000 Feet No Changes Except for BTU Content	6,001 to 8,000 Feet Requires Pressure Switch Change and Orifice Change Based on BTU Content	8,001 to 10,000 Feet Requires Pressure Switch Change and Orifice Change Based on BTU Content
25000 BTU Per Burner	700-749	2.90	2.80	2.70
	750-799	2.80	2.70	2.60
	800-849	2.70	2.60	2.50
	850-899	2.60	2.50	2.45
	900-949	2.50	2.45	**(2.40)**
	950-999	2.45	**(2.40)**	2.35
	1000-1049**	**(2.40)**	2.35	**[2.30]**
	1050-1100	**[2.30]**	2.25	2.20
	Pressure Switch	Standard (.55)	**Order 8620-189 High Altitude Pressure Switch Kit (.42)**	

(2.40) is the standard factory installed orifice size **[2.30] orifices are shipped with the unit for field installed optional 10% derate**

Optional 10% Field Converted Derate	Gas Heat* Value BTU/Cu. Ft.	Up to 6,000 Feet No Changes Except for BTU Content	6,001 to 8,000 Feet Requires Pressure Switch Change and Orifice Change Based on BTU Content	8,001 to 10,000 Feet Requires Pressure Switch Change and Orifice Change Based on BTU Content
22500 BTU Per Burner	700-749	2.75	2.70	2.60
	750-799	2.70	2.60	2.50
	800-849	2.60	2.50	
	850-899	2.50	2.45	**(2.40)**
	900-949	**(2.40)**	2.35	**[2.30]**
	950-999	2.35	**[2.30]**	2.25
	1000-1049**	**[2.30]**	2.25	2.20
	1050-1100	2.25	2.25	2.20
	Pressure Switch	Standard (.55)	**Order 8620-189 High Altitude Pressure Switch Kit (.42)**	

[2.30] orifices are shipped with the unit for field installed optional 10% input rate. **(2.40) is the factory installed orifice size for full rated input**

* At standard conditions: 30.00 inches Mercury, 60F, saturated, .60 specific gravity.
** All Natural Gas factory orifice sizing and standard input ratings based on nominal 1025 BTU/cu ft gas and sea level conditions

All other orifice sizes shown are available as individual items. See Orifice charts on Page 28 for part numbers and number required.

22. CONVERSION OF GAS INPUT BTUH FROM HIGH TO LOW RATING

All the derated WG series units are produced with maximum BTUH input orifices installed. To field convert input, a change to main burner orifices is required.

NOTE: No change to air orifices is necessary. A set of low input orifices is shipped with every unit. They will be found packaged in a bag behind the burner door. Refer to the unit rating plate to confirm the proper orifice size. Proper installation of the orifices is detailed as follows:

A. Shut off electrical supply to the unit.

B. Shut off gas supply to the unit.

C. Remove burner access panel.

D. Disconnect gas valve from gas supply piping.

E. Disconnect the two wires from the gas valve.

F. Remove the manifold assembly so that orifices are now accessible and remove orifices.

G. Apply a modest amount of pipe compound to the new orifices and screw them into the manifold.

H. To assemble burner reverse steps A through G.

⚠ WARNING

Failure to follow these instructions could create a hazard resulting in property damage, bodily injury, or death.

23. MEASURING AIR TEMPERATURE RISE

Air temperature rise (supply air temperature minus return air temperature) must be within allowable air temperature rise range specified on furnace rating plate.

You will need 2 thermometers with 1 degree resolution capable of reading up to 200 degrees F. Check thermometers to make sure they agree, or compensate accordingly.

Follow this procedure:

1. Open supply air registers and return air grilles. Make sure the registers and grilles are free of obstruction from rugs, carpets, drapes or furniture.
2. Set balancing dampers in supply duct system.
3. Check duct work for obstructions or leaks.
4. Make sure filters are clean and in place.
5. Place one thermometer in supply air plenum approximately 2 feet from furnace. Locate thermometer tip in center of plenum to insure proper temperature measurement.
6. Place second thermometer in return air duct approximately 2 feet from furnace. Locate thermometer tip in center of duct to insure proper temperature measurement.
7. Set room thermostat on highest temperature setting. Operate furnace 10 minutes. Record supply air and return air temperatures.
8. Calculate air temperature rise by subtracting return air temperature from supply air temperature.
   - If air temperature rise is above the temperature rise range on rating plate, furnace is overfired or has insufficient airflow. Check gas input following the instructions in Section, "Checking Gas Input Rate". If air temperature rise is still above temperature rise range specified, more heating airflow is needed. Check duct work and grilles to make sure all are properly sized.
   - If air temperature rise is below the temperature rise range on rating plate, furnace is underfired or has too much airflow. Check gas input following the instructions in Section, "Checking Gas Input Rate". If air temperature rise is still below temperature rise range specified, less heating airflow is needed. Adjust dampers or grilles as needed.
   - After making adjustments, you must check air temperature rise to verify that resulting air temperature rise is within allowable range. If air temperature rise is still outside the temperature rise range specified on rating plate, check duct system design with a qualified heating engineer. It may be necessary to re-size the duct work. Recheck air temperature rise after revising duct systems.
9. Set room thermostat to desired setting.
10. Remove thermometers and seal duct work holes.

NOTE: Failure to seal holes could result in reduced system performance.

FIGURE 16
ACCESS INTERNAL FILTER
THROUGH UPPER SERVICE DOOR

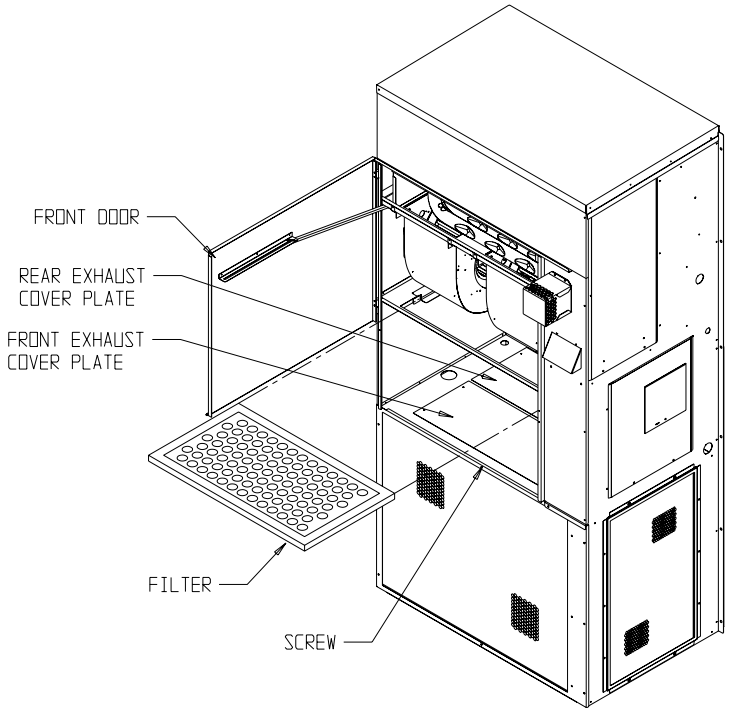

MIS-2127

24. FILTERS

A 2" thick throwaway filter is supplied with each unit. This filter is installed by opening the main service door. (See Figure 16.)

Replacement filters are available through your dealer.

25. COMPRESSOR CONTROL MODULE

The compressor control is an anti-short cycle/lockout timer with high and low pressure switch monitoring and alarm output.

ADJUSTABLE DELAY-ON-MAKE AND BREAK TIMER

On a call for compressor operation the *delay-on-make* period begins which will be 10% of the *delay-on-break* setting. When the delay-on-make is complete and the high pressure switch (and low pressure switch if employed) is closed, the compressor contactor is energized. Upon shutdown, the delay-on-break timer starts and prevents restart until the delay-on-break and delay-on-make periods have expired.

HIGH PRESSURE SWITCH AND LOCKOUT SEQUENCE (Standard Feature)

If the high pressure switch opens, the compressor contactor will de-energize immediately. The lockout timer will go into a *soft lockout* and stay in soft lockout until the high pressure switch closes **and** the delay-on-make time has expired. If the high pressure switch opens again in this same operating cycle the unit will go into *manual lockout* condition and the alarm circuit will energize. Recycling the wall thermostat resets the manual lockout.

LOW PRESSURE SWITCH, BYPASS, AND LOCKOUT SEQUENCE

NOTE: The low pressure switch is an optional control and the bypass and lockout sequence are part of the standard compressor control module.

If the low pressure switch opens for more that 120 seconds, the compressor contactor will de-energize and go into a soft lockout. Regardless the state of the low pressure switch, the contactor will reenergize after the delay-on-make time delay has expired. If the low pressure switch remains open or opens again for longer than 120 seconds the unit will go into manual lockout condition and the alarm circuit will energize. Recycling the wall thermostat resets the manual lockout.

ALARM OUTPUT

Alarm terminal is output connection for applications where alarm signal is desired. This terminal is powered whenever compressor is locked out due to HPC or LPC sequences as described.

NOTE: Both high and low pressure switch controls are inherently automatic reset devices. The high pressure switch and low pressure switch cut out and cut in settings are fixed by specific air conditioner or heat pump unit model. The lockout features, both soft and manual, are a function of the Compressor Control Module.

ADJUSTMENTS

ADJUSTABLE DELAY-ON-MAKE AND DELAY-ON-BREAK TIMER

The potentiometer is used to select Delay-on-Break time from 30 seconds to 5 minutes. Delay-on-Make (DOM) timing on power-up and after power interruptions is equal to 2 minutes plus 10% of Delay-on-Break (DOB) setting:

0.5 minute	(30 seconds)	DOB	=	123 second DOM
1.0 minute	(60 seconds)	DOB	=	126 second DOM
2.0 minute	(120 seconds)	DOB	=	132 second DOM
3.0 minute	(160 seconds)	DOB	=	138 second DOM
4.0 minute	(240 seconds)	DOB	=	144 second DOM
5.0 minute	(300 seconds)	DOB	=	150 second DOM

PHASE MONITOR

All units with three phase scroll compressors are equipped with a three phase line monitor to prevent compressor damage due to phase reversal.

The phase monitor in this unit is equipped with two LEDs. If the “Y” signal is present at the phase monitor and phases are correct, the green LED will light.

If phases are reversed, the red fault LED will be lit and compressor operation is inhibited.

If a fault condition occurs, reverse two of the supply leads to the unit. Do not reverse any of the unit factory wires as damage may occur.

26. LIGHTING AND SHUTDOWN INSTRUCTIONS

FIGURE 17
INSTRUCTION LABEL

FOR YOUR SAFETY READ BEFORE OPERATING

WARNING: If you do not follow these instructions exactly, a fire or explosion may result causing property damage, personal injury or loss of life.

A. This appliance does not have a pilot. It is equipped with an ignition device which automatically lights the burner. Do NOT try to light the burner by hand.

B. BEFORE OPERATING smell all around the appliance area for gas. Be sure to smell next to the floor because some gas is heavier than air and will settle on the floor.

WHAT TO DO IF YOU SMELL GAS

*Do not try to light any appliance.

*Do not touch any electric switch; do not use any phone in your building.

*Immediately call your supplier from a neighbor's phone. Follow the gas supplier's instructions.

*If you cannot reach your gas supplier; call the fire department.

C. Use only your hand to push in or move the gas control lever. Never use tools. If the lever will not push in or turn by hand, don't try to repair it, call a qualified service technician. Force or attempted repair may result in a fire or explosion.

D. Do not use this appliance if any part has been under water. Immediately call a qualified service technician to inspect the appliance and to replace any part of the control system and any gas control which has been under water.

OPERATING INSTRUCTIONS

1. STOP! Read the safety information above on this label.
2. Set the thermostat to lowest setting.
3. Turn off all electric power to the appliance.
4. This appliance is equipped with an ignition device which automatically lights the burner. Do NOT try to light the burner by hand.

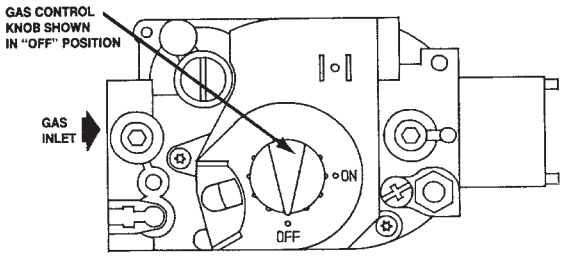

5. Remove control access panel.
6. Push in gas control knob slightly and turn clockwise to "OFF".

   NOTE: Knob cannot be turned to "OFF unless knob is pushed in slightly. Do not force.
7. Wait five (5) minutes to clear out any gas. Then smell for gas, including near the floor. If you smell gas, STOP! Follow "B" in the safety information above on this label. If you don't smell gas, go to the next step.
8. Turn gas control knob counterclockwise to "ON".
9. Replace control access panel.
10. Turn on all electric power to the appliance.
11. Set thermostat to desired setting.
12. If the appliance will not operate, follow the instructions "To Turn Off Gas To Appliance" and call your service technician or gas supplier.

TO TURN OFF GAS TO APPLIANCE

1. Set the thermostat to lowest setting.
2. Turn off all electric power to the appliance if service is to be performed.
3. Remove control access panel.
4. Push in gas control lever slightly and move to "OFF". Do not force.
5. Replace control access panel.

7961-509

27. SERVICE AGENCY PROCEDURES

⚠ CAUTION

Label all wires prior to disconnection when servicing controls. Wiring errors can cause improper and dangerous operation. Verify proper operation after servicing.

⚠ WARNING

Follow these procedures before inspecting furnace.

- Turn room thermostat to its lowest or off setting.
- Turn off manual gas shut off valve.
- Wait at least 5 minutes for furnace to cool if it was recently operating.
- Turn off furnace electrical power; failure to do so could result in injury or death.

MAIN BURNER

Observe the main burners in operation. The flame should be mostly "blue" with possibly a little orange (not yellow) at the tips of the flame. The flames should be in the center of the heat exchanger tubes and not impinging on the heat exchanger surfaces themselves.

Observe the fire until the blower starts (there is a normal delay period until the heat exchanger warms up). There should be no change in the size or shape of the flame. If there is any wavering or blowing of the flame on blower start-up, it is an indication of a possible leak in the heat exchanger.

FIGURE 18
TOP VIEW OF GAS CONTROL

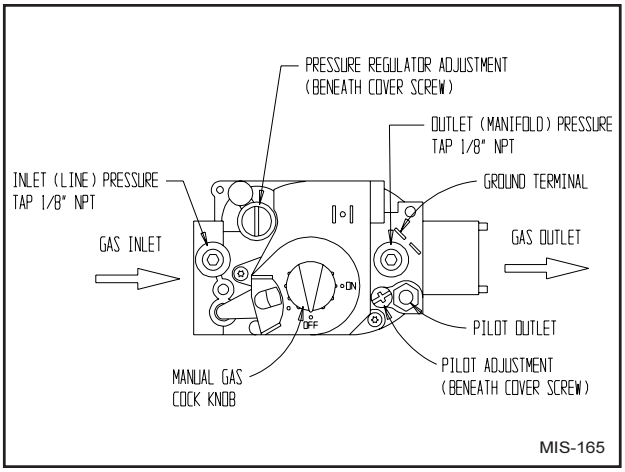

BURNERS / HEAT EXCHANGER / FLUE GAS PASSAGE WAYS

The burners, heat exchanger and interior flue gas passages may be inspected using a light on small mirror or an extension handle. Remove the screws securing the inducer and collector box. Now inspect the upper tubes of the heat exchanger.

Check the exterior of the heat exchanger and the interior flue gas passages for any evidence of deterioration due to corrosion, cracking or other causes. If signs of sooting exist, remove the burners and clean the heat exchanger, as required.

28. MAINTAINING UNIT IN GOOD WORKING ORDER

The unit should be inspected annually by a qualified service agency.

⚠ WARNING

Use replacement parts listed in the Replacement Parts list only. The use of incorrect parts could cause improper unit operation, resulting in damage, injury or death.

⚠ WARNING

Disconnect electrical power before servicing unit. Failure to do so could result in electrical shock or death.

ANNUAL MAINTENANCE

Routine inspection and maintenance procedures are the responsibility of the user and are outlined below.

1. Before inspecting unit:
   a. Turn room thermostat to lowest or off setting.
   b. Turn off equipment gas shut off valve.
   c. Wait for unit to cool if it was recently operating.
   d. Turn off electrical power to unit.
2. Inspect the following:
   a. Vent terminal and combustion air intake terminal. Make sure both are free from obstructions.
   b. Vertical Vent Applications – Inspect venting system. Make sure system has no holes, is physically sound and free from obstructions.
   c. Make sure the supply and return air flange sleeves or duct work are securely fastened to unit and physically sound.
   d. Supply and return grilles must be open and free from obstructions.
   e. Inspect to make sure the unit is securely fastened to the wall. Seal any possible leaks between unit and wall with appropriate exterior sealing material.
   f. Inspect burners, heat exchanger, induced draft blower, and induced draft blower collector box. There must be no obvious signs of deterioration.
   g. Inspect all electrical connections and wiring.
   h. Check all gas piping for leaks with soap solution used to detect leaks.
   i. Inspect, clean, and repair as needed the entire blower assembly, air filters, draft inducer, cooling coils, and vent options (if installed).

ROUTINE MAINTENANCE

1. Air Filters – Check the condition at least monthly when the unit is in use, and replace as necessary.
2. Lubrication Requirements – The indoor circulating air blower motor and outdoor circulating air fan motor are permanently lubricated and requires no re-oiling. The combustion air blower motor requires no re-oiling.

⚠ WARNING

Turn off electrical power supply to prevent injury from moving parts or electric shock.

ROUTINE INSPECTION

1. Inspect the physical support of the unit annually to make sure it is securely fastened to the building. Also look for any obvious signs of deterioration.
2. Inspect the main burners at the beginning of each heating season and clean as necessary.
3. Inspect the vent terminal and combustion air intake hood for any obvious deterioration, to make sure it is free and clear of any obstructions.

29. REPLACEMENT PARTS

⚠ WARNING

Use replacement parts listed in Replacement Parts list. Failure to do so could cause improper furnace operation, resulting in property damage, personal injury, or death.

Replacement parts for the gas/electric units are available through local distributors.

A replacement parts list manual is supplied with each unit. When ordering parts or making inquires pertaining to any of the units covered by these instructions, it is very important to always supply the ***complete*** model number and serial number of the unit. This is necessary to assure that the correct parts (or an approved alternate part) are issued to the service agency.

30. SEQUENCE OF OPERATION – HEATING

On a call for heat from the thermostat, the induced draft blower is energized. Once sufficient draft is established, the pressure switch contacts close and the ignition system is energized. The direct spark ignitor will be energized allowing gas to flow. At the same time the main valve is energized, a 30-second blower delay timer is activated.

After this delay, the heating speed blower relay energizes. The blower will begin operating and remain in operation until the set delay time after the call for heat has been satisfied. (See Tables 10-15 for selectable blower off time delays.) This timing sequence guarantees blower on, blower off operation.

This unit is equipped with a flame roll-out switch, which is wired in series with the control circuit. This is a manual reset switch and is used for the purpose of preventing possible fire hazard in the event of a system malfunction. If this switch has opened the control circuit, there could be a possible system malfunction. Some of the conditions that might cause a roll-out to occur are blockage or sooting of primary heat exchanger, overfiring of furnace due to improper main burner orifices or incorrect manifold pressure, insufficient combustion air, or installation deficiencies with respect to return air duct design or sizing.

Once the problem has been resolved, reset the switch by pressing down on the reset button on top of the switch. See Figure 19 for additional information.

31. SEQUENCE OF OPERATION – COOLING

On a call for cooling from the room thermostat, the high speed blower relay will be energized as well as the compressor contactor. Following termination of the cooling cycle, the blower motor will continue to run for one minute.

See Figure 19 for additional information.

The unit may be equipped with a low ambient control for lower outdoor temperature operation in the cooling mode. If equipped with this optional control the condenser fan will not operate immediately upon compressor start-up, and will cycle on and off until the condensing pressure remains above 180 PSIG. LAC energizes the fan motor at 280 PSIG, de-energizes at 180 PSIG.

FIGURE 19
SEQUENCE OF OPERATION
ELECTRONIC BLOWER CONTROL

ACTION	SYSTEM RESPONSE
Thermostat calls for heat. (W terminal is energized.)	• Combustion air blower is energized. • Air proving switch makes. Air flow is established. • Ignition system is energized. • Gas valve opens and main burner lights. • Heat fan on delay timing begins. When timing is complete, the circulating fan is energized at heat speed.
Thermostat ends call for heat.	• Ignition system is de-energized and gas valve closes. • Combustion air blower is de-energized after postpurge timing. • Heat fan off delay timing begins. When timing is complete, the circulating fan is de-energized.
Thermostat begins call for cool. (G and Y terminals re-energized.)	• Cooling contactor is energized. • Circulating fan is energized on cool speed after cool fan on delay timing.
Thermostat ends call for fan. (G terminal is de-energized.)	• Circulating fan is de-energized
Limit (flame rollout) opens.	• Thermostat and ignition system are de-energized and gas valve closes. • Combustion air blower and circulating fan heat speed are energized.
Limit (auto reset) or flame rollout (manual reset) circuit closed.	• Combustion air blower rremains energized for postpurge timing. • The circulation fan remains energized for the selected delay off timing. • Normal operation resumes.

FIGURE 20
FURNACE CONTROL BOARD AND BLOWER CONTROL

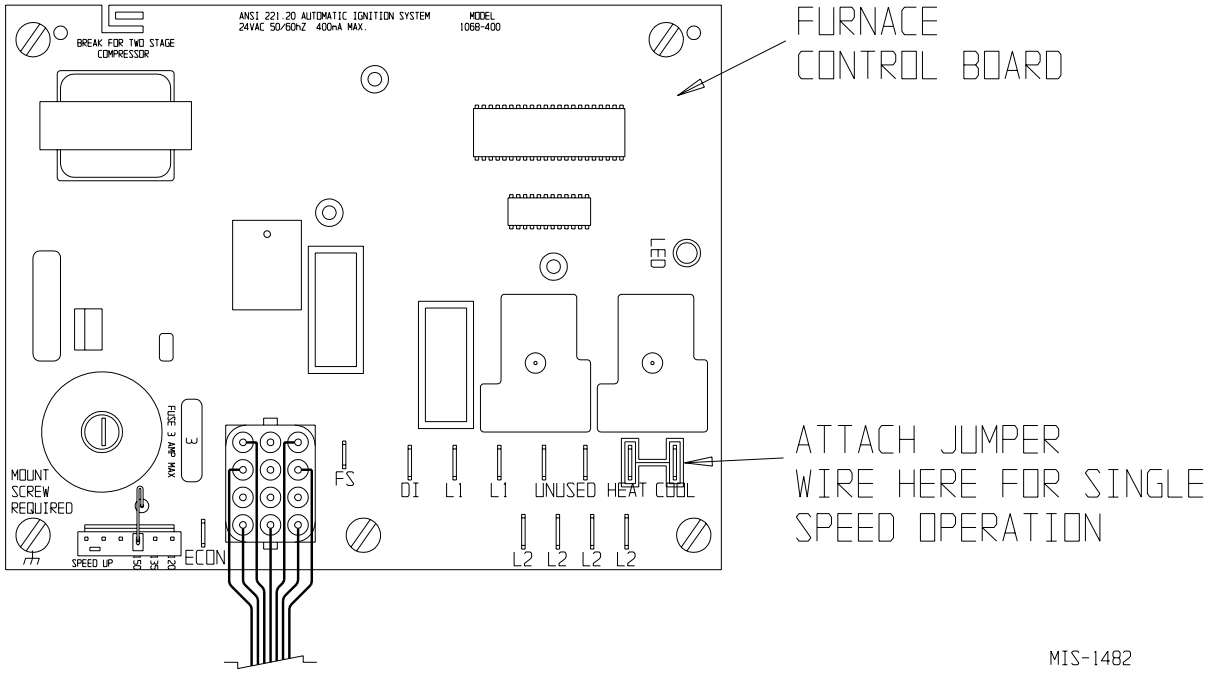

32. INDOOR BLOWER OPERATION

All models have multiple speed direct drive blower motors. If supply and return ducts are connected to the unit, the ducts must be of adequate size. Refer to the appropriate blower tables. See Tables 10, 11, 12, 13, 14 and 15 for maximum static pressures acceptable. Note the minimum CFM for cooling operation.

If voltage and duct design permit, (see blower tables) single speed operation can be achieved as follows:

BLOWER MOTOR SPEED CHANGE

1. Disconnect power supply to unit.
2. Place desired blower motor speed lead wire to "COOL" terminal of integrated furnace control board.
3. Place desired blower motor speed lead wire to "HEAT" terminal of integrated furnace control board.
4. Place unused blower motor speed lead wire to "UNUSED" terminal of integrated furnace control board.
5. Energize the system in cooling and heating modes to check for proper blower operation.

If it is desirable to have both HEAT/COOL blower motor speed at the same speed, install a jumper wire between "HEAT" and "COOL" terminals of the integrated furnace control board, and place both unused motor speed lead wires on the two "UNUSED" terminals on the integrated furnace control board. (See Figure 20.)

TABLE 9
230 VOLT MOTOR SPEED TAPS

Speeds	3-Speed Blower Motor
Low	Red
Medium	Blue
High	Black

460 VOLT MOTOR SPEED TAPS

Speeds	3-Speed Blower Motor
Low	Red
Medium	Blue
High	Black
Isolation *	Orange
Isolation *	Purple

**** NOTE:** On 460 Volt motors, there are two motor isolation leads. The orange must connect with the black high speed blower motor lead wire for medium and low speed blower operation. The purple wire must connect with the blue medium speed blower motor lead wire for low speed blower operation. This is all automatically accomplished with blower relays HSBR, MSBR and LSBR, and speed changes are all made by changes at the integrated furnace control board.*

TABLE 10
W24G INDOOR BLOWER PERFORMANCE @ 230 AND 460 VOLTS

Recommended W24G cooling airflow range at rated 800 CFM @ 0.15 ESP (WC) is 680 - 920 CFM
Factory set on Low Speed for cooling and High for heating.

ESP Inches H_2O	COOLING MODE			MANUAL FAN and HEATING MODE					
	Wet Coil			90,000 BTU Input			81,000 BTU Input		
	High	Medium	Low	High	Medium	Low	High	Medium	Low
0.0	- - -	- - -	890	1350	1120	- - -	- - -	1120	940
0.1	- - -	- - -	820	1260	1060	- - -	- - -	1060	870
0.2	- - -	950	770	1200	1010	- - -	1200	1010	- - -
0.3	- - -	880	700	1120	- - -	- - -	1120	940	- - -
0.4	- - -	790	- - -	1030	- - -	- - -	1030	860	- - -
0.5	910	710	- - -	- - -	- - -	- - -	950	- - -	- - -
0.6	800	- - -	- - -	- - -	- - -	- - -	840	- - -	- - -

ESP Inches H_2O	COOLING MODE			MANUAL FAN and HEATING MODE					
	Wet Coil			68,000 BTU Input			61,000 BTU Input		
	High	Medium	Low	High	Medium	Low	High	Medium	Low
0.0	- - -	- - -	890	1350	1120	940	- - -	1120	940
0.1	- - -	- - -	820	1260	1060	870	- - -	1060	870
0.2	- - -	950	770	1200	1010	- - -	- - -	1010	810
0.3	- - -	880	700	1120	910	- - -	1120	940	- - -
0.4	- - -	790	- - -	1030	- - -	- - -	1030	860	- - -
0.5	910	710	- - -	950	- - -	- - -	950	780	- - -
0.6	800	- - -	- - -	- - -	- - -	- - -	840	- - -	- - -

ESP Inches H_2O	COOLING MODE			MANUAL FAN and HEATING MODE					
	Wet Coil			45,000 BTU Input			41,000 BTU Input		
	High	Medium	Low	High	Medium	Low	High	Medium	Low
0.0	- - -	- - -	890	- - -	1120	940	- - -	1120	940
0.1	- - -	- - -	820	1260	1060	870	- - -	1060	870
0.2	- - -	950	770	1200	1010	810	1200	1010	810
0.3	- - -	880	700	1120	910	- - -	1120	940	750
0.4	- - -	790	- - -	1030	860	- - -	1030	860	680
0.5	910	710	- - -	950	780	- - -	950	780	- - -
0.6	800	- - -	- - -	840	- - -	- - -	840	- - -	- - -

Voltage adjustment – Reduce airflow by 100 CFM for 208 Volt

Dehumidification coil adjustment – Reduce airflow by 35 CFM for dehumidification coil installed

Top outlet adjustment – Increase airflow by 50 CFM for top outlet models

SG-3, RG-3, non-ducted application adjustment – Reduce airflow by 100 CFM for SG-3 and RG-3 installations

TABLE 11
W30G INDOOR BLOWER PERFORMANCE @ 230 AND 460 VOLTS

Recommended W30G cooling airflow range at rated 1000 CFM @ 0.35 ESP (WC) is 820 - 1150 CFM
Factory set on Medium Speed for cooling and for heating.

ESP Inches H_2O	COOLING MODE			MANUAL FAN and HEATING MODE					
	Wet Coil			90,000 BTU Input			81,000 BTU Input		
	High	Medium	Low	High	Medium	Low	High	Medium	Low
0.0	- - -	- - -	1060	- - -	1350	1120	- - -	1350	1120
0.1	- - -	- - -	1000	- - -	1260	1060	- - -	1260	1060
0.2	- - -	1160	950	1370	1200	1010	- - -	1200	1010
0.3	- - -	1080	880	1290	1120	940	- - -	1120	940
0.4	1150	990	- - -	1190	1030	- - -	1190	1030	860
0.5	1050	910	- - -	1090	950	- - -	1090	950	- - -
0.6	940	- - -	- - -	980	- - -	- - -	980	840	- - -

ESP Inches H_2O	COOLING MODE			MANUAL FAN and HEATING MODE					
	Wet Coil			68,000 BTU Input			61,000 BTU Input		
	High	Medium	Low	High	Medium	Low	High	Medium	Low
0.0	- - -	- - -	1060	- - -	1350	1120	- - -	- - -	1120
0.1	- - -	- - -	1000	- - -	1260	1060	- - -	- - -	1060
0.2	- - -	1160	950	- - -	1200	1010	- - -	- - -	1010
0.3	- - -	1080	880	- - -	1120	940	- - -	1120	940
0.4	1150	990	- - -	1190	1030	860	- - -	1030	860
0.5	1050	910	- - -	1090	950	780	1090	950	780
0.6	940	- - -	- - -	980	840	- - -	980	840	660

ESP Inches H_2O	COOLING MODE			MANUAL FAN and HEATING MODE					
	Wet Coil			45,000 BTU Input			41,000 BTU Input		
	High	Medium	Low	High	Medium	Low	High	Medium	Low
0.0	- - -	- - -	1060	- - -	1350	1120	- - -	- - -	1120
0.1	- - -	- - -	1000	- - -	1260	1060	- - -	- - -	1060
0.2	- - -	1160	950	- - -	1200	1010	- - -	1200	1010
0.3	- - -	1080	880	1290	1120	940	- - -	1120	940
0.4	1150	990	- - -	1190	1030	860	- - -	1030	860
0.5	1050	910	- - -	1090	950	780	1090	950	780
0.6	940	- - -	- - -	980	840	660	980	840	660

Voltage adjustment – Reduce airflow by 100 CFM for 208 Volt

Dehumidification coil adjustment – Reduce airflow by 35 CFM for dehumidification coil installed

Top outlet adjustment – Increase airflow by 50 CFM for top outlet models

SG-3, RG-3, non-ducted application adjustment – Reduce airflow by 100 CFM for SG-3 and RG-3 installations

TABLE 12
W36G INDOOR BLOWER PERFORMANCE @ 230 AND 460 VOLTS

Recommended W36G cooling airflow range at rated 1100 CFM @ 0.250 ESP (WC) is 935 - 1265 CFM
Factory set on Medium Speed for cooling and for heating.

ESP Inches H_2O	COOLING MODE			MANUAL FAN and HEATING MODE					
	Wet Coil			90,000 BTU Input			81,000 BTU Input		
	High	Medium	Low	High	Medium	Low	High	Medium	Low
0.0	- - -	- - -	1060	- - -	1350	1120	- - -	1350	1120
0.1	- - -	1220	1000	- - -	1260	1060	- - -	1260	1060
0.2	- - -	1160	950	1370	1200	1010	- - -	1200	1010
0.3	1250	1080	- - -	1290	1120	940	- - -	1120	940
0.4	1150	990	- - -	1190	1030	- - -	1190	1030	860
0.5	1050	- - -	- - -	1090	950	- - -	1090	950	- - -
0.6	940	- - -	- - -	980	- - -	- - -	980	840	- - -

ESP Inches H_2O	COOLING MODE			MANUAL FAN and HEATING MODE					
	Wet Coil			68,000 BTU Input			61,000 BTU Input		
	High	Medium	Low	High	Medium	Low	High	Medium	Low
0.0	- - -	- - -	1060	- - -	1350	1120	- - -	- - -	1120
0.1	- - -	1220	1000	- - -	1260	1060	- - -	- - -	1060
0.2	- - -	1160	950	- - -	1200	1010	- - -	- - -	1010
0.3	1250	1080	- - -	- - -	1120	940	- - -	1120	940
0.4	1150	990	- - -	1190	1030	860	- - -	1030	860
0.5	1050	- - -	- - -	1090	950	780	1090	950	780
0.6	940	- - -	- - -	980	840	- - -	980	840	660

ESP Inches H_2O	COOLING MODE			MANUAL FAN and HEATING MODE					
	Wet Coil			45,000 BTU Input			41,000 BTU Input		
	High	Medium	Low	High	Medium	Low	High	Medium	Low
0.0	- - -	- - -	1060	- - -	1350	1120	- - -	- - -	1120
0.1	- - -	1220	1000	- - -	1260	1060	- - -	- - -	1060
0.2	- - -	1160	950	- - -	1200	1010	- - -	1200	1010
0.3	1250	1080	- - -	1290	1120	940	- - -	1120	940
0.4	1150	990	- - -	1190	1030	860	- - -	1030	860
0.5	1050	- - -	- - -	1090	950	780	1090	950	780
0.6	940	- - -	- - -	980	840	660	980	840	660

Voltage adjustment – Reduce airflow by 100 CFM for 208 Volt

Dehumidification coil adjustment – Reduce airflow by 35 CFM for dehumidification coil installed

Top outlet adjustment – Increase airflow by 50 CFM for top outlet models

SG-3, RG-3, non-ducted application adjustment – Reduce airflow by 100 CFM for SG-3 and RG-3 installations

TABLE 13
W42G INDOOR BLOWER PERFORMANCE @ 230 AND 460 VOLTS

Recommended W42G cooling airflow range at rated 1300 CFM @ .35 ESP (WC) is 1500 - 1030 CFM
Factory set on Medium Speed for heating and cooling

ESP Inches H_sO	COOLING MODE			MANUAL FAN and HEATING MODE					
	Wet Coil			125,000 BTU Input			113,000 BTU Input		
	High	Medium	Low	High	Medium	Low	High	Medium	Low
.00	- - -	1540	1140	- - -	1640	1230	- - -	1640	1230
.10	- - -	1480	1090	- - -	1580	1180	- - -	1580	1180
.20	- - -	1410	1030	1880	1510	- - -	- - -	1510	1090
.30	- - -	1360	- - -	1760	1460	- - -	- - -	1460	- - -
.40	- - -	1250	- - -	1670	1340	- - -	1670	1340	- - -
.50	1460	1150	- - -	1560	1240	- - -	1560	1240	- - -
.60	1340	1040	- - -	1430	1130	- - -	1430	1130	- - -

ESP Inches H_sO	COOLING MODE			MANUAL FAN and HEATING MODE					
	Wet Coil			100,000 BTU			90,000 BTU Input		
	High	Medium	Low	High	Medium	Low	High	Medium	Low
.00	- - -	- - -	1190	- - -	1690	1280	- - -	1690	1280
.10	- - -	1530	1140	- - -	1630	1230	- - -	1630	1230
.20	- - -	1460	1070	- - -	1560	1160	- - -	1560	1160
.30	- - -	1410	1050	1810	1510	1140	- - -	1510	1140
.40	- - -	1300	- - -	1720	1390	- - -	1720	1390	1020
.50	1510	1200	- - -	1610	1290	- - -	1610	1290	970
.60	1390	1090	- - -	1480	1180	- - -	1480	1180	- - -

ESP Inches H_sO	COOLING MODE			MANUAL FAN and HEATING MODE					
	Wet Coil			75,000 BTU Input			68,000 BTU Input		
	High	Medium	Low	High	Medium	Low	High	Medium	Low
.00	- - -	- - -	1240	- - -	1740	1330	- - -	1740	1330
.10	- - -	- - -	1190	- - -	1680	1280	- - -	1680	1280
.20	- - -	1510	1120	- - -	1610	1210	- - -	1610	1210
.30	- - -	1460	1100	1860	1560	1190	- - -	1560	1190
.40	- - -	1340	- - -	1770	1440	1070	- - -	1440	1070
.50	- - -	1260	- - -	1660	1340	970	1660	1340	970
.60	1440	1140	- - -	1530	1230	- - -	1530	1230	- - -

Voltage adjustment – Reduce airflow by 130 CFM for 208 Volt

Top outlet adjustment – Increase airflow by 65 CFM for top outlet models

SG-5, RG-5, non-ducted application adjustment – Reduce airflow by 170 CFM for SG-5 and RG-5 installations

TABLE 14
W48G INDOOR BLOWER PERFORMANCE @ 230 AND 460 VOLTS

Recommended W48G cooling airflow range at rated 1550 CFM @ .38 ESP (WC) is 1750 - 1280 CFM
Factory set on High Speed for cooling and Medium Speed for heating.

ESP Inches H_sO	COOLING MODE			MANUAL FAN and HEATING MODE					
	Wet Coil			125,000 BTU Input			113,000 BTU Input		
	High	Medium	Low	High	Medium	Low	High	Medium	Low
.00	- - -	1540	- - -	- - -	1640	1230	- - -	1640	1230
.10	- - -	1480	- - -	- - -	1580	1180	- - -	1580	1180
.20	1780	1410	- - -	1880	1510	- - -	- - -	1510	1110
.30	1670	1360	- - -	1760	1460	- - -	- - -	1460	1090
.40	1570	1250	- - -	1670	1340	- - -	1670	1340	- - -
.50	1460	- - -	- - -	1560	1240	- - -	1560	1240	- - -
.60	1340	- - -	- - -	1430	- - -	- - -	1430	1130	- - -

ESP Inches H_sO	COOLING MODE			MANUAL FAN and HEATING MODE					
	Wet Coil			100,000 BTU			90,000 BTU Input		
	High	Medium	Low	High	Medium	Low	High	Medium	Low
.00	- - -	1590	- - -	- - -	1690	1280	- - -	1690	1280
.10	- - -	1530	- - -	- - -	1630	1230	- - -	1630	1230
.20	- - -	1460	- - -	- - -	1560	1160	- - -	1560	1160
.30	1700	1410	- - -	1810	1510	1140	- - -	1510	1140
.40	1620	1300	- - -	1720	1390	- - -	1720	1390	1020
.50	1510	- - -	- - -	1610	1290	- - -	1610	1290	970
.60	1390	- - -	- - -	1480	1180	- - -	1480	1180	- - -

ESP Inches H_sO	COOLING MODE			MANUAL FAN and HEATING MODE					
	Wet Coil			75,000 BTU Input			68,000 BTU Input		
	High	Medium	Low	High	Medium	Low	High	Medium	Low
.00	- - -	- - -	1640	- - -	1740	1330	- - -	1740	1330
.10	- - -	1580	- - -	- - -	1680	1280	- - -	1680	1280
.20	- - -	1510	- - -	- - -	1610	1210	- - -	1610	1210
.30	1750	1460	- - -	1860	1560	1190	- - -	1560	1190
.40	1670	1340	- - -	1770	1440	1070	- - -	1440	1070
.50	1560	1260	- - -	1660	1340	970	1660	1340	970
.60	1440	- - -	- - -	1530	1230	- - -	1530	1230	- - -

Voltage adjustment – Reduce airflow by 130 CFM for 208 Volt

Top outlet adjustment – Increase airflow by 65 CFM for top outlet models

SG-5, RG-5, non-ducted application adjustment – Reduce airflow by 170 CFM for SG-5 and RG-5 installations

TABLE 15
W60G INDOOR BLOWER PERFORMANCE @ 230 AND 460 VOLTS

Recommended W60G cooling airflow range at rated 1650 CFM @ .30 ESP (WC) is 1910 - 1340 CFM
Factory set on High Speed for cooling and Medium Speed for heating.

ESP Inches H_sO	COOLING MODE			MANUAL FAN and HEATING MODE					
	Wet Coil			125,000 BTU Input			113,000 BTU Input		
	High	Medium	Low	High	Medium	Low	High	Medium	Low
.00	1930	1540	- - -	- - -	1640	1230	- - -	1640	1230
.10	1850	1480	- - -	- - -	1580	1180	- - -	1580	1180
.20	1780	1410	- - -	1880	1510	- - -	- - -	1510	1110
.30	1670	1360	- - -	1760	1460	- - -	- - -	1460	1090
.40	1570	- - -	- - -	1670	1340	- - -	1670	1340	- - -
.50	1460	- - -	- - -	1560	1240	- - -	1560	1240	- - -
.60	1340	- - -	- - -	1430	- - -	- - -	1430	1130	- - -

ESP Inches H_sO	COOLING MODE			MANUAL FAN and HEATING MODE					
	Wet Coil			100,000 BTU			90,000 BTU Input		
	High	Medium	Low	High	Medium	Low	High	Medium	Low
.00	- - -	1590	- - -	- - -	1690	1280	- - -	1690	1280
.10	1900	1530	- - -	- - -	1630	1230	- - -	1630	1230
.20	1830	1460	- - -	- - -	1560	1160	- - -	1560	1160
.30	1700	1410	- - -	1810	1510	1140	- - -	1510	1140
.40	1620	- - -	- - -	1720	1390	- - -	1720	1390	1020
.50	1510	- - -	- - -	1610	1290	- - -	1610	1290	970
.60	1390	- - -	- - -	1480	1180	- - -	1480	1180	- - -

ESP Inches H_sO	COOLING MODE			MANUAL FAN and HEATING MODE					
	Wet Coil			75,000 BTU Input			68,000 BTU Input		
	High	Medium	Low	High	Medium	Low	High	Medium	Low
.00	- - -	1640	- - -	- - -	1740	1330	- - -	1740	1330
.10	1950	1580	- - -	- - -	1680	1280	- - -	1680	1280
.20	1880	1510	- - -	- - -	1610	1210	- - -	1610	1210
.30	1750	1460	- - -	1860	1560	1190	- - -	1560	1190
.40	1670	1340	- - -	1770	1440	1070	- - -	1440	1070
.50	1560	- - -	- - -	1660	1340	970	1660	1340	970
.60	1440	- - -	- - -	1530	1230	- - -	1530	1230	- - -

Voltage adjustment – Reduce airflow by 130 CFM for 208 Volt

Top outlet adjustment – Increase airflow by 65 CFM for top outlet models

SG-5, RG-5, non-ducted application adjustment – Reduce airflow by 170 CFM for SG-5 and RG-5 installations

TABLE 16
INTEGRATED FURNACE AND BLOWER CONTROL OPERATION

IGNITION SEQUENCE CONTROL

Ignition Source	24 VAC DSI
Flame Sensing	Remote
Timings	
- Prepurge	15 seconds
- Postpurge	30 seconds (0 if cycle terminated before valve "on")
- Inter-trial purge	15 seconds
- Pressure switch proving period	60 seconds
- Trials for ignition	3 per ignition sequence
- Trial for ignition	7 seconds total time to prove flame
- Ignition sequence lockout	60 minutes (after 3 trials for ignition), auto reset - can be reset during the 60 minute lockout period by opening thermostat circuit for 3 seconds or more
- Heat blower on - delay	30 seconds (timing starts when ignitor cycles off)
- Heat blower off - delay	90, 120, 150 sconds selectable; factory set at 120
- Cool blower on - delay	7 seconds
- Cool blower off - delay	60 seconds
- Manual fan operations	Operates on selected heating speed and cycles off during ignition or burner start up sequence.
- High limit control operation	Automatic reset, ignition sequence restart. See Note 1.
- Flame rollout switch operation	Manual reset, igniton sequence initiated after switch is manually reset. See Note 1.

NOTE 1: After the fourth limit trip on a given call for heat there will be a 1 hour delay before the ignition sequence will restart. After either high limit switch or flame rollout switch actuation the inducer will operate for the 30 second post purge and the comfort air blower will operate for the selected off delay. If on Manual Fan operation, the comfort air blower will continue to operate.

SAFETY UNITS

High limit / Rollout	SPST in 24 Volt
Pressure switch	SPST, safe start check

COMFORT FAN CONTROL

Heating Speed Fan	
Normal operation	
- ON delay	30 seconds fixed. Timing starts when igniter de-energized
- OFF delay	3 selectable timings -120 seconds standard can be changed to 90 or 150 seconds.
Limit Operation	ON when limit OPEN OFF after OFF delay when limit CLOSES
Flame Sense	ON if flame is sensed ***and*** there is no call for heat.
Cooling Speed Fan	
- ON delay	7 seconds
- OFF delay	60 seconds
Manual Fan	ON continuously on HEATING speed. When call for cool, the fan switches to COOLING speed. Then when thermostat satisfied, the fan switches back to HEATING speed after COOLING OFF delay.

DIAGNOSTIC INDICATOR

A red LED is provided to indicate system faults as follows:

Steady ON - Control okay in standby, call for heat, cool or fan modes
Steady OFF - Internal control fault or no power. Also check 3A fuse on control.
1 flash - Lockout due to failed ignition or flame dropouts
2 flashes - Pressure switch open with inducer on
3 flashes - Pressure switch is closed with inducer off
4 flashes - Limit switch is open
5 flashes - Flame detected with gas valve closed
6 flashes - Compressor output delayed from short cycle/staging timer
The flash rate is 0.25 seconds on, 0.25 seconds off with 2.0 seconds pause between flash codes.
The flash rate is 0.25 seonds on, 0.25 seconds off with 2.0 seconds pause between flash codes.

33. PRESSURE SERVICE PORTS

High and low pressure service ports are installed on all units so that the system operating pressures can be observed. Tables 17A & 17B outlines expected pressures at various indoor and outdoor temperatures.

TABLE 17A
COOLING PRESSURE TABLE

Model	Return Air Temperature	Pressure	60°	65°	70°	75°	80°	85°	90°	95°	100°	105°	110°	115°	120°	125°
W24G1	75 deg. DB	Low Side	105	108	111	115	118	121	124	127	129	131	134	136	138	140
	62 deg. WB	High Side	227	250	273	296	319	342	364	387	415	442	469	497	524	552
	80 deg. DB	Low Side	120	123	126	129	131	134	137	140	142	145	147	149	152	155
	67 deg. WB	High Side	235	258	282	305	329	352	376	399	427	456	484	512	540	569
	85 deg. DB	Low Side	133	136	139	141	144	147	150	153	156	158	161	164	166	169
	72 deg. WB	High Side	245	268	292	316	340	363	387	411	440	469	498	527	556	585
W30G1	75 deg. DB	Low Side	110	113	116	119	122	125	128	131	133	134	136	138	139	141
	62 deg. WB	High Side	238	262	287	311	335	359	383	407	435	463	491	519	547	575
	80 deg. DB	Low Side	126	129	131	134	137	139	142	145	146	148	150	152	154	156
	67 deg. WB	High Side	246	271	296	321	345	370	395	420	449	477	506	535	564	592
	85 deg. DB	Low Side	139	142	145	147	150	153	155	158	160	162	164	166	168	170
	72 deg. WB	High Side	257	282	307	332	357	382	407	432	461	491	521	550	580	609
W36G1	75 deg. DB	Low Side	112	115	117	120	123	125	128	131	132	133	135	136	138	139
	62 deg. WB	High Side	256	280	304	328	352	377	401	425	452	480	508	536	563	591
	80 deg. DB	Low Side	128	130	132	135	137	139	142	144	146	147	149	150	152	153
	67 deg. WB	High Side	265	290	314	339	364	388	413	438	466	495	524	552	581	610
	85 deg. DB	Low Side	141	144	146	148	150	153	155	157	159	161	162	164	166	168
	72 deg. WB	High Side	276	301	326	351	376	400	425	450	480	509	539	568	597	627

TABLE 17B
COOLING PRESSURE TABLE

Model	Return Air Temperature	Pressure	60°	65°	70°	75°	80°	85°	90°	95°	100°	105°	110°	115°	120°	125°
W42G1	75 deg. DB	Low Side	107	109	112	115	118	121	123	126	128	130	132	133	135	137
	62 deg. WB	High Side	231	254	277	299	322	345	368	391	417	444	470	497	523	550
	80 deg. DB	Low Side	122	124	127	129	132	134	137	139	141	143	145	147	149	151
	67 deg. WB	High Side	239	262	286	309	333	356	380	403	430	458	485	512	539	567
	85 deg. DB	Low Side	134	137	139	142	144	147	149	152	154	156	159	161	163	165
	72 deg. WB	High Side	249	272	296	320	343	367	391	415	443	471	499	527	555	583
W48G1	75 deg. DB	Low Side	104	107	110	113	116	119	122	125	126	128	130	132	133	135
	62 deg. WB	High Side	241	264	287	311	334	358	381	404	433	462	490	519	548	576
	80 deg. DB	Low Side	118	121	124	126	129	132	135	137	139	141	143	145	147	149
	67 deg. WB	High Side	249	273	297	321	345	369	393	417	446	476	505	535	565	594
	85 deg. DB	Low Side	131	133	136	139	142	144	147	150	152	154	156	159	161	163
	72 deg. WB	High Side	259	283	308	332	356	381	404	429	459	489	520	550	581	611
W60G1	75 deg. DB	Low Side	108	111	114	116	119	122	125	127	129	130	132	133	135	137
	62 deg. WB	High Side	241	267	292	318	343	369	394	420	447	475	503	531	559	587
	80 deg. DB	Low Side	123	126	128	131	133	136	138	140	142	144	145	147	149	151
	67 deg. WB	High Side	249	275	302	328	354	380	406	433	461	490	519	548	576	605
	85 deg. DB	Low Side	136	139	141	144	146	149	151	154	155	157	159	161	163	164
	72 deg. WB	High Side	260	286	313	339	366	392	418	445	474	504	534	563	593	622

Low side pressure ± 2 PSIG
High side pressure ± 5 PSIG

Tables based upon rated CFM (airflow) across the evaporator coil.

If there is any doubt as to correct operating charge being in the system, the charge should be reclaimed, system evacuated and recharged to serial plate instruction.

34. REFRIGERANT CHARGE

The correct system R-410A charge is shown on the unit rating plate. Optimum unit performance will occur with a refrigerant charge resulting in a suction line temperature (6" from compressor) as shown in Table 18.

The suction line temperatures in Table 18 are based upon 80 degrees F dry bulb / 67 degree wet bulb (50% R.H.) temperature and rated airflow across the evaporator during cooling cycle. If charge quantity is in doubt, reclaim and recharge to factory name plate quantity.

Total system charge for these models can be found in Table 1.

TABLE 18
REFRIGERANT CHARGE

Model	Rated Airflow	95 Deg. F OD Temp.
W24G	800	63 - 65
W30G	1000	63 - 65
W36G	1100	62 - 64
W42G	1300	61 - 63
W48G	1550	61 - 63
W60G	1650	59 - 61

35. FAN BLADE SETTING DIMENSIONS

Shown in Figure 21 is the correct fan blade setting dimension for proper air delivery across the outdoor coil.

FIGURE 21
FAN BLADE

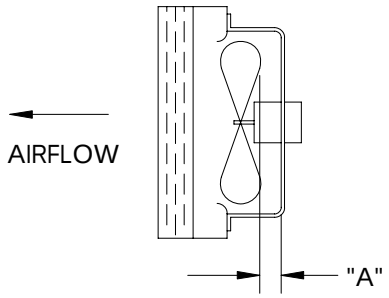

MIS-1724

TABLE 19
FAN BLADE DIMENSION

Model	Dimension A
W24G	1.25
W30G	1.25
W36G	1.25
W42G	1.75
W48G	1.75
W60G	1.75

36. LOW-NOX BURNER ASSEMBLY "N" SUFFIX MODELS ONLY – U.S. INSTALLATIONS ONLY

NATURAL GAS MODELS ONLY

Model numbers designated with an "N" are designed for low NOx emissions which comply with all California Air Quality Management District regulations for nitrogen oxide emission levels. Refer to Figure 22 for NOx insert information.

*** * IMPORTANT * ***

For propane (LP) conversions the NOx reduction screen inserts shown below must be removed. This is accomplished by removing the burner box assembly and removing the NOx screens. Reassemble unit properly before firing. Failure to remove the NOx screens can result in improper operation and malfunction of the burner system.

FIGURE 22
LOW NOX INSERT

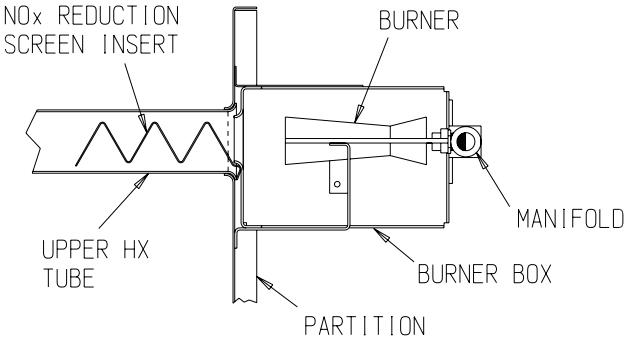

MIS-1481

INDEX

WIRING DIAGRAMS and LADDER DIAGRAMS

Unit Model No.	Basic Wiring Diagram	Manual Page No.	Basic Ladder Diagram	Manual Page No.
W24G1-A	4085-144B	50	4085-145	51
W24G1-B	4085-244B	52	4085-245	53
W24G1-C	4085-365B	54	4085-366	55
W30G1-A	4085-146B	56	4085-147	57
W30G1-B	4085-246B	58	4085-247	59
W30G1-C	4085-367B	60	4085-368	61
W36G1-A	4085-146B	56	4085-147	57
W36G1-B	4085-246B	58	4085-247	59
W36G1-C	4085-367B	60	4085-368	61
W42G1-A	4085-146B	56	4085-147	57
W42G1-B	4085-246B	58	4085-247	59
W42G1-C	4085-367B	60	4085-368	61
W48G1-A	4085-148A	62	4085-145	63
W48G1-B	4085-248A	64	4085-245	65
W48G1-C	4085-369B	66	4085-370	67
W60G1-A	4085-148A	62	4085-145	63
W60G1-B	4085-248A	64	4085-245	65
W60G1-C	4085-369B	66	4085-370	67

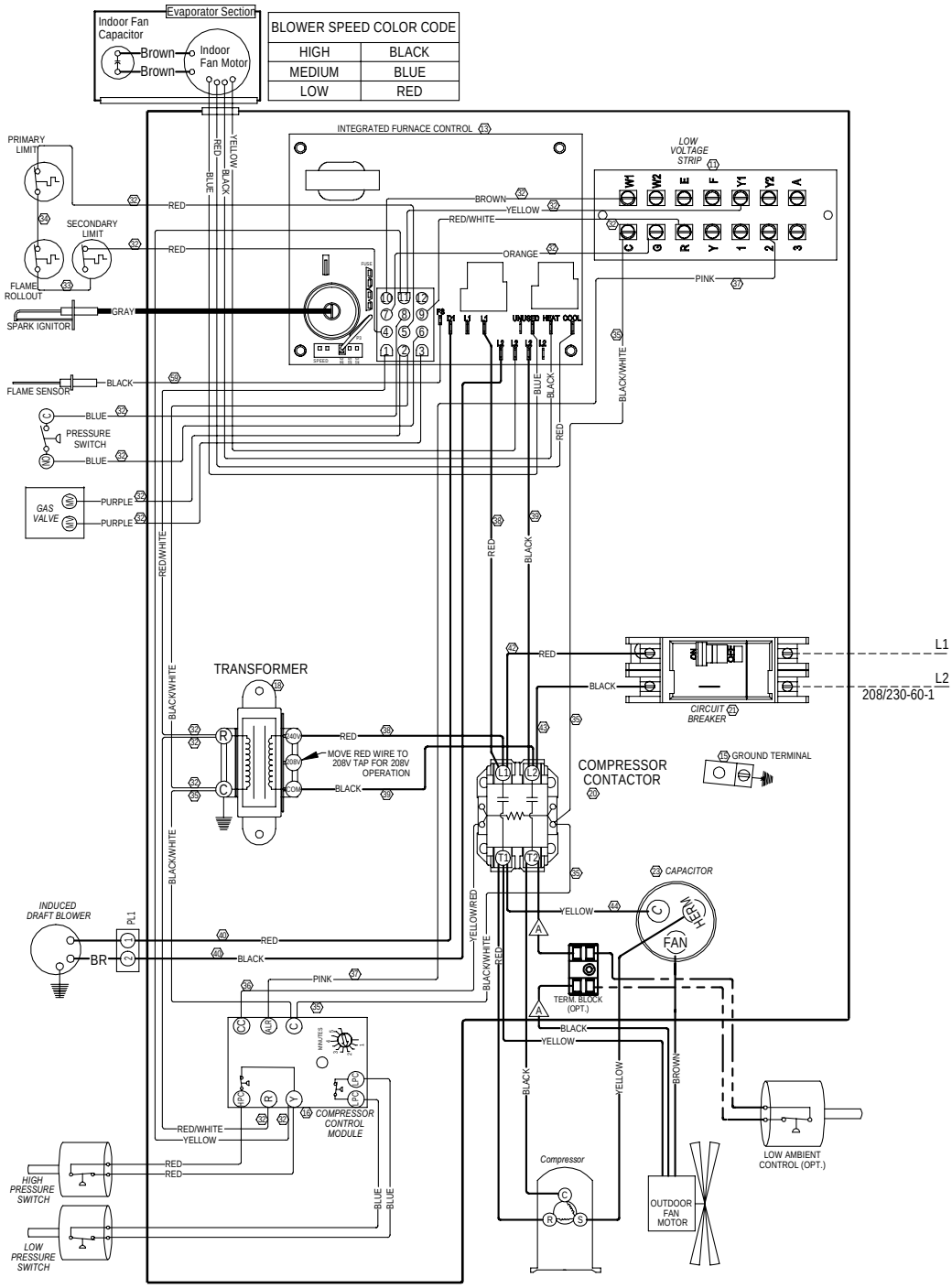

Model	C. Breaker	Capacitor
W24G1-A	30A	40+5/440

USE COPPER CONDUCTORS SUITABLE FOR AT LEAST 75° C

IF ANY ORIGINAL WIRE AS SUPPLIED WITH THE APPLIANCE MUST BE REPLACED, IT MUST BE REPLACED WITH WIRING MATERIAL HAVING A TEMPERATURE RATING OF AT LEAST 105° C EXCEPT THE IGNITION CABLE WHICH IS 250°C HIGH VOLTAGE CABLE

Wire Identification numbers for Bard use only.

	Factory	Field	Optional
High Voltage			
Low Voltage			

A WIRES CONNECT IF OPTION NOT USED

Bard Mfg. Co. Bryan, Ohio

4085-144 B

W24G1-A 230/208-60-1

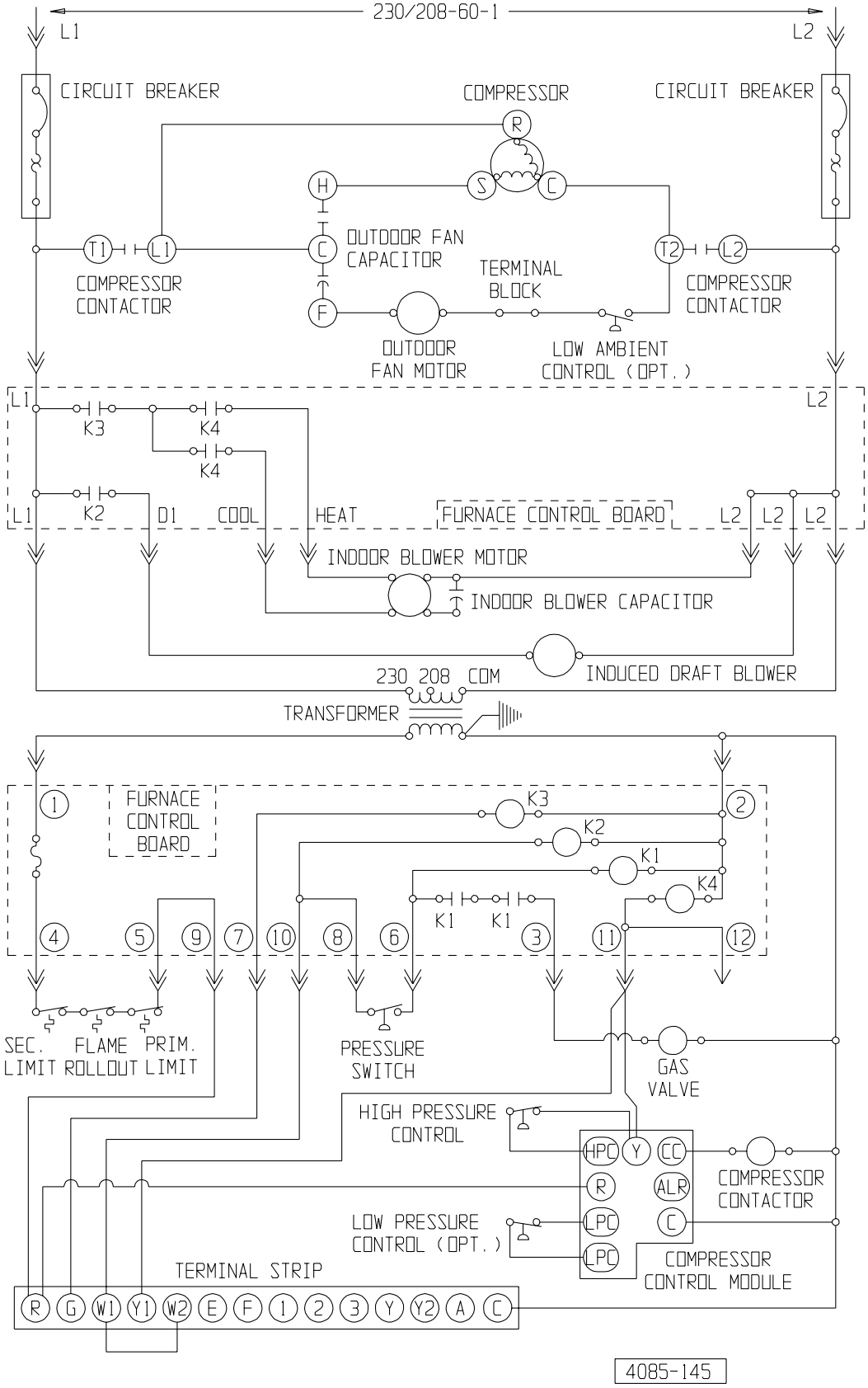

W24G1-A 230/208-60-1

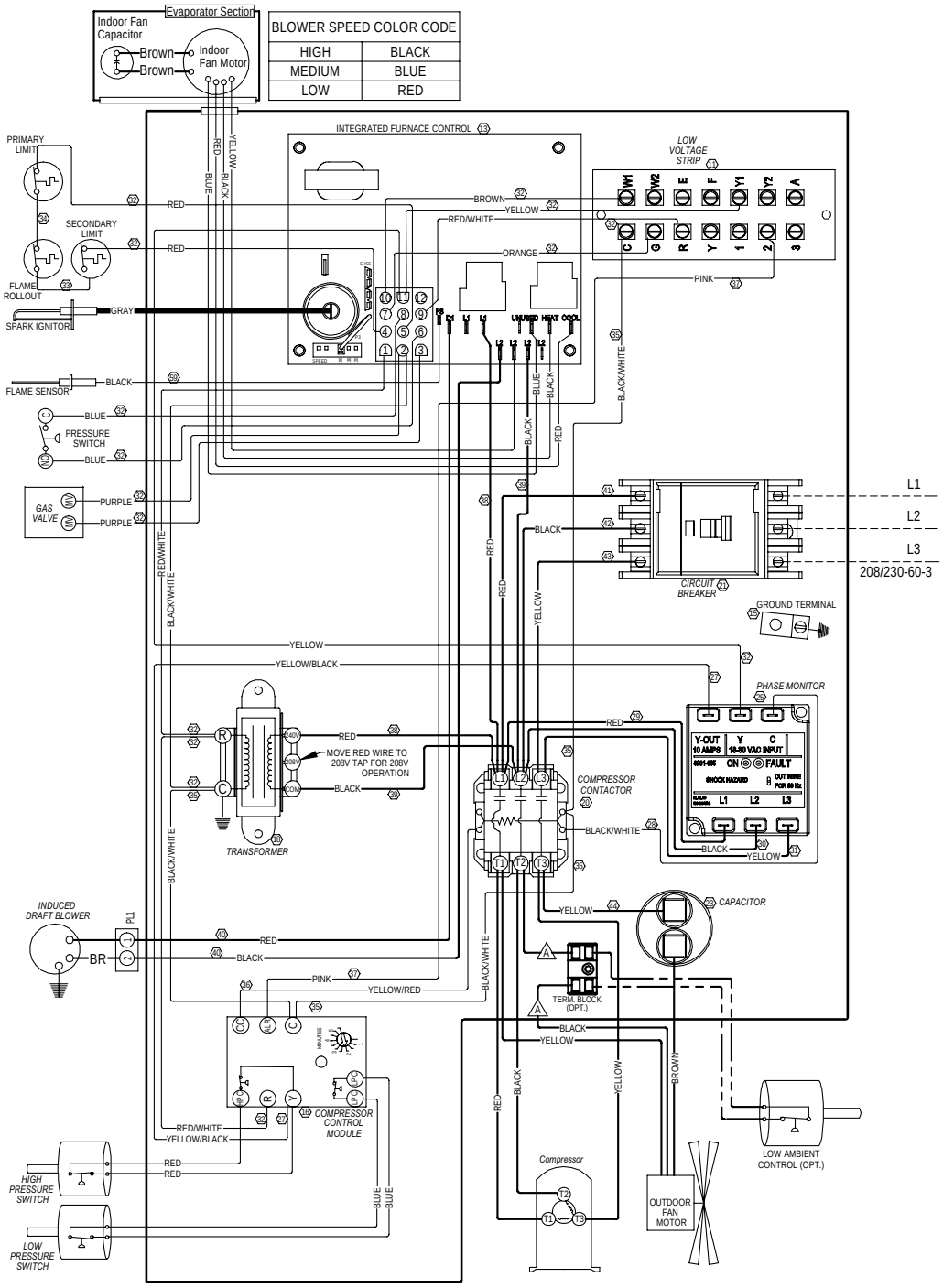

BLOWER SPEED COLOR CODE	
HIGH	BLACK
MEDIUM	BLUE
LOW	RED

Model	C. Breaker	Fan Capacitor
W24G1-B	25A	5/370

USE COPPER CONDUCTORS SUITABLE FOR AT LEAST 75° C

IF ANY ORIGINAL WIRE AS SUPPLIED WITH THE APPLIANCE MUST BE REPLACED, IT MUST BE REPLACED WITH WIRING MATERIAL HAVING A TEMPERATURE RATING OF AT LEAST 105° C EXCEPT THE IGNITION CABLE WHICH IS 250°C HIGH VOLTAGE CABLE

Wire Identification numbers for Bard use only.

	Factory	Field	Optional
High Voltage			
Low Voltage			

A WIRES CONNECT IF OPTION NOT USED

Bard Mfg. Co. Bryan, Ohio

4085-244 B

W24G1-B 230/208-60-3

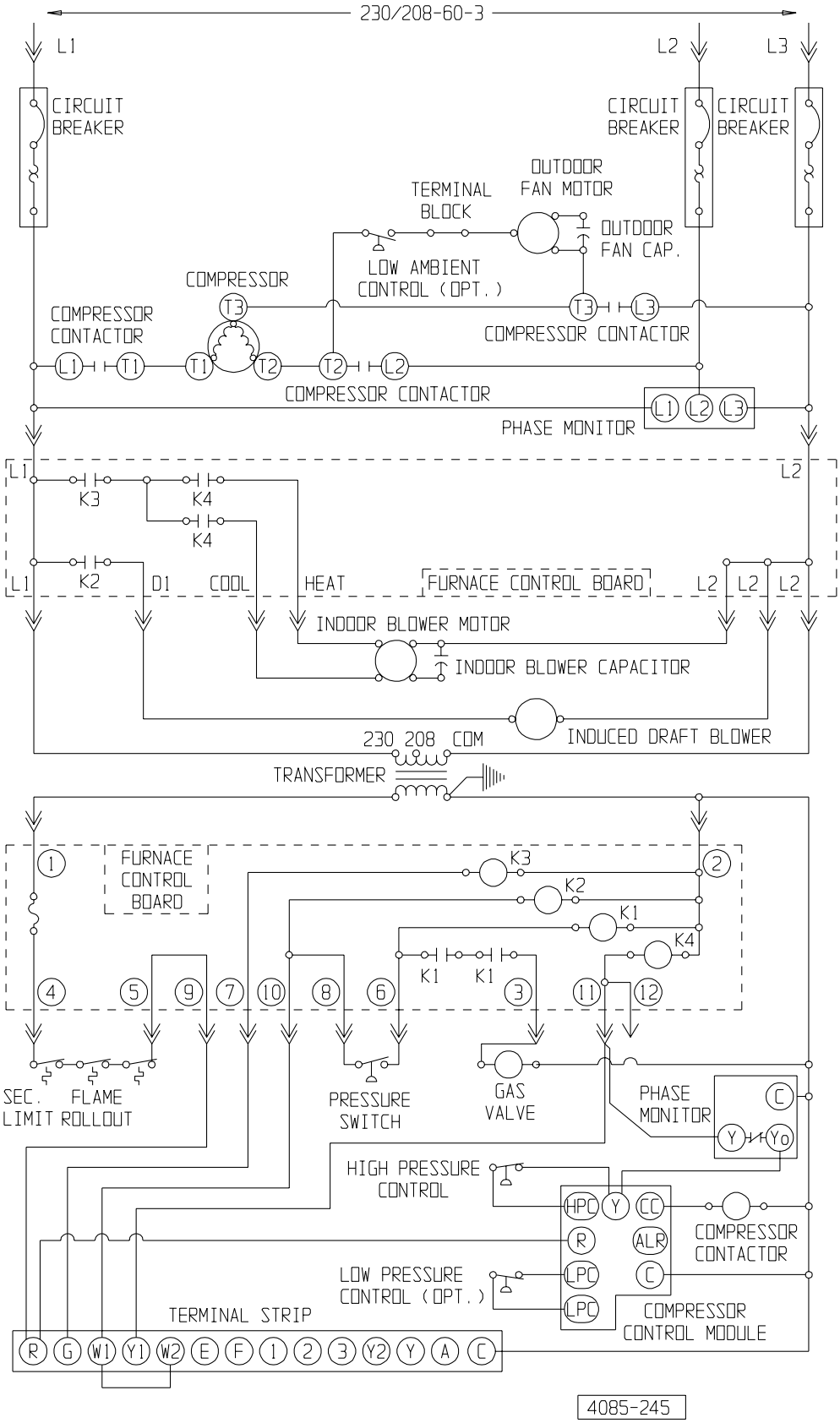

W24G1-B 230/208-60-3

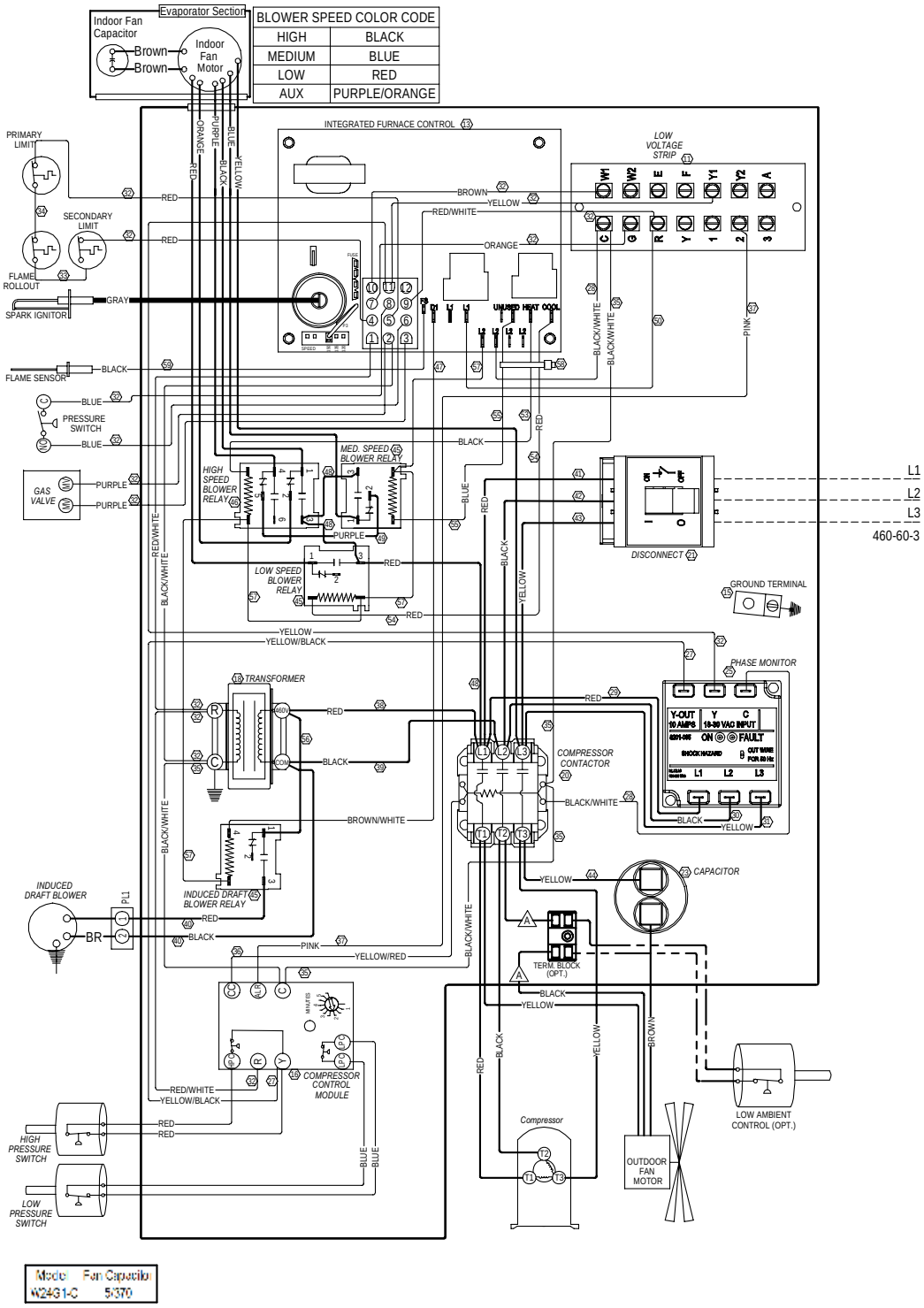

USE COPPER CONDUCTORS SUITABLE FOR AT LEAST 75° C

IF ANY ORIGINAL WIRE AS SUPPLIED WITH THE APPLIANCE MUST BE REPLACED, IT MUST BE REPLACED WITH WIRING MATERIAL HAVING A TEMPERATURE RATING OF AT LEAST 105° C EXCEPT THE IGNITION CABLE WHICH IS 250°C HIGH VOLTAGE CABLE

Wire Identification numbers for Bard use only.

	Factory	Field	Optional
High Voltage			
Low Voltage			

A WIRES CONNECT IF OPTION NOT USED

Bard Mfg. Co. Bryan, Ohio

4085-365 B

W24G1-C 460-60-3

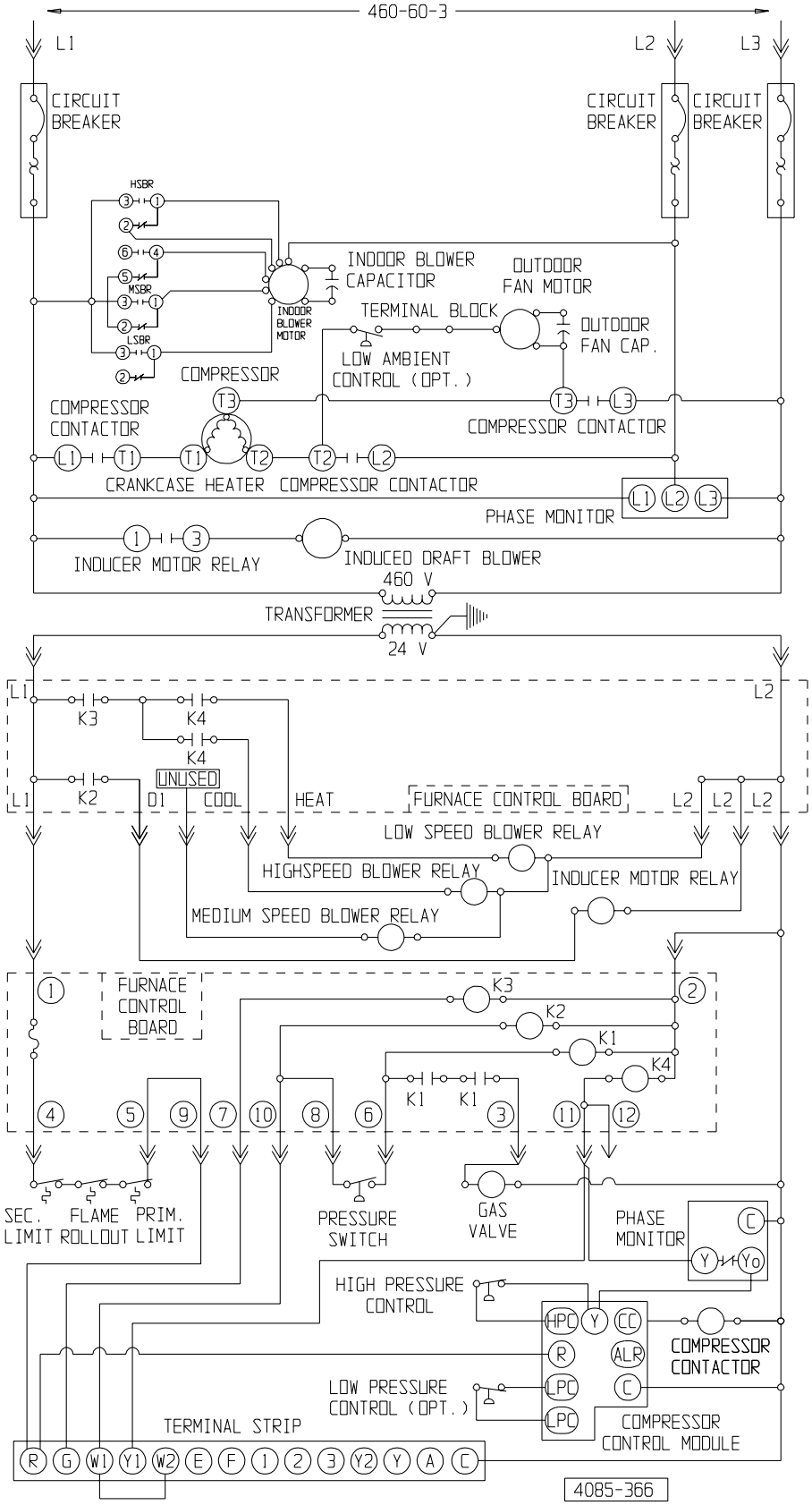

W24G1-C 460-60-3

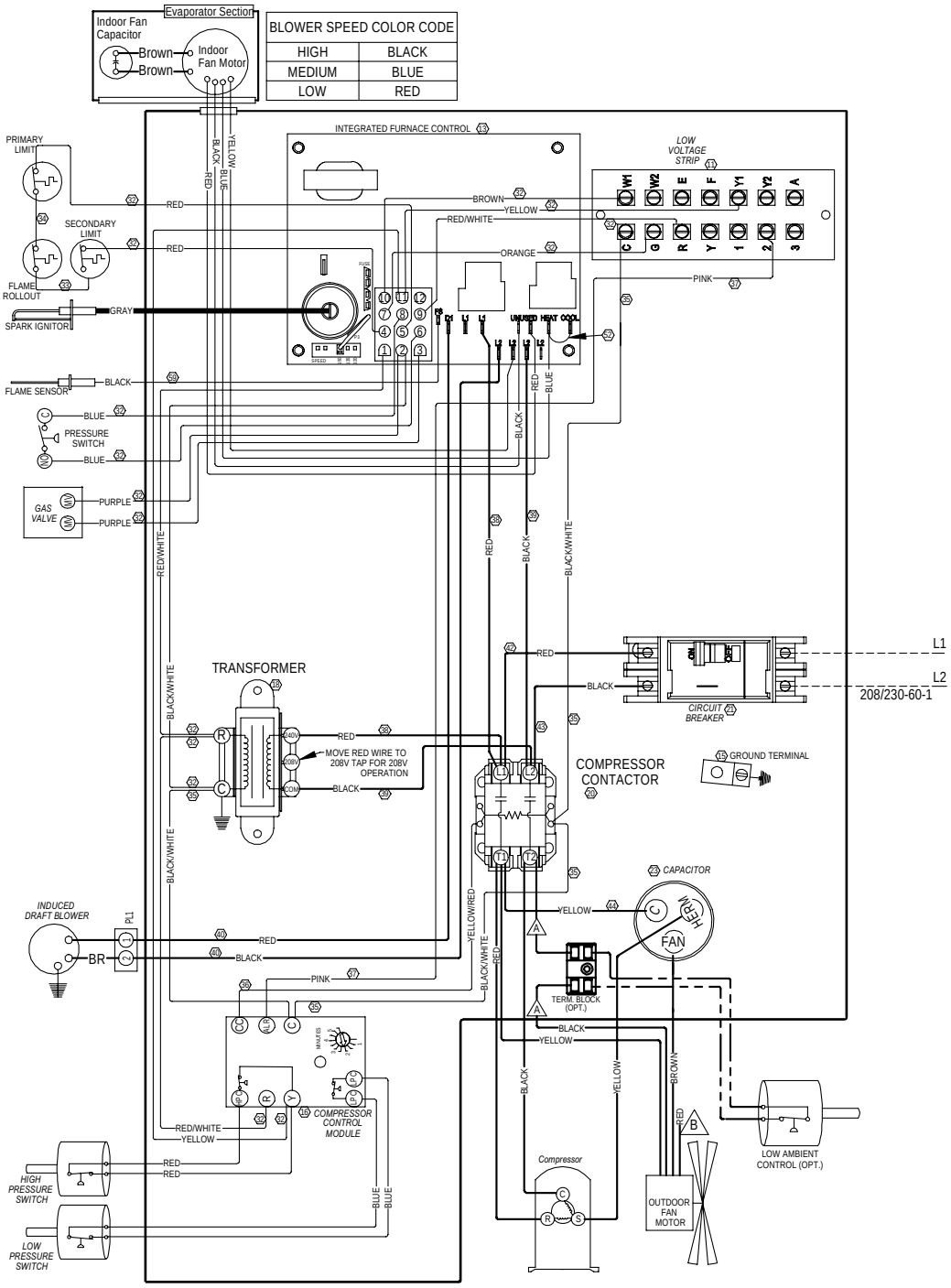

Model	C. Breaker	Capacitor
W30G1-A	30A	45+5/370
W36G1-A	35A	45+5/370
W42G1-A	50A	45+10/370

USE COPPER CONDUCTORS SUITABLE FOR AT LEAST 75° C

IF ANY ORIGINAL WIRE AS SUPPLIED WITH THE APPLIANCE MUST BE REPLACED, IT MUST BE REPLACED WITH WIRING MATERIAL HAVING A TEMPERATURE RATING OF AT LEAST 105° C EXCEPT THE IGNITION CABLE WHICH IS 250°C HIGH VOLTAGE CABLE

Wire Identification numbers for Bard use only.

	Factory	Field	Optional
High Voltage			
Low Voltage			

A WIRES CONNECT IF OPTION NOT USED

B WIRE NOT APPLICABLE TO ALL MODELS

Bard Mfg. Co. Bryan, Ohio

4085-146 B

W30G1-A, W36G1-A, W42G1-A 230/208-60-1

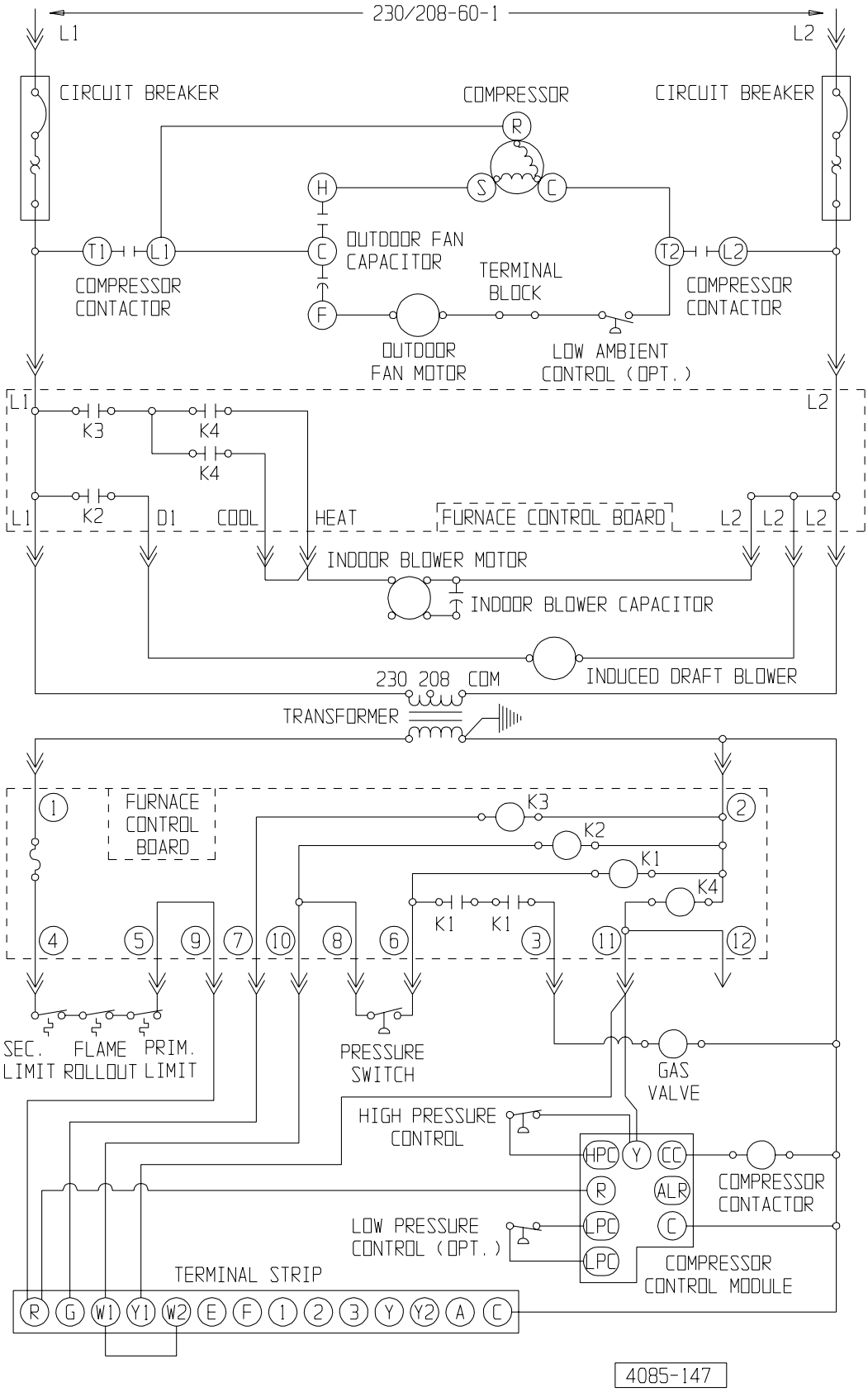

W30G1-A, W36G1-A, W42G1-A 230/208-60-1

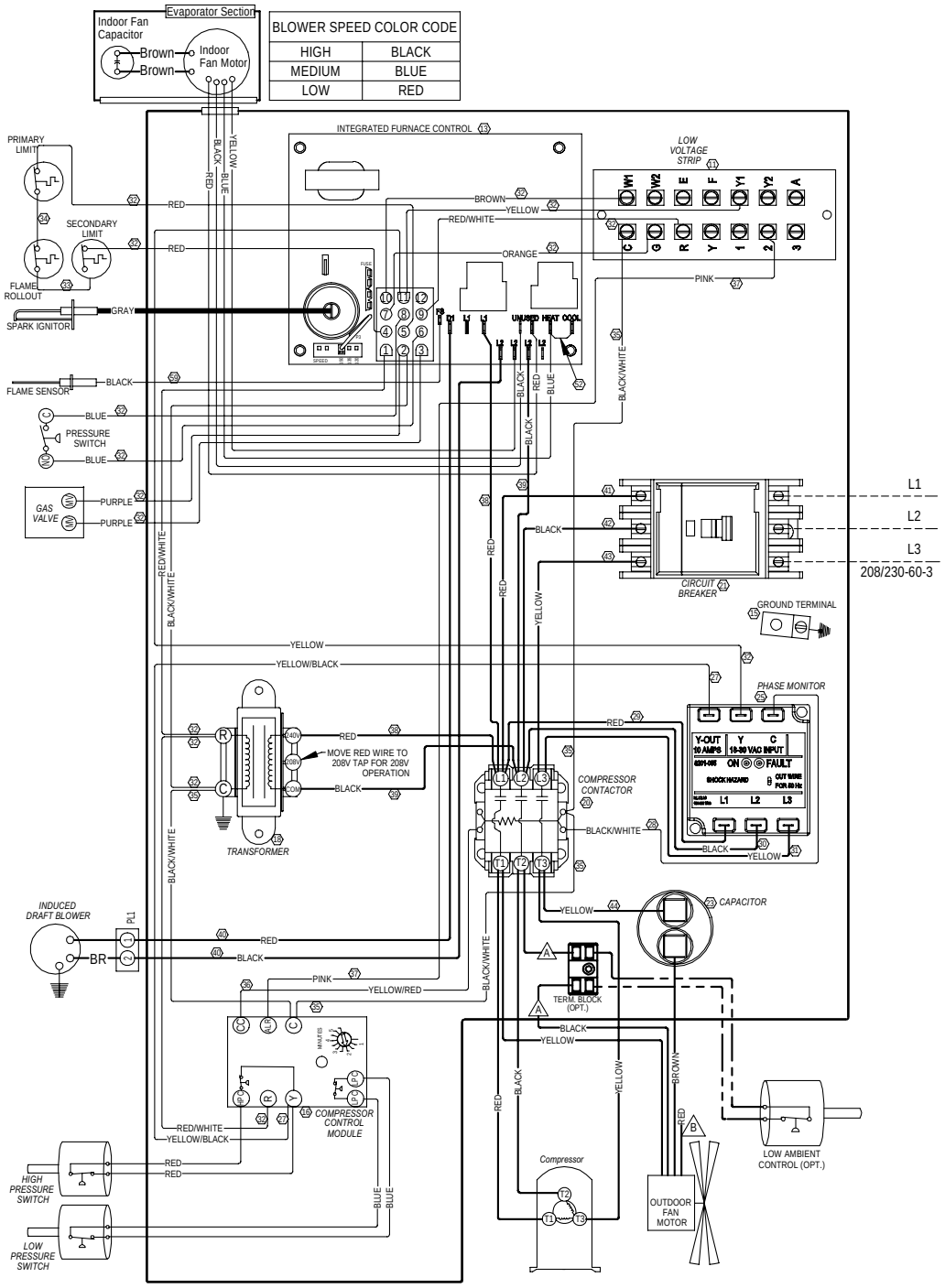

BLOWER SPEED COLOR CODE	
HIGH	BLACK
MEDIUM	BLUE
LOW	RED

Model	C. Breaker	Fan Capacitor
W30G1-B	25A	5/370
W36G1-B	35A	5/370
W42G1-B	35A	10/370

USE COPPER CONDUCTORS SUITABLE FOR AT LEAST 75° C

IF ANY ORIGINAL WIRE AS SUPPLIED WITH THE APPLIANCE MUST BE REPLACED, IT MUST BE REPLACED WITH WIRING MATERIAL HAVING A TEMPERATURE RATING OF AT LEAST 105° C EXCEPT THE IGNITION CABLE WHICH IS 250°C HIGH VOLTAGE CABLE

Wire Identification numbers for Bard use only.

	Factory	Field	Optional
High Voltage			
Low Voltage			

A WIRES CONNECT IF OPTION NOT USED

B WIRE NOT APPLICABLE TO ALL MODELS

Bard Mfg. Co. Bryan, Ohio

4085-246 B

W30G1-B, W36G1-B, W42G1-B 230/208-60-3

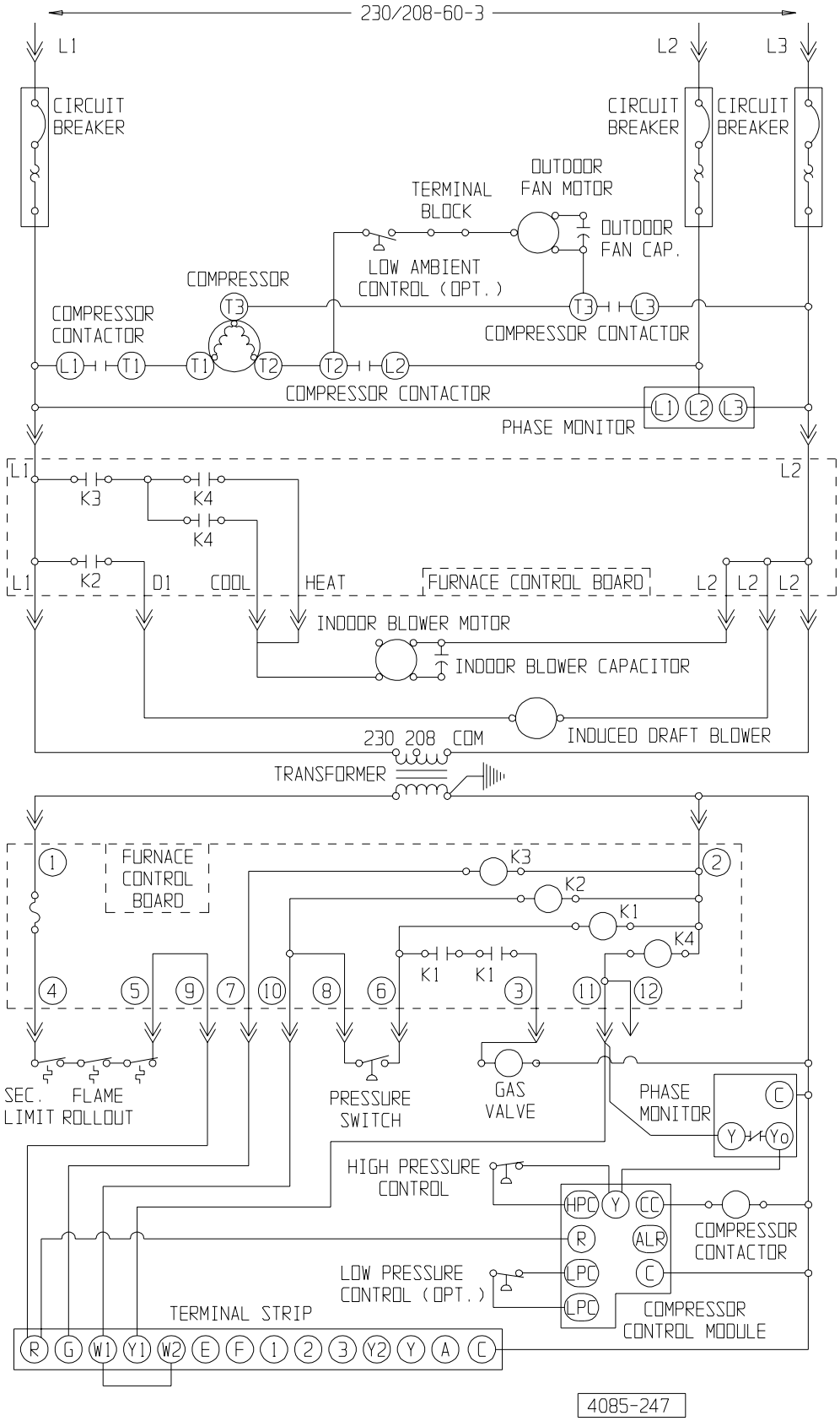

W30G1-B, W36G1-B, W42G1-B 230/208-60-3

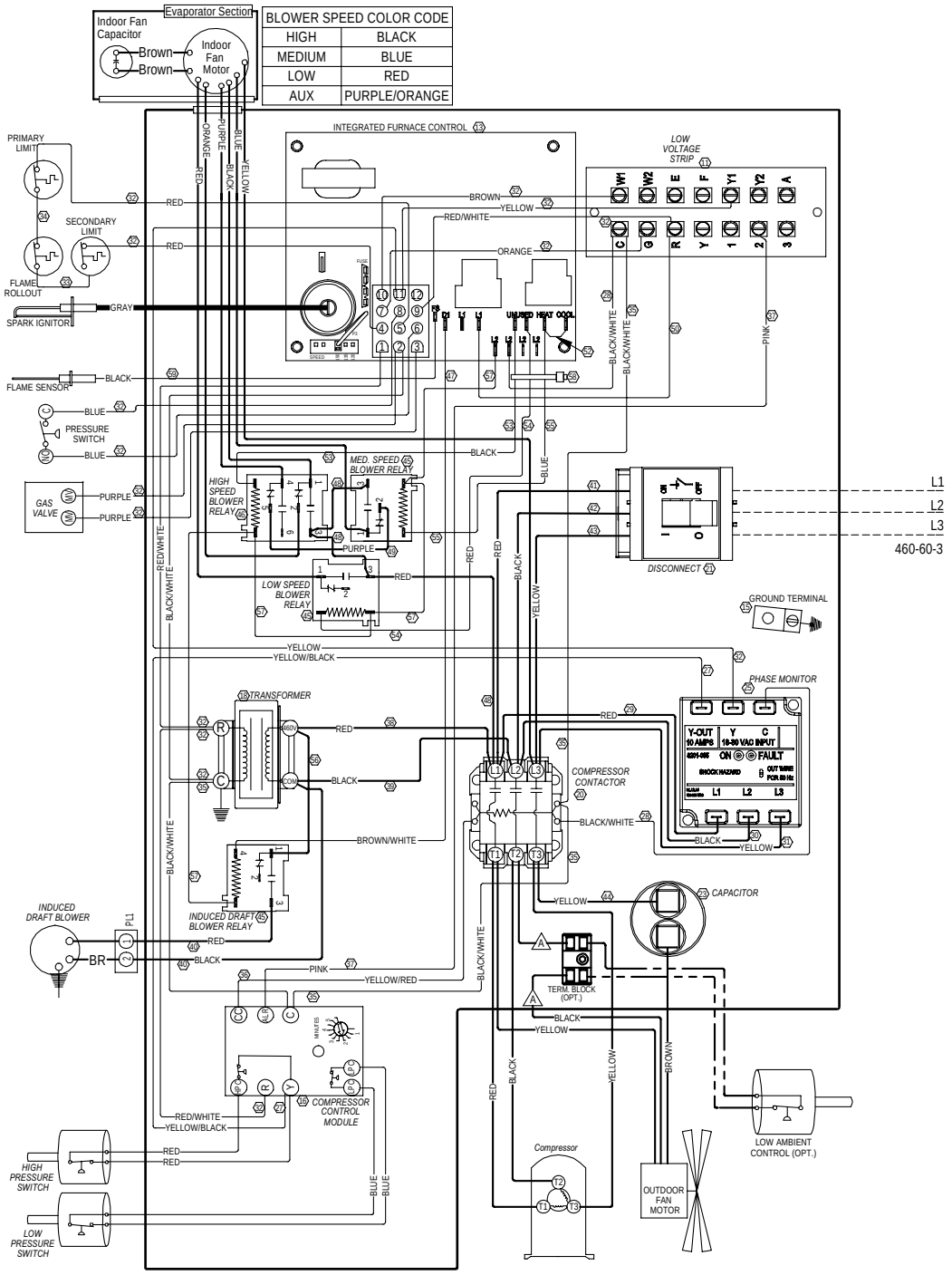

Model	Fan Capacitor
W30G1-C	5/370
W36G1-C	5/370
W42G1-C	15/370

BLOWER SPEED COLOR CODE	
HIGH	BLACK
MEDIUM	BLUE
LOW	RED
AUX	PURPLE/ORANGE

USE COPPER CONDUCTORS SUITABLE FOR AT LEAST 75° C

IF ANY ORIGINAL WIRE AS SUPPLIED WITH THE APPLIANCE MUST BE REPLACED, IT MUST BE REPLACED WITH WIRING MATERIAL HAVING A TEMPERATURE RATING OF AT LEAST 105° C EXCEPT THE IGNITION CABLE WHICH IS 250°C HIGH VOLTAGE CABLE

Wire Identification numbers for Bard use only.

	Factory	Field	Optional
High Voltage			
Low Voltage			

A WIRES CONNECT IF OPTION NOT USED

Bard Mfg. Co. Bryan, Ohio

4085-367 B

W30G1-C, W36G1-C, W42G1-C 460-60-3

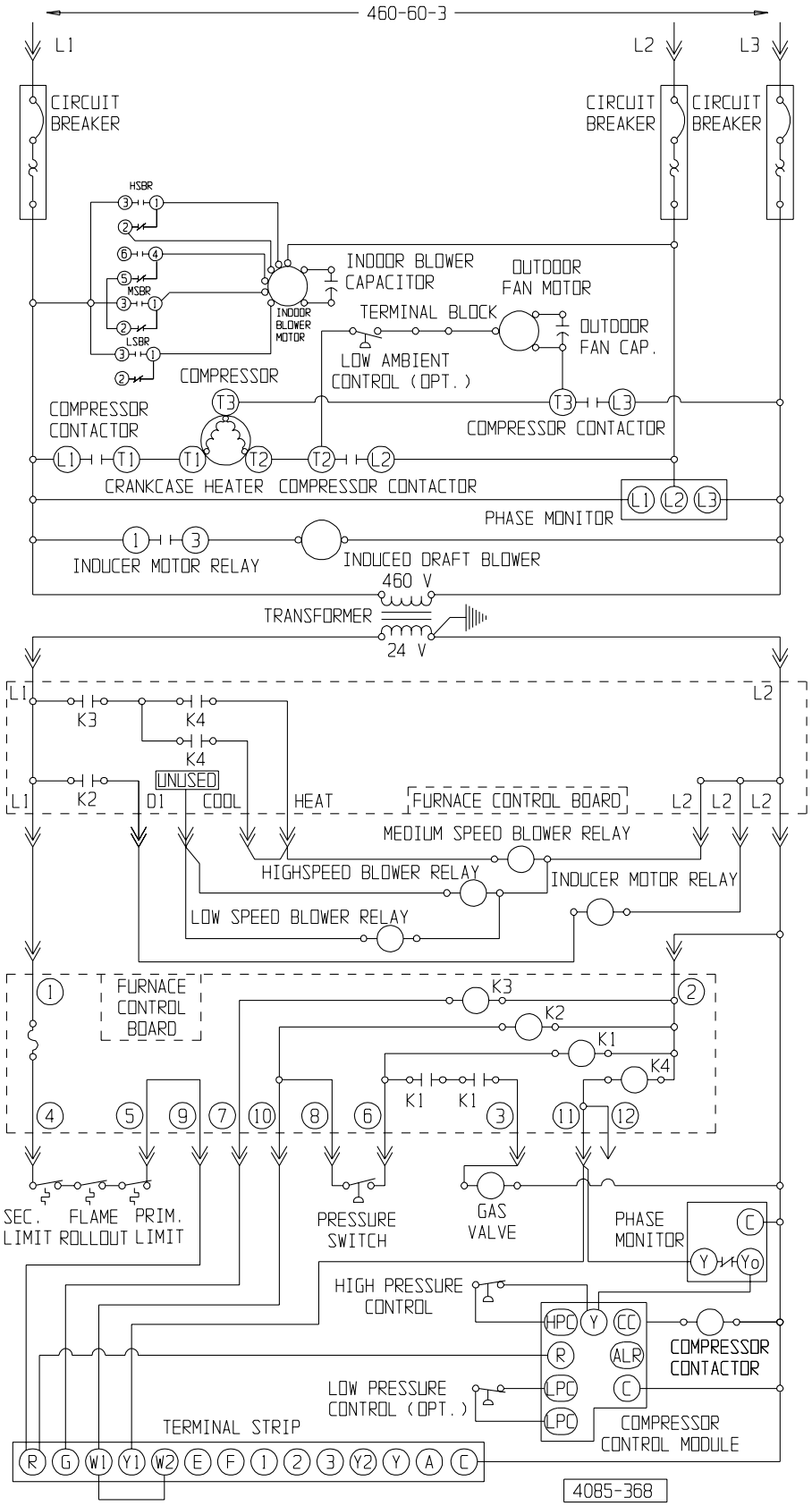

W30G1-C, W36G1-C, W42G1-C 460-60-3

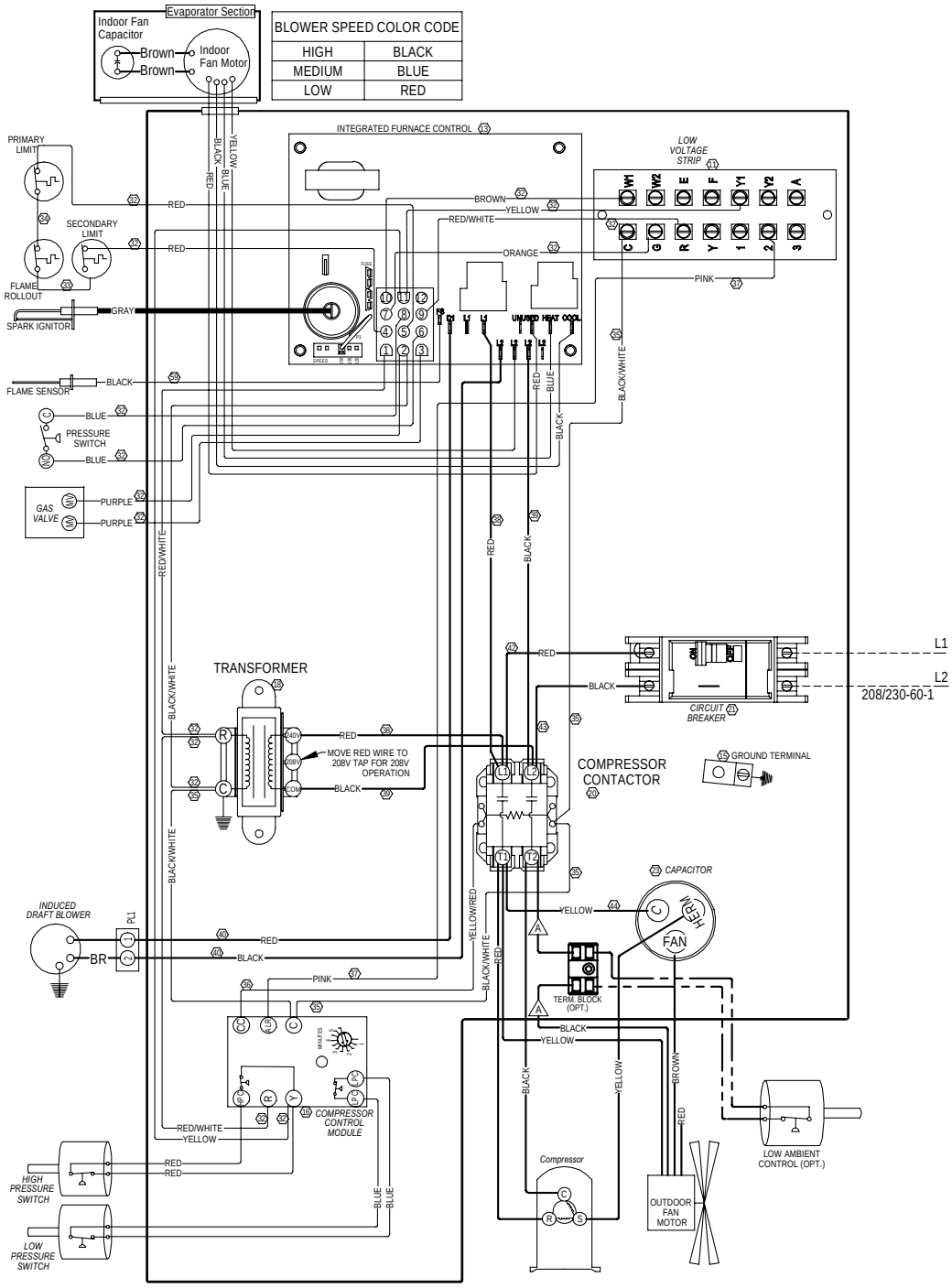

Model	C. Breaker	Capacitor
W48G1-A	50A	60+10/370
W60G1-A	60A	80+10/440

USE COPPER CONDUCTORS SUITABLE FOR AT LEAST 75° C

IF ANY ORIGINAL WIRE AS SUPPLIED WITH THE APPLIANCE MUST BE REPLACED, IT MUST BE REPLACED WITH WIRING MATERIAL HAVING A TEMPERATURE RATING OF AT LEAST 105° C EXCEPT THE IGNITION CABLE WHICH IS 250°C HIGH VOLTAGE CABLE

Wire Identification numbers for Bard use only.

	Factory	Field	Optional
High Voltage			
Low Voltage			

A WIRES CONNECT IF OPTION NOT USED

Bard Mfg. Co. Bryan, Ohio

4085-148 A

W48G1-A, W60G1-A 230/208-60-1

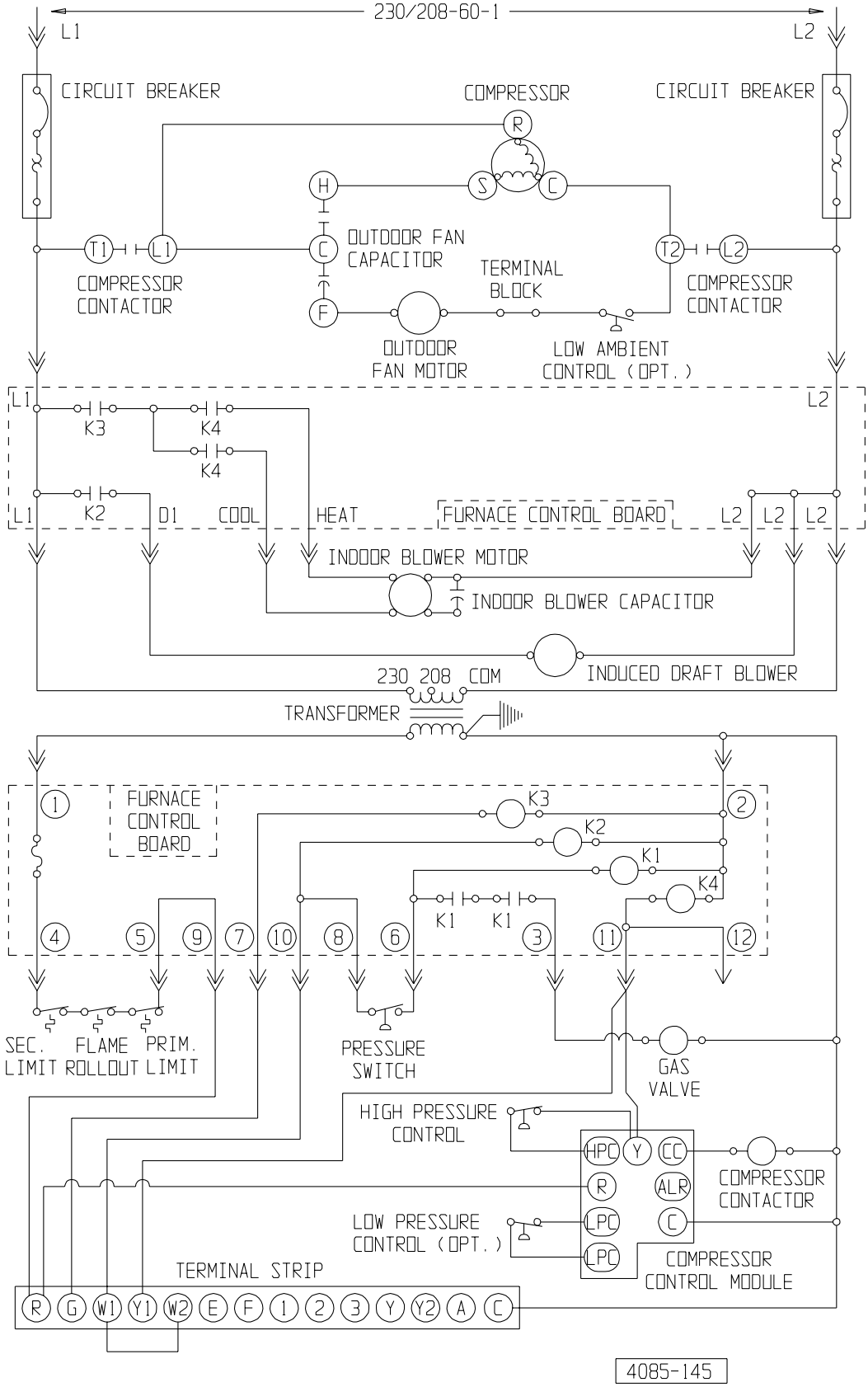

W48G1-A, W60G1-A 230/208-60-1

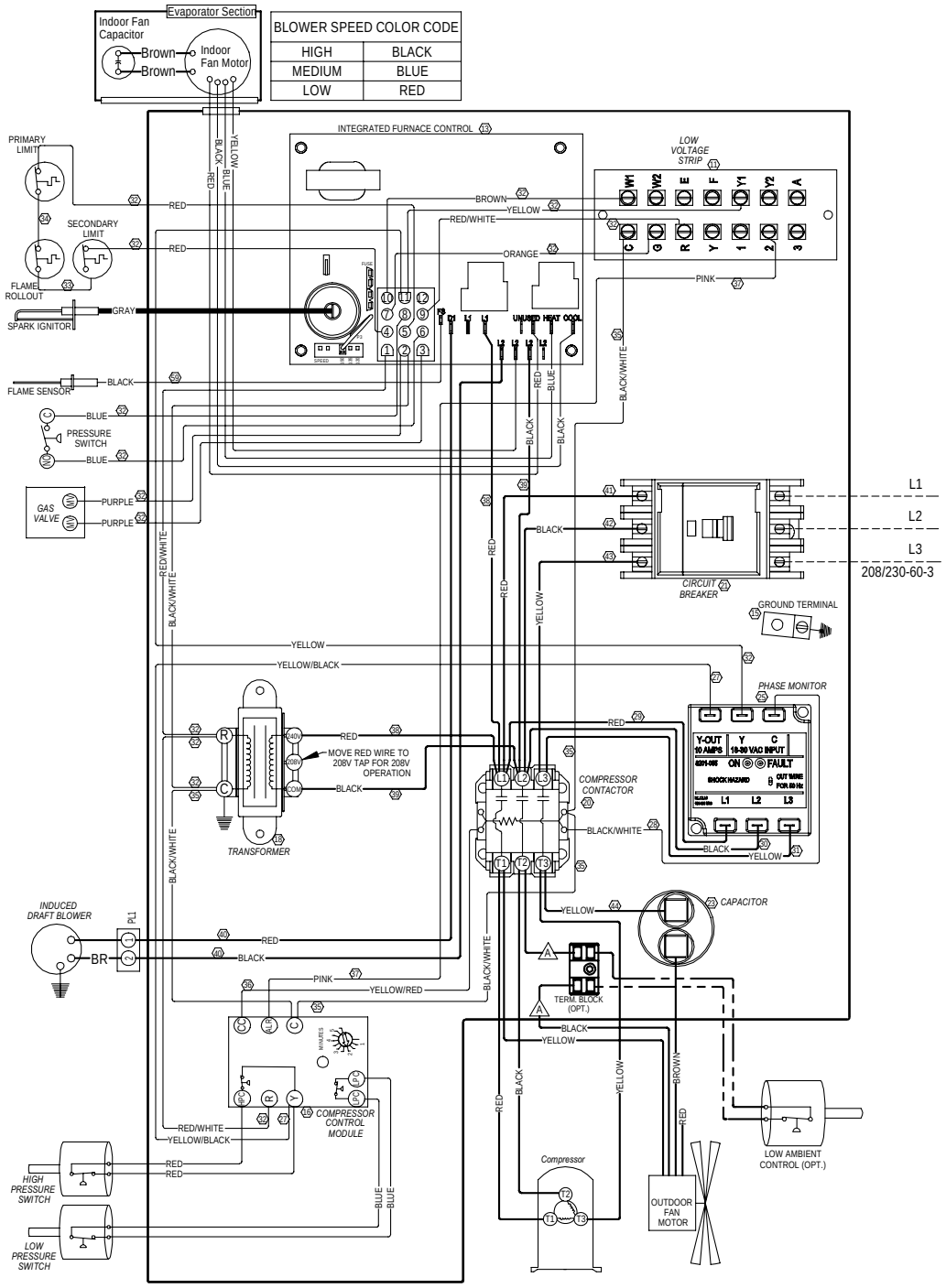

BLOWER SPEED COLOR CODE	
HIGH	BLACK
MEDIUM	BLUE
LOW	RED

Model	C. Breaker	Fan Capacitor
W48G1-B	35A	10/370
W60G1-B	40A	10/370

USE COPPER CONDUCTORS SUITABLE FOR AT LEAST 75° C

IF ANY ORIGINAL WIRE AS SUPPLIED WITH THE APPLIANCE MUST BE REPLACED, IT MUST BE REPLACED WITH WIRING MATERIAL HAVING A TEMPERATURE RATING OF AT LEAST 105° C EXCEPT THE IGNITION CABLE WHICH IS 250°C HIGH VOLTAGE CABLE

Wire Identification numbers for Bard use only.

	Factory	Field	Optional
High Voltage			
Low Voltage			

A WIRES CONNECT IF OPTION NOT USED

Bard Mfg. Co. Bryan, Ohio

4085-248 A

W48G1-B, W60G1-B 230/208-60-3

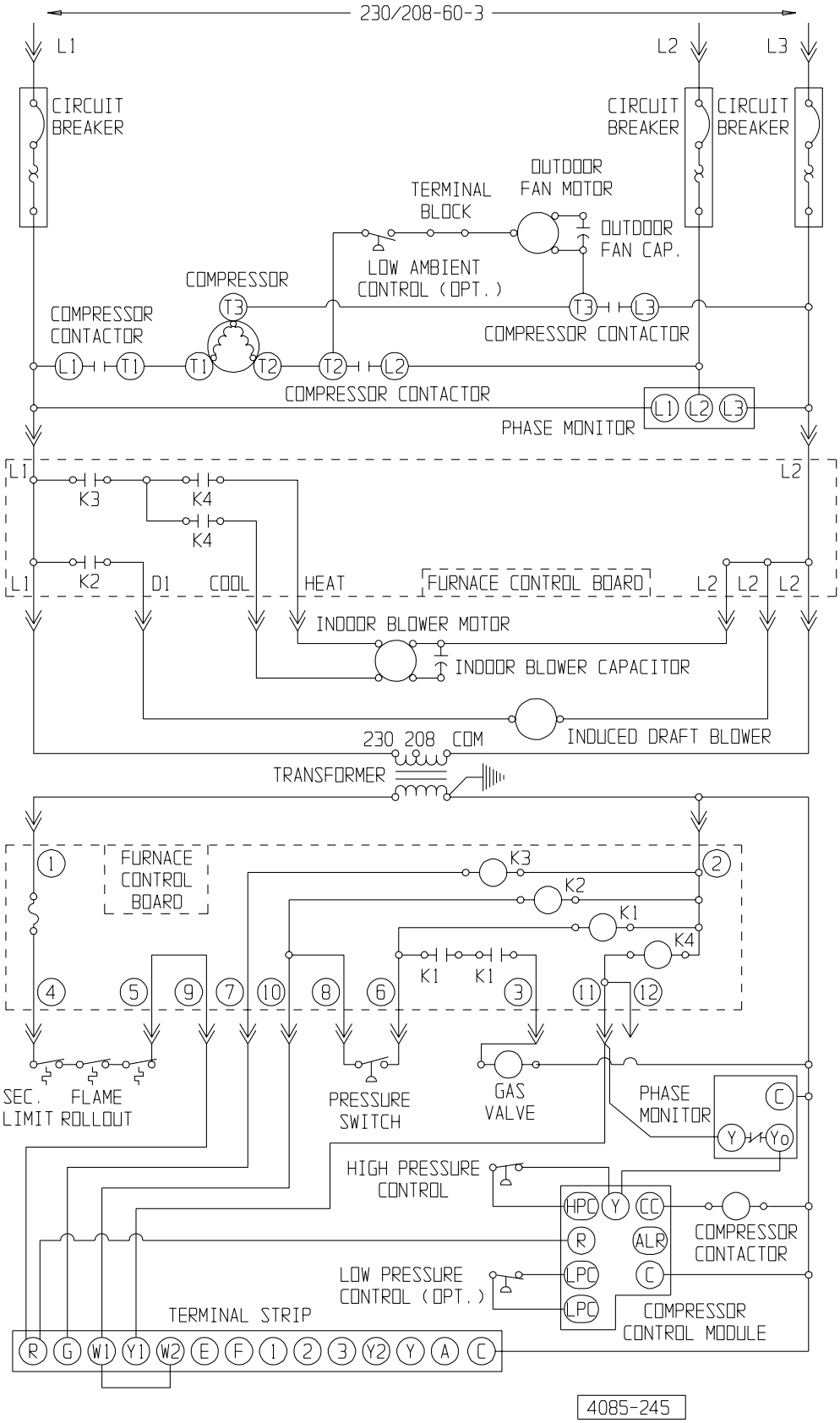

W48G1-B, W60G1-B 230/208-60-3

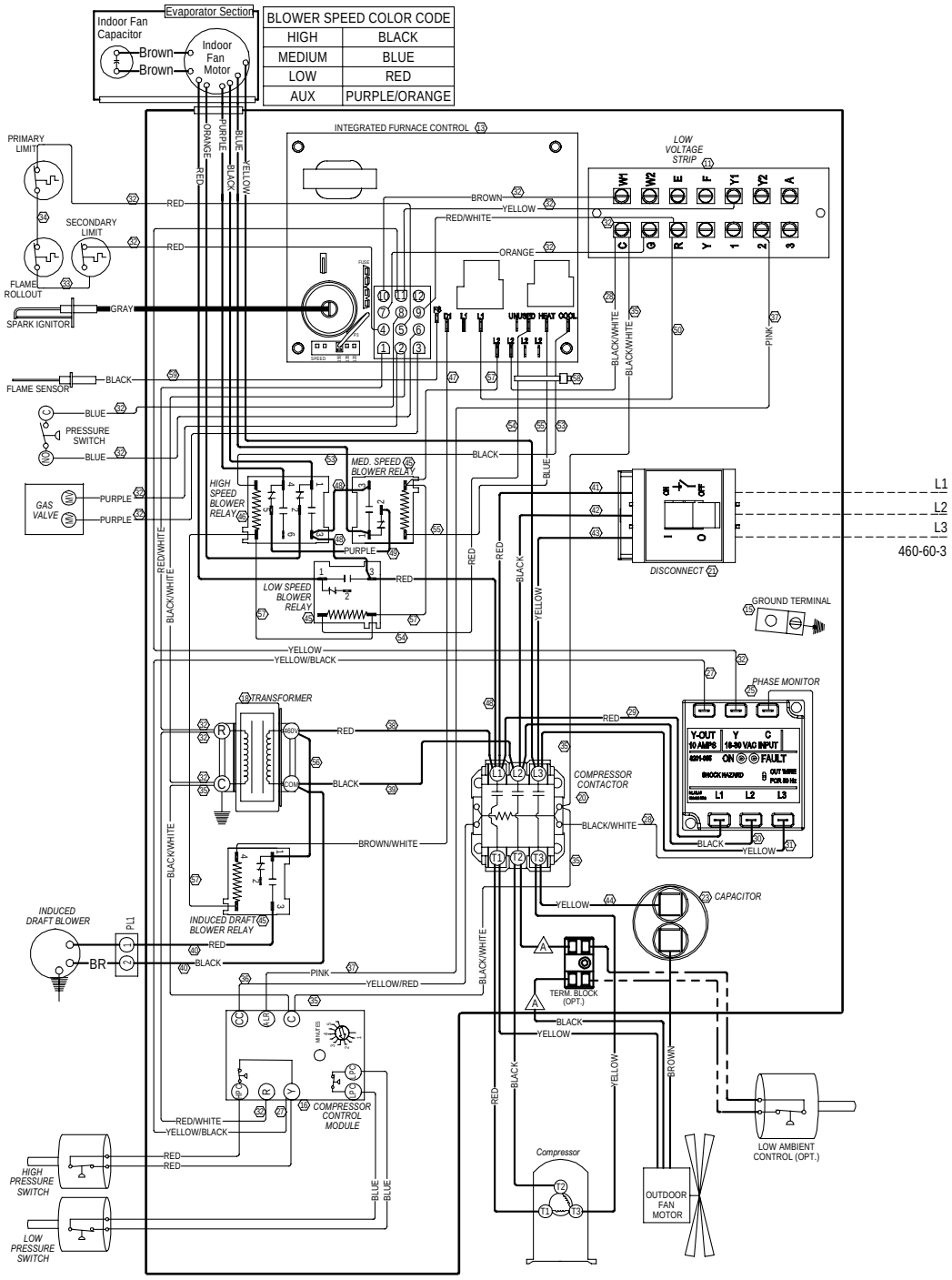

BLOWER SPEED COLOR CODE	
HIGH	BLACK
MEDIUM	BLUE
LOW	RED
AUX	PURPLE/ORANGE

Model	Fan Capacitor
W48C1-C	10/370
W60C1-C	15/370

USE COPPER CONDUCTORS SUITABLE FOR AT LEAST 75° C

IF ANY ORIGINAL WIRE AS SUPPLIED WITH THE APPLIANCE MUST BE REPLACED, IT MUST BE REPLACED WITH WIRING MATERIAL HAVING A TEMPERATURE RATING OF AT LEAST 105° C EXCEPT THE IGNITION CABLE WHICH IS 250°C HIGH VOLTAGE CABLE

Wire Identification numbers for Bard use only.

	Factory	Field	Optional
High Voltage			
Low Voltage			

A WIRES CONNECT IF OPTION NOT USED

Bard Mfg. Co. Bryan, Ohio

4085-369 B

W48G1-C, W60G1-C 460-60-3

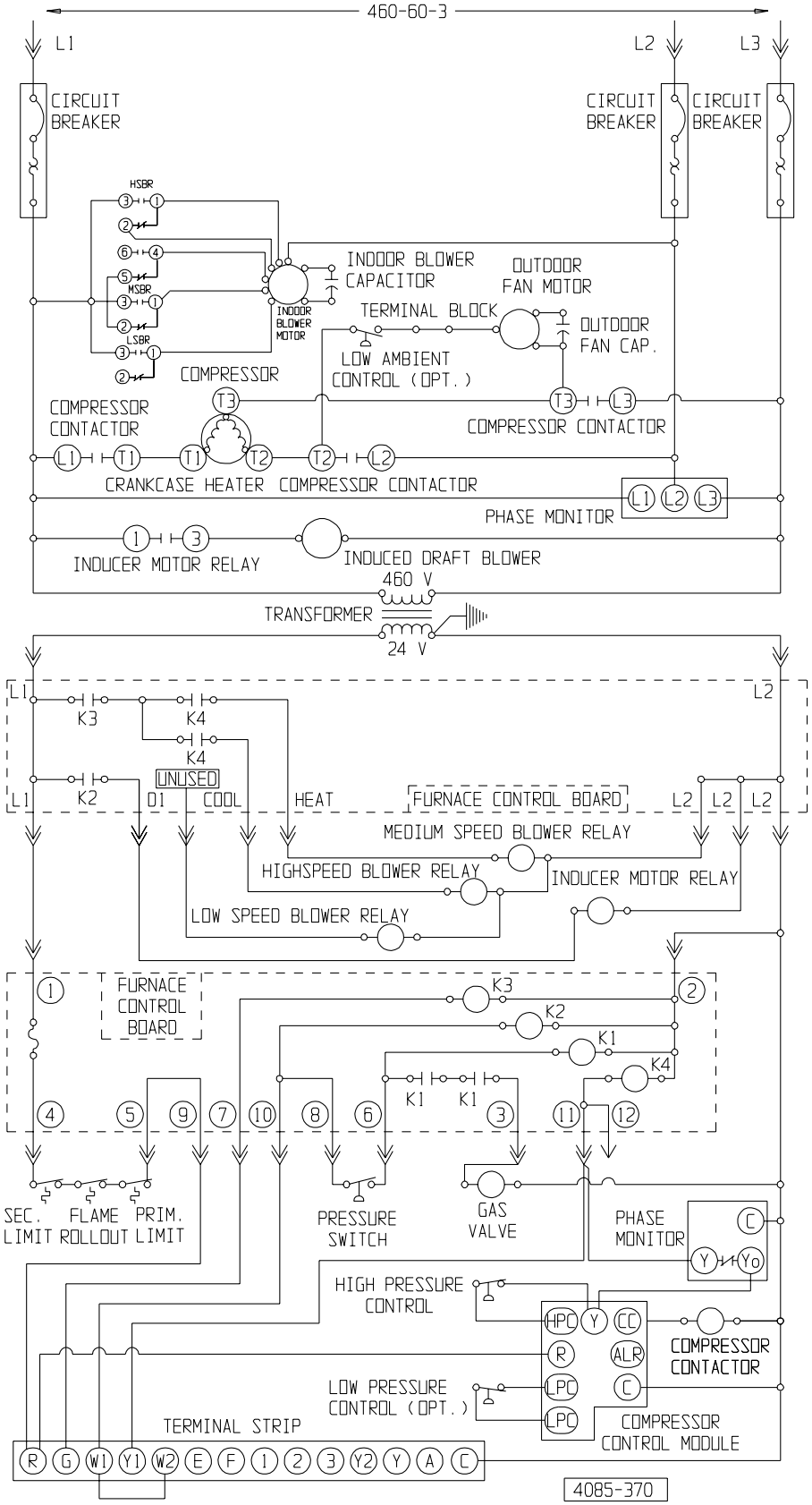

W48G1-C, W60G1-C 460-60-3