# INSTALLATION INSTRUCTIONS

# QW SERIES GEOTHERMAL R-410A STAGED CAPACITY PACKAGED HEAT PUMP

## Models:

## QW2S1 QW3S1 QW4S1 QW5S1

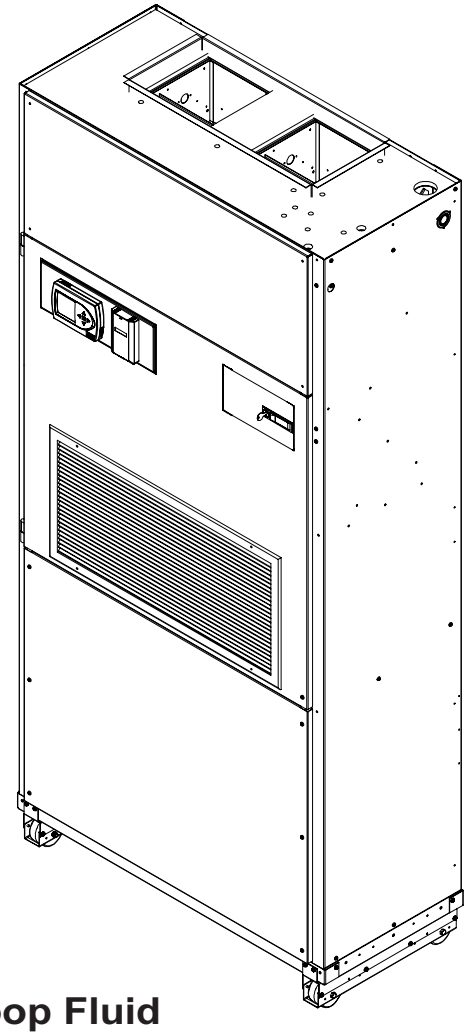

MIS-2736

**Earth Loop Fluid Temperatures 25 – 110**
**Ground Water Temperature 45 – 75**


Bard Manufacturing Company, Inc.
Bryan, Ohio 43506
*Since 1914...Moving ahead, just as planned.*

Manual No.: 2100-532D
Supersedes: 2100-532C
File: Vol II Tab 14
Date: 05-06-11

# CONTENTS

**Getting Other Information and Publications**
For more information, contact these publishers: ..... 4

**QW General Information**
QW Model Nomenclature ..... 5
Shipping Damage ..... 7
Unit Removal From Skid ..... 7
Handling Unit After Removal From Skid ..... 7
Removal of Wall Bracket from Shipping Location ... 8
General ..... 8
Minimum Installation Height ..... 8
Duct Work ..... 11
Filters ..... 11
Condensate Drain ..... 11 – 13
Mist Eliminator Service ..... 13 & 14

**Installation Instructions**
Mounting the Unit ..... 15
Wiring – Main Power ..... 18
Wiring – Low Voltage Wiring ..... 18
General ..... 18
Low Voltage Connections ..... 19

**Start Up**
Description of Standard Equipment ..... 24
Compressor Control Module ..... 24
Adjustments ..... 24
Optional CFM ..... 25
Important Installer Note ..... 25
Phase Monitor ..... 25
Service Hints ..... 25
Sequence of Operation ..... 25
Pressure Service Ports ..... 26
Piping Access to Unit ..... 26
Pressure Tables ..... 29
Optional Accessories ..... 30

**Closed Loop (Earth Coupled Ground Loop Applications)**
Circulation System Design ..... 31
Copper Water Coil Application ..... 31
Start Up Procedure for Closed Loop System ..... 32

**Open Loop (Well System Applications)**
Water Connections ..... 34
Well Pump Sizing ..... 35
Start Up Procedure for Open Loop System ..... 35
Water Corrosion ..... 36
Remedies of Water Problems ..... 36
Lake and Pond Installations ..... 37
Cooling Tower / Boiler Application ..... 39

**Service**
Unbrazing System Components ..... 42

**Troubleshooting GE ECM™ Blower Motors ...** 43-44

**Quick Reference Troubleshooting Chart for Water to Air Heat Pump ..... 45**

**Ground Source Heat Pump Performance Report ..... 46 & 47**

# CONTENTS

**Figures**


Figure 1 Unit Dimensions ..... 6
Figure 2 Removal of Unit From Skid ..... 7
Figure 3 Proper Handling of Unit After Removal from Skid ..... 8
Figure 4 Installation of Unit w/Wall Sleeve ..... 9
Figure 5 Installation With Free Blow Plenum ..... 10
Figure 6 Ducted Application ..... 10
Figure 7 Supply Duct Connections ..... 11
Figure 8A Condensate Drain ..... 12
Figure 8B Optional Rear Drain ..... 12
Figure 8C Rear Drain (Top View) ..... 13
Figure 9 Removal of Q-TEC ERV ..... 14
Figure 10 Remove Locking Screws from Wheels 15
Figure 11 Unit Mounting Without Wall Sleeve ..... 16
Figure 12 Component Location ..... 17
Figure 13 Low Voltage Wire Harness Plug ..... 19
Figure 14 Remote Thermostat Wiring "X" Option 20
Figure 15 Factory Mounted T-Stat Wiring "D" Option .. 21
Figure 16 Factory Mounted T-Stat Wiring "H" Option . 22
Figure 17 Remote Thermostat Wiring "K" Option .. 23
Figure 18 Fluid Connections w/Ventilation Wall Sleeve ..... 27
Figure 19 Fluid Connections w/o Ventilation Wall Sleeve ..... 28
Figure 20 Circulation System ..... 31
Figure 21 Water Temperature and Pressure Test Procedure ..... 32
Figure 22 Performance Model WGPM-1C ..... 33
Figure 23 Performance Model WGPM-2C ..... 33
Figure 24 Piping Diagram ..... 34
Figure 25 Cleaning Water Coil ..... 37
Figure 26 Water Well System ..... 38
Figure 27 Water Source H/P Cooling Cycle ..... 40
Figure 28 Water Source H/P Heating Cycle ..... 41
Figure 29 Control Disassembly ..... 44
Figure 30 Winding Test ..... 44
Figure 31 Drip Loop ..... 44


**Tables**


Table 1 Electrical Specifications ..... 5
Table 2 Operating Voltage Range ..... 18
Table 3 Wall Thermostats ..... 18
Table 4 Indoor Blower Performance ..... 26
Table 5 Pressures ..... 29
Table 6 Optional Accessories ..... 30
Table 7 Constant Flow Valves ..... 34
Table 8 Water Flow and Pressure Drop ..... 39

# GETTING OTHER INFORMATION AND PUBLICATIONS

These publications can help you install the air conditioner or heat pump. You can usually find these at your local library or purchase them directly from the publisher. Be sure to consult current edition of each standard.

National Electrical Code ..... ANSI/NFPA 70

Standard for the Installation ..... ANSI/NFPA 90A
of Air Conditioning and Ventilating Systems

Standard for Warm Air ..... ANSI/NFPA 90B
Heating and Air Conditioning Systems

Load Calculation for Residential ..... ACCA Manual J
Winter and Summer Air Conditioning

Duct Design for Residential ..... ACCA Manual D
Winter and Summer Air Conditioning and Equipment Selection

Closed-Loop/Ground Source Heat Pump ..... IGSHPA
Systems Installation Guide

Grouting Procedures for Ground-Source ..... IGSHPA
Heat Pump Systems

Soil and Rock Classification for the Design .... IGSHPA
of Ground-Coupled Heat Pump Systems

Ground Source Installation Standards ..... IGSHPA

Closed-Loop Geothermal Systems – Slinky .... IGSHPA
Installation Guide

## FOR MORE INFORMATION, CONTACT THESE PUBLISHERS:

**ACCA** **Air Conditioning Contractors of America**
1712 New Hampshire Avenue
Washington, DC 20009
Telephone: (202) 483-9370
Fax: (202) 234-4721

**ANSI** **American National Standards Institute**
11 West Street, 13th Floor
New York, NY 10036
Telephone: (212) 642-4900
Fax: (212) 302-1286

**ASHRAE** **American Society of Heating Refrigerating, and Air Conditioning Engineers, Inc.**
1791 Tullie Circle, N.E.
Atlanta, GA 30329-2305
Telephone: (404) 636-8400
Fax: (404) 321-5478

**NFPA** **National Fire Protection Association**
Batterymarch Park
P.O. Box 9101
Quincy, MA 02269-9901
Telephone: (800) 344-3555
Fax: (617) 984-7057

**IGSHPA** **International Ground Source Heat Pump Association**
490 Cordell South
Stillwater, OK 74078-8018

# QW SERIES GEOTHERMAL R-410A STAGED CAPACITY GENERAL INFORMATION

## QW MODEL NOMENCLATURE

**QW 3 S 1 - A 0Z B X 4 X C X**

**MODEL NUMBER**
Q-Tec™ Model

**CAPACITY**
2 - 2 Ton
3 - 3 Ton
4 - 4 Ton
5 - 5 Ton

**STEP CAPACITY**

**REVISION**

**SPECIALTY PRODUCTS**

**VOLTS & PHASE**
A - 230/208/60/1
B - 230/208/60/3
C - 460/60/3

**KW**
0Z - OKW

VENTILATION OPTIONS
B - Blank-off Plate
V - Commercial Room Ventilator w/Multi-Position Control. Can also be modulating with $CO_2$ control.
R - Energy Recovery Ventilator w/Independent Intake/Exhaust Control.

**FILTER OPTIONS**
X - 2-Inch Pleated (MERV6)

**COLOR**
4 - Buckeye Gray paint
X - Beige paint
V - Platinum w/Slate Front (Vinyl)

**CLIMATE CONTROL**
***Standard*** -
X - None
D - Electronic/Prog/Man/Auto
H - Electronic/Prog with $CO_2$ control

**COIL OPTIONS**
C - Copper (water)
N - Cupronickel

**INTERNAL CONTROLS**
X • High Pressure Switch
• Low Pressure Switch
• Compressor Control Module w/Time Delay
• Phase Monitor (3-PH)

### TABLE 1
### ELECTRICAL SPECIFICATIONS

| MODEL | RATED VOLTS, Hz & PHASE | SINGLE CIRCUIT | | |
|---|---|---|---|---|
| | | ② NO. FIELD POWER CIRCUITS | ① MINIMUM CIRCUIT AMPACITY | ① MAXIMUM EXTERNAL FUSE OR CIRCUIT BREAKER |
| QW2S1-A0Z | 230/208-60-1 | 1 | 19 | 30 |
| QW2S1-B0Z | 230/208-60-3 | 1 | 14 | 20 |
| QW2S1-C0Z | 460-60-3 | 1 | 7 | 15 |
| QW3S1-A0Z | 230/208-60-1 | 1 | 26 | 40 |
| QW3S1-B0Z | 230/208-60-3 | 1 | 20 | 30 |
| QW3S1-C0Z | 460-60-3 | 1 | 9 | 15 |
| QW4S1-A0Z | 230/208-60-1 | 1 | 31 | 50 |
| QW4S1-B0Z | 230/208-60-3 | 1 | 27 | 40 |
| QW4S1-C0Z | 460-60-3 | 1 | 11 | 20 |
| QW5S1-A0Z | 230/208-60-1 | 1 | 39 | 60 |
| QW5S1-B0Z | 230/208-60-3 | 1 | 29 | 45 |
| QW5S1-C0Z | 460-60-3 | 1 | 17 | 25 |

① Maximum size of the time delay fuse or HACR type circuit breaker for protection of field wiring conductors.
② These "Minimum Circuit Ampacity" values are to be used for sizing the field power conductors. Refer to the National Electric Code (latest revision), article 310 for power conductor sizing.

**CAUTION:** When more than one field power conductor circuit is run through one conduit, the conductors must be derated. Pay special attention to Note 8 of Table 310 regarding Ampacity Adjustment Factors when more than three conductors are in a raceway.

## FIGURE 1
## UNIT DIMENSIONS

| UNIT | DIM. "A" | DIM. "B" | DIM. "C" | DIM. "D" |
|---|---|---|---|---|
| QW2S, QW3S | 8 5/8" | 42" | 30" | 43" |
| QW4S, QW5S | 8 3/4" | 48" | 40" | 49" |

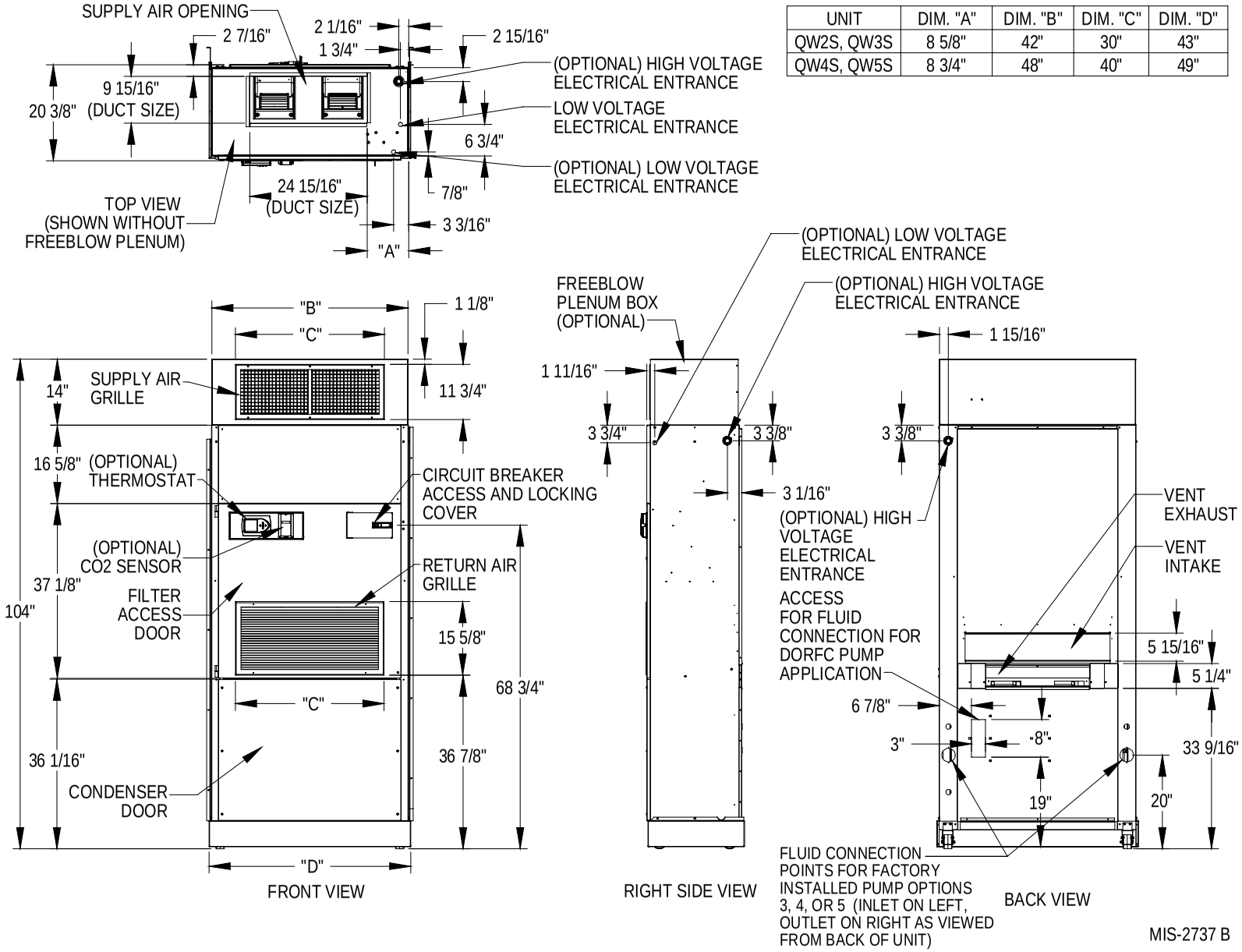

## SHIPPING DAMAGE

Upon receipt of equipment, the carton should be checked for external signs of shipping damage. The skid must remain attached to the unit until the unit is ready for installation. If damage is found, the receiving party must contact the last carrier immediately, preferably in writing, requesting inspection by the carrier's agent.

## UNIT REMOVAL FROM SKID

**⚠ WARNING**

This unit is heavy and requires more than one person to handle and remove from the skid. Check unit wheels to ensure that wheels are locked before removing from skid. Extreme caution must be taken to prevent injury to personnel and damage to the unit.

It is recommended that the unit not be removed from the skid with a forklift.

The shipping brackets on each side of the unit must be removed and discarded. See Figure 2-A. The return air grille panel can be removed to provide a place to hold the unit. The unit can be slid forward on the skid until the front wheels hang over the edge of the skid. See Figure 2-B. The unit can be tipped forward and slid down the edge of the skid until the front wheels touch the ground. See Figure 2-C. The wheels will not roll. They are shipped from the factory locked so they will not roll. The back of the skid will have to be held down to keep it from tipping up. The skid can be slid out from under the unit. The unit can then be set upright.

## HANDLING UNIT AFTER REMOVAL FROM SKID

**⚠ WARNING**

Exercise extreme caution when pushing the unit on the rollers. Handle and push from the lower 1/3 of the unit. Insure that debris is not on the floor where the unit is to be moved on the rollers. Failure to do so could result in the unit tipping over and causing bodily injury and/or damage to the unit.

The unit will have to be turned sideways and removed from the skid to fit through a 36" doorway. If the door height allows, the unit can be slid sideways through the door.

If the unit can not be slid through the door, then the unit will have to be put on a cart and tipped down to roll through the door. It is recommended that an appliance cart be used with a strap to hold the unit on the cart. The wheels of the unit ***must be locked***. If the wheels were allowed to roll, the unit could roll off the cart. ***The unit should always be carted from the left side.*** This is the side where the compressor is located. See Figure 3. The blade of the appliance cart should be slid under the wheels of the unit. The strap of the appliance cart should be placed around the unit and strapped tightly. Help will be required to tip the unit back onto the cart. The unit can be leaned far enough back to be rolled through the door. Be careful when setting the unit back up to keep from damaging the unit.

**FIGURE 2**
**REMOVAL OF UNIT FROM SKID**

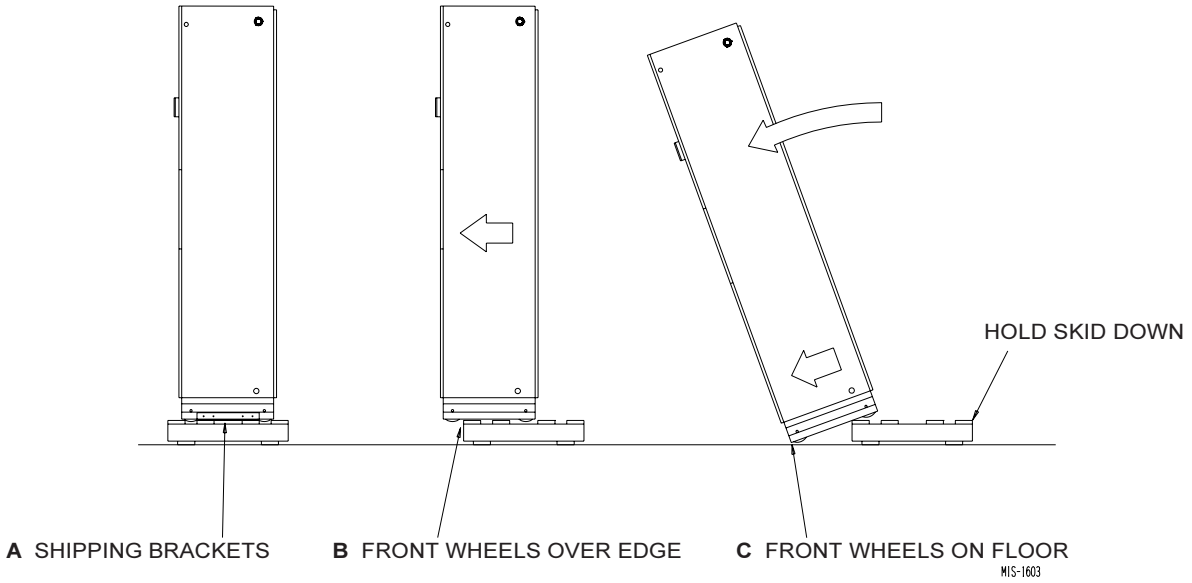

**FIGURE 3**
**PROPER HANDLING OF UNIT**
**AFTER REMOVAL FROM SKID**

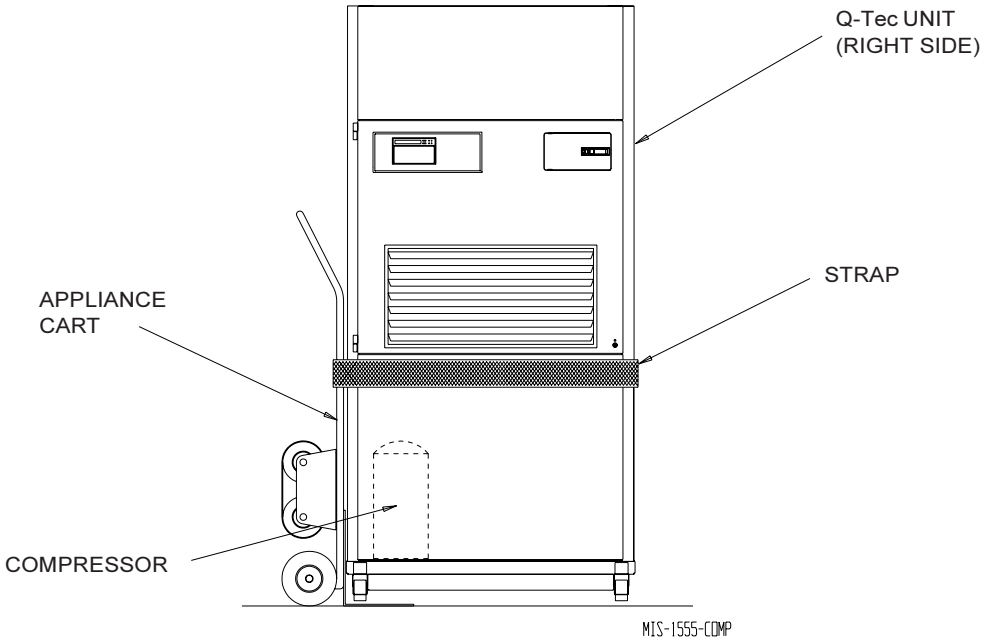


## REMOVAL OF WALL BRACKET FROM SHIPPING LOCATION (UNITS WITH BLANK OFF PLATE ONLY)

The wall brackets are attached to the back of the unit. Remove and retain the wall brackets for use when attaching the unit to the wall. In units equipped with a ventilator a wall sleeve is required and these two wall brackets are not included. A different style bracket is supplied with the sleeve assembly.

## GENERAL

The equipment covered in this manual is to be installed by trained, experienced service and installation technicians.

The unit is designed for use with or without duct work. For use without duct work, Plenum Box QPB** is recommended.

These instructions explain the recommended method to install the water source self-contained unit and the electrical wiring connections to the unit.

These instructions and any instructions packaged with any separate equipment required to make up the entire air conditioning system should be carefully read before beginning the installation. Note particularly “Start Procedure” and any tags and/or labels attached to the equipment.

While these instructions are intended as a general recommended guide, they do not supersede any national and/or local codes in any way. Authorities having jurisdiction should be consulted before the installation is made. See Page 4 for information on codes and standards.

Size of unit for a proposed installation should be based on heat loss calculation made according to methods of Air Conditioning Contractors of America (ACCA). The air duct should be installed in accordance with the Standards of the National Fire Protection Systems of Other Than Residence Type, NFPA No. 90A, and Residence Type Warm Air Heating and Air Conditioning Systems, NFPA No. 90B. Where local regulations are at a variance with instructions, installer should adhere to local codes.

## MINIMUM INSTALLATION HEIGHT

The minimum installation height of the unit with a Free Blow Plenum is 8 ft. 9 in. This provides enough clearance for the plenum to be removed. See Figure 5.

The minimum installation height for ducted applications is 8 ft. 9 in. This provides enough clearance to install the duct work. See Figure 6.

**FIGURE 4**
**INSTALLATION OF UNIT THROUGH WALL WITH WALL SLEEVE**

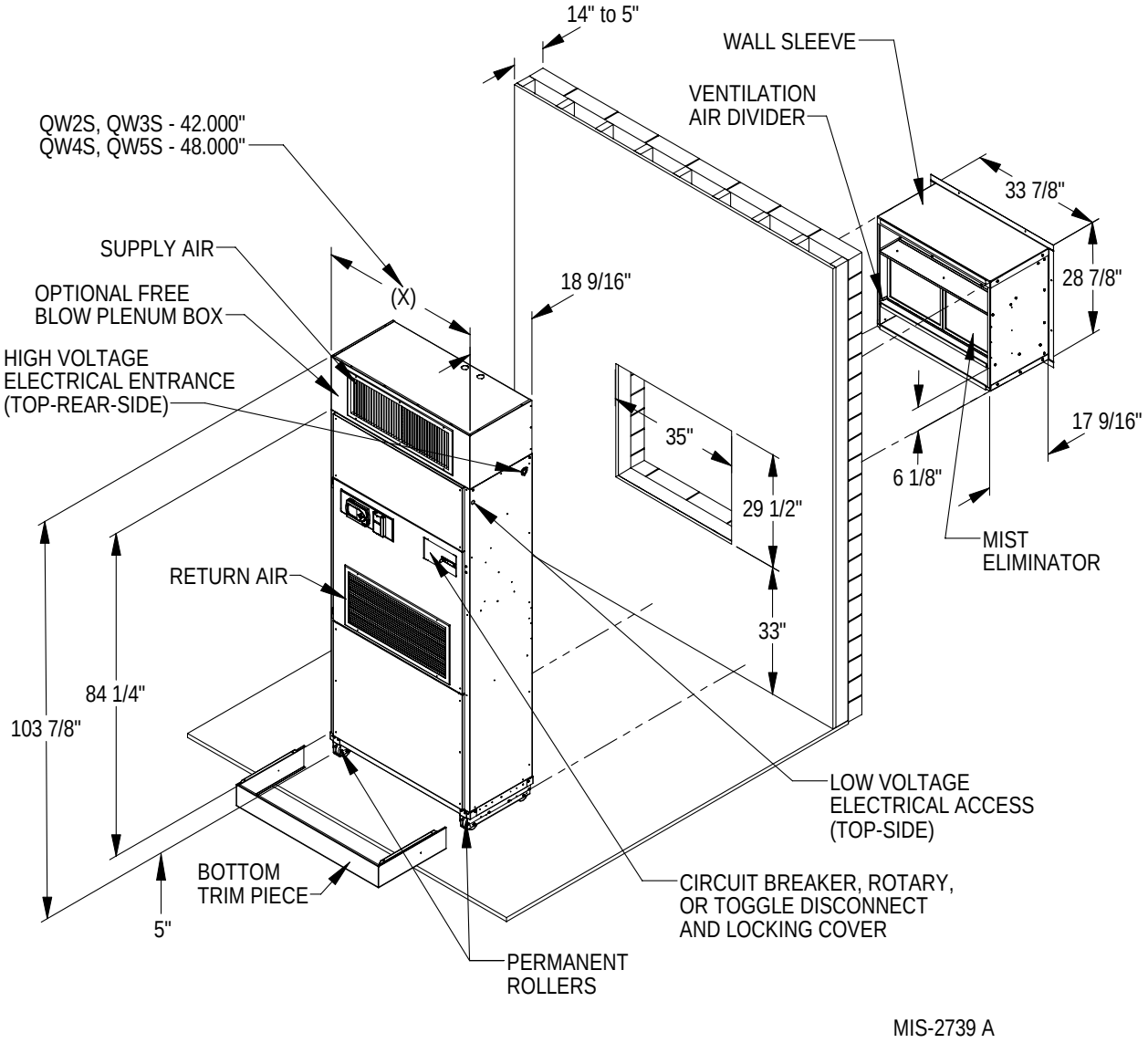

## FIGURE 5
## INSTALLATION WITH FREE BLOW PLENUM

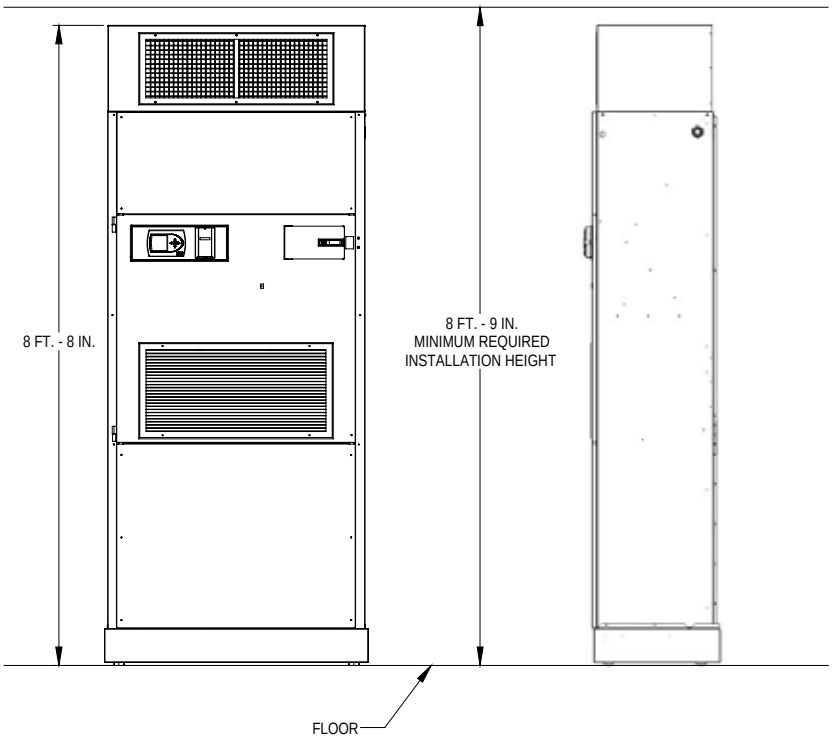


MIS-2740

## FIGURE 6
## DUCTED APPLICATION

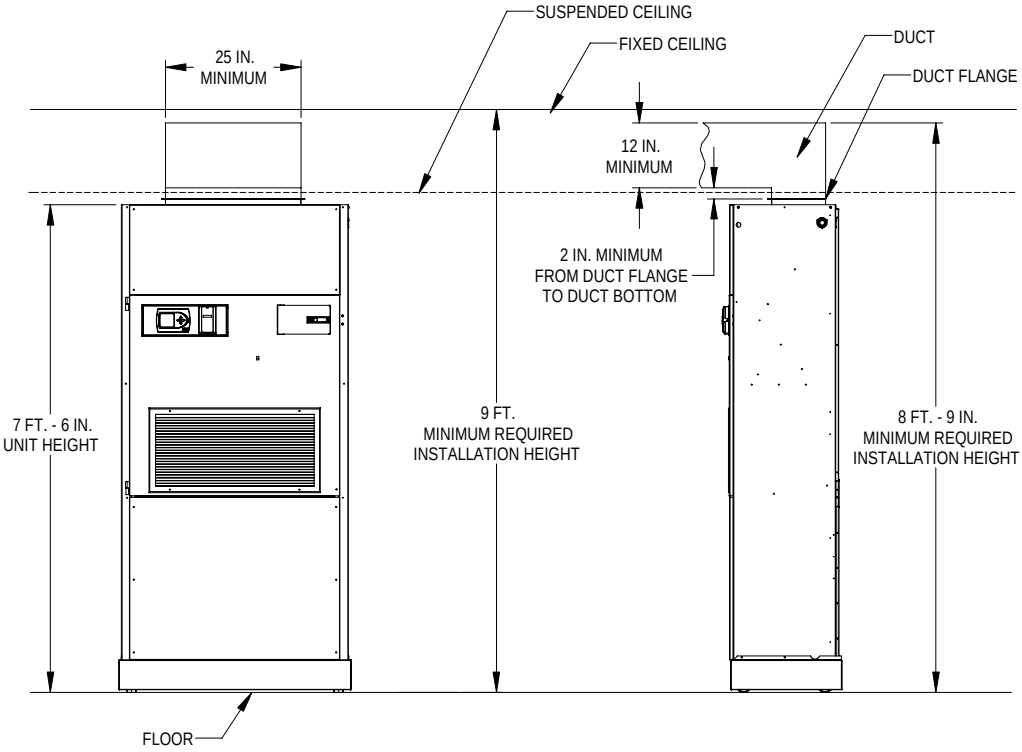


MIS-2741

## DUCT WORK

Any heat pump is more critical of proper operating charge and an adequate duct system than a straight air conditioning unit. All duct work must be properly sized for the design airflow requirement of the equipment. Air Conditioning Contractors of America (ACCA) is an excellent guide to proper sizing. All duct work or portions thereof not in the conditioned space should be properly insulated in order to both conserve energy and prevent condensation or moisture damage. When duct runs through unheated spaces, it should be insulated with a minimum of one inch of insulation. Use insulation with a vapor barrier on the outside of the insulation. Flexible joints should be used to connect the duct work to the equipment in order to keep the noise transmission to a minimum.

The Q-Tec Series heat pump has provision to attach a supply air duct to the top of the unit. Duct connection size is 12 inches x 20 inches. The duct work is field supplied and must be attached in a manner to allow for ease of removal when it becomes necessary to slide the unit out from the wall for service. See Figure 7 for suggested attachment method.

*NOTE: Unit cabinet, supply air duct and free blow plenum are approved for "0" clearance to combustible material.*

The Q-Tec Series heat pumps are designed for use with free return (non-ducted) and either free blow with the use of QPB Plenum Box or a duct supply air system.

The QPB Plenum Box mounts on top of the unit and has both vertically and horizontally adjustable louvers on the front discharge grille.

**FIGURE 7**
**SUPPLY DUCT CONNECTIONS**

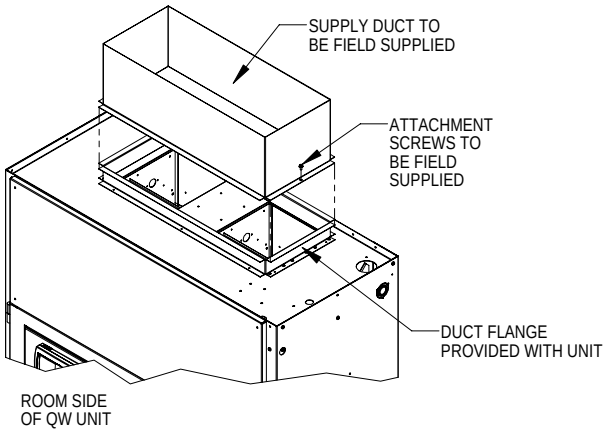


MIS-2742

When used with a ducted supply, a QCX Cabinet Extension can be used to conceal the duct work above the unit to the ceiling. This extends 20" above the unit for a total height above the floor of 10'-7/8". The unit is equipped with a variable speed indoor blower motor which increases in speed with an increase in duct static pressure. The unit will therefore deliver proper rated airflow up to the Maximum ESP shown in Table 4. However, for quiet operation of the air system, the duct static should be kept as low as practical, within the guidelines of good duct design.

## FILTERS

Two 2-inch pleated filters are supplied with each unit. The filters fit into a fixed rack.

The filters are serviced from the inside of the building . To gain access to the filters release the latch on the circuit breaker door and one 1/4 turn fastener near the bottom of the door. This door is hinged on the left so it will swing open.

The internal filter brackets are adjustable to accommodate 1-inch filters. The tabs for the 1-inch filters must be bent up to allow the 1-inch filters to slide in place.

## CONDENSATE DRAIN

The condensate drain hose is routed down from the evaporator drain pan on the right side of the unit into the compressor compartment. There are three locations that the drain can exit the cabinet.

If the drain is to be hard plumbed, there is a 3/4 inch FPT pipe connection located on the cabinet rear panel. In these installations, the drain tube is to be slipped over the pipe connection inside of the cabinet; this is how it is shipped from the factory. (See Figure 8C.)

For a stand pipe type of drain, the drain hose can exit the rear of the cabinet. There is adequate hose length to reach the floor on the right hand side of the unit. (See Figure 8A.)

*NOTE: Whichever type of drain connection is used a "P" trap must be formed. See Figure 8A.*

**FIGURE 8A**
**CONDENSATE DRAIN**

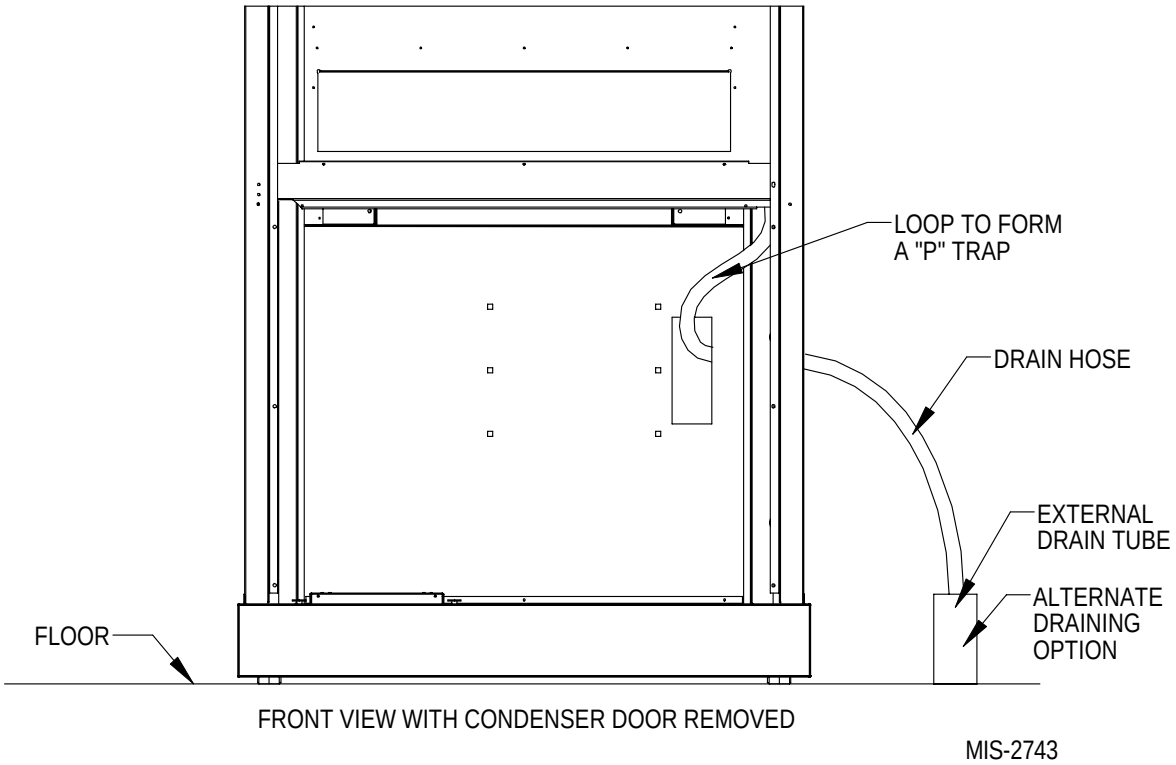


The drain can be routed through the floor or through the wall. ***If the drain is to be routed through an unconditioned space, it must be protected from freezing***. The drain line must be able to be removed from the unit if it is necessary to remove the unit from the wall.

**FIGURE 8B**
**OPTIONAL REAR DRAIN**

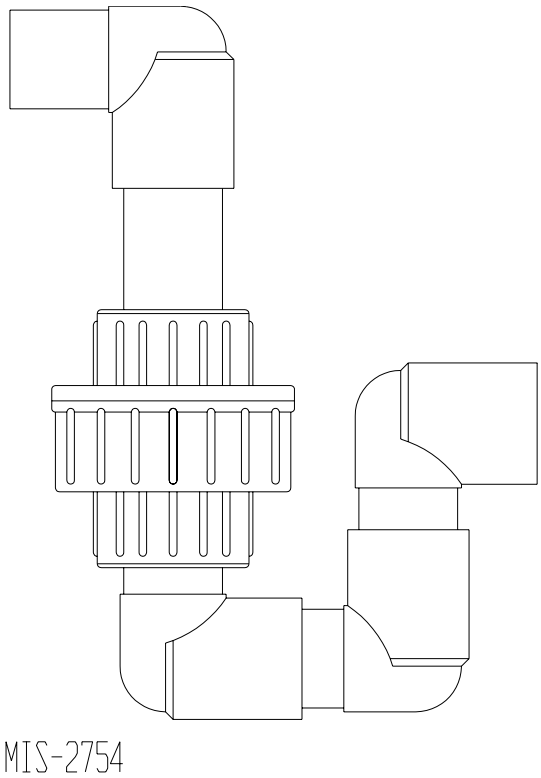

The ***rear drain*** can be used with wall thickness of up to 10 inches where a water trap can be installed between the unit and the interior wall. See Figure 8B. The trap cannot extend beyond the edge of the unit or it will interfere with the wall mounting bracket. The drain can be routed through the floor or through the wall. If the drain is routed through the wall, the drain line must be positioned such that it will not interfere with the sleeve flange or the grille. See Figure 8C. ***If the drain is to be routed through an unconditioned space, it must be protected from freezing.***

**FIGURE 8C**
**REAR DRAIN (TOP VIEW)**

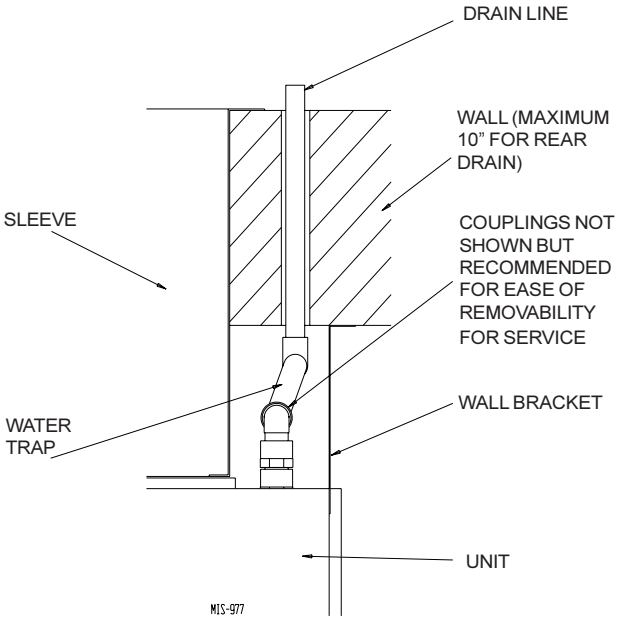


## MIST ELIMINATOR SERVICE (Optional – only used with one of the vent options)

A mist eliminator is supplied with the wall sleeve. The mist eliminator is constructed of aluminum frame and mesh. The mist eliminator is located in the top section of the wall sleeve and can be removed from the inside of the building without removing the unit from the wall. This requires that the ventilation package must be removed.

The steps necessary to remove each of the vent options are listed following.

It is recommended that the mist eliminator be inspected annually and serviced as required. The mist eliminator can be inspected from the outside of the building by looking through the outdoor grille. The mist eliminator can be serviced from the outside. The outdoor grille must be removed to do so.

The mist eliminator can be cleaned by washing with soap and water. The excess water should be shaken off the mist eliminator before it is reinstalled.

### COMMERCIAL ROOM VENTILATOR OPTION

Before starting the removal make sure the power has been turned off. The hinged return air grille panel must be opened. The commercial room ventilator (CRV) can be seen after the panel has been removed. The CRV must be removed to gain access to the mist eliminator.

1. The two mounting screws in the front of the CRV must be removed.
2. The power connectors for the CRV (located on the right side of the unit) must be disconnected. Squeeze the tabs on the sides of the connector and pull straight out. Unplug both of the connectors.
3. Slide the CRV straight out of the unit.

The mist eliminator can be seen through the opening in the back of the unit. The mist eliminator must be raised up and the bottom can be pulled toward the front of the unit and removed.

## Q-TEC ENERGY RECOVERY VENTILATOR OPTION

Before starting the removal make sure that the power has been turned off. The hinged return air grille panel must be opened. The energy recovery ventilator (QERV) can be seen after the panel is opened. To gain access to the mist eliminator, the QERV must be removed. Refer to Figure 9.

1. The front fill plate of the QERV must be removed. There is one screw on either side of the plate. Remove these screws and remove the plate.
2. On either side of the QERV there are mounting screws that hold the QERV in place. Remove both of these screws.
3. Underneath the heat recovery cassette there is a power connector for the lower blower assembly. To disconnect this plug, the tabs on both sides of the plug must be squeezed to release the plug. While squeezing the tabs, pull the plug out of the socket.
4. The QERV is plugged into the unit on the right side of the unit. Both of these plugs must be disconnected to remove the QERV. Squeeze the tabs on the sides of the connector and pull straight out.
5. Slide the QERV assembly straight out of the unit being careful not to let the cassette slide out of the QERV.

The mist eliminator can be seen through the opening in the back of the unit. The mist eliminator must be raised up and the bottom can be pulled toward the front of the unit and removed.

**FIGURE 9**
**REMOVAL OF THE Q-TEC ENERGY RECOVERY VENTILATOR**

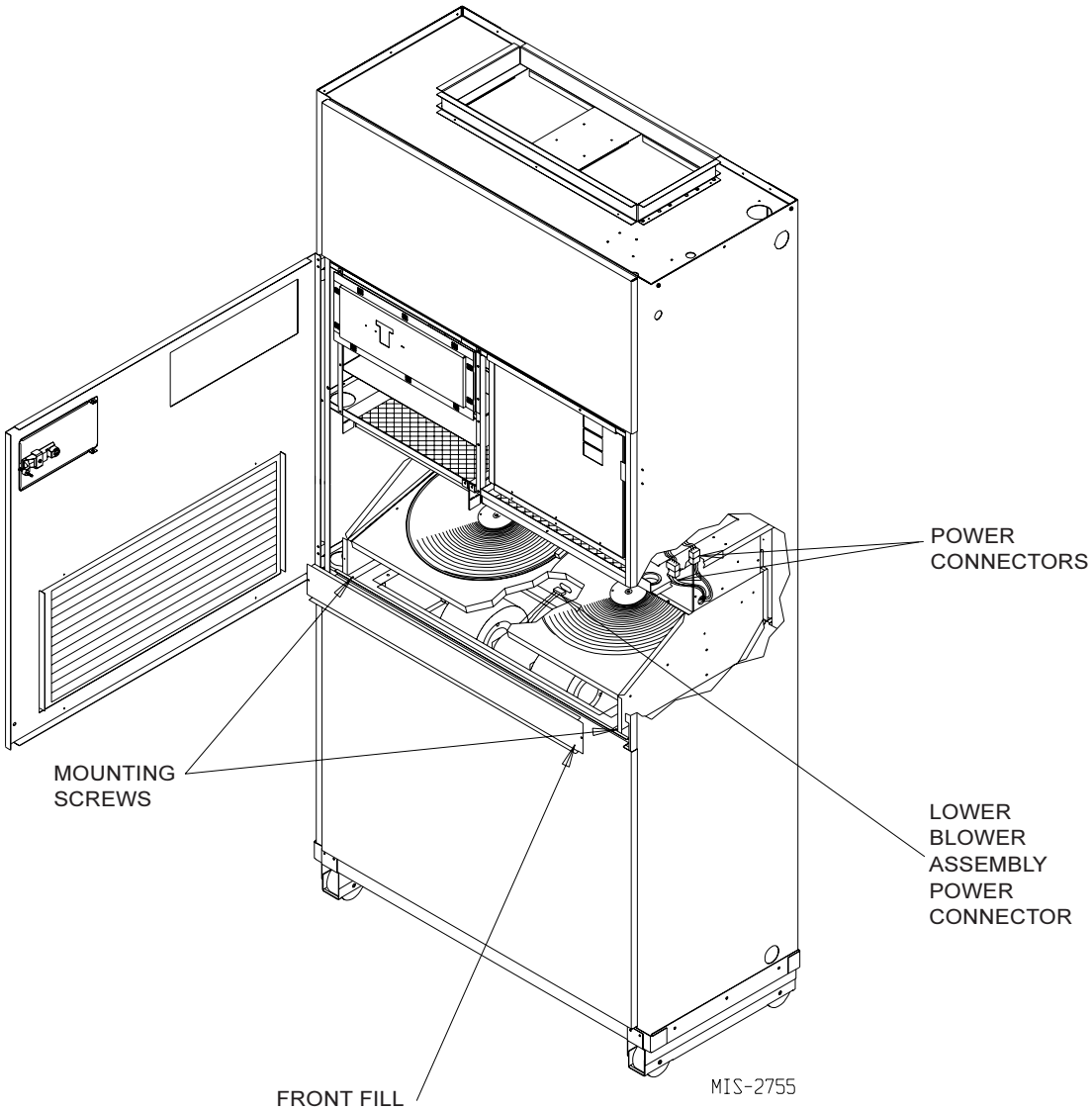

## MOUNTING THE UNIT

When installing a QW unit near an interior wall on the left side, a minimum of 8 inches is required; 12 inches is preferred.

When installing a QW unit near an interior wall on the right side, a minimum of 12 inches is required as additional space is required to connect the drain.

This clearance is required to allow for the attachment of the unit to the wall mounting brackets and the side trim pieces to the wall.

This unit is to be secured to the wall when there is not a vent sleeve used with the wall mounting brackets provided. *(NOTE: Wall mounting brackets are only shipped on units with no vent inside.)* The unit itself, the supply duct, and the free blow plenum are suitable for "0" clearance to combustible material.

*NOTE: When a wall sleeve is to be used attach the unit to the sleeve with bracket supplied with the wall sleeve.*

Following are the steps for mounting the QW units. For reference see Figure 11.

1. Attach wall mounting bracket to the structure wall with field supplied lag bolts. The fluid piping connections are to be within the confines of this bracket. See Figure 1 for cabinet openings and location of fluid coil connection points.
2. Position the unit in front of the wall mounting bracket.
3. Remove the locking screws from the wheels. Refer to Figure 10.
4. Roll the unit up to the wall mounting bracket. The unit must be level from side to side. If any adjustments are necessary, shim up under the rollers with sheets of steel or any substance that is not affected by moisture.
5. Secure the unit to the wall bracket with provided #10 hex head sheet metal screws. There are prepunched holes in the cabinet sides, and the bracket has slotted holes to allow for some misalignment.
6. Position the bottom trim piece to the unit and attach with provided screws (dark colored).
7. Position side trim pieces to the wall and attach with field supplied screws. There are two long and two short pieces supplied. The long pieces are to enclose the gap behind the unit. The short pieces are to fill the gap behind the cabinet extension or the free blow plenum box. They may be cut to suit the ceiling height or overlap the unit side trim. There is sufficient length to trim up to a 10'2" ceiling.

**FIGURE 10**
**REMOVING LOCKING SCREWS FROM WHEELS**

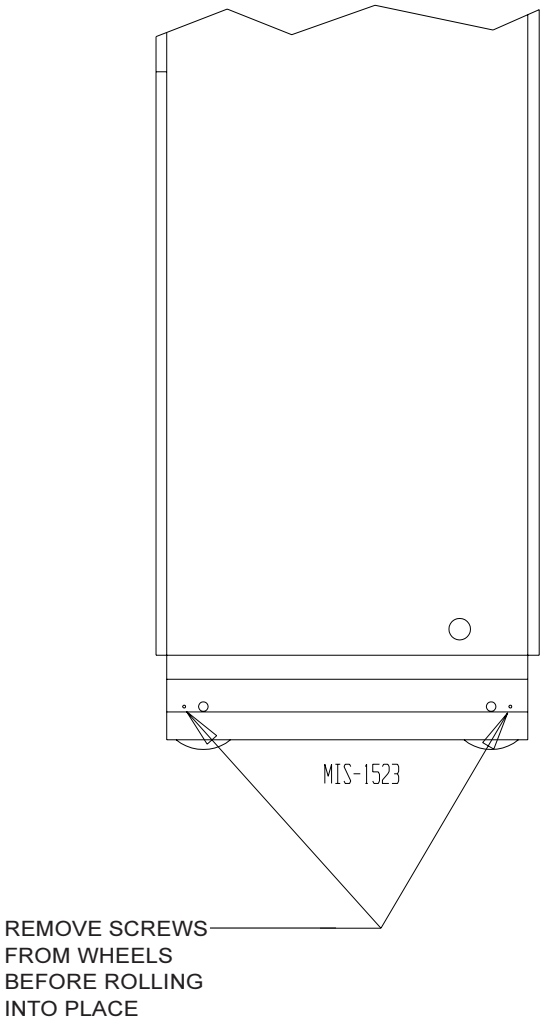

**FIGURE 11**
**UNIT MOUNTING WITHOUT VENTILATION WALL SLEEVE**

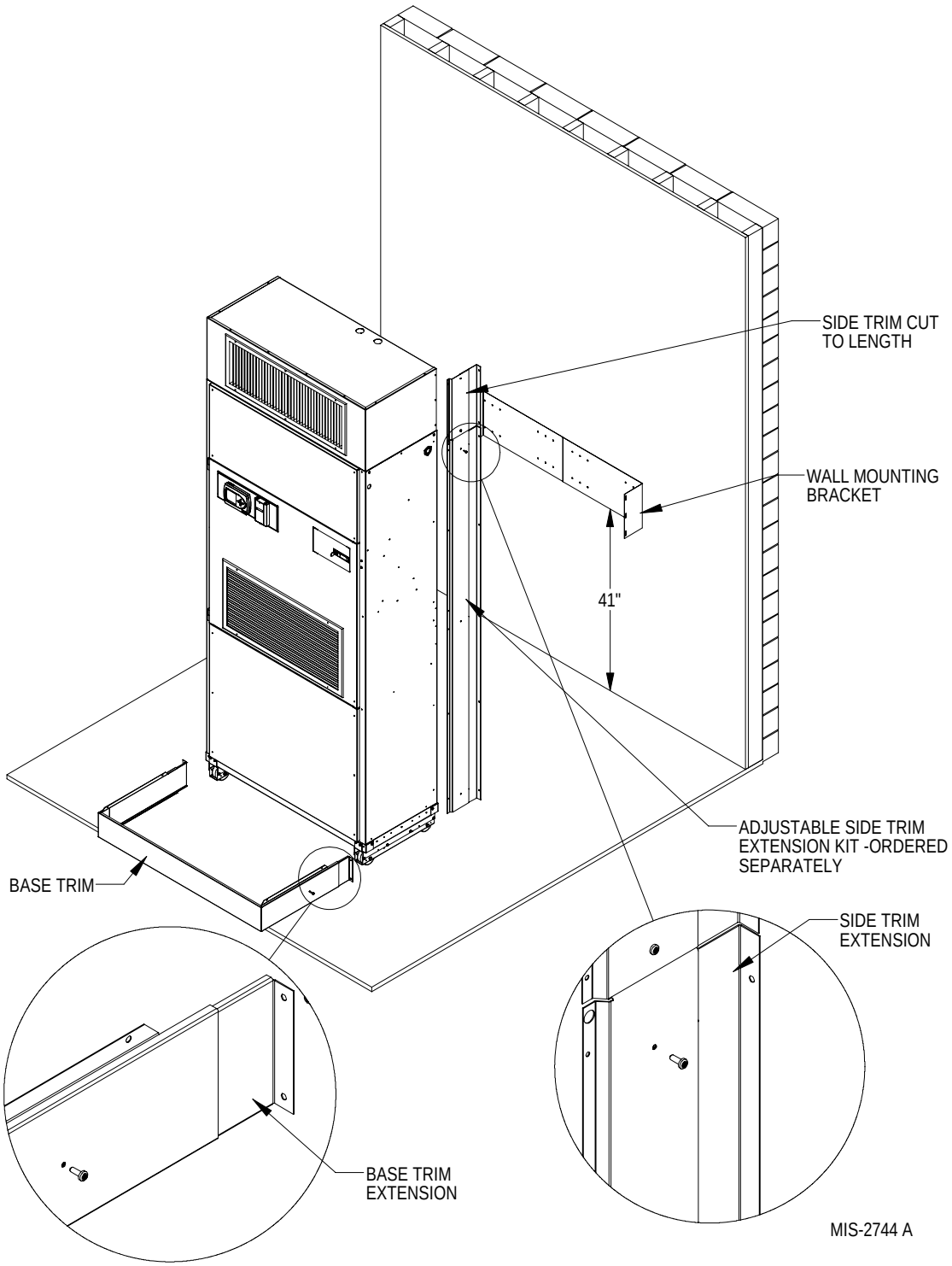

**FIGURE 12**
**COMPONENT LOCATION**

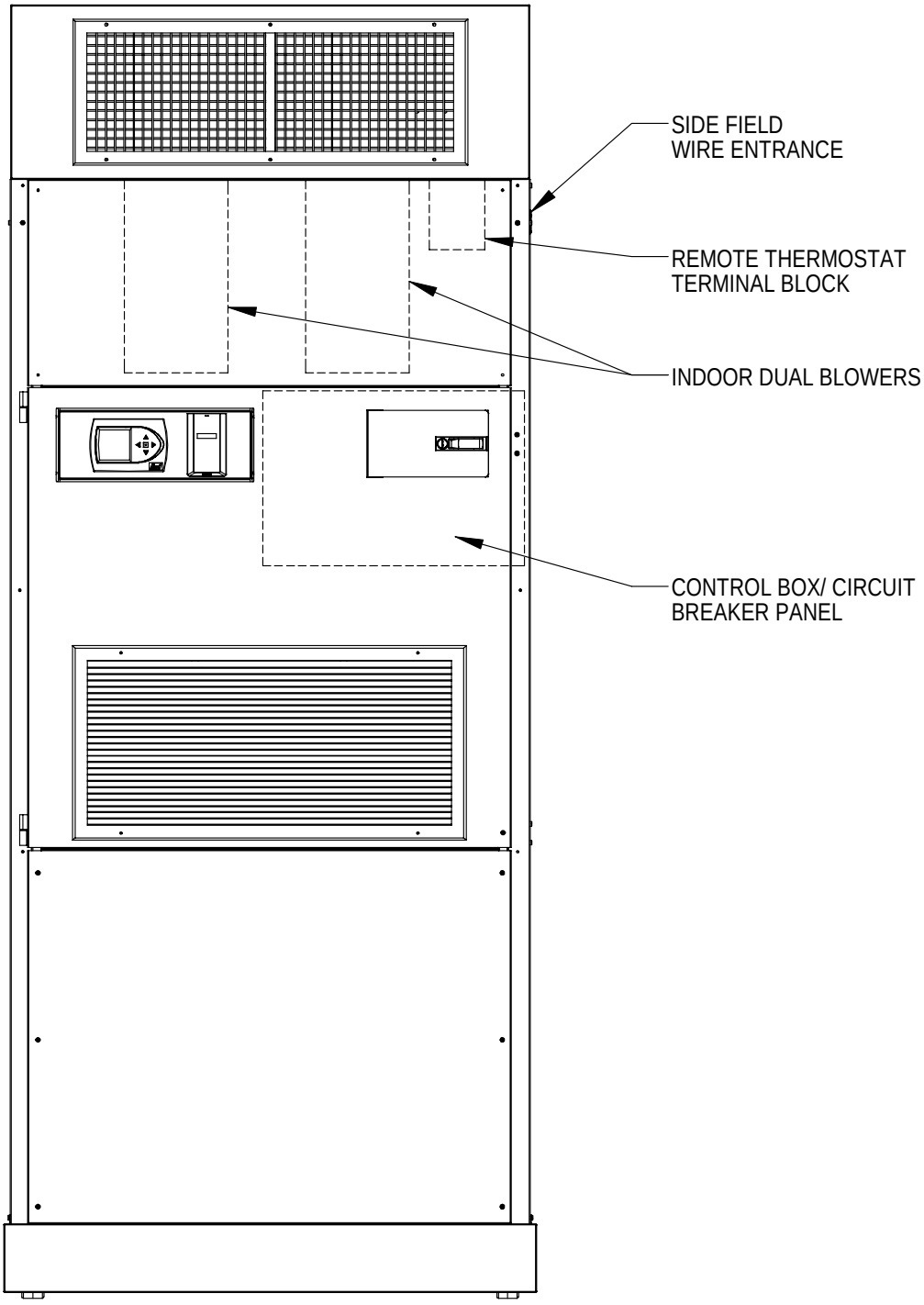


MIS-2745

## WIRING – MAIN POWER

Refer to the unit rating plate and/or Table 2 for wire sizing information and maximum fuse or "HACR Type" circuit breaker size. Each unit is marked with a "Minimum Circuit Ampacity". This means that the field wiring used must be sized to carry that amount of current. Depending on the installed KW of electric heat, there may be two field power circuits required. If this is the case, the unit serial plate will so indicate. All models are suitable only for connection with copper wire. Each unit and/or wiring diagram will be marked "Use Copper Conductors Only". These instructions ***must be*** adhered to. Refer to the National Electrical Code (NEC) for complete current carrying capacity data on the various insulation grades of wiring material. All wiring must conform to NEC and all local codes.

The electrical data lists fuse and wire sizes (75°C copper) for all models, including the most commonly used heater sizes. Also shown are the number of field power circuits required for the various models with heaters.

The unit rating plate lists a "Maximum Time Delay Relay Fuse" or "HACR Type" circuit breaker that is to be used with the equipment. The correct size must be used for proper circuit protection, and also to assure that there will be no nuisance tripping due to the momentary high starting current of the compressor motor.

The disconnect access door on this unit may be locked to prevent unauthorized access to the disconnect.

The field wiring connections are located behind the top panel in the circuit breaker panel. The return air panel must be removed first. This panel is equipped with a door switch, which shuts the unit down when it is removed. The filter rack must be removed next.

## WIRING – LOW VOLTAGE WIRING

### 230/208V, 1 PHASE AND 3 PHASE EQUIPMENT DUAL PRIMARY VOLTAGE TRANSFORMERS

All equipment leaves the factory wired on 240V tap. For 208V operation, reconnect from 240V to 208V tap. The acceptable operating voltage range for the 240 and 208V taps are as noted in Table 2.

**TABLE 2**
**OPERATING VOLTAGE RANGE**

| TAP | RANGE |
|---|---|
| 240V | 253 - 216 |
| 208V | 220 - 187 |

*NOTE: The voltage should be measured at the field power connection point in the unit and while the unit is operating at full load (maximum amperage operating condition).*

The standard Climate Control ***Option X*** is a remote thermostat connection terminal block. See Figure 14 for wiring diagram. Compatible thermostats are listed in Table 3.

The Climate Control ***Option D*** is an electronic, programmable thermostat. The subbase of the thermostat is factory wired to the front panel of the unit. See Figure 15 for wiring diagram. Compatible for use with Energy Recovery Ventilator or Economizer.

The Climate Control ***Option H*** is an electronic, programmable thermostat and $CO_2$ controller. The subbase of the thermostat and $CO_2$ controller are factory wired to the front panel of the unit. See Figure 16 for wiring diagram.

## GENERAL

This unit is equipped with a variable speed ECM motor. The motor is designed to maintain rated airflow up to the maximum static allowed. ***It is important that the blower motor plugs are not plugged in or unplugged while the power is on. Failure to remove power prior to unplugging or plugging in the motor could result in motor failure.***

**⚠ CAUTION**

Do not plug in or unplug blower motor connectors while the power is on. Failure to do so may result in motor failure.

**TABLE 3**
**WALL THERMOSTATS**

| Thermostat | Predominant Features |
|---|---|
| 8403-060<br>(1120-445) | 3 stage Cool; 3 stage Heat<br>Programmable/Non-Programmable Electronic<br>HP or Conventional<br>Auto or Manual changeover |

## LOW VOLTAGE CONNECTIONS

The *"R"* terminal is the 24 VAC *hot* terminal and is supplied through Pin #10 of Plug P2.

The *"C"* terminal is the 24 VAC *common/grounded* terminal and feeds through Pin #11 of Plug P2.

The *"G"* terminal is the *indoor blower input signal* and feeds through Pin #6 of Plug P2.

The *"Y1"* terminal is the *compressor starting signal* and feeds through Pin #7 of Plug P2.

The *"Y2"* terminal is the *compressor staging solenoid signal* and feeds through Pin #4 of Plug P2.

The *"O"* terminal is the *reversing valve signal* and feeds through Pin #8 of Plug P2.

The *"A"* terminal is the *ventilation demand signal* and outputs a signal for ventilation during occupied programming conditions, and feeds through Pin #5 of Plug P2.

The *"W2"* terminal is the *electric heat signal* and feeds through Pin #9 of Plug P2.

The *"W1/E"* terminal is the *emergency heat signal* and feeds through Pin #3 of Plug P2.

The *"L"* terminal is used as an *input terminal* when a CS2000 infrared occupancy device is used. It feeds through Pin #12 of Plug P2.

The *"D"* terminal is used only of dehumidification models and feeds through Pin #1 of Plug P2.

**LOW VOLTAGE CONNECTIONS FOR DDC CONTROL**

| | |
|---|---|
| Fan Only | Energize G |
| Ventilation | Energize G, A (any mode of operation) |
| Part Load Cooling | Energize G, Y1, O |
| Full Load Cooling | Energize G, Y1, Y2, O |
| Part Load HP Heating | Energize G, Y1 |
| Full Load HP Heating | Energize G, Y1, Y2 |
| Electric Heat | Energize G, W2 |
| Dehumidification | Energize G, D, O |

**FIGURE 13**
**BLOWER MOTOR LOW VOLTAGE WIRE HARNESS PLUG**

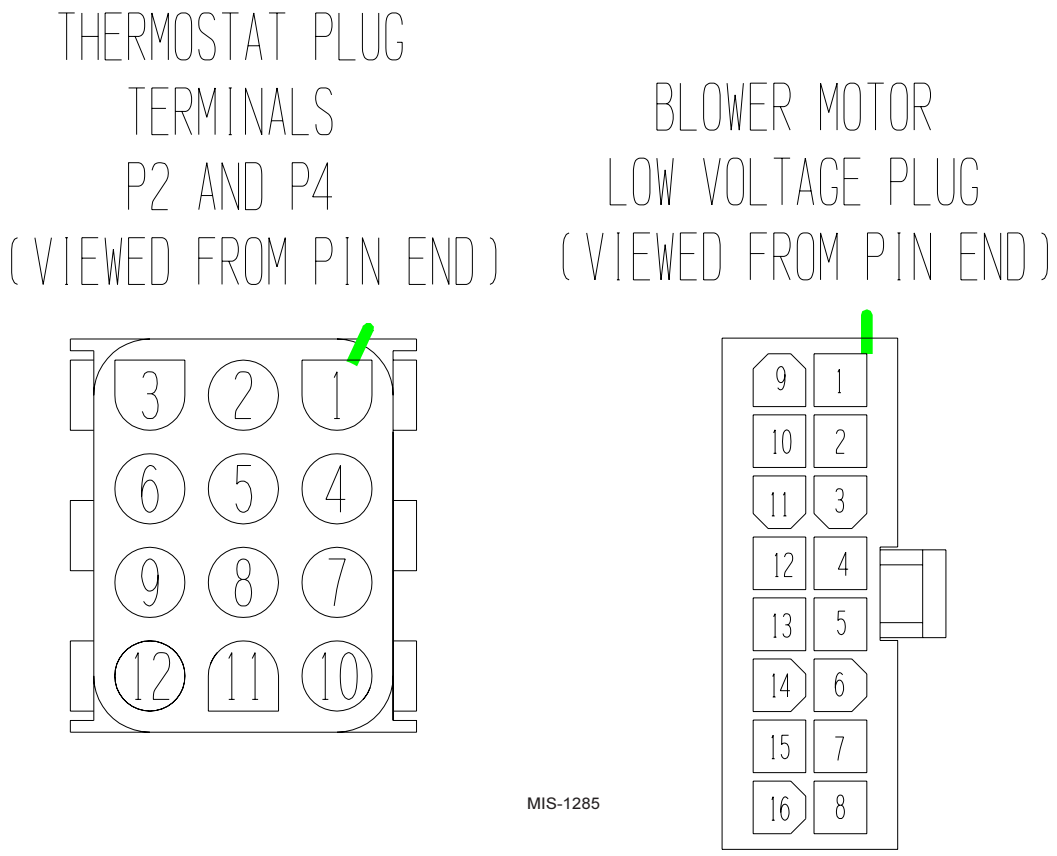

## FIGURE 14
## REMOTE THERMOSTAT WIRING DIAGRAM
## "X" OPTION

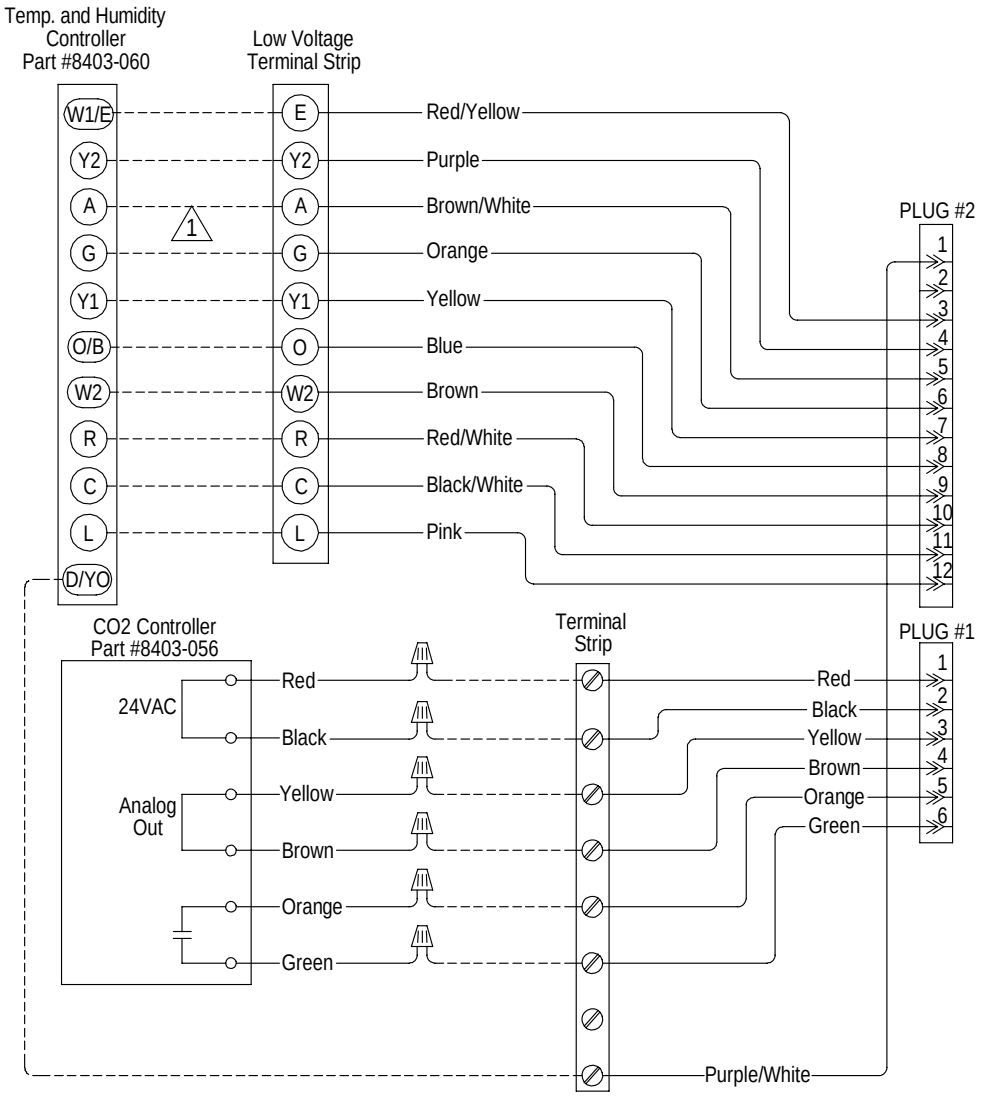


1 FOR **ENERGY RECOVERY VENTILATOR** WITH CO2 CONTROL, **DO NOT** CONNECT "A" OCCUPANCY INPUT BETWEEN THERMOSTAT AND LOW VOLTAGE TERMINAL STRIP. **DO MAKE** THIS CONNECTION WHEN APPLYING A **COMMERCIAL ROOM VENTILATOR** WITH CO2 CONTROL.

4115-102 B

## FIGURE 15
## FACTORY MOUNTED THERMOSTAT WIRING DIAGRAM
## "D" THERMOSTAT OPTION

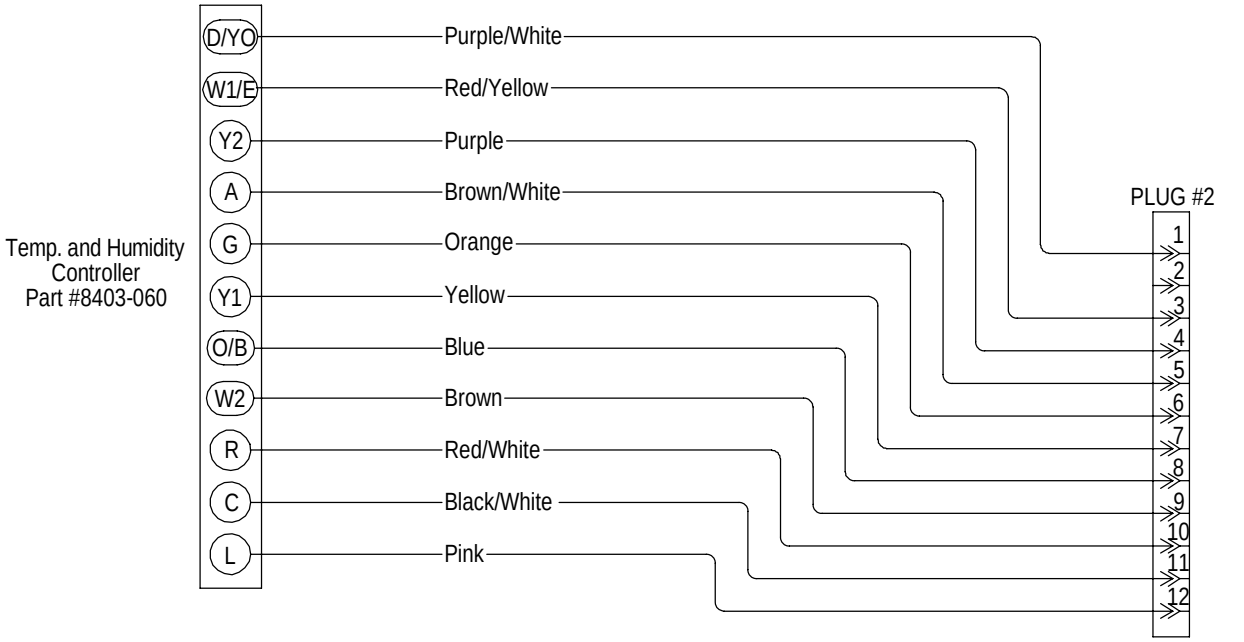


4115-100 A

## FIGURE 16
## FACTORY MOUNTED THERMOSTAT AND $CO_2$ VENT CONTROL WIRING DIAGRAM
## "H" THERMOSTAT OPTION

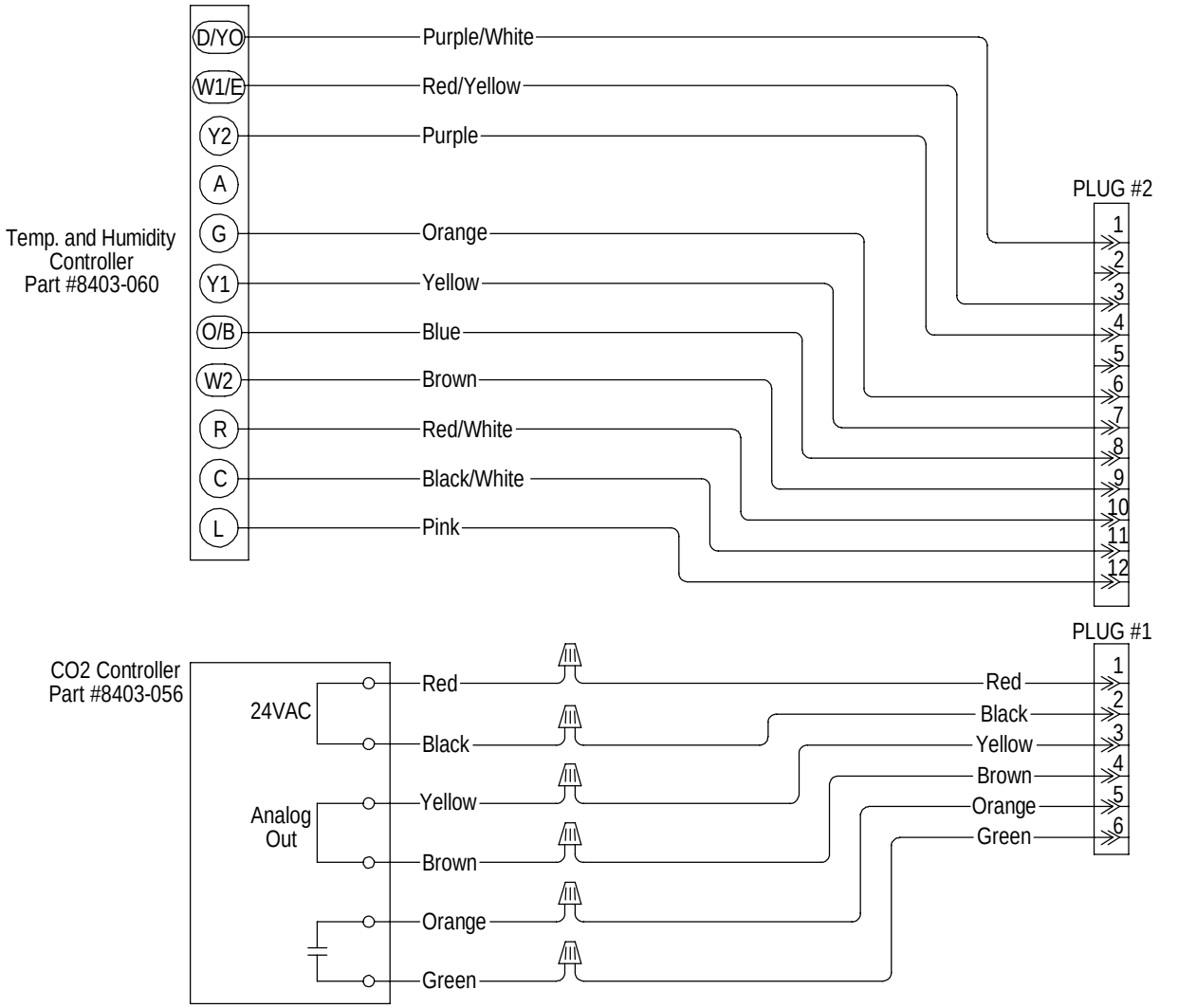

## FIGURE 17
## REMOTE THERMOSTAT WITH MOUNTED/WIRED $CO_2$ CONTROL WIRING DIAGRAM
## "K" THERMOSTAT OPTION

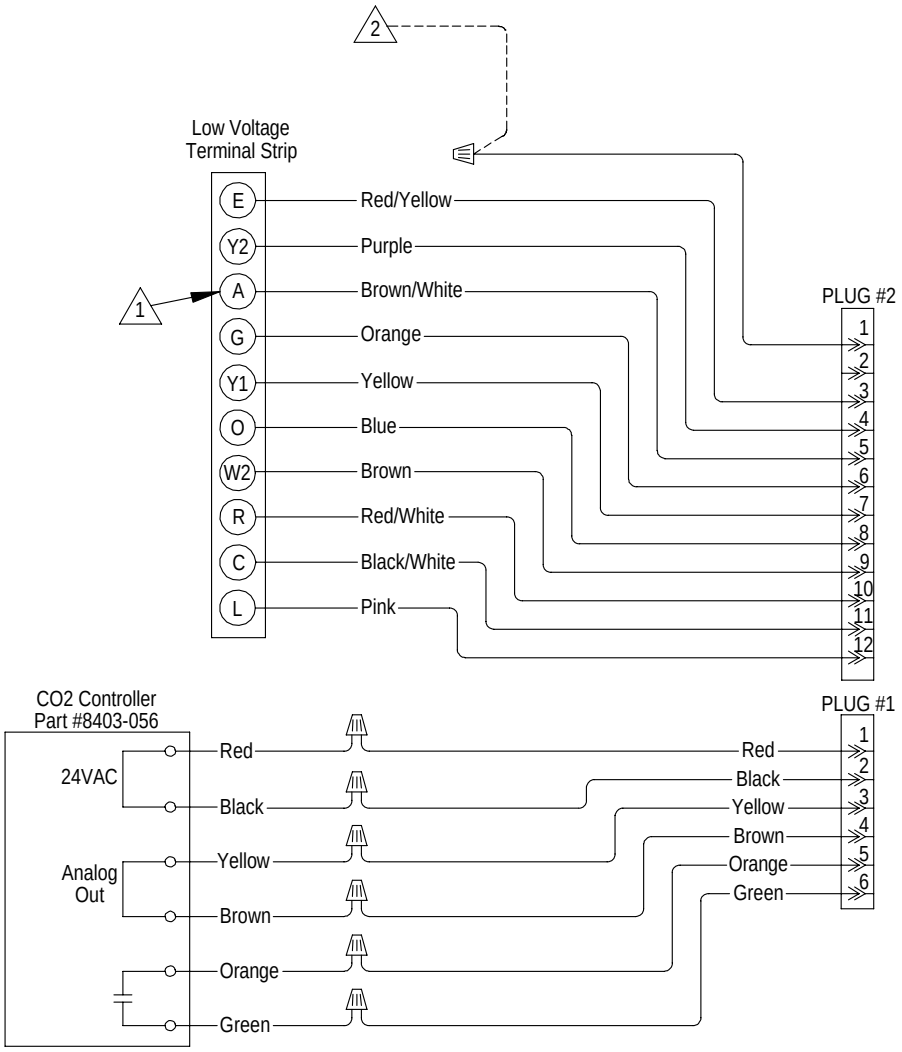


1 FOR ENERGY RECOVERY VENTILATOR WITH CO2 CONTROL, DO NOT CONNECT "A" OCCUPANCY INPUT BETWEEN THERMOSTAT AND LOW VOLTAGE TERMINAL STRIP. DO MAKE THIS CONNECTION WHEN APPLYING A COMMERCIAL ROOM VENTILATOR WITH CO2 CONTROL.

2 FOR DEHUMIDIFICATION MODELS (EQUIPPED WITH FACTORY HOT GAS REHEAT) CONNECT SIGNAL FOR HUMIDISTAT TO PURPLE-WHITE WIRE.

4115-105

## DESCRIPTION OF STANDARD EQUIPMENT

### LOW PRESSURE SWITCH

*NOTE: This unit is supplied with two low pressure switches installed, a 45 PSIG and a 60 PSIG.*

The 60 PSIG is wired into the system. This switch is suitable for ground water (pump and dump), and water loop (boiler/tower applications).

To avoid nuisance lockouts for ground loop application with antifreeze, the 60 PSIG switch should be disconnected and connect the 45 PSIG switch.

The leads for both switches are located in the lower electrical connection panel. The switch bodies are marked with pressure settings. The 60 PSIG switch has blue leads. The 45 PSIG switch has yellow leads.

### HIGH PRESSURE SWITCH

This unit is equipped with a high pressure switch that will stop the compressor in the event of abnormal high pressure occurrences.

The high and low pressure switches are included in a lockout circuit that is resettable from the room thermostat.

## COMPRESSOR CONTROL MODULE

The compressor control module is standard on models covered by this manual. The compressor control is an anti-short cycle/lockout timer with high and low pressure switch monitoring and alarm relay output.

### ADJUSTABLE DELAY ON MAKE AND BREAK TIMER

On initial power up or any time power is interrupted to the unit, the *delay on make* period begins, which will be 2 minutes plus 10% of the *delay on break* setting. When the delay on make is complete and the high pressure switch (and low pressure switch, if employed) is closed, the compressor contactor is energized. Upon shutdown, the delay on break timer starts and prevents restart until the delay on break and delay on make periods have expired.

During routine operation of the unit with no power interruptions the compressor will operate on demand with no delay.

### HIGH PRESSURE SWITCH AND LOCKOUT SEQUENCE

If the high pressure switch opens, the compressor contactor will de-energize immediately. The lockout timer will go into a *soft lockout* and stay in soft lockout until the high pressure switch closes ***and*** the delay on break time has expired. If the high pressure switch opens again in the same operating cycle, the unit will go into *manual lockout* condition and the alarm relay circuit will energize. Recycling the wall thermostat resets the manual lockout.

### LOW PRESSURE SWITCH, BYPASS AND LOCKOUT SEQUENCE

If the low pressure switch opens for more than 120 seconds, the compressor contactor will de-energize and go into a soft lockout. Regardless the state of the low pressure switch, the contactor will reenergize after the delay on make time delay has expired. If the low pressure switch remains open, or opens again for longer than 120 seconds, the unit will go into manual lockout condition and the alarm relay circuit will energize. Recycling the wall thermostat resets the manual lockout.

### ALARM RELAY OUTPUT

Alarm terminal is output connection for applications where alarm relay is employed. This terminal is powered whenever compressor is locked out due to HPC or LPC sequences as described.

*Note: Both high and low pressure switch controls are inherently automatic reset devices. The high pressure switch and low pressure switch cut out and cut in settings are fixed by specific air conditioner or heat pump unit model. The lockout feature, both soft and manual, are a function of the Compressor Control Module.*

## ADJUSTMENTS

### ADJUSTABLE DELAY ON MAKE AND DELAY ON BREAK TIMER

The potentiometer is used to select delay on break time from 30 seconds to 5 minutes. Delay on Make (DOM) timing on power up and after power interruptions is equal to 2 minutes plus 10% of Delay on Break (DOB) setting. See Delay on Make Timing chart on page 25.

During routine operation of the unit with no power interruptions the compressor will operate on demand with no delay.

| DELAY ON MAKE TIMING | | | |
|---|---|---|---|
| .05 minutes | (30 seconds) | DOB | = 123 seconds DOM |
| 1.0 minutes | (60 seconds) | DOB | = 126 seconds DOM |
| 2.0 minutes | (120 Seconds) | DOB | = 132 seconds DOM |
| 3.0 minutes | (180 seconds) | DOB | = 138 seconds DOM |
| 4.0 minutes | (240 seconds) | DOB | = 144 seconds DOM |
| 5.0 minutes | (300 seconds) | DOB | = 150 seconds DOM |

## OPTIONAL CFM

All models covered by this Manual are factory set to operate at rated CFM levels as shown in Table 4. Rated CFM is required for ducted applications for maximum performance ratings.

For free blow applications where Full Load Rated CFM is undesirable due to sound levels, there is an optional CFM that can be obtained (-10%). This CFM level will reduce the system capacity performance by approximately 2% at the same energy efficiency.

**For Full Load Optional CFM**:

1. Disconnect all power to the unit. Failure to do so may result in damage to the motor.
2. Open hinged return air grille service panel.
3. Open control panel cover.
4. Locate low voltage terminal strip and purple wire with white trace that connects to terminal "Y2". Disconnect this wire from terminal "Y2" and tape off end.
5. Reverse steps to reassemble.

## IMPORTANT INSTALLER NOTE

For improved start up performance, wash the indoor coil with dishwashing detergent.

## PHASE MONITOR

All units with three phase scroll compressors are equipped with a three phase line monitor to prevent compressor damage due to phase reversal.

The phase monitor in this unit is equipped with two LEDs. If the Y signal is present at the phase monitor and phases are correct, the green LED will light and contactor will energize. If phases are reversed, the red fault LED will be lit and compressor operation is inhibited.

If a fault condition occurs, reverse two of the supply leads to the unit. Do not reverse any of the unit factory wires as damage may occur.

## SERVICE HINTS

1. Caution user to maintain clean air filters at all times. Also, not to needlessly close off supply air registers. This may reduce airflow through the system which shortens equipment service life as well as increasing operating costs and noise levels.
2. Check all power fuses or circuit breakers to be sure that they are the correct rating.
3. The heat pump wall thermostats perform multiple functions. Be sure that all function switches are correctly set for the desired operating mode before trying to diagnose any reported service problems.

## SEQUENCE OF OPERATION

**COOLING** – A 24V solenoid coil on the reversing valve controls the cooling cycle operation. There are two different thermostat options. 1.) Allows for "Auto" changeover from cycle to cycle. 2.) The other (Manual changeover). The Auto changeover mode will cause the reversing valve solenoid to cycle with each cooling call and may cause a "swooshing sound" with refrigerant equalization at the end of each cycle.

On a call for Part Load Cooling by the thermostat, it completes a circuit from "R" to "Y1", "O" and "G" for part load cooling. "Y1" starts the compressor, "O" energizes the reversing valve and "G" starts the indoor blower.

On a call for Full Load Cooling by the thermostat, it completes the same as Part Load Cooling above, but also includes a signal to "Y2". Signal "Y2" energizes the staging solenoid on the side of the compressor and the signal also goes to the indoor blower to ramp-up the airflow.

**HEATING** – On a call for Part Load Heating by the thermostat, it completes a circuit from "R" to "Y1" and "G". "Y1" starts the compressor and "G" starts the indoor blower.

On a call for Full Load Heating by the thermostat, it completes the same as Part Load Heating above, but also includes a signal to "Y2". Signal "Y2" energizes the staging solenoid on the side of the compressor and the signal also goes to the indoor blower to ramp-up the airflow.

## PRESSURE SERVICE PORTS

High and low pressure service ports are installed on all units so that the system operating pressures can be observed. Pressure charts are located on the backside of the units lower service door, as well as later in this Manual (Table 5). It is imperative to match the correct pressure chart to the unit by model number. All upper service doors must be attached to obtain proper reading. The service ports are in the lower compressor section on the tubing adjacent to the compressor.

## PIPING ACCESS TO UNIT

Water piping to and from the coaxial water coil is intended to enter/exit the unit through the rectangular hole (See Figures 1, 8A, 18 and 19). The connections on the water coil are a double O-ring with a retainer nut that secures it in place.

Various double O-ring fittings are available so you may then connect to the coaxial coil with various methods and materials. The methods include 1" barbed fittings (straight and 90°), 1" MPT (straight and 90°), and 1¼" hot fusion fitting with P/T fitting). (See Table 6.)

***Note:*** All double O-ring fittings require "hand tightening only". Do not use a wrench or pliers as retainer nut can be damaged with excessive force. Avoid cross-threading the nut.

***Note:*** Apply petroleum jelly to o-rings to prevent damage and aid in insertion.

**TABLE 4**
**INDOOR BLOWER PERFORMANCE**

| MODEL | RATED ESP | ① MAX. ESP | ④ CONTINUOUS AIRFLOW | 1st STAGE | ③ OPTIONAL 2nd STAGE | 2nd STAGE |
|---|---|---|---|---|---|---|
| QW2S1 | 0.0 | 0.5 | 800 | 800 | 900 | 1000 |
| QW3S1 | 0.0 | 0.5 | 800 | 900 | 1050 | 1150 |
| QW4S1 | 0.0 | 0.5 | 900 | 1200 | 1300 | 1450 |
| QW5S1 | 0.0 | 0.5 | 900 | 1400 | 1500 | 1650 |

*NOTE: These units are equipped with a variable speed (ECM) indoor motor that automatically adjusts itself to maintain approximately the same rate of indoor airflow in both heating and cooling, dry and wet coil conditions, and at both 230/208 or 460 volts.*

① Maximum ESP (inches WC) shown is with 2" MERV 6 pleated filter.
② Rated CFM for ducted applications – required for maximum performance rating. To obtain full CFM on models QW3S1, QW4S1 and QW5S1, locate pink wire that is secured to purple wire at low voltage terminal strip in the control box, and attach it to the "Y2" terminal along with the purple wire.
③ Optional 2nd Stage CFM – the unit is factory shipped to operate on full 2nd Stage airflow. If the optional 2nd Stage airflow is desired, it requires removal of gray wire form "Y2" terminal of low voltage terminal strip in unit main control panel. This reduces system capacity performance by approximately 2% at the same energy efficiency.
④ Continuous CFM the total airflow being circulated during continuous blower operation.

**FIGURE 18**
**FLUID CONNECTIONS ON UNIT WITH VENTILATION WALL SLEEVE**

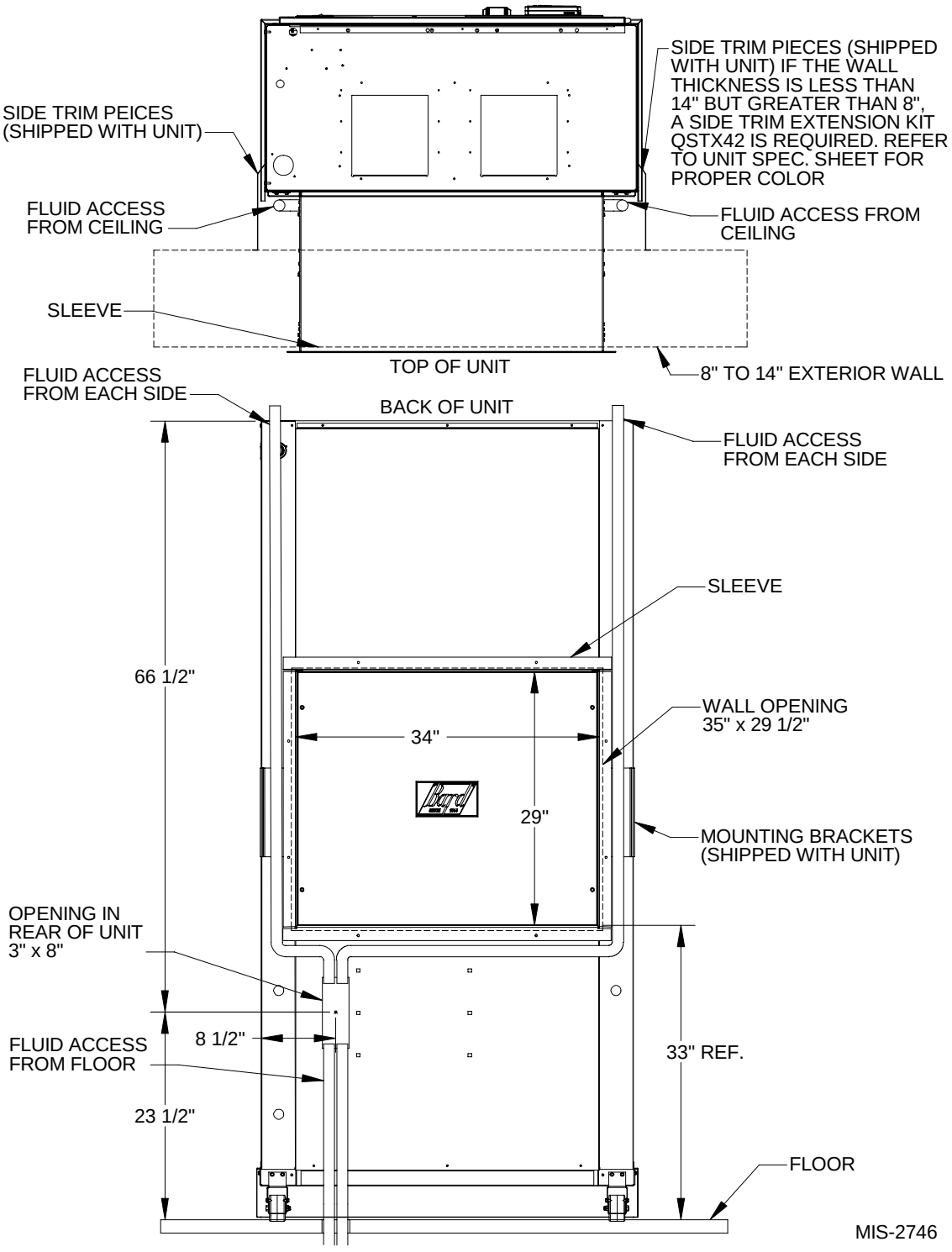

**FIGURE 19**
**FLUID CONNECTIONS ON UNIT WITHOUT VENTILATION WALL SLEEVE**

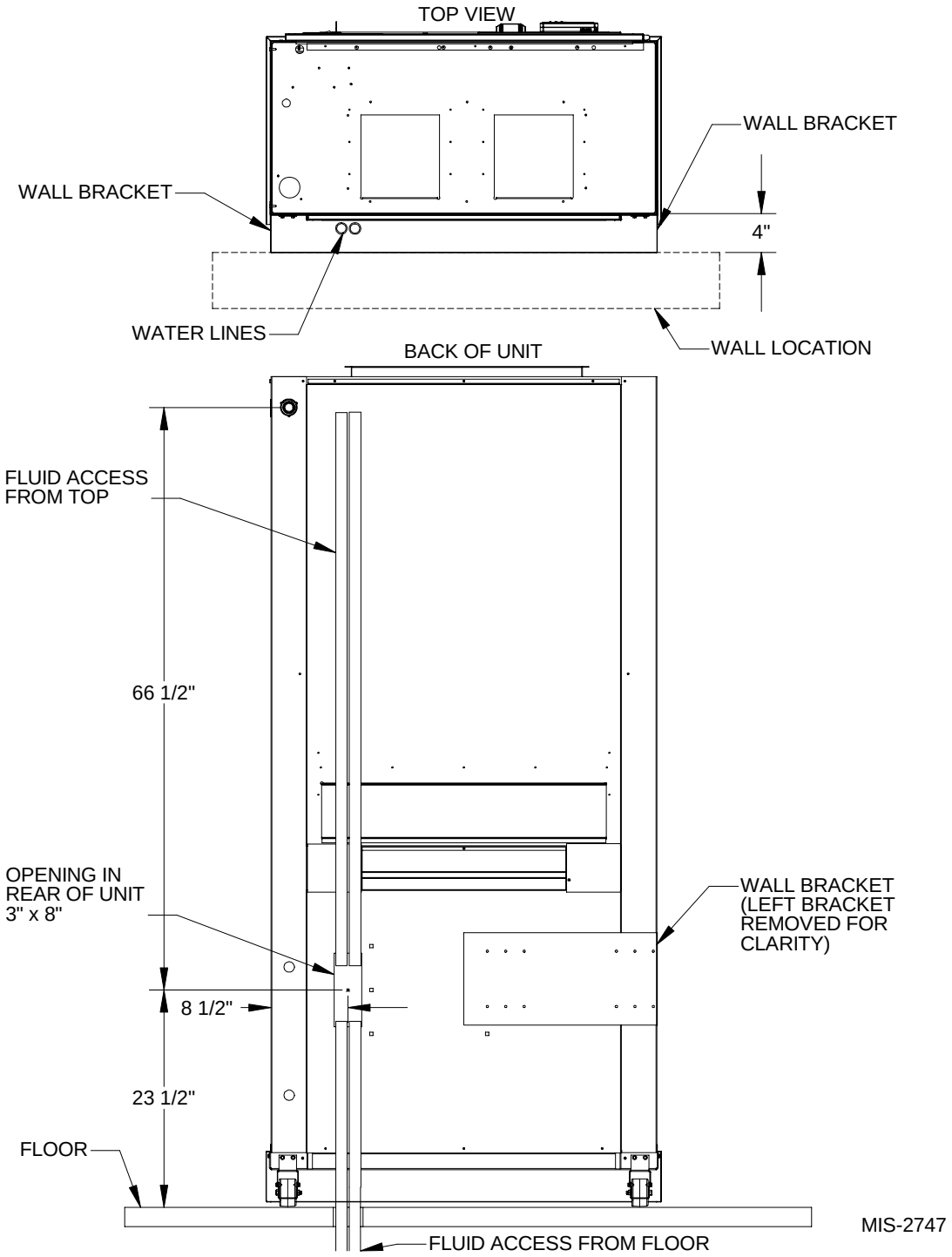

# TABLE 5
# PRESSURE TABLE

| Model | Return Air Temperature | Pressure | FULL LOAD COOLING — Fluid Temperature Entering Water Coil °F | | | | | | | | | | | | | | | | |
|---|---|---|---|---|---|---|---|---|---|---|---|---|---|---|---|---|---|---|---|
| | | | 30°F | 35°F | 40°F | 45°F | 50°F | 55°F | 60°F | 65°F | 70°F | 75°F | 80°F | 85°F | 90°F | 95°F | 100°F | 105°F | 110°F |
| QW2S | 75° DB 62° WB | Low Side | 106 | 108 | 111 | 114 | 117 | 120 | 122 | 125 | 128 | 130 | 132 | 134 | 136 | 138 | 140 | 142 | 144 |
| | | High Side | 131 | 146 | 161 | 176 | 191 | 206 | 221 | 236 | 252 | 272 | 293 | 313 | 334 | 355 | 375 | 396 | 417 |
| | 80° DB 67° WB | Low Side | 113 | 116 | 119 | 122 | 125 | 128 | 131 | 134 | 137 | 139 | 141 | 144 | 146 | 148 | 150 | 152 | 154 |
| | | High Side | 134 | 150 | 165 | 181 | 196 | 212 | 227 | 243 | 258 | 279 | 300 | 322 | 343 | 364 | 385 | 406 | 427 |
| | 85° DB 72° WB | Low Side | 121 | 125 | 128 | 131 | 134 | 138 | 141 | 144 | 147 | 150 | 152 | 154 | 157 | 159 | 161 | 164 | 166 |
| | | High Side | 139 | 155 | 171 | 187 | 203 | 219 | 235 | 251 | 267 | 289 | 311 | 333 | 355 | 377 | 398 | 420 | 442 |
| QW3S | 75° DB 62° WB | Low Side | 83 | 87 | 91 | 94 | 98 | 102 | 106 | 109 | 113 | 116 | 118 | 121 | 123 | 126 | 128 | 131 | 133 |
| | | High Side | 132 | 148 | 165 | 181 | 198 | 215 | 231 | 248 | 264 | 285 | 306 | 327 | 347 | 368 | 389 | 410 | 431 |
| | 80° DB 67° WB | Low Side | 89 | 93 | 97 | 101 | 105 | 109 | 113 | 117 | 121 | 124 | 126 | 129 | 132 | 134 | 137 | 140 | 142 |
| | | High Side | 135 | 152 | 169 | 186 | 203 | 220 | 237 | 254 | 271 | 292 | 314 | 335 | 356 | 378 | 399 | 420 | 442 |
| | 85° DB 72° WB | Low Side | 96 | 100 | 104 | 109 | 113 | 117 | 121 | 126 | 130 | 133 | 136 | 139 | 142 | 144 | 147 | 150 | 153 |
| | | High Side | 140 | 157 | 175 | 193 | 210 | 228 | 245 | 263 | 280 | 303 | 325 | 347 | 369 | 391 | 413 | 435 | 457 |
| QW4S | 75° DB 62° WB | Low Side | 91 | 94 | 97 | 101 | 104 | 107 | 110 | 114 | 117 | 119 | 121 | 122 | 124 | 126 | 128 | 130 | 132 |
| | | High Side | 146 | 162 | 177 | 193 | 208 | 224 | 239 | 255 | 270 | 291 | 312 | 333 | 354 | 375 | 396 | 417 | 438 |
| | 80° DB 67° WB | Low Side | 97 | 101 | 104 | 108 | 111 | 115 | 118 | 122 | 125 | 127 | 129 | 131 | 133 | 135 | 137 | 139 | 141 |
| | | High Side | 150 | 166 | 182 | 198 | 214 | 229 | 245 | 261 | 277 | 299 | 320 | 342 | 363 | 385 | 406 | 428 | 449 |
| | 85° DB 72° WB | Low Side | 104 | 108 | 112 | 116 | 119 | 123 | 127 | 131 | 134 | 137 | 139 | 141 | 143 | 145 | 147 | 149 | 152 |
| | | High Side | 155 | 172 | 188 | 205 | 221 | 237 | 254 | 270 | 287 | 309 | 331 | 353 | 376 | 398 | 420 | 442 | 465 |
| QW5S | 75° DB 62° WB | Low Side | 92 | 94 | 96 | 98 | 101 | 103 | 105 | 107 | 109 | 111 | 112 | 114 | 115 | 116 | 118 | 119 | 121 |
| | | High Side | 147 | 163 | 178 | 194 | 210 | 225 | 241 | 256 | 272 | 293 | 313 | 334 | 355 | 375 | 396 | 416 | 437 |
| | 80° DB 67° WB | Low Side | 98 | 100 | 103 | 105 | 108 | 110 | 112 | 115 | 117 | 119 | 120 | 122 | 123 | 125 | 126 | 128 | 129 |
| | | High Side | 151 | 167 | 183 | 199 | 215 | 231 | 247 | 263 | 279 | 300 | 321 | 343 | 364 | 385 | 406 | 427 | 448 |
| | 85° DB 72° WB | Low Side | 105 | 108 | 110 | 113 | 116 | 118 | 121 | 123 | 126 | 127 | 129 | 131 | 132 | 134 | 135 | 137 | 139 |
| | | High Side | 156 | 173 | 189 | 206 | 223 | 239 | 256 | 272 | 289 | 311 | 333 | 354 | 376 | 398 | 420 | 442 | 464 |

| Model | Return Air Temperature | Pressure | FULL LOAD HEATING — Fluid Temperature Entering Water Coil °F | | | | | | | | | | | | | | | | |
|---|---|---|---|---|---|---|---|---|---|---|---|---|---|---|---|---|---|---|---|
| | | | 5°F | 10°F | 15°F | 20°F | 25°F | 30°F | 35°F | 40°F | 45°F | 50°F | 55°F | 60°F | 65°F | 70°F | 75°F | 80°F | 85°F |
| QW2S | 70° DB | Low Side | 46 | 53 | 60 | 67 | 74 | 81 | 88 | 95 | 102 | 109 | 118 | 128 | 137 | 146 | 155 | 165 | 174 |
| | | High Side | 262 | 270 | 279 | 287 | 296 | 304 | 313 | 321 | 330 | 338 | 347 | 355 | 364 | 372 | 381 | 389 | 398 |
| QW3S | 70° DB | Low Side | 40 | 47 | 55 | 62 | 70 | 77 | 85 | 92 | 100 | 107 | 114 | 122 | 129 | 136 | 143 | 151 | 158 |
| | | High Side | 280 | 290 | 300 | 310 | 320 | 330 | 340 | 350 | 360 | 370 | 380 | 389 | 399 | 408 | 418 | 427 | 437 |
| QW4S | 70° DB | Low Side | 36 | 43 | 51 | 58 | 66 | 73 | 81 | 88 | 96 | 103 | 112 | 122 | 131 | 140 | 149 | 159 | 168 |
| | | High Side | 290 | 298 | 307 | 315 | 324 | 332 | 341 | 349 | 358 | 366 | 378 | 389 | 401 | 412 | 424 | 435 | 447 |
| QW5S | 70° DB | Low Side | 37 | 44 | 51 | 58 | 65 | 72 | 79 | 86 | 93 | 100 | 109 | 119 | 128 | 137 | 146 | 156 | 165 |
| | | High Side | 288 | 300 | 312 | 324 | 335 | 347 | 359 | 371 | 382 | 394 | 408 | 421 | 435 | 448 | 462 | 475 | 489 |

| Model | Return Air Temperature | Pressure | PART LOAD COOLING — Fluid Temperature Entering Water Coil °F | | | | | | | | | | | | | | | | |
|---|---|---|---|---|---|---|---|---|---|---|---|---|---|---|---|---|---|---|---|
| | | | 30°F | 35°F | 40°F | 45°F | 50°F | 55°F | 60°F | 65°F | 70°F | 75°F | 80°F | 85°F | 90°F | 95°F | 100°F | 105°F | 110°F |
| QW2S | 75° DB 62° WB | Low Side | 105 | 109 | 113 | 117 | 121 | 125 | 129 | 133 | 137 | 139 | 141 | 143 | 144 | 146 | 148 | 149 | 151 |
| | | High Side | 120 | 135 | 150 | 165 | 179 | 194 | 209 | 224 | 239 | 259 | 279 | 299 | 319 | 339 | 359 | 379 | 399 |
| | 80° DB 67° WB | Low Side | 112 | 116 | 121 | 125 | 130 | 134 | 138 | 143 | 147 | 149 | 151 | 153 | 154 | 156 | 158 | 160 | 162 |
| | | High Side | 123 | 138 | 154 | 169 | 184 | 199 | 215 | 230 | 245 | 266 | 286 | 307 | 327 | 348 | 368 | 389 | 409 |
| | 85° DB 72° WB | Low Side | 120 | 125 | 130 | 135 | 139 | 144 | 149 | 153 | 158 | 160 | 162 | 164 | 166 | 168 | 170 | 172 | 174 |
| | | High Side | 127 | 143 | 159 | 175 | 190 | 206 | 222 | 238 | 254 | 275 | 296 | 317 | 338 | 360 | 381 | 402 | 423 |
| QW3S | 75° DB 62° WB | Low Side | 98 | 102 | 106 | 110 | 114 | 117 | 121 | 125 | 129 | 130 | 131 | 132 | 133 | 134 | 135 | 136 | 137 |
| | | High Side | 124 | 139 | 154 | 169 | 184 | 199 | 215 | 230 | 245 | 265 | 286 | 306 | 327 | 347 | 368 | 388 | 409 |
| | 80° DB 67° WB | Low Side | 105 | 109 | 113 | 117 | 122 | 126 | 130 | 134 | 138 | 139 | 140 | 141 | 142 | 143 | 144 | 145 | 146 |
| | | High Side | 127 | 143 | 158 | 174 | 189 | 205 | 220 | 236 | 251 | 272 | 293 | 314 | 335 | 356 | 377 | 398 | 419 |
| | 85° DB 72° WB | Low Side | 113 | 117 | 122 | 126 | 131 | 135 | 139 | 144 | 148 | 149 | 151 | 152 | 153 | 154 | 155 | 156 | 157 |
| | | High Side | 131 | 147 | 164 | 180 | 196 | 212 | 228 | 244 | 260 | 282 | 303 | 325 | 347 | 368 | 390 | 412 | 434 |
| QW4S | 75° DB 62° WB | Low Side | 104 | 107 | 111 | 115 | 118 | 122 | 126 | 129 | 133 | 134 | 134 | 135 | 136 | 137 | 137 | 138 | 139 |
| | | High Side | 129 | 144 | 159 | 174 | 190 | 205 | 220 | 235 | 251 | 271 | 292 | 312 | 332 | 353 | 373 | 394 | 414 |
| | 80° DB 67° WB | Low Side | 111 | 115 | 119 | 123 | 127 | 130 | 134 | 138 | 142 | 143 | 144 | 145 | 145 | 146 | 147 | 148 | 149 |
| | | High Side | 132 | 148 | 163 | 179 | 195 | 210 | 226 | 241 | 257 | 278 | 299 | 320 | 341 | 362 | 383 | 404 | 425 |
| | 85° DB 72° WB | Low Side | 119 | 123 | 128 | 132 | 136 | 140 | 144 | 148 | 153 | 154 | 154 | 155 | 156 | 157 | 158 | 159 | 160 |
| | | High Side | 137 | 153 | 169 | 185 | 201 | 217 | 234 | 250 | 266 | 288 | 309 | 331 | 353 | 375 | 396 | 418 | 440 |
| QW5S | 75° DB 62° WB | Low Side | 108 | 110 | 112 | 114 | 115 | 117 | 119 | 121 | 122 | 124 | 125 | 127 | 128 | 129 | 131 | 132 | 134 |
| | | High Side | 133 | 148 | 163 | 178 | 194 | 209 | 224 | 239 | 254 | 275 | 295 | 315 | 335 | 355 | 375 | 396 | 416 |
| | 80° DB 67° WB | Low Side | 116 | 118 | 120 | 122 | 124 | 125 | 127 | 129 | 131 | 133 | 134 | 136 | 137 | 139 | 140 | 142 | 143 |
| | | High Side | 136 | 152 | 167 | 183 | 199 | 214 | 230 | 245 | 261 | 282 | 302 | 323 | 344 | 364 | 385 | 406 | 426 |
| | 85° DB 72° WB | Low Side | 125 | 127 | 129 | 131 | 133 | 135 | 137 | 139 | 141 | 142 | 144 | 146 | 147 | 149 | 151 | 152 | 154 |
| | | High Side | 141 | 157 | 173 | 189 | 205 | 222 | 238 | 254 | 270 | 292 | 313 | 334 | 356 | 377 | 398 | 420 | 441 |

| Model | Return Air Temperature | Pressure | PART LOAD HEATING — Fluid Temperature Entering Water Coil °F | | | | | | | | | | | | | | | | |
|---|---|---|---|---|---|---|---|---|---|---|---|---|---|---|---|---|---|---|---|
| | | | 5°F | 10°F | 15°F | 20°F | 25°F | 30°F | 35°F | 40°F | 45°F | 50°F | 55°F | 60°F | 65°F | 70°F | 75°F | 80°F | 85°F |
| QW2S | 70° DB | Low Side | 15 | 26 | 37 | 49 | 60 | 71 | 82 | 94 | 105 | 116 | 125 | 135 | 144 | 153 | 162 | 172 | 181 |
| | | High Side | 232 | 240 | 248 | 256 | 264 | 272 | 280 | 288 | 296 | 304 | 311 | 318 | 325 | 332 | 339 | 346 | 353 |
| QW3S | 70° DB | Low Side | 38 | 47 | 56 | 65 | 73 | 82 | 91 | 100 | 108 | 117 | 127 | 137 | 147 | 157 | 167 | 177 | 187 |
| | | High Side | 250 | 260 | 270 | 280 | 290 | 300 | 310 | 320 | 330 | 340 | 350 | 361 | 371 | 381 | 391 | 402 | 412 |
| QW4S | 70° DB | Low Side | 39 | 47 | 55 | 64 | 72 | 80 | 88 | 97 | 105 | 113 | 122 | 131 | 140 | 149 | 158 | 167 | 176 |
| | | High Side | 262 | 269 | 277 | 284 | 292 | 299 | 307 | 314 | 322 | 329 | 338 | 347 | 355 | 364 | 373 | 382 | 390 |
| QW5S | 70° DB | Low Side | 43 | 50 | 58 | 65 | 73 | 80 | 88 | 95 | 103 | 110 | 120 | 129 | 139 | 148 | 158 | 167 | 177 |
| | | High Side | 271 | 280 | 290 | 299 | 309 | 318 | 328 | 337 | 347 | 356 | 367 | 378 | 388 | 399 | 410 | 421 | 431 |

**The data in the above pressure chart is based on the following flow rates:**

| FLOW RATE FOR VARIOUS FLUIDS | QW2S | QW3S | QW4S | QW6S |
|---|---|---|---|---|
| Flow rate required GPM for fresh water | 5 | 6 | 7 | 9 |
| Flow rate required GPM for 15% Methanol | 7 | 8 | 9 | 11 |
| Flow rate required GPM, cooling tower/boiler loop | 6.1 | 8.6 | 11.3 | 13.7 |

# TABLE 6
# OPTIONAL ACCESSORIES

## *Optional Accessories – Must be Used for Each Installation with Ventilation Options*

***Ventilation Wall Sleeves:***

| | |
|---|---|
| QWVS42 | Ventilation wall sleeve for walls up to 14 inches thick. **NOTE:** Unless they are to be field-supplied, side trim kit must be ordered for all installations. |

***Ventilation Louvers:***

| | |
|---|---|
| QLG-11 | Clear Anodized Aluminum for vent option |
| QLG-21 | Medium Bronze Anodized for vent option |
| QLG-31 | Dark Bronze Anodized Aluminum for vent option |

## *Side Trim Kits — Required for All Installations Unless Field-Supplied*

***NOTE:*** **The following accessory items must be selected so the finish (color) is matched to the QWS model that they will be used with.**

***Side Trim Extension Kits:***

| Model | Color | Model | Color | Model | Color | Space from back of unit to wall | *Unit Compatibility* |
|---|---|---|---|---|---|---|---|
| QSTX-V-6 | Platinum Vinyl | QSTX-4-6 | Gray Paint | QSTX-X-6 | Beige Paint | 4" to 6" | All |
| QSTX-V-8 | Platinum Vinyl | QSTX-4-8 | Gray Paint | QSTX-X-8 | Beige Paint | 6" to 8" | All |
| QSTX-V-10 | Platinum Vinyl | QSTX-4-10 | Gray Paint | QSTX-X-10 | Beige Paint | 8" to 10" | All |
| QSTX-V-12 | Platinum Vinyl | QSTX-4-12 | Gray Paint | QSTX-X-12 | Beige Paint | 10" to 12" | All |

## *Optional Accessories – Additional Items as Determined by Job Specifications*

| *Free-Blow Plenum Boxes:* | | | | | | | *Unit Compatibility* |
|---|---|---|---|---|---|---|---|
| QPB42-V | Platinum Vinyl | QPB42-4 | Gray Paint | QPB42-X | Beige Paint | Front Supply, 4-way deflection grille | QW2S, QW3S |
| QPBS42-V | Platinum Vinyl | QPBS42-4 | Gray Paint | QPBS42-X | Beige Paint | **Same as QPB42, plus 2-way defection grille on each side.** | |
| QPB48-V | Platinum Vinyl | QPB48-4 | Gray Paint | QPB48-X | Beige Paint | Front Supply, 4-way deflection grille | QW4S, QW5S |
| QPBS48-V | Platinum Vinyl | QPBS48-4 | Gray Paint | QPBS48-X | Beige Paint | **Same as QPB48, plus 2-way defection grille on each side.** | |
| ***Top Fill Systems for Finishing Plenum Boxes to Ceilings:*** | | | | | | | ***Unit Compatibility*** |
| QPBX42-9-V | Platinum Vinyl | QPBX42-9-4 | Gray Paint | QPBX42-9-X | Beige Paint | Use with QPB42 or QPBS42 (adjusts to ceilings up to 9'9") | QW2S, QW3S |
| QPBX42-10-V | Platinum Vinyl | QPBX42-10-4 | Gray Paint | QPBX42-10-X | Beige Paint | Use with QPB42 or QPBS42 (adjusts to ceilings up to 10'5") | |
| QPBX48-9-V | Platinum Vinyl | QPBX48-9-4 | Gray Paint | QPBX48-9-X | Beige Paint | Use with QPB48 or QPBS48 (adjusts to ceilings up to 9'9") | QW4S, QW5S |
| QPBX48-10-V | Platinum Vinyl | QPBX48-10-4 | Gray Paint | QPBX48-10-X | Beige Paint | Use with QPB48 or QPBS48 (adjusts to ceilings up to 10'5") | |
| ***Cabinet Extensions for Ducted Applications:*** | | | | | | | ***Unit Compatibility*** |
| QCX10A-V | Platinum Vinyl | QCX10A-4 | Gray Paint | QCX10A-X | Beige Paint | 20" height (adjusts for ceilings up to 9'7"; add QPBX42-9 for 9'7" to 10'3" finished ceiling heights) | QW2S, QW3S |
| QCX15A-V | Platinum Vinyl | QCX15A-4 | Gray Paint | QCX15A-X | Beige Paint | 20" height (adjusts for ceilings up to 9'7"; add QPBX48-9 for 9'7" to 10'3" finished ceiling heights) | QW4S, QW5S |
| ***Hot Water Coils with Plenum Boxes:*** | | | | | | | ***Unit Compatibility*** |
| QPBHW42-F-V | Platinum Vinyl | QPBHW42-F-4 | Gray Paint | QPBHW42-F-X | Beige Paint | Free blow plenum box | QW2S, QW3S |
| QPBHW48-F-V | Platinum Vinyl | QPBHW48-F-4 | Gray Paint | QPBHW48-F-X | Beige Paint | Free blow plenum box | QW4S, QW5S |
| QPBHW42-D-V | Platinum Vinyl | QPBHW42-D-4 | Gray Paint | QPBHW42-D-X | Beige Paint | Ducted plenum box | QW2S, QW3S |
| QPBHW48-D-V | Platinum Vinyl | QPBHW48-D-4 | Gray Paint | QPBHW48-D-X | Beige Paint | Ducted plenum box | QW4S, QW5S |

***NOTE:*** **The same top fill system and cabinet extensions can be used with hot water coil plenum boxes as with standard plenum boxes.**

## CIRCULATION SYSTEM DESIGN

Equipment room piping design is based on years of experience with earth coupled heat pump systems. The design eliminates most causes of system failure.

Surprisingly, the heat pump itself is rarely the cause. Most problems occur because designers and installers forget that a closed loop earth coupled heat pump system is ***not*** like a household plumbing system.

Most household water systems have more than enough water pressure either from the well pump of the municipal water system to overcome the pressure of head loss in 1/2 inch or 3/4 inch household plumbing. A closed loop earth coupled heat pump system, however, is separated from the pressure of the household supply and relies on a small, low wattage pump to circulate the water and antifreeze solution through the earth coupling, heat pump and equipment room components.

The small circulator keeps the operating costs of the system to a minimum. However, the performance of the circulator ***must*** be closely matched with the pressure of head loss of the entire system in order to provide the required flow through the heat pump. Insufficient flow through the heat exchanger is one of the most common causes of system failure. Proper system piping design and circulator selection will eliminate this problem.

Bard supplies a work sheet to simplify head loss calculations and circulator selection. Refer to "Circulating Pump Work sheet" section in manual 2100-099. Loop pump performance data can be seen in Figures 22 and 23.

## COPPER WATER COIL APPLICATION

Copper water coils are available as a factory installed option. The unit model number will indicate the coil option as the next to last character; "C" represents a water coil constructed of copper material and "N" represents a water coil constructed of cupronickel.

The cupronickel coil is suitable for all applications. **The copper coil is suitable for applications using ground loop and cooling tower only and is not recommended for open well application.**

**FIGURE 20**
**CIRCULATION SYSTEM**

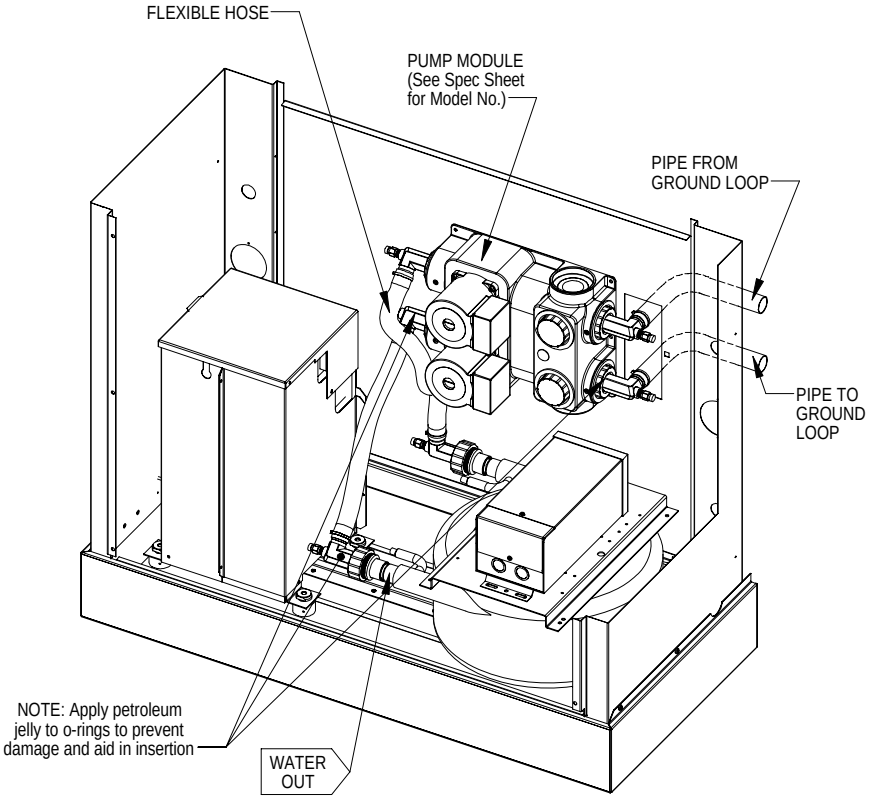


MIS-2748 A

## START UP PROCEDURE FOR CLOSED LOOP SYSTEM

1. Be sure main power to the unit is OFF at disconnect.
2. Set thermostat system switch to OFF, fan switch to AUTO.
3. Move main power disconnect to ON. Except as required for safety while servicing, ***Do not open the unit disconnect switch.***
4. Check system air flow for obstructions.
   A. Move thermostat fan switch to ON. Blower runs.
   B. Be sure all registers and grilles are open.
   C. Move thermostat fan switch to AUTO. Blowing should stop.
5. Flush, fill and pressurize the closed loop system as outlined in manual 2100-099.
6. Fully open the manual inlet and outlet valves. Start the loop pump module circulator(s) and check for proper operation. If circulator(s) are not operating, turn off power and diagnose the problem.
7. Check fluid flow using a direct reading flow meter or a single water pressure gauge, measure the pressure drop at the pressure/temperature plugs across the water coil. Compare the measurement with flow versus pressure drop table to determine the actual flow rate. If the flow rate is too low, recheck the selection of the loop pump module model for sufficient capacity. If the module selection is correct, there is probably trapped air or a restriction in the piping circuit.
8. Start the unit in cooling mode by moving the thermostat switch to cool. Fan should be set for AUTO.
9. Check the system refrigerant pressures against the cooling refrigerant pressure table in the installation manual for rated water flow and entering water temperatures. If the refrigerant pressures do not match, check for airflow problem then refrigeration system problem.
10. Switch the unit to the heating mode by moving the thermostat switch to heat. Fan should be set for AUTO.
11. Check the refrigerant system pressures against the heating refrigerant pressure table in installation manual. Once again, if they do not match, check for airflow problems and then refrigeration system problems.

*NOTE: If a charge problem is determined (high or low):*

A. Check for possible refrigerant leaks.
B. Recover all remaining refrigerant from unit and repair leak.
C. Evacuate unit down to 29 inches of vacuum
D. Recharge the unit with refrigerant by weight. This is the only way to insure a proper charge.

**FIGURE 21**
**WATER TEMPERATURE and PRESSURE PROCEDURE**

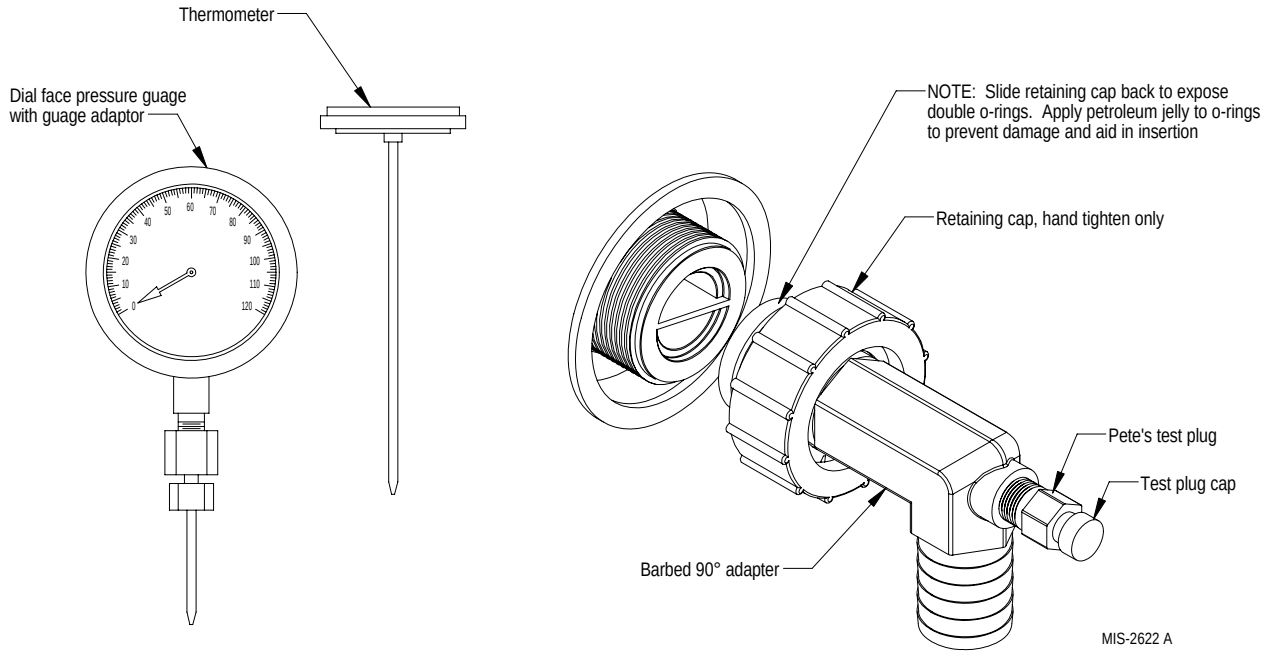

**FIGURE 22**
**PERFORMANCE MODEL DORFC-1 LOOP PUMP MODULE**

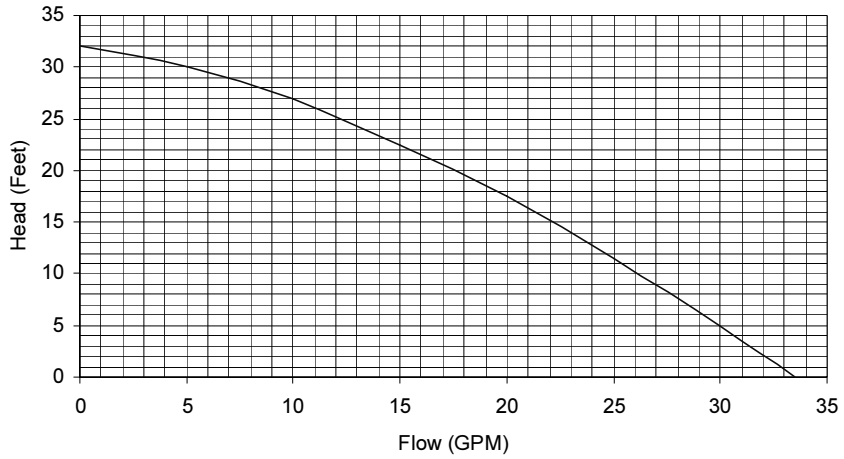


**FIGURE 23**
**PERFORMANCE MODEL DORFC-2 LOOP PUMP MODULE**

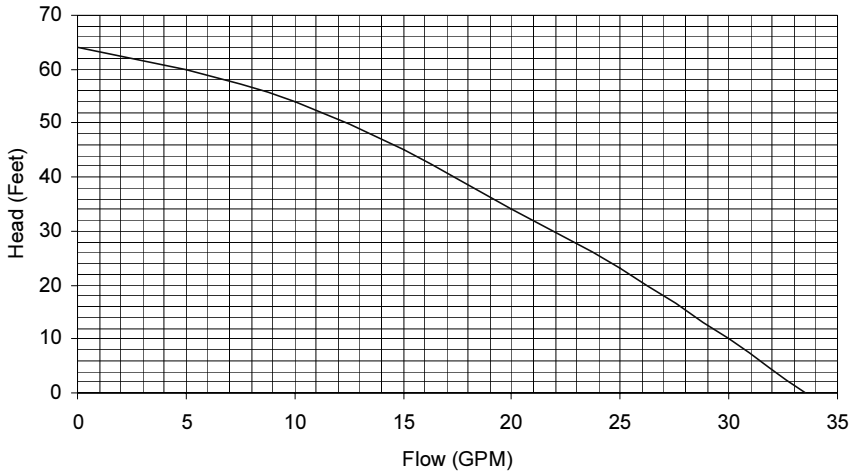

## WATER CONNECTIONS

It is very important that an adequate supply of clean, noncorrosive water at the proper pressure be provided before the installation is made. Insufficient water, in the heating mode for example, will cause the low pressure switch to trip, shutting down the heat pump. In assessing the capacity of the water system, it is advisable that the complete water system be evaluated to prevent possible lack of water or water pressure at various household fixtures whenever the heat pump turns on. All plumbing to and from the unit is to be installed in accordance with local plumbing codes. The use of plastic pipe, where permissible, is recommended to prevent electrolytic corrosion of the water pipe. Because of the relatively cold temperatures encountered with well water, it is strongly recommended that the water lines connecting the unit be insulated to prevent water droplets form condensing on the pipe surface.

Refer to piping, Figure 24. Slow closing ***Solenoid Valve (6)*** with a 24V coil provides on/off control of the water flow to the unit. Refer to the wiring diagram for correct hookup of the valve solenoid coil.

***Constant Flow Valve (7)*** provides correct flow of water to the unit regardless of variations in water pressure. Observe the water flow direction indicated by the arrow on the side of the valve body. Table 7 is a table showing the flow rate of each valve. Two constant flow rate valves may be installed in parallel to increase the flow. For example, when a 8603-007 (6 GPM) and 8603-011 (5 GPM) are installed in parallel the total flow will be 11 GPM.

**TABLE 7**
**CONSTANT FLOW VALVES**

| Part No. | Min. Available Pressure PSIG | Flow Rate GPM |
|---|---|---|
| CFV-5 | 15 ① | 5 |
| CFV-6 | 15 ① | 6 |
| CFV-7 | 15 ① | 7 |
| CFV-9 | 15 ① | 9 |

① The pressure drop through the constant flow valve will vary depending on the available pressure ahead of the valve. Unless minimum of 15 psig is available ***immediately*** ahead of the valve, no water will flow.

***Strainer (5)*** installed upstream of ***constant flow valve (7)*** to collect foreign material which would clog the flow valve orifice.

Figure 24 shows the use of ***shutoff valves (9)*** and ***(11)***, on the in and out water lines to permit isolation of the unit from the plumbing system should future service work require this. Globe valves should not be used as shutoff valves because of the excessive pressure drop inherent in the valve design. Instead use gate or ball valves as shut-offs so as to minimize pressure drop.

***Drain cock (8)*** and ***(10)***, and tees have been included to permit acid cleaning the refrigerant-to-water coil should such cleaning be required. See WATER CORROSION section.

***Drain cock (12)*** provides access to the system to check water flow through the constant flow valve to insure adequate water flow through the unit. A water meter is used to check the water flow rate.

**FIGURE 24**
**PIPING DIAGRAM**

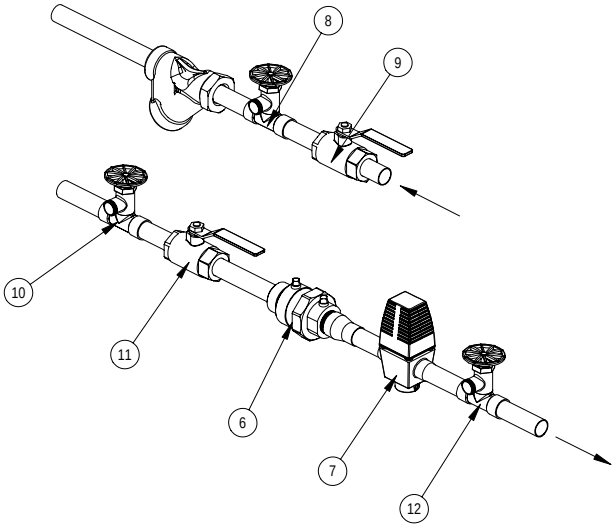

## WELL PUMP SIZING

Strictly speaking, sizing the well pump is the responsibility of the well drilling contractor. It is important, however, that the HVAC contractor be familiar with the factors that determine what size pump will be required. Rule of thumb estimates will invariably lead to under or oversized well pumps. Undersizing the pump will result in inadequate water to the whole plumbing system but with especially bad results to the heat pump – NO HEAT / NO COOL calls will result. Oversized pumps will short cycle and could cause premature pump motor or switch failures.

The well pump must be capable of supplying enough water and at an adequate pressure to meet competing demands of water fixtures. The well pump must be sized in such a way that three requirements are met:

1. Adequate flow rate in GPM.
2. Adequate pressure at the fixture.
3. Able to meet the above from the depth of the well-feet of lift.

The pressure requirements put on the pump are directly affected by the diameter of pipe being used, as well as, by the water flow rate through the pipe. The work sheet included in manual 2110-078 should guarantee that the well pump has enough capacity. It should also ensure that the piping is not undersized which would create too much pressure due to friction loss. High pressure losses due to undersized pipe will reduce efficiency and require larger pumps and could also create water noise problems.

## SYSTEM START UP PROCEDURE FOR OPEN LOOP APPLICATIONS

1. Be sure main power to the unit is OFF at disconnect.
2. Set thermostat system switch to OFF, fan switch to AUTO.
3. Move main power disconnect to ON. Except as required for safety while servicing – ***do not open the unit disconnect switch.***
4. Check system airflow for obstructions.
   A. Move thermostat fan switch to ON. Blower runs.
   B. Be sure all registers and grilles are open.
   C. Move thermostat fan switch to AUTO. Blower should stop.
5. Fully open the manual inlet and outlet valves.
6. Check water flow.
   A. Connect a water flow meter to the drain cock between the constant flow valve and the solenoid valve. Run a hose from the flow meter to a drain or sink. Open the drain cock.
   B. Check the water flow rate through constant flow valve to be sure it is the same as the unit is rated for.
   C. When water flow is okay, close drain cock and remove the water flow meter. The unit is now ready to start.
7. Start the unit in cooling mode by moving the thermostat switch to cool. Fan should be set for AUTO.
   A. Check to see the solenoid valve opened.
8. Check the system refrigerant pressures against the cooling refrigerant pressure table in the installation manual for rated water flow and entering water temperatures. If the refrigerant pressures do not match, check for airflow problem that refrigeration system problem.
9. Switch the unit to the heat mode by moving the thermostat switch to heat. Fan should be set for AUTO.
   A. Check to see the solenoid valve opened again.
10. Check the refrigerant system pressures against the heating refrigerant pressure table in installation manual. Once again, if they do not match, check for air flow problems and then refrigeration system problems.

*NOTE: If a charge problem is determined (high or low):*

A. Check for possible refrigerant loss.
B. Recover all remaining refrigerant from unit and repair leak.
C. Evacuate unit down to 29 inches of vacuum.
D. Recharge the unit with refrigerant by weight. This is the only way to insure proper charge.

## WATER CORROSION

Two concerns will immediately come to light when considering a water source heat pump, whether for ground water or for a closed loop application: Will there be enough water? And, how will the water quality affect the system?

Water quantity is an important consideration and one which is easily determined. The well driller must perform a pump down test on the well according to methods described by the Nation Well Water Association. This test, if performed correctly, will provide information on the rate of low and on the capacity of the well. It is important to consider the overall capacity of the well when thinking about a water source heat pump because the heat pump may be required to run for extended periods of time.

The second concern, about water quality, is equally important. Generally speaking, if the water is not offensive for drinking purposes, it should pose no problem for the heat pump. The well driller or local water softening company can perform tests which will determine the chemical properties of the well water.

Water quality problems will show up in the heat pump in one of more of the following ways:

1. Decrease in water flow through the unit.
2. Decreased heat transfer of the water coil (entering to leaving water temperature difference is less).

There are four main water quality problems associated with ground water. These are:

1. ***Biological Growth.*** This is the growth of microscopic organisms in the water and will show up as a slimy deposit throughout the water system. Shock treatment of the well is usually required and this is best left up to the well driller. The treatment consists of injecting chlorine into the well casing and flushing the system until all growth is removed.
2. **Suspended Particles in the Water.** Filtering will usually remove most suspended particles (fine sand, small gravel) from the water. The problem with suspended particles in the water is that it will erode metal parts, pumps, heat transfer coils, etc. So long as the filter is cleaned and periodically maintained, suspended particles should pose no serious problem. Consult with your well driller.
3. **Corrosion of Metal.** Corrosion of metal parts results from either highly corrosive water (acid water, generally not the case with ground water) of galvanic reaction between dissimilar metals in the presence of water. By using plastic plumbing or dielectric unions galvanic reaction is eliminated. The use of corrosion resistant materials (such as the Cupronickel coil) through the water system will reduce corrosion problems significantly.
4. **Scale Formation.** Of all the water problems, the formation of scale by ground water is by far the most common. Usually this scale is due to the formation of calcium carbonate, but magnesium carbonate or calcium sulfate may also be present. Carbon dioxide gas ($CO_2$), the carbonate of calcium and magnesium carbonate, is very soluble in water. It will remain dissolved in the water until some outside factor upsets the balance. This outside influence may be a large change in water temperature or pressure. When this happens, enough carbon dioxide gas combines with dissolved calcium or magnesium in the water and falls out of solution until a new balance is reached. The change in temperature that this heat pump produces is usually not high enough to cause the dissolved gas to fall out of solution. Likewise, if pressure drops are kept to a reasonable level, no precipitation of carbon dioxide should occur.

## REMEDIES OF WATER PROBLEMS

**Water Treatment.** Water treatment can usually be economically justified for close loop systems. However, because of the large amounts of water involved with a ground water heat pump, water treatment is generally too expensive.

**Acid Cleaning the Water Coil or Heat Pump Recovery Unit.** If scaling of the coil is strongly suspected, the coil can be cleaned up with a solution of Phosphoric Acid (food grade acid). Follow the manufacturer's directions for mixing, use, etc. Refer to the "Cleaning Water Coil", Figure 25. The acid solution can be introduced into the heat pump coil through the hose bib A. Be sure the isolation valves are closed to prevent contamination of the rest of the system by the coil. The acid should be pumped from a bucket into the hose bib and returned to the bucket through the other hose bib B. Follow the manufacturer's directions for the product used as to how long the solution is to be circulated, but it is usually circulated for a period of several hours.

**FIGURE 25**
**CLEANING WATER COIL**

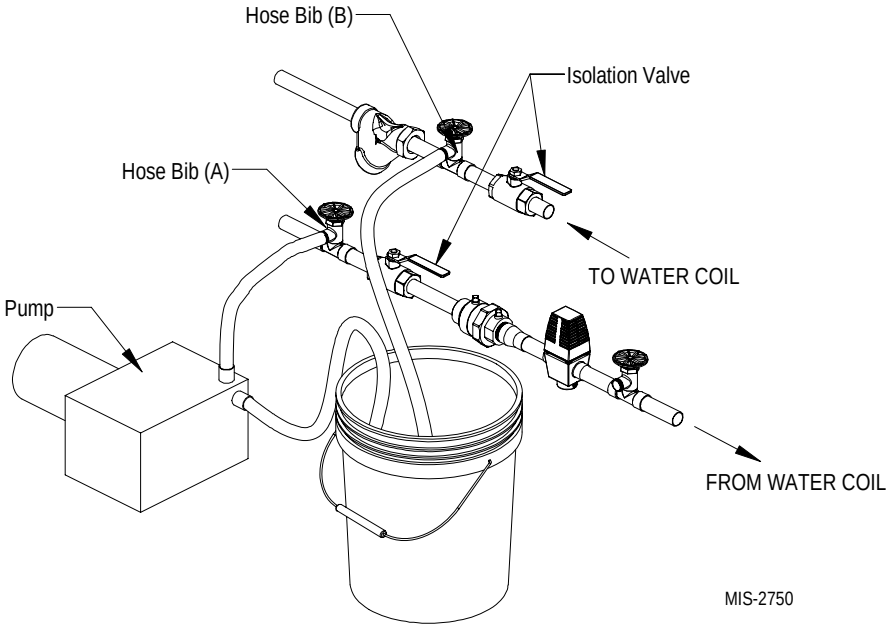


## LAKE AND POND INSTALLATIONS

Lakes and ponds can provide a low cost source of water for heating and cooling with a ground water heat pump. Direct usage of the water without some filtration is not recommended as algae and turbid water can foul the water to freon heat exchanger. Instead, there have been very good results using a dry well dug next to the water line or edge. Normal procedure in installing a dry well is to backhoe a 15 to 20 foot hole adjacent to the body of water (set backhoe as close to the water's edge as possible). Once excavated, a perforated plastic casing should be installed with gravel backfill placed around the casing. The gravel bed should provide adequate filtration of the water to allow good performance of the ground water heat pump.

The following is a list of recommendations to follow when installing this type of system (Refer to Figure 26):

A. A lake or pond should be at least 1 acre (40,000 a square feet) in surface area for each 50,000 BTUs of ground water heat pump capacity or have 2 times the cubic feet size of the dwelling that you are trying to heat (includes basement if heated).

B. The average water depth should be a least 4 feet and there should be an area where the water depth is at least 12 to 15 feet deep.

C. If possible, use a submersible pump suspended in the dry well casing. Jet pumps and other types of suction pumps normally consume more electrical energy than similarly sized submersible pumps. Pipe the unit the same as a water well system.

D. Size the pump to provide necessary GPM for the ground water heat pump. A 12 GPM or greater water flow rate is required on all modes when used on this type system.

E. A pressure tank should be installed in dwelling to be heated adjacent to the ground water heat pump. A pressure switch should be installed at the tank for pump control.

F. All plumbing should be carefully sized to compensate for friction losses, etc., particularly if the pond or lake is over 200 feet from the dwelling to be heated or cooled.

G. Keep all water lines below low water level and below the frost line.

H. Most installers use 4-inch filed tile (rigid plastic or corrugated) for water return to the lake or pond.

I. The drain line discharge should be located at least 100 feet from the dry well location.

J. The drain line should be installed with a slope of 2 inches per 10 feet of run to provide complete drainage of the line when the ground water heat pump is not operating. This gradient should also help prevent freezing of the discharge where the pipe terminates above the frost line.

K. Locate the discharge high enough above high water level so the water will not back up and freeze inside the drain pipe.

L. Where the local conditions prevent the use of a gravity drainage system to a lake or pond, you can instead run standard plastic piping out into the pond below the frost and low water level.

**FIGURE 26**
**WATER WELL SYSTEM**

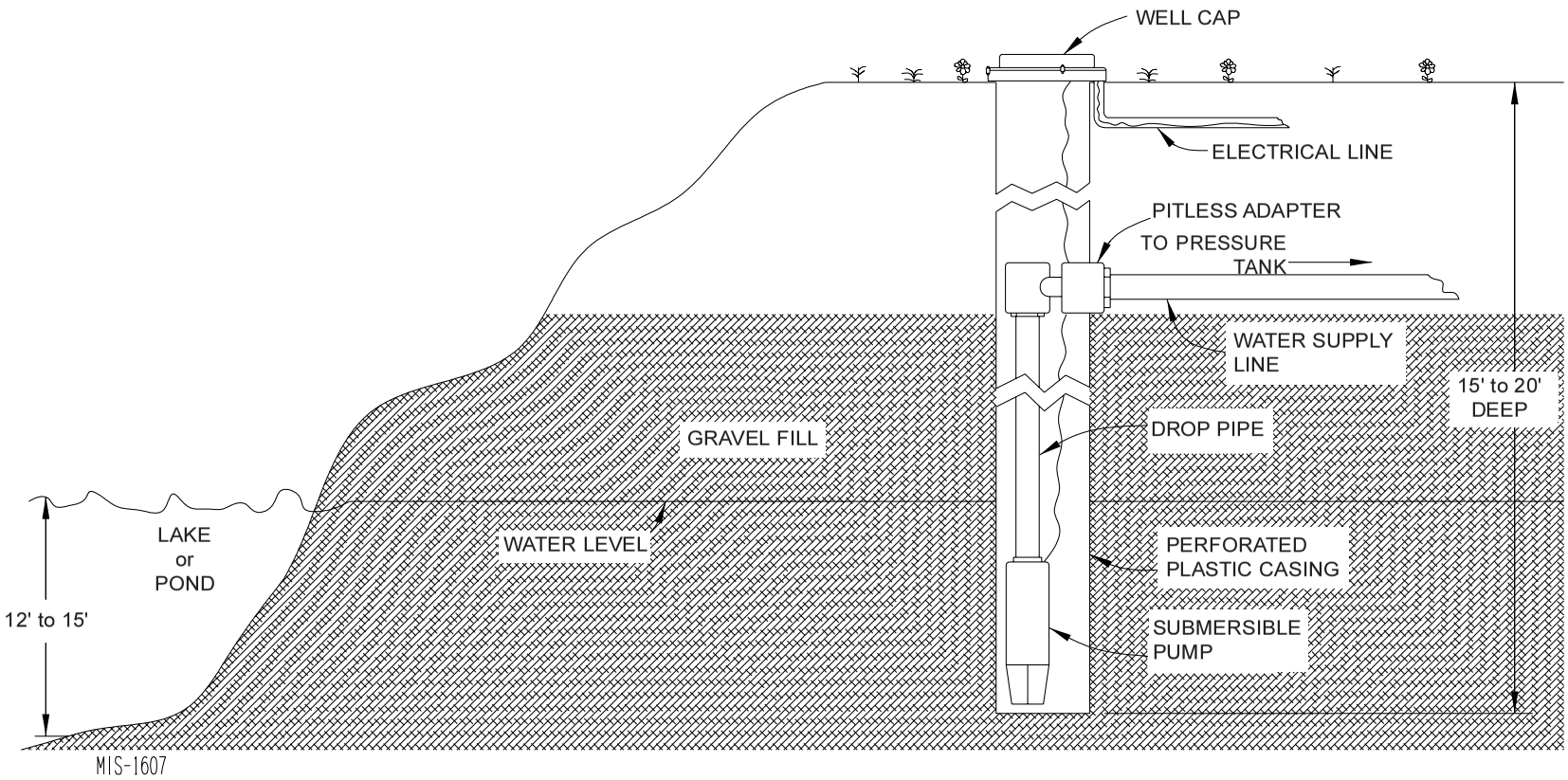

**⚠ WARNING**

Thin ice may result in the vicinity of the discharge line.

For complete information on water well systems and lake and pond applications, refer to Manual 2100-078 available from your distributor.

## COOLING TOWER / BOILER APPLICATION

The cooling tower and boiler water loop temperature is usually maintained between 50°F to 100°F to assure adequate cooling and heating performance.

In the cooling mode, heat is rejected from the unit into the source water loop. A cooling tower provides evaporative cooling to the loop water thus maintaining a constant supply temperature to the unit. When utilizing open cooling towers chemical water treatment is mandatory to ensure the water is free from corrosive minerals.

It is imperative that all air be eliminated from the source closed loop side of the heat exchanger to insure against fouling.

In the heating mode, heat is absorbed from the source water loop. A boiler can be utilized to maintain the loop at the desired temperature. In milder climates a "flooded tower" concept is often used. This concept involves adding makeup water to the cooling tower sump to maintain the desired loop temperature.

**⚠ CAUTION**

Water piping exposed to extreme low ambient temperatures are subject to freezing.

Units are equipped with double O-ring (female pipe thread) fittings. Consult the specification sheets for sizes. Teflon tape sealer should be used when connection to the unit to insure against leaks and possible condenser fouling. Do not overtighten the connections. Flexible hoses should be used between the unit and the rigid system to avoid possible vibration. Ball valves should be installed in the supply and return lines for unit isolation and unit water flow rate balancing.

Pressure / temperature ports are recommended in both supply and return lines for system flow balancing. Water flow can be accurately set by measuring the refrigerant to water heat exchangers water side pressure drop. See Table 8 for water flow and pressure drop information.

**TABLE 8**
**WATER FLOW AND PRESSURE DROP**

| | QW2S1 & QW3S1 | | QW4S1 | | QW6S1 | |
|---|---|---|---|---|---|---|
| GPM | PSIG | Ft. Hd. | PSIG | Ft. Hd. | PSIG | Ft. Hd. |
| 3 | 0.1 | 0.23 | | | | |
| 4 | 0.5 | 1.15 | 0.9 | 2.08 | | |
| 5 | 1.2 | 2.77 | 1.4 | 3.23 | | |
| 6 | 1.7 | 3.92 | 2.3 | 5.31 | | |
| 7 | 2.3 | 5.31 | 3.2 | 7.38 | 2 | 4.61 |
| 8 | 3.1 | 7.15 | 4.1 | 9.46 | 2.5 | 5.77 |
| 9 | 4.1 | 9.46 | 5.1 | 11.77 | 3.2 | 7.38 |
| 10 | | | 6.1 | 14.07 | 3.9 | 9.00 |
| 11 | | | 7.1 | 16.38 | 4.7 | 10.84 |
| 12 | | | 8.2 | 18.92 | 5.5 | 12.69 |
| 13 | | | 9.4 | 21.69 | 6.4 | 14.76 |
| 14 | | | 10.6 | 24.45 | 7.3 | 16.84 |
| 15 | | | | | 8.1 | 18.69 |
| 16 | | | | | 9 | 20.76 |
| 17 | | | | | 9.9 | 22.84 |
| 18 | | | | | | |

**FIGURE 27**
**WATER SOURCE HEAT PUMP**

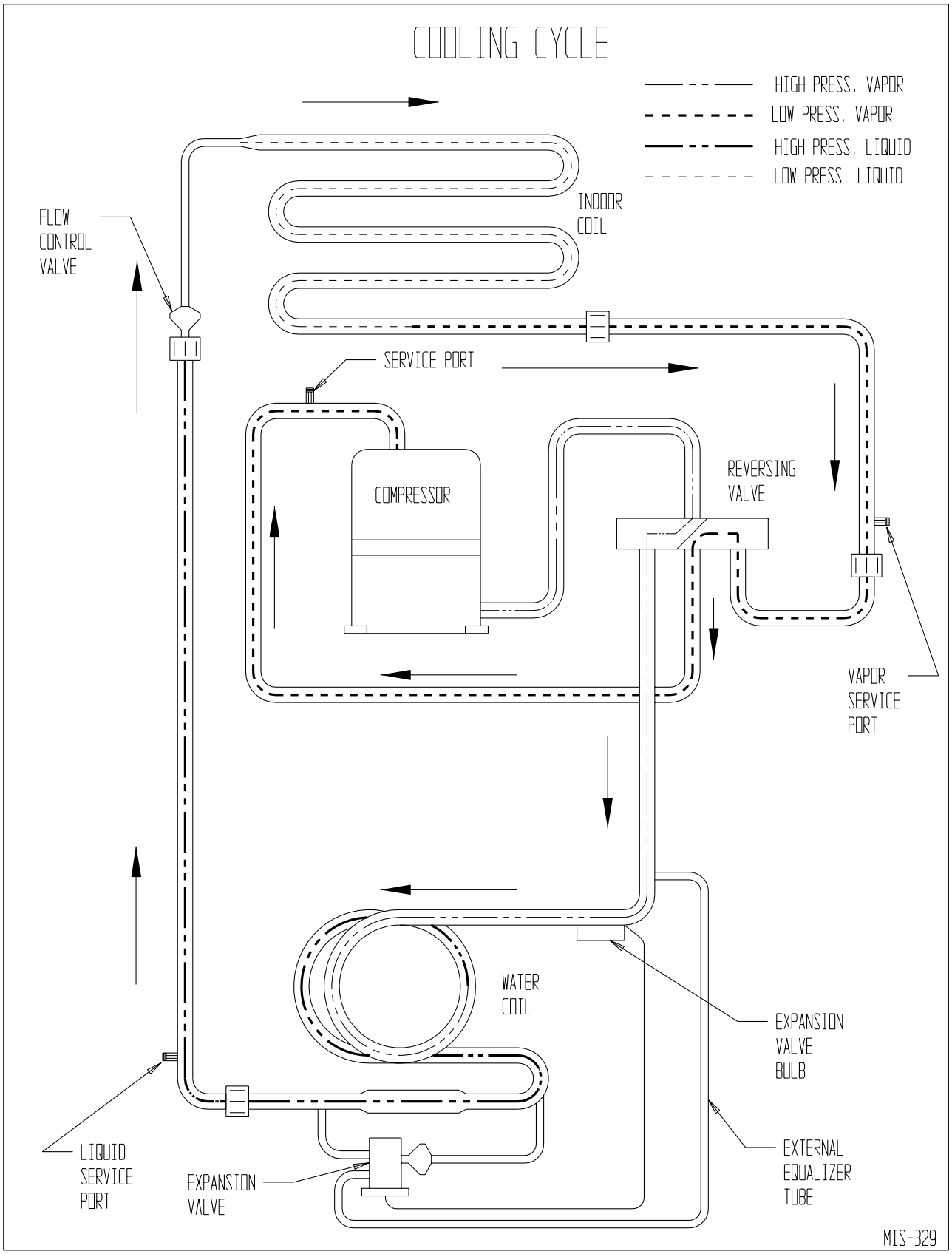

**FIGURE 28**
**WATER SOURCE HEAT PUMP**

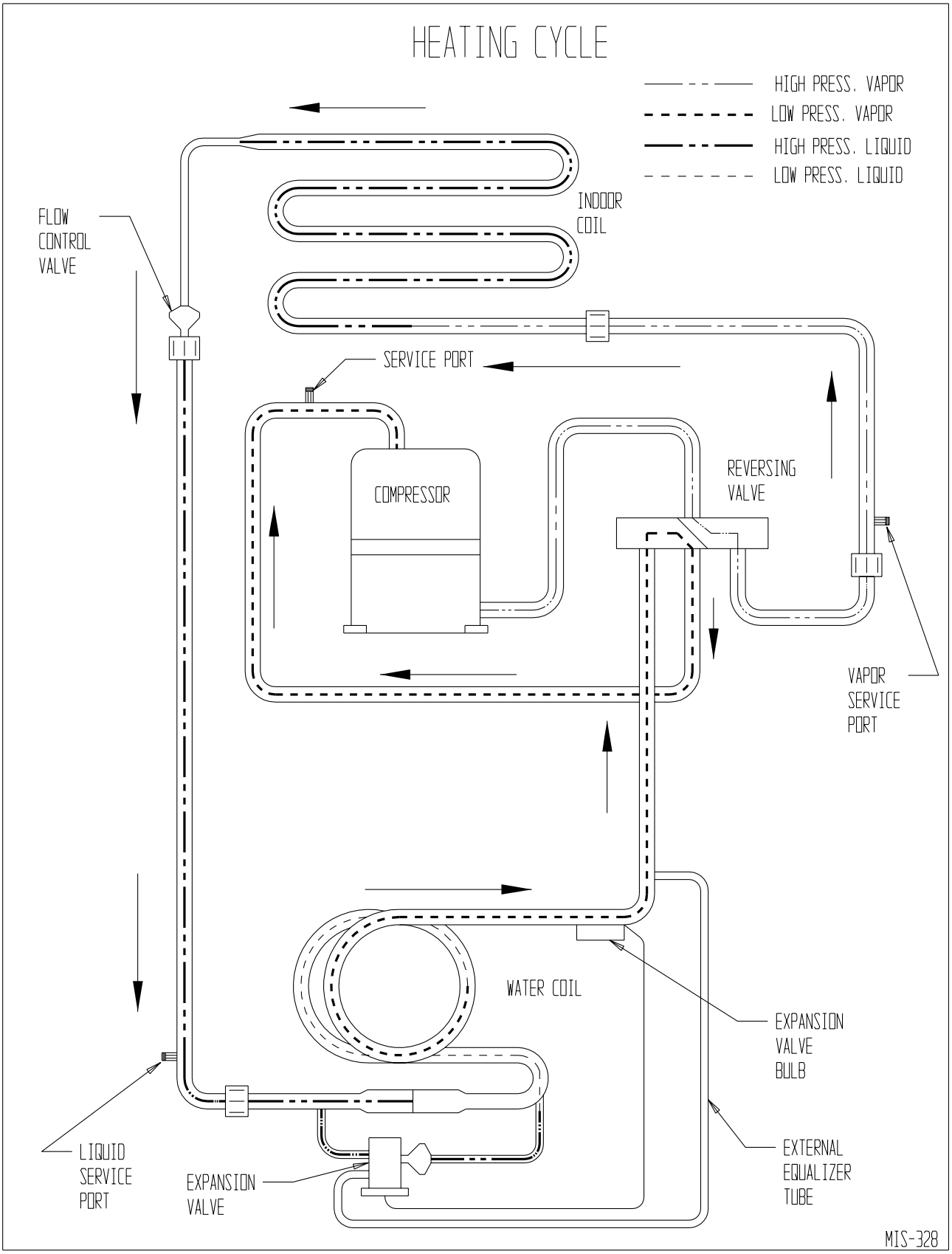

## UNBRAZING SYSTEM COMPONENTS

If the refrigerant charge is removed from a scroll equipped unit by bleeding the high side only, it is sometimes possible for the scrolls to seal, preventing pressure equalization through the compressor. This may leave low side shell and suction line tubing pressurized. If the brazing torch is then applied to the low side while the low side shell and suction line contains pressure, the pressurized refrigerant and oil mixture could ignite when it escapes and contacts the brazing flame. To prevent this occurrence, it is important to check both the high and low side with manifold gauges before unbrazing.

**⚠ WARNING**

Both the high and low side of the scroll compressor must be checked with manifold gauges before unbrazing system components. Failure to do so could cause pressurized refrigerant and oil mixture to ignite if it escapes and contacts the brazing flame causing property damage, bodily harm or death.

# TROUBLESHOOTING GE ECM™ MOTORS

**CAUTION:**

Disconnect power from unit before removing or replacing connectors, or servicing motor. To avoid electric shock from the motor's capacitors, disconnect power and wait at least 5 minutes before opening motor.

| Symptom | Cause/Procedure |
|---|---|
| **Motor rocks slightly when starting** | • This is normal start-up for ECM |
| **Motor won't start**<br>• No movement | • Check blower turns by hand<br>• Check power at motor<br>• Check low voltage (24 Vac R to C) at motor<br>• Check low voltage connections (G, Y, W, R, C) at motor<br>• Check for unseated pins in connectors on motor harness<br>• Test with a temporary jumper between R - G<br>• Check motor for tight shaft<br>• Perform motor/control replacement check<br>• **Perform Moisture Check** |
| • Motor rocks, but won't start | • Check for loose or compliant motor mount<br>• Make sure blower wheel is tight on shaft<br>• Perform motor/control replacement check |
| **Motor oscillates up & down while being tested off of blower** | • It is normal for motor to oscillate with no load on shaft |
| **Motor starts, but runs erratically**<br>• Varies up and down or intermittent | • Check line voltage for variation or "sag"<br>• Check low voltage connections (G, Y, W, R, C) at motor, unseated pins in motor harness connectors<br>• Check "Bk" for erratic CFM command (in variable-speed applications)<br>• Check out system controls, Thermostat<br>• **Perform Moisture Check** |
| • "Hunts" or "puffs" at high CFM (speed) | • Does removing panel or filter reduce "puffing"?<br>- Reduce restriction<br>- Reduce max airflow |
| • Stays at low CFM despite system call for cool or heat CFM | • Check low voltage (Thermostat) wires and connections<br>• Verify fan is not in delay mode; wait until delay complete<br>• "R" missing/not connected at motor<br>• Perform motor/control replacement check |
| • Stays at high CFM | • "R" missing/not connected at motor<br>• Is fan in delay mode? - wait until delay time complete<br>• Perform motor/control replacement check |
| • Blower won't shut off | • Current leakage from controls into G, Y or W? Check for Triac switched thermostat or solid-state relay |
| **Excessive noise**<br>• Air noise | • Determine if it's air noise, cabinet, duct or motor noise; interview customer, if necessary<br>• High static creating high blower speed?<br>- Is airflow set properly?<br>- Does removing filter cause blower to slow down? Check filter<br>- Use low-pressure drop filter<br>- Check/correct duct restrictions |

| Symptom | Cause/Procedure |
|---|---|
| • Noisy blower or cabinet | • Check for loose blower housing, panels, etc.<br>• High static creating high blower speed?<br>- Check for air whistling through seams in ducts, cabinets or panels<br>- Check for cabinet/duct deformation |
| • "Hunts" or "puffs" at high CFM (speed) | • Does removing panel or filter reduce "puffing"?<br>- Reduce restriction<br>- Reduce max. airflow |
| **Evidence of Moisture**<br>• Motor failure or malfunction has occurred and moisture is present | • Replace motor and **Perform Moisture Check** |
| • Evidence of moisture present inside air mover | • **Perform Moisture Check** |

| Do | Don't |
|---|---|
| • Check out motor, controls, wiring and connections thoroughly before replacing motor | • Automatically assume the motor is bad. |
| • Orient connectors down so water can't get in<br>- Install "drip loops" | • Locate connectors above 7 and 4 o'clock positions |
| • Use authorized motor and model #'s for replacement | • Replace one motor or control model # with another (unless an authorized replacement) |
| • Keep static pressure to a minimum:<br>- Recommend high efficiency, low static filters<br>- Recommend keeping filters clean.<br>- Design ductwork for min. static, max. comfort<br>- Look for and recommend ductwork improvement, where necessary | • Use high pressure drop filters some have ½" H20 drop!<br>• Use restricted returns |
| • Size the equipment wisely | • Oversize system, then compensate with low airflow |
| • Check orientation before inserting motor connectors | • Plug in power connector backwards<br>• Force plugs |

## Moisture Check

- Connectors are oriented "down" (or as recommended by equipment manufacturer)
- Arrange harness with "drip loop" under motor
- Is condensate drain plugged?
- Check for low airflow (too much latent capacity)
- Check for undercharged condition
- Check and plug leaks in return ducts, cabinet

## Comfort Check

- Check proper airflow settings
- Low static pressure for lowest noise
- Set low continuous-fan CFM
- Use humidistat and 2-speed cooling units
- Use zoning controls designed for ECM that regulate CFM
- Thermostat in bad location?

## Replacing ECM Control Module

To replace the control module for the GE variable-speed indoor blower motor you need to take the following steps:

1. You MUST have the correct replacement module. The controls are factory programmed for specific operating modes. Even though they look alike, different modules may have completely different functionality.

**USING THE WRONG CONTROL MODULE VOIDS ALL PRODUCT WARRANTIES AND MAY PRODUCE UNEXPECTED RESULTS.**

2. Begin by removing AC power from the furnace or air handler being serviced. **DO NOT WORK ON THE MOTOR WITH AC POWER APPLIED.** To avoid electric shock from the motor's capacitors, disconnect power and wait at least 5 minutes before opening motor.

3. It is usually not necessary to remove the motor from the blower assembly. However, it is recommended that the whole blower assembly, with the motor, be removed from the furnace/air handler. (Follow the manufacturer's procedures). Unplug the two cable connectors to the motor. There are latches on each connector. **DO NOT PULL ON THE WIRES.** The plugs remove easily when properly released.

4. Locate the two standard ¼" hex head bolts at the rear of the control housing (at the back end of the control opposite the shaft end). *Refer to Figure 29.* Remove these two bolts from the motor and control assembly while holding the motor in a way that will prevent the motor or control from falling when the bolts are removed. If an ECM2.0 control is being replaced (recognized by an aluminum casting rather that a deep-drawn black steel can housing the electronics), remove only the hex-head bolts. **DO NOT REMOVE THE TORX-HEAD SCREWS.**

5. The control module is now free of mechanical attachment to the motor endshield but is still connected by a plug and three wires inside the control. Carefully rotate the control to gain access to the plug at the control end of the wires. With thumb and forefinger, reach the latch holding the plug to the control and release it by squeezing the latch tab and the opposite side of the connector plug and gently pulling the plug out of the connector socket in the control. **DO NOT PULL ON THE WIRES. GRIP THE PLUG ONLY.**

6. The control module is now completely detached from the motor. Verify with a standard ohmmeter that the resistance from each motor lead (in the motor plug just removed) to the motor shell is >100K ohms. *Refer to Figure 30.* (Measure to unpainted motor end plate.) If any motor lead fails this test, do not proceed to install the control module. **THE MOTOR IS DEFECTIVE AND MUST BE REPLACED.** Installing the new control module will cause it to fail also.

7. Verify that the replacement control is correct for your application. Refer to the manufacturer's authorized replacement list. **USING THE WRONG CONTROL WILL RESULT IN IMPROPER OR NO BLOWER OPERATION.** Orient the control module so that the 3-wire motor plug can be inserted into the socket in the control. Carefully insert the plug and press it into the socket until it latches. **A SLIGHT CLICK WILL BE HEARD WHEN PROPERLY INSERTED.** Finish installing the replacement control per one of the three following paragraphs, 8a, 8b or 8c.

8a. **IF REPLACING AN ECM 2.0 CONTROL** (control in cast aluminum can with air vents on the back of the can) **WITH AN ECM 2.3 CONTROL** (control containing black potting for water protection in black deep-drawn steel case with no vents in the bottom of the can), locate the two through-bolts and plastic tab that are packed with the replacement control. Insert the plastic tab into the slot at the perimeter of the open end of the can so that the pin is located on the inside of the perimeter of the can. Rotate the can so that the tab inserts into the tab locater hole in the endshield of the motor. Using the two through-bolts provided with the replacement control, reattach the can to the motor.

**THE TWO THROUGH-BOLTS PROVIDED WITH THE REPLACEMENT ECM 2.3 CONTROL ARE SHORTER THAN THE BOLTS ORIGINALLY REMOVED FROM THE ECM 2.0 CONTROL AND MUST BE USED IF SECURE ATTACHMENT OF THE CONTROL TO THE MOTOR IS TO BE ACHIEVED. *DO NOT OVERTIGHTEN THE BOLTS.***

8b. **IF REPLACING AN ECM 2.3 CONTROL WITH AN ECM 2.3 CONTROL**, the plastic tab and shorter through-bolts are not needed. The control can be oriented in two positions 180° apart. **MAKE SURE THE ORIENTATION YOU SELECT FOR REPLACING THE CONTROL ASSURES THE CONTROL'S CABLE CONNECTORS WILL BE LOCATED DOWNWARD IN THE APPLICATION SO THAT WATER CANNOT RUN DOWN THE CABLES AND INTO THE CONTROL.** Simply orient the new control to the motor's endshield, insert bolts, and tighten. ***DO NOT OVERTIGHTEN THE BOLTS.***

8c. **IF REPLACING AN ECM 2.0 CONTROL WITH AN ECM 2.0 CONTROL** *(It is recommended that ECM 2.3 controls be used for all replacements),* the new control must be attached to the motor using through bolts identical to those removed with the original control. ***DO NOT OVERTIGHTEN THE BOLTS.***

9. Reinstall the blower/motor assembly into the HVAC equipment. Follow the manufacturer's suggested procedures.

10. Plug the 16-pin control plug into the motor. The plug is keyed. Make sure the connector is properly seated and latched.

11. Plug the 5-pin power connector into the motor. Even though the plug is keyed, **OBSERVE THE PROPER ORIENTATION. DO NOT FORCE THE CONNECTOR.** It plugs in very easily when properly oriented. **REVERSING THIS PLUG WILL CAUSE IMMEDIATE FAILURE OF THE CONTROL MODULE.**

12. Final installation check. Make sure the motor is installed as follows:

a. Unit is as far INTO the blower housing as possible.
b. Belly bands are not on the control module or covering vent holes.
c. Motor connectors should be oriented between the 4 o'clock and 8 o'clock positions when the blower is positioned in its final location and orientation.
d. Add a drip loop to the cables so that water cannot enter the motor by draining down the cables. *Refer to Figure 31.*

The installation is now complete. Reapply the AC power to the HVAC equipment and verify that the new motor control module is working properly. Follow the manufacturer's procedures for disposition of the old control module.

Figure 29
Control Disassembly

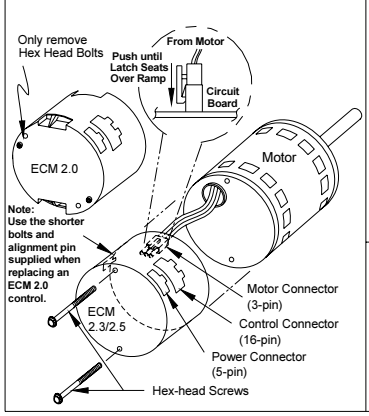


Figure 30
Winding Test

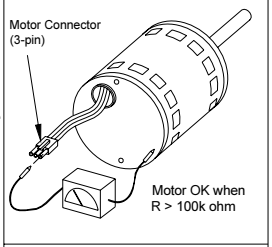


Figure 31
Drip Loop

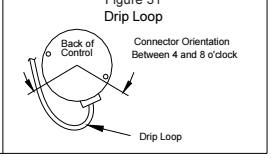

# QUICK REFERENCE TROUBLESHOOTING CHART FOR WATER TO AIR HEAT PUMP

● DENOTES COMMON CAUSE
✕ DENOTES OCCASIONAL CAUSE

| | | POWER SUPPLY | | | | | | | | | | | | | | | | | | WATER COIL SECTION | | | | | | | | | | | | | | | | | | | | | | INDOOR SECTION | | | | | | AUX. | |
|---|---|---|---|---|---|---|---|---|---|---|---|---|---|---|---|---|---|---|---|---|---|---|---|---|---|---|---|---|---|---|---|---|---|---|---|---|---|---|---|---|---|---|---|---|---|---|---|---|---|
| | | Line Voltage | | | | | | | | | | Control Circuit | | | | | | | | Compressor | | | | Refrigerant System | | | | | | | | Water Solenoid | | | Rev. Valve | | Water Coil | | | | | | Indoor Blower Motor and Coil | | | | | | Heat | Gen. |
| | | Power Failure | Blown Fuse or Tripped Breaker | Faulty Wiring | Loose Terminals | Low Voltage | Defective Contacts in Contactor | Compressor Overload | Potential Relay | Run Capacitor | Start Capacitor | Faulty Wiring | Loose Terminals | Control Transformer | Low Voltage | Thermostat | Contactor Coil | Pressure Controls (High or Low) | Indoor Blower Relay | Discharge Line Hitting Inside of Shell | Bearings Defective | Seized | Valve Defective | Motor Wingings Defective | Refrigerant Charge Low | Refrigerant Overcharge | High Head Pressure | Low Head Pressure | High Suction Pressure | Low Suction Pressure | Non-Condensables | Unequalized Pressures | Solenoid Valve Stuck Closed (Htg) | Solenoid Valve Stuck Closed (Clg) | Solenoid Valve Stuck Open (Htg or Clg) | Leaking | Defective Valve or Coil | Plugged or Restricted Metering Device (Htg) | Scaled or Plugged Coil (Htg) | Scaled or Plugged Coil (CLg) | Water Volume Low (Htg) | Water Volume Low (Clg) | Low Water Temperature (Htg) | Plugged or Restricted Metering Device (Clg) | Fins Dirty or Plugged | Motor Winding Defective | Air Volume Low | Air Filters Dirty | Undersized or Restricted Ductwork | Auxillary Heat Upstream of Coil | |
| Heating or Cooling Cycles | Compressor Will Not Run No Power at Contactor | ● | ● | ● | ● | | + | + | | | | ● | ● | ● | + | + | ● | ● | | | | | | | | | | | | | | | | | | | | | | | | | | | | | | | | |
| | Compressor Will Not Run Power at Contactor | | | ● | ● | ● | | ● | ● | ● | ● | | | | | | | | | | + | ● | | ● | | | | | | | | ● | | | | | | | | | | | | | | | | | | |
| | Compressor "Hums" But Will Not Start | | | ● | ● | ● | + | | ● | ● | ● | | | | | | | | | | ● | ● | | ● | | | | | | | | ● | | | | | | | | | | | | | | | | | | |
| | Compressor Cycles on Overload | | | ● | ● | ● | + | ● | ● | ● | ● | | | | | | | | | | + | | + | + | ● | ● | + | | + | | ● | | | | | + | | | + | + | + | + | | | + | + | + | ● | + | | |
| | Thermostat Check Light Lite-Lockout Relay | | | | | | | | | | | | | | | | | ● | | | | | | | | | | | | | | | | | | | | | | | | | | | | | | | | |
| | Compressor Off on High Pressure Control | | | | | | | | | | | | | | | | | + | ● | | | | | | | ● | | | | | ● | | | ● | | | | + | | + | | ● | | + | ● | ● | ● | ● | ● | ● | |
| | Compressor Off on Low Pressure Control | | | | | | | | | | | | | | | | | | + | | | | | | ● | | | ● | | ● | | | ● | | | | | | + | | ● | | + | ● | | | | | | | |
| | Compressor Noisy | | | | | | | | | | | | | | | | | | | + | + | ● | | | | | | | | | | | | | | | | | | | | | | | | | | | | | |
| | Head Pressure Too High | | | | | | | | | | | | | | | | | | | | | | | | | ● | | | | | ● | | | ● | | | + | + | | ● | | ● | | + | + | + | ● | ● | + | ● | |
| | Head Pressure Too Low | | | | | | | | | | | | | | | | | | | | | | ● | | ● | | | | | ● | | | + | | | + | | | ● | | ● | | ● | | | | | | | | |
| | Suction Pressure Too High | | | | | | | | | | | | | | | | | | | | | | ● | | | ● | ● | | | | | | | | | + | | | | | | | | | | | | | | | |
| | Suction Pressure Too Low | | | | | | | | | | | | | | | | | | | | | | | | ● | | | + | | | | | ● | | | | | + | ● | | ● | | + | + | ● | + | ● | ● | + | | |
| | I.D. Blower Will Not Start | ● | ● | ● | ● | | | | | | | ● | ● | ● | + | + | | | ● | | | | | | | | | | | | | | | | | | | | | | | | | | | | | | | | |
| | I.D. Coil Frosting or Icing | | | | | | | | | | | | | | | | | | | | | | | | ● | | | | | ● | | | | | | | | | | | | | | + | ● | ● | ● | ● | + | | |
| | High Compressor Amps | | | | | ● | | | | ● | | | | | | | | | | | ● | ● | | + | | ● | ● | | ● | | ● | | | | | | | + | | ● | | ● | | + | ● | ● | ● | ● | + | + | |
| | Excessive Water Usage | | | | | | | | | | | | | | | | | | | | | | | | | | | | | | | | | | ● | | | + | + | | | | | | | | | | | |
| Cooling Cycle | Compressor Runs Continuously – No Cooling | | | | | | | | | | | | | | | | | | | | | | ● | | ● | | | | | ● | | | | | | | | | | + | | + | | + | ● | ● | ● | ● | + | | |
| | Liquid Refrigerant Flooding Back To Compressor | | | | | | | | | | | | | | | | | | | | | | | | | ● | ● | | | | | | | | | | | | | | | | | | ● | ● | ● | ● | + | | |
| Heating Cycle | Compressor Runs Continuously – No Heating | | | | | | | | | | | | | | | | | | | | | | ● | | ● | | | | | ● | | | ● | | | + | | + | ● | | ● | | + | | | | | | | | |
| | Reversing Valve Does Not Shift | | | ● | ● | | | | | | | | | | | | | | | | | | | | + | | | + | | | | | | | | | ● | | | | | | | | | | | | | | |
| | Liquid Refrigerant Flooding Back To Compressor | | | | | | | | | | | | | | | | | | | | | | | | | ● | ● | | | | | | ● | | | + | + | | ● | | ● | | ● | | | | | | | | |
| | Aux. Heat on I.D. Blower Off | | | ● | ● | | | | | | | ● | ● | | | + | | | ● | | | | | | | | | | | | | | | | | | | | | | | | | | | | ● | | | | | |
| | Excessive Operation Costs | | | + | + | | | | | | | | | | | + | | | | | | | | | ● | ● | | | | | | | + | + | | ● | ● | | + | + | + | | | | + | + | + | | | | |
| | Ice in Water Coil | | | + | + | | | | | | | | | | | | | | | | | | | | ● | | | | | | | | ● | | | | ● | | + | | ● | | | | | | | | | | | |

# GROUND SOURCE HEAT PUMP PERFORMANCE REPORT

This performance check report should be filled out by installer and retained with unit.

DATE: _____ TAKEN BY: _____

1. UNIT:
   Mfgr _____ Model # _____ S/N _____

   THERMOSTAT:
   Mfgr _____ Model # _____ P/N _____
2. Person Reporting _____
3. Company Reporting _____
4. Installed By _____ Date Installed _____
5. User's (Owner's) Name _____

   Address _____

   _____
6. Unit Location _____

WATER SYSTEM INFORMATION

7. Open Loop System (Water Well) _____ Closed Loop System _____
   A. If Open Loop where is water discharged? _____
8. The following questions are for ***Closed Loop systems only***
   A. Closed loop system designed by _____
   B. Type of antifreeze used: _____% Solution _____
   C. System type: Series _____ Parallel _____
   D. Pipe Material _____ Nominal Size _____
   E. Pipe Installed:
      1. Horizontal _____ Total length of pipe _____ ft

         No. pipes in trench _____ Depth bottom pipe _____ ft
      2. Vertical _____ Total length of bore hole _____ ft

# THE FOLLOWING INFORMATION IS NEEDED TO CHECK PERFORMANCE OF UNIT

| FLUID SIDE DATA | Cooling | ** Heating | |
|---|---|---|---|
| 9. Entering fluid temperature | _____ | _____ | F |
| 10. Leaving fluid temperature | _____ | _____ | F |
| 11. Entering fluid pressure | _____ | _____ | PSIG |
| 12. Leaving fluid pressure | _____ | _____ | PSIG |
| 13. Pressure drop through coil | _____ | _____ | PSIG |
| 14. Gallons per minute through the water coil | _____ | _____ | GPM |
| 15. Liquid or discharge line pressure | _____ | _____ | PSIG |
| 16. Suction line pressure | _____ | _____ | PSIG |
| 17. Voltage at compressor (unit running) | _____ | _____ | V |
| 18. Amperage draw at line side of contactor | _____ | _____ | A |
| 19. Amperage at compressor common terminal | _____ | _____ | A |
| 20. * Suction line temperature 6” from compressor | _____ | _____ | F |
| 21. * Superheat at compressor | _____ | _____ | F |
| 22. * Liquid line temperature at metering device | _____ | _____ | F |
| 23. * Coil subcooling | _____ | _____ | F |

| INDOOR SIDE DATA | Cooling | ** Heating | |
|---|---|---|---|
| 24. Dry bulb temperature at air entering indoor coil | _____ | _____ | F |
| 25. Wet bulb temperature of air entering indoor coil | _____ | _____ | F |
| 26. Dry bulb temperature of air leaving indoor coil | _____ | _____ | F |
| 27. Wet bulb temperature of air leaving indoor coil | _____ | _____ | F |
| 28. * Supply air static pressure (packaged unit) | _____ | _____ | WC |
| 29. * Return air static pressure (packaged unit) | _____ | _____ | WC |

30. Other information about installation

_____
_____
_____
_____
_____
_____
_____
_____

** When performing a heating test insure that second stage heat is not activated.
* Items that are optional