INSTALLATION & OPERATING INSTRUCTIONS

ECONOMIZERS WITH EXHAUST for EQUIPMENT BUILDING APPLICATIONS

Model
ECONWMT-T5A*
(Factory Installed Vent Option "T")
with D.B. OUTDOOR CONTROL
&
ECONWMT-E5A*
(Factory Installed Vent Option "W")
with ENTHALPY OUTDOOR CONTROL

For Use with 3-1/2 through 6 Ton Wall Mount Air Conditioners and Heat Pumps

NOTE: ***These instructions are written to cover field-installed economizers, but are also included with factory installed economizers. For factory installed economizers, all portions addressing "installation" are for reference only.***

BMC, Inc.
Bryan, Ohio 43506

Manual: 2100-561G
Supersedes: 2100-561F
File: Volume III Tab 19
Date: 01-18-13

CONTENTS

GENERAL

Nomenclature....3
General Information....3
Unpacking....3
Description....3

INSTALLATION

Basic Installation (Field Installed)....4 & 6
Control Wiring Connection....7
Intake Air Hood Assembly....13
Left-Hand Applications Only....13
JADE™ Economizer Controller....15
Start-Up / Checkout Procedures....17 - 19 & 21
Enthalpy Settings....20
Economizer Sequence of Operation
Condition - Cool Outdoor Ambient Conditions....22
Condition - Warm Outdoor Ambient Conditions....22
Economizer Features....23
Economizer Operation for Single Stage....24
Economizer Operation for Two Stage....25

FIGURES

Figure 1 HVAC Unit Access Panels....4
Figure 1A Condenser Exh. Plate w/Screen....5
Figure 2 Mixed Air Sensor Location....6
Figure 3 Mixed Air Sensor Location....6
Figure 4 24V Control Wiring w/1-Stage A/C....8
Figure 5 24V Control Wiring w/2-Stage A/C....9
Figure 6 24V Control Wiring w/1-Stage HP....10
Figure 7 24V Control Wiring w/2-Stage HP....11
Figure 8 2-Stage HP w/Dehum. & Opt. Elec. Heat....12
Figure 9 Economizer Hood Install Steps....14
Figure 10 Left Hand Economizer....15
Figure 11 Left Hand Control Panel Location....16
Figure Enthalpy....20
Figure 12 100% Outside Airflow Path....22
Figure 13 Mixed Airflow Path....22
Figure 14 100% Closed Loop Airflow Path....23

TABLES

Table 1 Economizer Application....3
Table 2 System Setup....17
Table 3 Advanced Setup....18
Table 4 Setpoints....18
Table 5 Checkout....19
Table 6 Status....19
Table Enthalpy....20
Table 7 Alarms....21

ECONIMIZER WITH EXHAUST MODEL NOMENCLATURE

ECON WM T – T 5 A X

- **ECON** – ECONOMIZER
- **WM** – WALL MOUNT A/C or HP
- **T** – T = Telcom/ Equipment Bldg. S = School
- **T** – T = Temperature E = Enthalpy
- **5** – CABINET SIZE 2 - 2 Ton 3 - 3 Ton 5 - 5 Ton (See Table 1)
- **A** – REVISION
- **X** – COLOR OPTIONS X - Beige 1 - White 4 - Buckeye Gray 5 - Desert Brown 8 - Dark Bronze

GENERAL INFORMATION

The economizer should only be installed by a trained heating and air conditioning technician. These instructions serve as a guide to the technician installing an economizer package, not as a step-by-step procedure with which the mechanically inclined owner can install the package.

The economizer housing is shipped in one carton, which contains the electrical harness, miscellaneous hardware and installation instructions.

The economizer installation requires the use of a 2-stage cooling thermostat (if there is not one already present) and requisite amounts of low voltage conductor wire for two-stage cooling. The number of low-voltage control conductors will vary depending upon application.

If using a master controller, the MC4000 controller is designed specifically to control two (2) redundant wall mount units equipped with economizers.

Any wall mount unit equipped with an economizer must also have a factory/field installed low ambient control. Please refer to appropriate model/year Specification Sheet for requisite field installed low ambient control kit part numbers.

UNPACKING

Upon receipt of the equipment, be sure to compare the model number found on the shipping label with the accessory identification information on the orders and shipping document to verify that the correct accessory has been shipped.

Inspect the carton housing of each economizer assembly as it is received, and before signing the freight bill – verify that all items have been received and there is no visible damage. Note any shortages or damage on all copies of the freight bill. The receiving party must contact the last carrier immediately, preferably in writing, requesting inspection by the carrier's agent. Concealed damage not discovered until after loading must be reported to the carrier within 15 days of its receipt.

NOTE: Factory installed Telcom economizers have the air intake hood shipped knocked-down. See "Intake Air Hood Assembly" section for shipping location of hood parts and follow the assembly instructions.

DESCRIPTION

The ECONWMT-T5AX, -E5AX economizer is designed to be used with wall mount series air conditioners and heat pumps, shown in Table 1, equipped with low ambient controls. They are electromechanical economizer systems designed to provide "free" cooling where the outdoor air temperature/enthalpy is cool enough to provide the needed cooling without running the compressor, or in addition to the compressor. When cooling is required, the system automatically takes advantage of cold outdoor air when available and uses it for first stage cooling. This then reduces the need to run the air conditioning compressor providing lower operating costs and increasing the service life of the equipment. If the outdoor air temperature/enthalpy is too warm to be sufficient for cooling, the dry bulb outdoor air temperature sensor detects the condition and automatically closes the outdoor air intake/exhaust damper, opens the return air damper, and switches to compressor-only operation. Without attention from the end user, the economizer assembly is meant to automatically achieve maximum savings while ensuring appropriately cool space temperatures. The economizer utilizes a fully-modulating damper actuator, which will control intake/exhaust in order to obtain and maintain a factory-set minimum supply air temperature. As a secondary feature, the economizer assembly can be programmed for a minimum ventilation based on an "occupied" (or otherwise dedicated) 24V signal to satisfy fresh air ventilation on populated structures or dilution of internal pollutants.

TABLE 1

① MODEL	FOR USE WITH FOLLOWING UNITS			
ECONWMT-T5AX -E5AX	W38A	WA3S	S38H	T36H
	J/W42A	WA4S	S43H	T42H
	J/W48A	WA5S	S49H	T48H
	W49A	J/W42H	S61H	T60H
	J/W60A	J/W48H	J/W42L	T36S
	W61A	J/W60H	J/W48L	T42S
	J/W72A		J/W60L	T48S
			J/W70L	T60S

① Low ambient control is required w/economizer for low temperature operation.

ECONWMT Series Economizers are not for use with variable capacity ECU models.

INSTALLATION of FIELD (INSTALLED) ECONOMIZER

BASIC INSTALLATION

1. Unpack the economizer assembly, which includes the integral economizer with attached electrical harness, mixed air sensor, body panels, miscellaneous hardware, and installation instructions.
2. From existing wall mount unit, remove and save Blower Access Panel and Filter Access Panel. Remove and discard the Ventilation Access Panel. Remove and save the existing filter. (See Figure 1.)

⚠ WARNING	AVERTISSEMENT
. HAZARD OF ELECTRICAL SHOCK . ELECTRICAL SHOCK CAN RESULT IN SERIOUS INJURY OR DEATH . DISCONNECT THE REMOTE ELECTRIC POWER SUPPLY OR SUPPLIES BEFORE SERVICING	. DANGER DE CHOC ELECTRIQUE . UN CHOC ELECTRIQUE PEUT TUER OU CAUSER DES BLESSURES GRAVES . COUPER LES ALIMENTATIONS ELECTRIQUES AVANT D'EFFECTUER LA MAINTENANCE

7961-380

3. Remove and discard the exhaust cover plate. (See Figure 1.)
4. Install new condenser exhaust plate with screen over the opening. (See Figure 1A.)

NOTE: If you are installing this economizer assembly into a left-hand access wall mount, please stop here and proceed to specific instruction note on Page 13.

5. In the open cavity between the filter rack and the condenser section, begin to insert the main economizer assembly. Slide the assembly inside, being careful not to tear the existing insulation. Do not completely recess the assembly. (See Figure 2.)
6. Unravel the attached economizer wiring harness and separate the two (2) orange wires connected to a white, two-pin sensor plug. The remainder of the low voltage wires can be routed through the existing wiring grommet located near the bottom of the wall mount electrical control panel. (See Figure 2.)

FIGURE 1

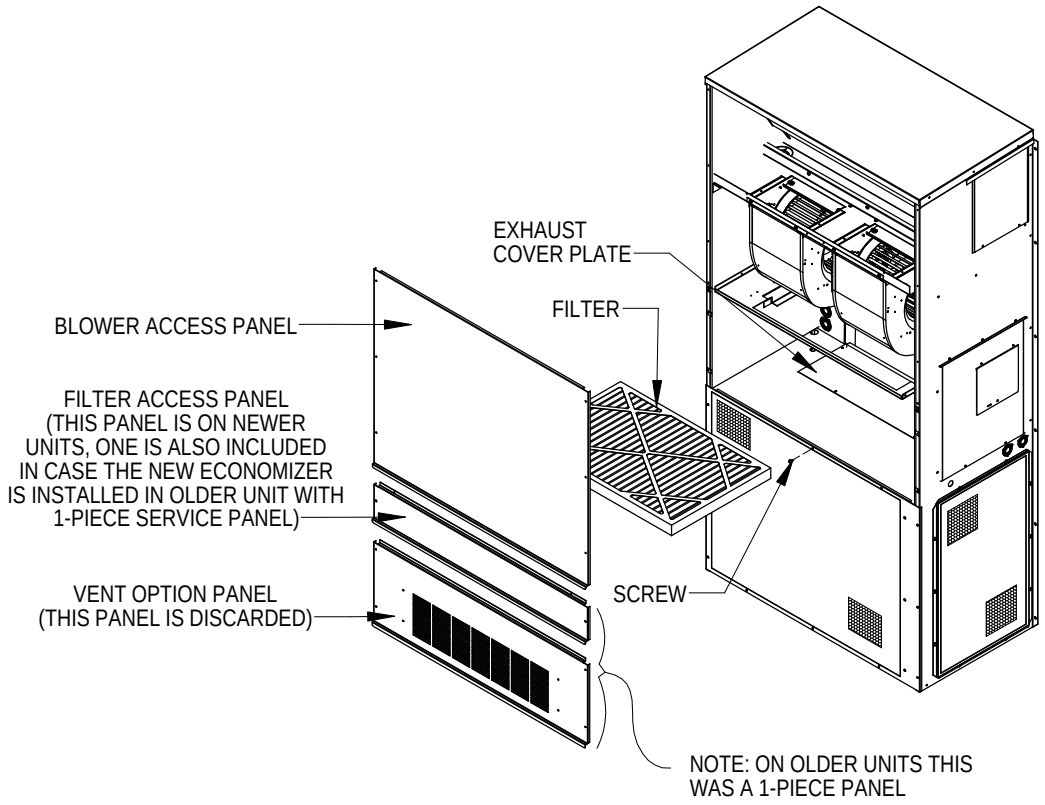

MIS-2964

FIGURE 1A
CONDENSER EXHAUST PLATE WITH SCREEN

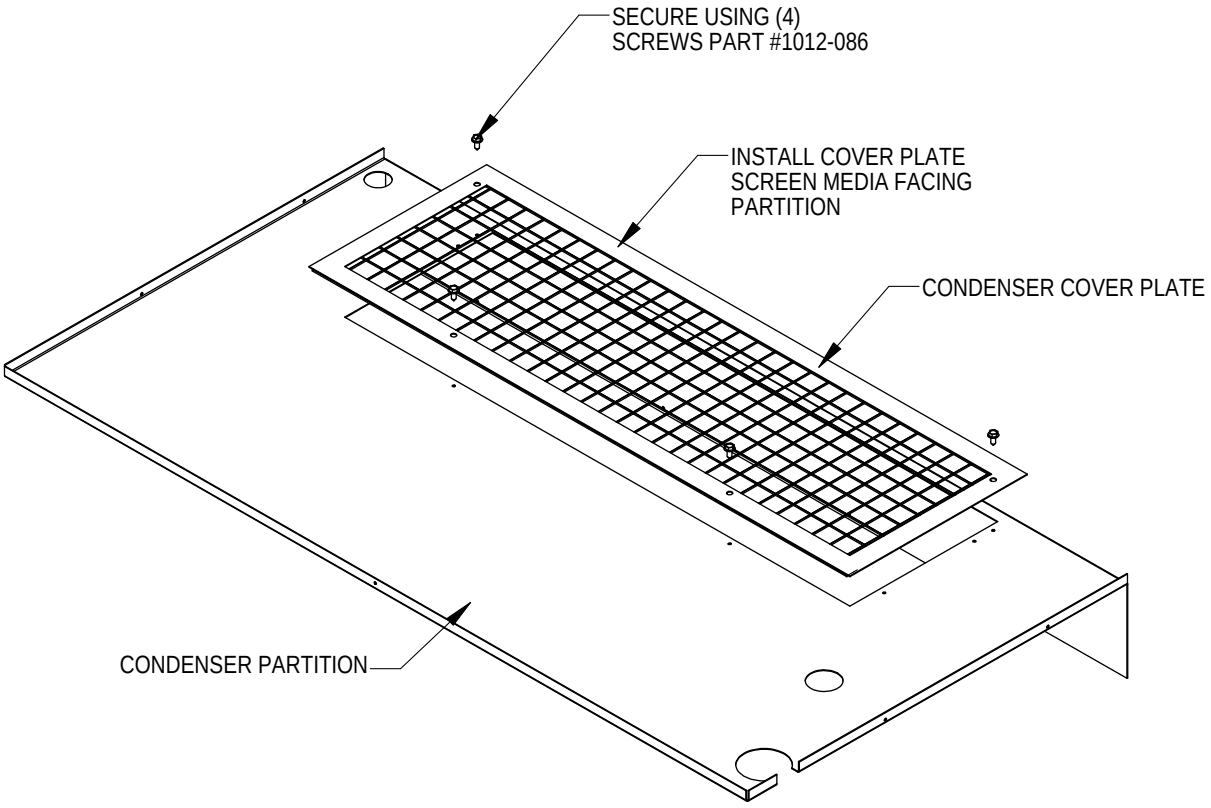

MIS-2955

7. Pull wires gently through grommet so that low voltage wires protrude underneath wall mount terminal board.

8. Route two (2) orange wires connected to a white two-pin sensor plug along refrigerant lines and behind the filter bracket to terminate at the blower partition. (See Figure 2.)

9. Fully seat economizer assembly to the rear of the wall mount cavity, making sure economizer control panel opposite filler strip is fully recessed into cabinet. (See Figure 2.)

10. Install temperature sensor bracket and mixed air temperature sensor in blower partition. Insert white two-pin sensor into sensor housing. (See Figure 3.)

11. Reinstall Blower Access Panel and Filter Access Panel.

12. Connect all low voltage leads to terminal board of wall mount unit as required according to installed equipment and controls. Figure 4 shows the basic economizer wiring, and is followed by typical control wiring diagrams for single unit applications. Refer to MC4000 Lead/Lag Controller Instructions Manual 2100-563 for dual unit control connections.

FIGURE 2

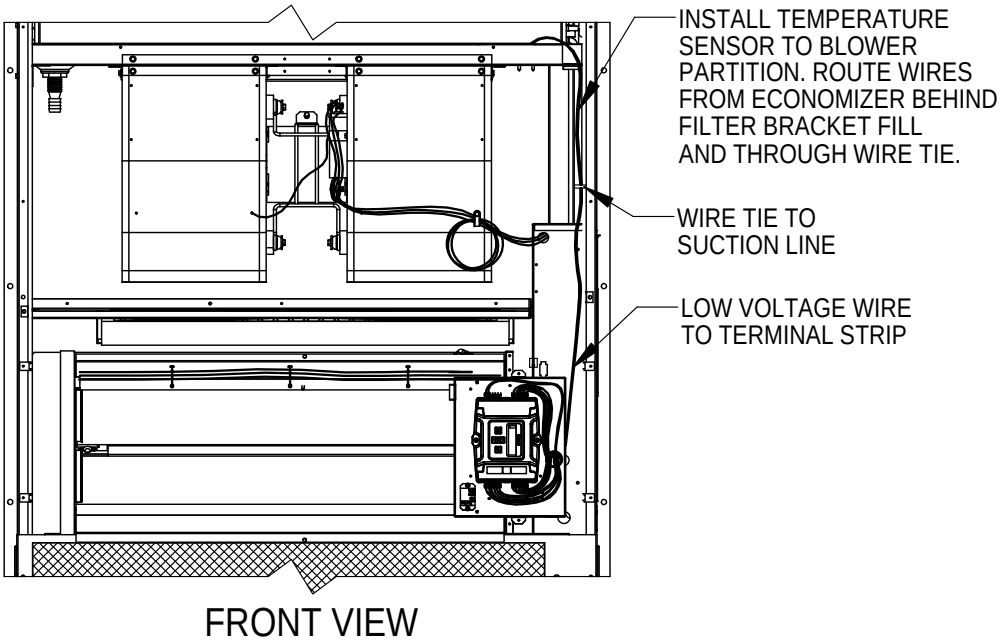

FIGURE 3

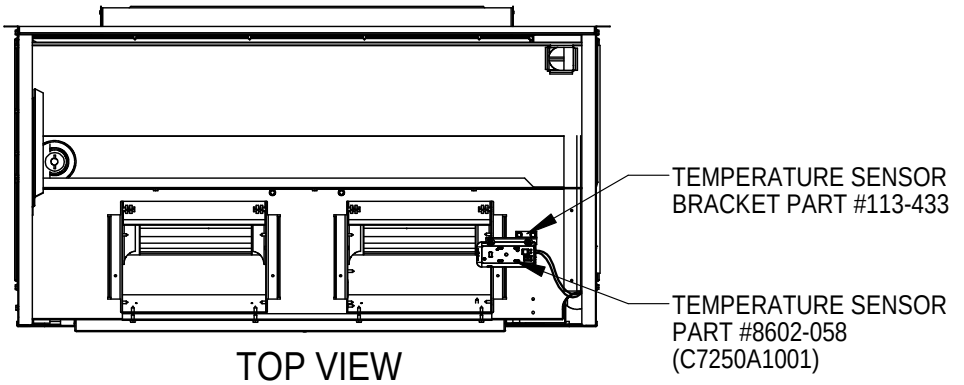

MIS-2933 A

NOTE: *Since observation of motor/damper operation is difficult after air hood installation, it is recommended the unit be enabled for start-up now. If high voltage power is available and the wall mount unit can be energized, turn to* **Page 14** *for programming and start-up/checkout procedures. If no power is available, or if immediate start-up is not desired, continue with the basic installation process. The air hood assembly can be partially disassembled at a later time for start-up/checkout procedures.*

CONTROL WIRING CONNECTION DIAGRAMS

The control wiring diagrams on the following pages represent typical control wiring for W model and S model single unit installations with individual thermostats. If thermostats other than referenced are used, the installer must verify output functions and proper operation accordingly. Factory installed T and W vent options are wired per the appropriate wiring diagram in this manual.

For W model dual installations utilizing the MC4000 Lead/Lag Controller system, complete details are contained in the MC 4000 Series Lead/Lag Controller manual 2100-563.

On H model units, factory installed T and W vent options are wired at the factory per Figure 7 of the MV4000 Series Lead/Lag Controller manual 2100-571.

For H model dual installations utilizing the MV4000 lead/lag controller system, complete details are contained in the MV 4000 Series Lead/Lag Controller manual 2100-571.

These economizers **CAN NOT** be used with the MD4000 Series Lead/Lag Controllers.

FIGURE 4
1-STAGE A/C WITH OPTIONAL ELECTRIC HEAT
WITH ECONWM∗ STYLE ECONOMIZER

Low Voltage Wiring Diagram

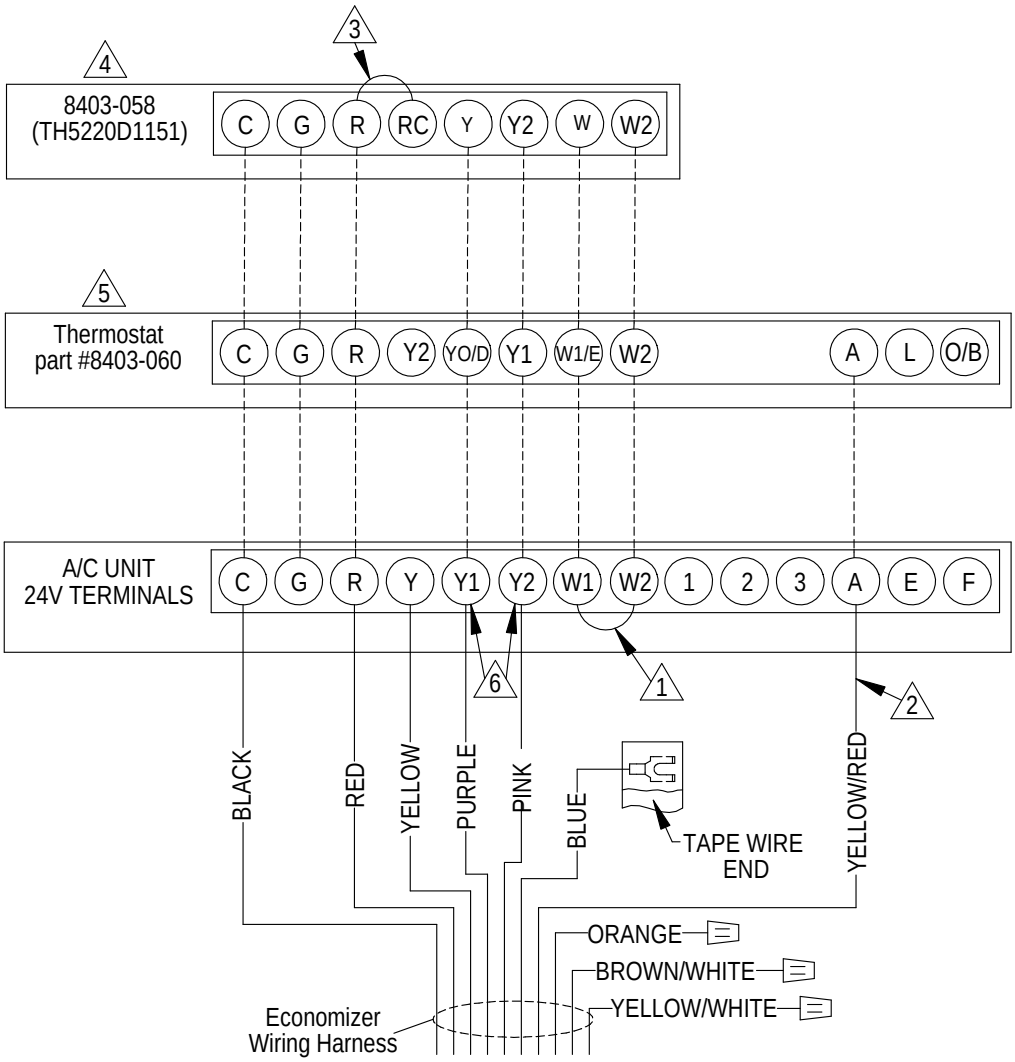

1. *Factory installed jumper. Remove for 2-stage operation on units with 15 or more kw.*
2. *Must be energized to enable minimum position. NOTE: Economizer Control Default Setting is 10V (100%). Depending upon application may require setting to lower value.*
3. *Factory Jumper Installed.*
4. *Change "system type", set up function 1, from 5 (2 heat/ 1 cool heat pump) to 6 (2 heat/ 2 cool conventional).*
5. *Change model configuration from heat pump to heat/cool, and must be configured for economizer for YO/D output to be active as first stage cooling.*
6. *Older units may not have Y1 and Y2 connections on 24v terminal block. If not present wire nuts must be used.*

MIS-2983 B

FIGURE 5
2-STAGE A/C WITH OPTIONAL ELECTRIC HEAT
WITH ECONWM∗ STYLE ECONOMIZER

Low Voltage Wiring Diagram

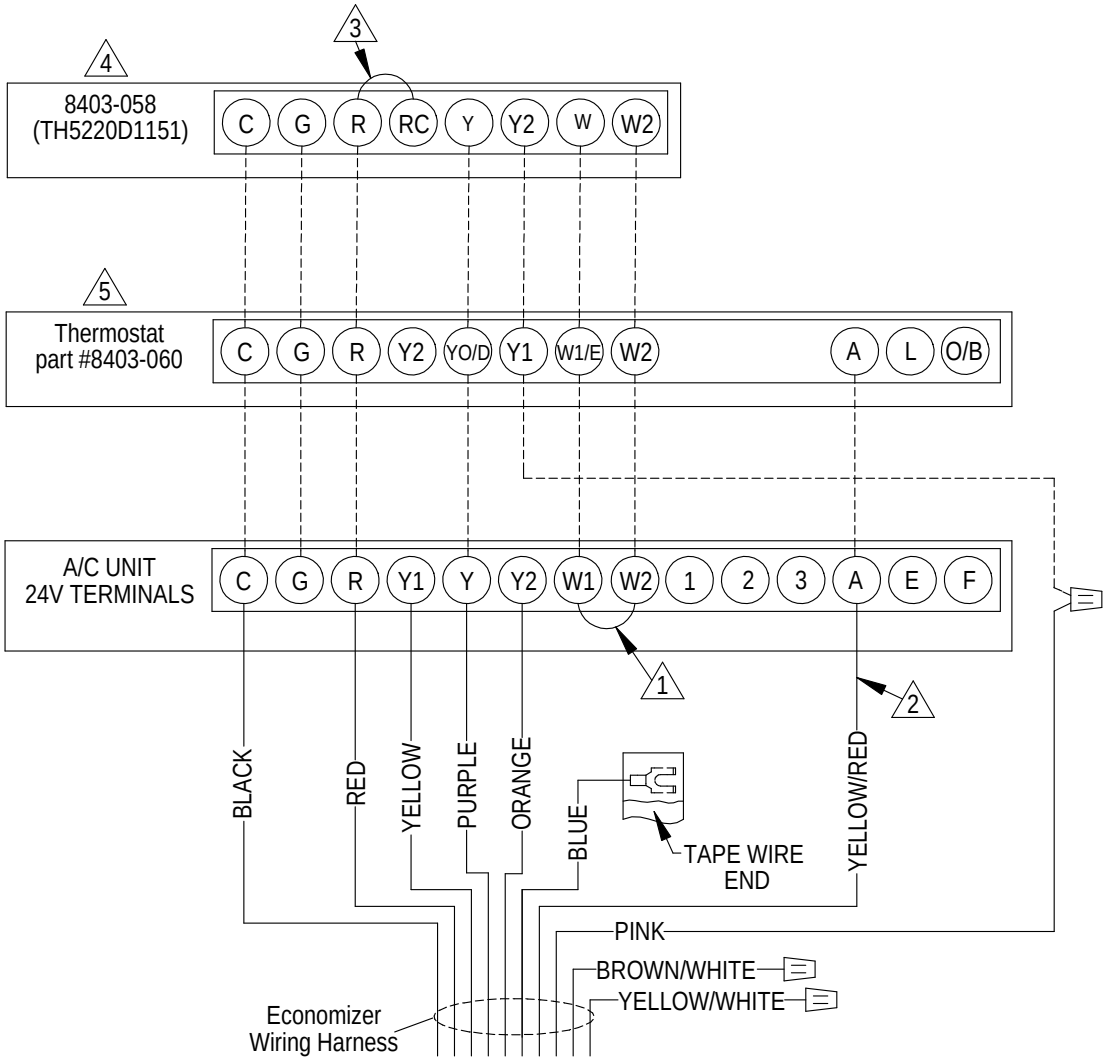

1. *Factory installed jumper. Remove for 2-stage operation on units with 15 or more kw.*
2. *Must be energized to enable minimum position. NOTE: Economizer Control Default Setting is 10V (100%). Depending upon application may require setting to lower value.*
3. *Factory Jumper Installed.*
4. *Change "system type", set up function 1, from 5 (2 heat/ 1 cool heat pump) to 6 (2 heat/ 2 cool conventional).*
5. *Change model configuration from heat pump to heat/cool, and must be configured for economizer for YO/D output to be active as first stage cooling.*

MIS-2984 B

FIGURE 6
1-STAGE HEAT PUMP WITH OPTIONAL ELECTRIC HEAT
WITH ECONWM∗ STYLE ECONOMIZER

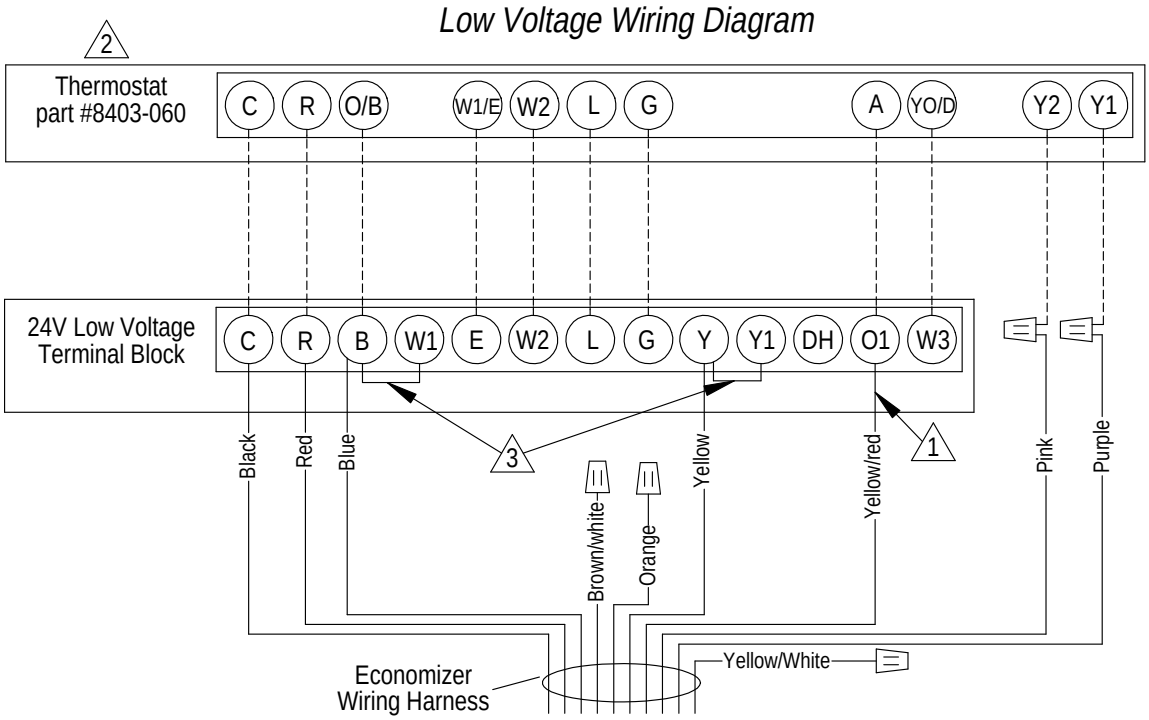

1 *Must be energized to enable minimum position. NOTE: Economizer Control Default Setting is 10V (100%). Depending upon application may require setting to lower value.*

2 *Must be configured for heat pump / multistage/ no economizer/ to enable YO/D output to be active as dehumidification output*

3 *Factory Jumper Installed.*

MIS-2981 B

FIGURE 7
2-STAGE HEAT PUMP WITH OPTIONAL ELECTRIC HEAT
WITH ECONWM∗ STYLE ECONOMIZER

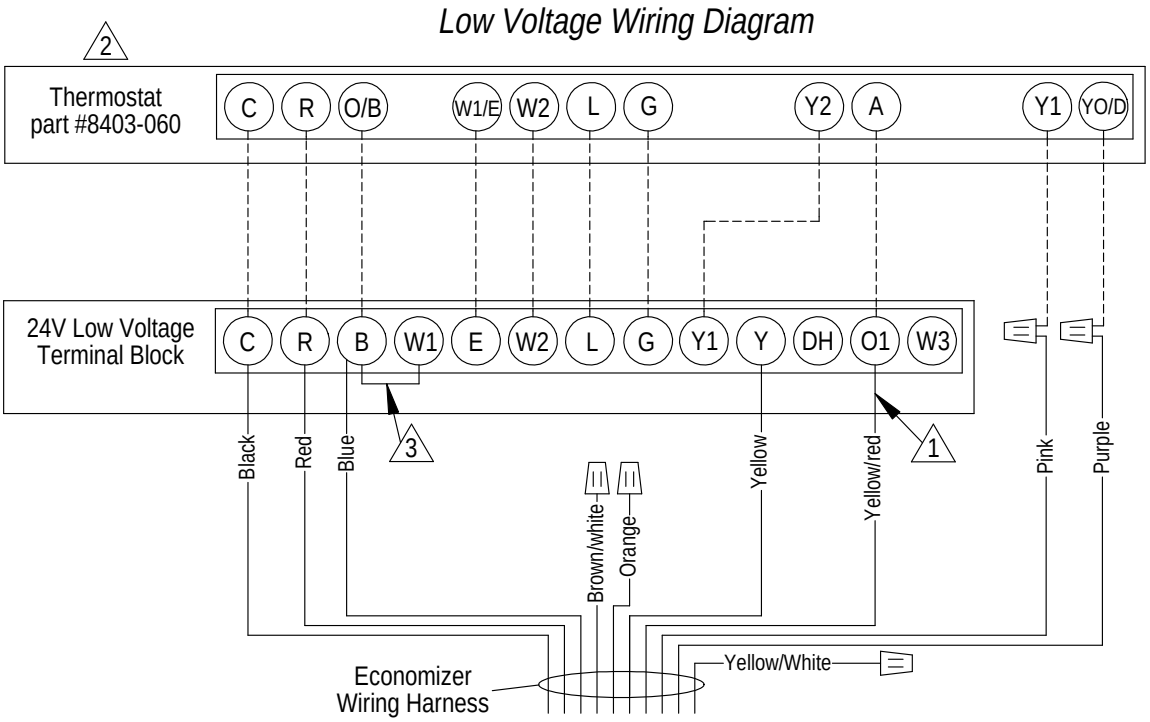

1 *Must be energized to enable minimum position. NOTE: Economizer Control Default Setting is 10V (100%). Depending upon application may require setting to lower value.*

2 *Must be configured for heat pump and economizer to enable YO/D output to be active as 1st-stage cooling*

3 *Factory Jumper Installed.*

MIS-2982 B

FIGURE 8
2-STAGE HEAT PUMP WITH DEHUMIDIFICATION & OPTIONAL ELECTRIC HEAT
WITH ECONWM∗ STYLE ECONOMIZER

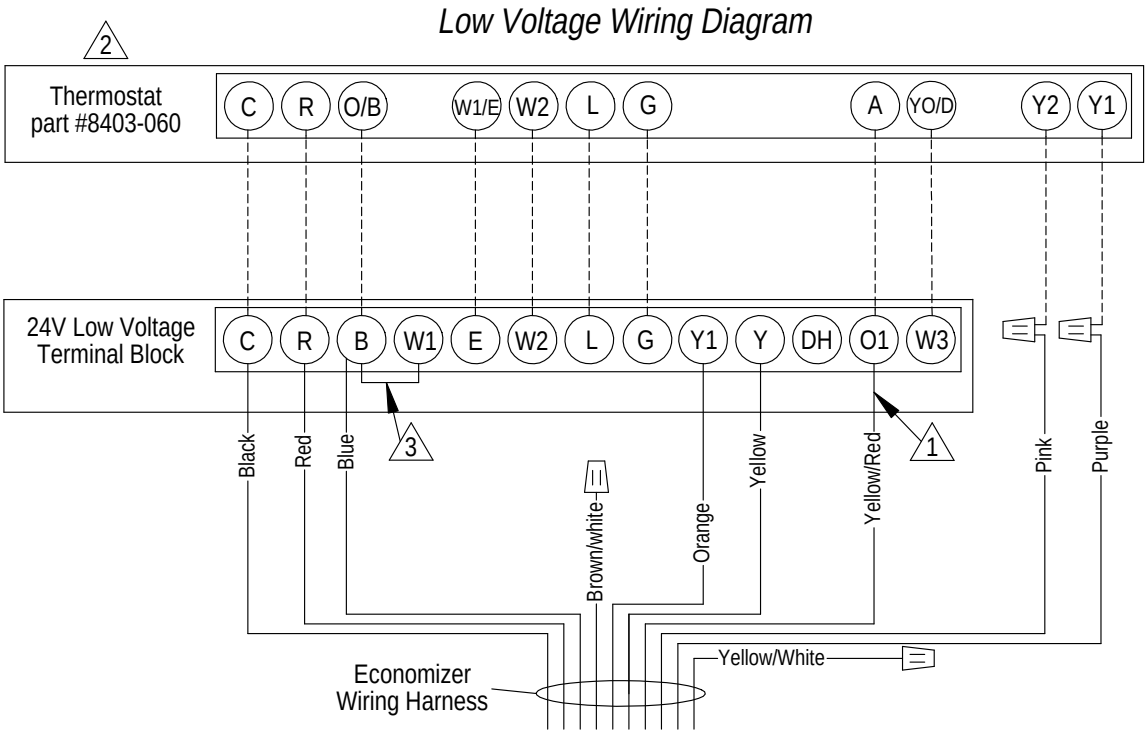

1 *Must be energized to enable minimum position. NOTE: Economizer Control Default Setting is 10V (100%). Depending upon application may require setting to lower value.*

2 *Must be configured for heat pump / no economizer/ to enable YO/D output to be active as dehumidification output*

3 *Factory Jumper Installed.*

MIS-2995 B

INTAKE AIR HOOD ASSEMBLY

The Telcom/Equipment Building version economizers utilize an air intake hood to maximize outdoor airflow performance and to be able to introduce this at low intake velocity.

FACTORY INSTALLED ECONOMIZERS

The main economizer assembly is installed in the unit's ventilation cavity, but the air intake hood is shipped knocked down. The intake hood pieces are located on the back side of the A/C unit.

NOTE: Some applications on equipment buildings necessitate the air intake hood assembly be shipped inside the building for installation at the final site. In this case, the solid panel covering the economizer section must be left in place to protect and weatherize the equipment during transit.

ECONOMIZER HOOD INSTALLATION

A.) ***For Factory Installed Economizer Only:*** Detach plate by removing three (3) screws and filter door. Discard cover plate and replace filter door (See Step #1.)

B.) ***For Field Installed Economizer Only:***

1. Attach hood mounting door by inserting top lip under hook bend on upper panel. Use four (4) ½" hex head screws to fasten hood mounting door to unit. (See Step #1.)
2. Use four (4) screws to attach right side assembly and left side assembly. (See Step #2.)
3. Hood bottom requires pre-assembly of lower filter angle, bottom filter bracket, and bottom divider bracket. Attach lower filter angle to bottom filter bracket as shown in Step #3 using two (2) ½" hex head screws. Bottom filter bracket is then attached to primered non-textured side of base using two (2) ½" hex head screws. Bottom divider bracket is installed to painted textured side of base using three (3) ½" hex head screws. Paint side of bottom divider bracket is facing "down" lip on front of hood base. (See Step #3.)
4. Install hood top assembly to hood mounting door using three (3) ½" hex head screws. Side bends of top assembly should overlap left and right side assemblies. Attach top to side assemblies using four (4) ½" hex head screws. (See Step #4.)
5. Insert hood bottom assembly between side assemblies with back bend resting on hook bend of hood mounting door. Attach to left side assembly and right side assembly using four (4) ½" hex head screws. (See Step #4.)

LEFT-HAND APPLICATIONS ONLY

1. Before installation into wall mount cavity, rotate economizer 180° so JADE controller will now be adjacent to the wall mount unit control panel. (See Figure 10.)
2. Remove two (2) side angles and block off plate. (See Figure 10.)
3. Remove switch assembly by taking out two (2) screws. Reposition switch assembly and reattach using two (2) screws. (See Figures 10 & 11.)
4. Reinstall two (2) side angles in upper position. Reinstall block off plate in lower position. (See Figure 10.)
5. Loosen actuator shaft adaptor clamp from damper blade rod. (See Figure 10.)
6. Remove actuator assembly from economizer. (See Figure 10.)
7. Pull adaptor clamp retainer clip; remove adaptor clamp from actuator assembly and reinstall on the opposite side of the actuator on the "0" position. (See Figure 10.)
8. Reinstall actuator assembly with adaptor clamp facing away from the economizer assembly. (See Figure 10.)
9. Ensure position of the economizer damper is closed, then tighten shaft adaptor clamp. (See Figure 10.)
10. Hood mounting door will use alternate control panel door location. (See Figure 11.) Before installing hood, ensure switch is functioning properly in upper position (activated in closed blade position.)

NOTE: Please resume the basic installation process at Step #4 on Page 4.

FIGURE 9

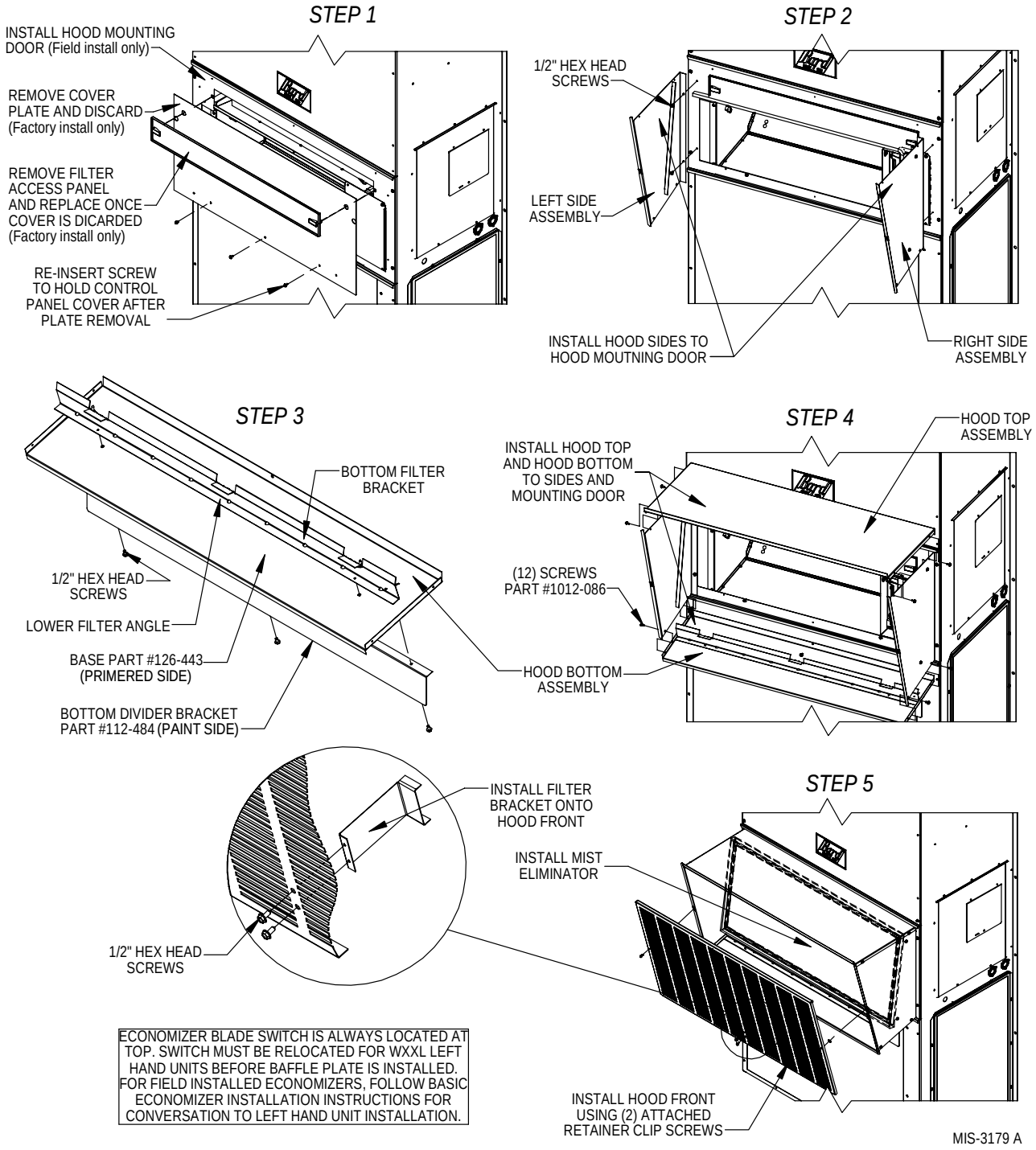
STEP 1
INSTALL HOOD MOUNTING DOOR (Field install only)
REMOVE COVER PLATE AND DISCARD (Factory install only)
REMOVE FILTER ACCESS PANEL AND REPLACE ONCE COVER IS DICARDED (Factory install only)
RE-INSERT SCREW TO HOLD CONTROL PANEL COVER AFTER PLATE REMOVAL
STEP 2
1/2" HEX HEAD SCREWS
LEFT SIDE ASSEMBLY
INSTALL HOOD SIDES TO HOOD MOUTNING DOOR
RIGHT SIDE ASSEMBLY
STEP 3
BOTTOM FILTER BRACKET
1/2" HEX HEAD SCREWS
LOWER FILTER ANGLE
BASE PART #126-443 (PRIMERED SIDE)
BOTTOM DIVIDER BRACKET PART #112-484 (PAINT SIDE)
STEP 4
HOOD TOP ASSEMBLY
INSTALL HOOD TOP AND HOOD BOTTOM TO SIDES AND MOUNTING DOOR
(12) SCREWS PART #1012-086
HOOD BOTTOM ASSEMBLY
INSTALL FILTER BRACKET ONTO HOOD FRONT
1/2" HEX HEAD SCREWS
STEP 5
INSTALL MIST ELIMINATOR
INSTALL HOOD FRONT USING (2) ATTACHED RETAINER CLIP SCREWS
ECONOMIZER BLADE SWITCH IS ALWAYS LOCATED AT TOP. SWITCH MUST BE RELOCATED FOR WXXL LEFT HAND UNITS BEFORE BAFFLE PLATE IS INSTALLED. FOR FIELD INSTALLED ECONOMIZERS, FOLLOW BASIC ECONOMIZER INSTALLATION INSTRUCTIONS FOR CONVERSATION TO LEFT HAND UNIT INSTALLATION.
MIS-3179 A

FIGURE 10

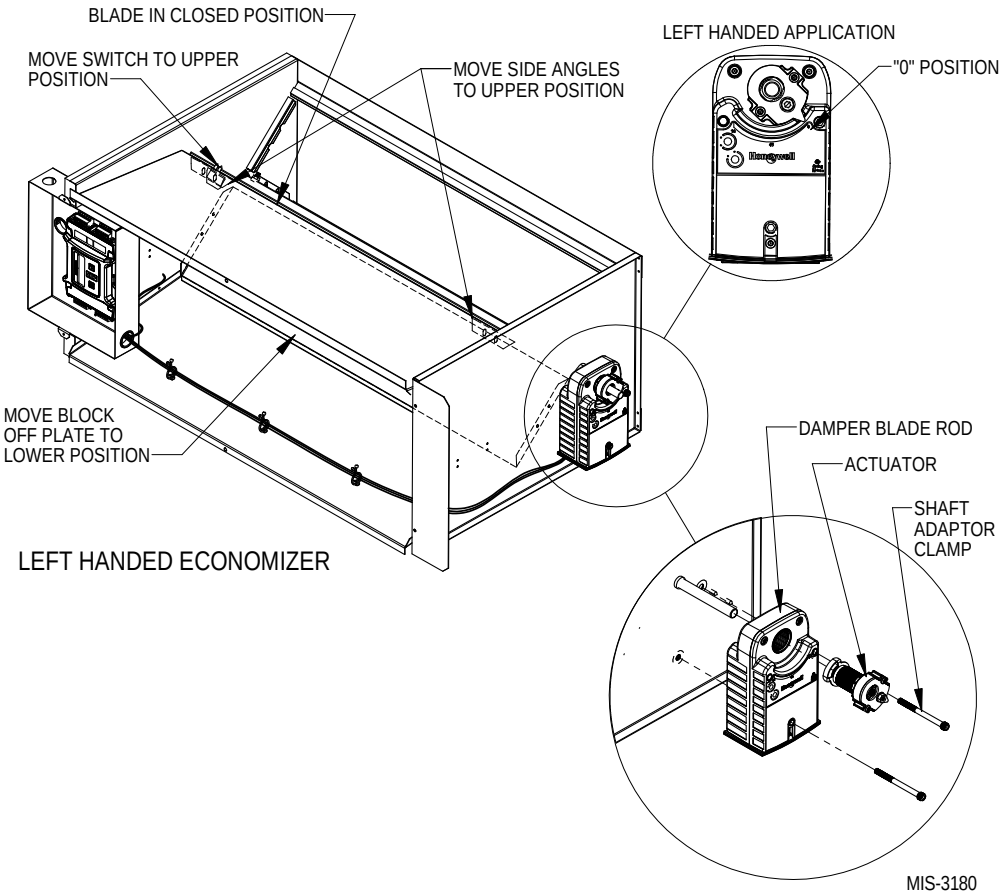

JADE™ ECONOMIZER CONTROLLER

W7220 Controller offers unparalleled flexibility and expansion in a dependable and solid electronic platform.

- Multiple economizer applications from one controller.
- Nearly limitless customization of setpoints.
- Internal Checkout menu provides fast performance assessment.
- Alarms menu provides assistance in troubleshooting.

Memory: User defined setpoints remain in non-volatile flash memory regardless of electrical outage duration. Control voltage below 18V may cause erratic performance.

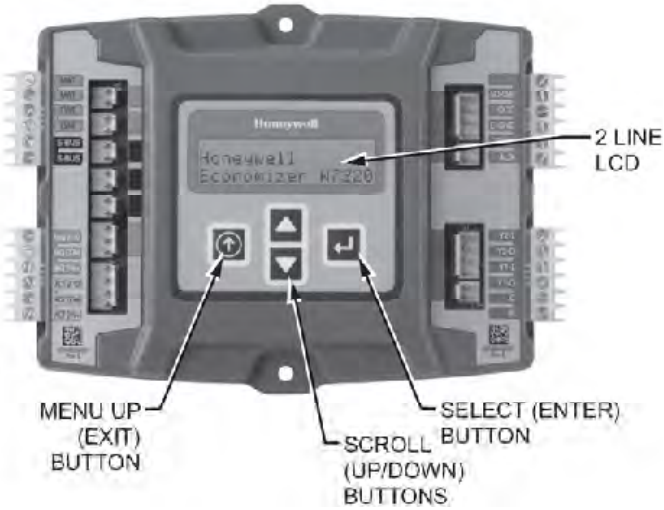

FIGURE 11

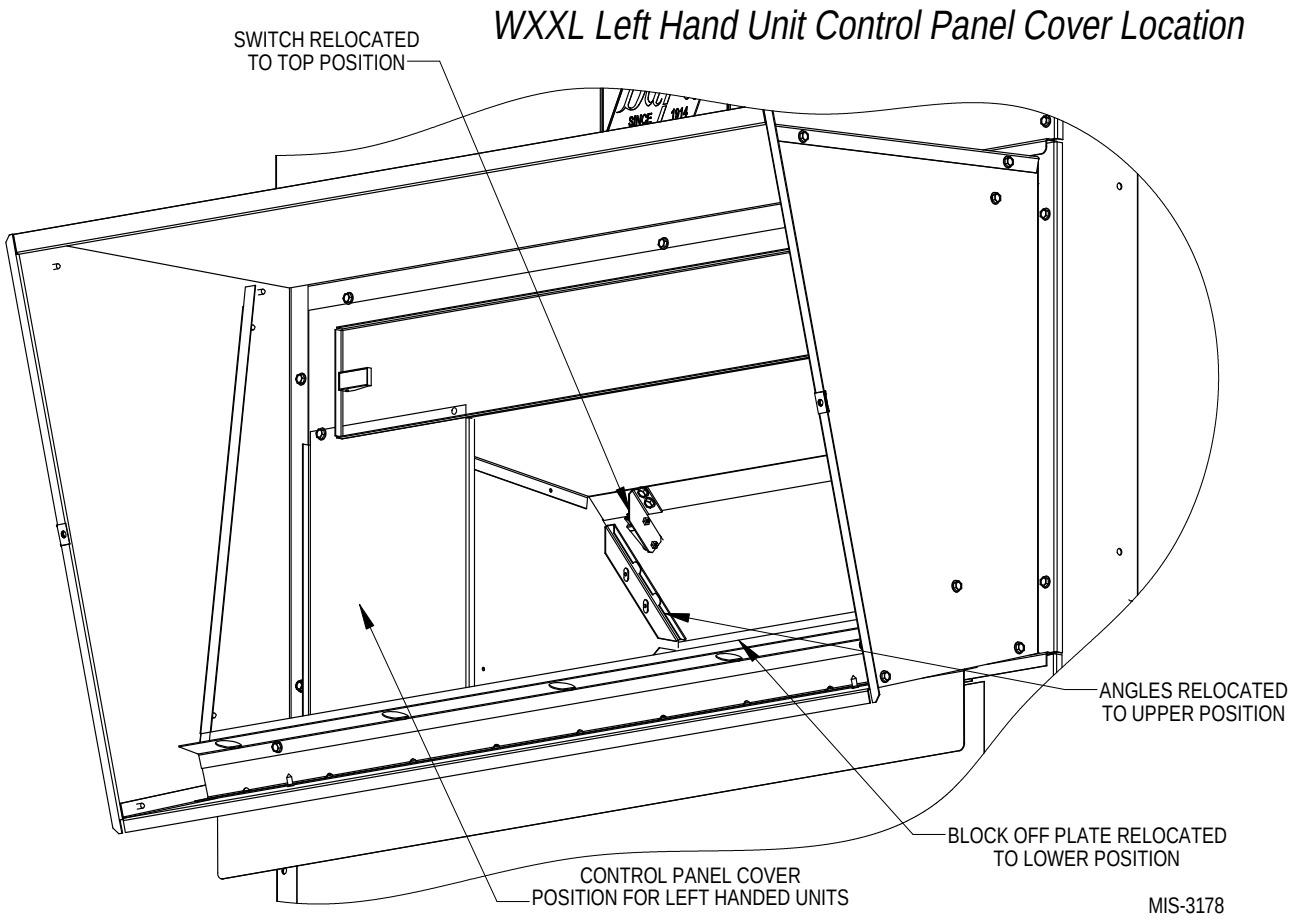
WXXL Left Hand Unit Control Panel Cover Location
SWITCH RELOCATED
TO TOP POSITION
ANGLES RELOCATED
TO UPPER POSITION
BLOCK OFF PLATE RELOCATED
TO LOWER POSITION
CONTROL PANEL COVER
POSITION FOR LEFT HANDED UNITS
MIS-3178

START-UP / CHECKOUT PROCEDURES

From the factory, the **JADE™** economizer controller has been preset with "default" values that were pre-determined as optimum for equipment buildings, and these are shown in Tables 2 - 4. However, it is important to review and/or customize these operational values per owner specifications in order to guarantee satisfactory performance. The installing contractor can easily access the JADE™ programming by the integral keypad and LCD display.

There are six (6) basic MENU categories to navigate:

1. **STATUS** – provides real-time access to sensor input, damper and equipment operation.
2. **SETPOINTS** – customizable operational parameters.
3. **SYSTEM SETUP** – customizable application programming.
4. **ADVANCED SETUP** – further application and operational options.
5. **CHECKOUT** – instantly activate and verify economizer functions.
6. **ALARMS** – displays alarms and pinpoints problem areas.

Before being placed in service, the **JADE™** economizer controller programming should be reviewed/customized through the following steps:

1. **SYSTEM SETUP:** from the main screen, press the ***SCROLL (UP/DOWN) BUTTONS*** to navigate through the six (6) basic menu items to the **SYSTEM SETUP** menu.

– Push the **SELECT (ENTER) BUTTON** to choose the **SYSTEM SETUP** menu.

– Navigate through the multiple levels of **SYSTEM SETUP** by pushing the ***SCROLL (UP/DOWN) BUTTONS***.

– To change a specific parameter in the **SYSTEM SETUP** menu, press the ***SELECT (ENTER) BUTTON*** to display its current value. Press the ***SCROLL (UP/DOWN) BUTTONS*** to change or or increase/decrease value. Press the ***ELECT (ENTER) BUTTON*** to save the new customized value — **"CHANGE STORED"** will be displayed. Press the ***SELECT (ENTER) BUTTON*** again to return to current menu parameter.

– For specific **SYSTEM SETUP** level information, refer to **Table 2**.

NOTE: During an extended level of inactivity, the display of the JADE™ economizer controller will begin to automatically scroll through the various levels of the STATUS menu as a screensaver. Each level will stay for approximately 5 seconds before changing to the next level.

TABLE 2
SYSTEM SETUP (Menu Levels)

MENU LEVEL	DEFAULT VALUE	RANGE	NOTES
INSTALL	01/01/10		Display Order = MM/DD/YY Setting Order = DD/MM/YY
UNITS DEG	°F	°F / °C	Sets controller to read in either measurements
EQUIPMENT	CONV	CONV HP(O) HP(B)	CONV = A/C HP(O) = Energize on Cool HP(B) = Energize on Heat
FAN CFM	5000	100 to 15,000	Not applicable
AUX OUT	EXH2	NONE ERV EXH2 SYS	Product can be used to signal other devices
OCC	INPUT	INPUT or ALWAYS	INPUT is for dedicated OCC signal, ALWAYS is for all other situations
FACTORY DEFAULT	NO	YES or NO	Resets to factory defaults if changed to YES

2. **ADVANCED SETUP:** from the main screen, press the ***SCROLL (UP/DOWN) BUTTONS*** to navigate through the six (6) basic menu items to the **ADVANCED SETUP** menu.

– Push the **SELECT (ENTER) BUTTON** to choose the **ADVANCED SETUP** menu.

– Navigate through the multiple levels of **ADVANCED SETUP** by pushing the ***SCROLL (UP/DOWN) BUTTONS***.

– To change a specific parameter in the **ADVANCED SETUP** menu, press the ***SELECT (ENTER) BUTTON*** to display its current value. Press the ***SCROLL (UP/DOWN) BUTTONS*** to change or increase/decrease value. Press the ***SELECT (ENTER) BUTTON*** to save the new customized value — **"CHANGE STORED"** will be displayed. Press the ***SELECT (ENTER) BUTTON*** again to return to current menu parameter.

– For specific **ADVANCED SETUP** level information, refer to **Table 3**.

TABLE 3
ADVANCED SETUP (Menu Levels)

MENU LEVEL	DEFAULT VALUE	RANGE	NOTES
MA LOW SET	45°F	35-55°	Temp to activate freeze protection — Close Damper
FREEZE POS	CLO	CLO or MIN	Damper position upon freeze protection
STG3 DLY	2.0h	0 to 4.0h or OFF	Delay for 3rd Stage Cooling – allows for 3 stages of cooling, one stage for econ & two stages for compressor
DMPR POS	CLO	CLO or OPN	Where damper goes upon shutdown signal
MA T CAL	0.0°F	+/-2.5°F from actual reading	Mixed Air Sensor temperature calibration
OA T CAL	0.0°F	+/-2.5°F from actual reading	Outdoor Air Sensor temperature calibration
OAS H CAL	0%	+/-10% from actual reading	Outdoor Air Humidity Sensor calibration for economizers using temp/humidity sensor

TABLE 4
SETPOINTS (Menu Levels)

MENU LEVEL	DEFAULT VALUE	RANGE	NOTES
MA T SET	53°F	38°F to 65°F	Mixed Air Temperature setpoint at which the economizer damper will begin to modulate to maintain setting
LOW T LOCK	0°F	-45°F to 80°F	Low outdoor ambient temperature for compressor lockout
DRYBLB SET	70°F	48°F to 80°F	Maximum outdoor temperature setting for "free" economizer cooling
ENTH CURVE	ES3	ES1, ES2, ES3, ES4 or ES5	Enthalpy boundary "curves" for economizers using temp/humidity sensor, see "Enthalpy Settings" explanation
MIN POS	2.8V	2 to 10 VDC	Actuator voltage for Minimum Position – see Minimum Position Vent Setup Note below
EXH1	50%	0 to 100%	Setpoint for damper if exhaust fan is powered by economizer
EXH2	75%	0 to 100%	Setpoint for AUX output signal

3. **SETPOINTS:** from the main screen, press the ***SCROLL (UP/DOWN) BUTTONS*** to navigate through the six (6) basic menu items to the **SETPOINTS** menu.

- Push the **SELECT (ENTER) BUTTON** to choose the **SETPOINTS** menu.
- Navigate through the multiple levels of **SETPOINTS** by pushing the ***SCROLL (UP/DOWN) BUTTONS***.
- To change a specific parameter in the **SETPOINTS** menu, press the ***SELECT (ENTER) BUTTON*** to display its current value. Press the ***SCROLL (UP/DOWN) BUTTONS*** to change or increase/decrease value. Press the ***SELECT (ENTER) BUTTON*** to save the new customized value — **"CHANGE STORED"** will be displayed. Press the ***SELECT (ENTER) BUTTON*** again to return to current menu parameter.
- For specific **SETPOINTS** level information, refer to **Table 4**.

NOTE: At this point, the economizer assembly should be fully functional and ready for preliminary testing.

4. **CHECKOUT:** from the main screen, press the ***SCROLL (UP/DOWN) BUTTONS*** to navigate through the six (6) basic menu items to the **CHECKOUT** menu.

- Push the **SELECT (ENTER) BUTTON** to choose the **CHECKOUT** menu.
- Navigate through the multiple levels of **CHECKOUT** by pushing the ***SCROLL (UP/DOWN) BUTTONS***.
- To perform a specific test in the **CHECKOUT** menu, press the ***SELECT (ENTER) BUTTON*** to choose a particular exercise, **"RUN?"** will appear. Press the ***SELECT (ENTER) BUTTON*** again to activate this exercise. After a short pause, **"IN PROGRESS"** will appear as the test activates. **"DONE"** will display after the test is complete. Press the ***MENU UP (EXIT) BUTTON*** to end the test and/or turn off the activated relay.
- For specific **CHECKOUT** level information, refer to **Table 5**.

NOTE: CHECKOUT functions bypass the normal 5-minute delay for compressor protection. Be sure to allow for enough time to pass between tests so the compressor is not damaged from extreme short-cycling.

MINIMUM POSITION NOTE: Minimum position setting has been preset to 10V which when connected to MC4000 Lead/Lag Controller System will allow economizer to drive wide open per emergency ventilation strategy as detailed in MC4000 Instructions. This may require resetting to a lower value per job specifications.

TABLE 5
CHECKOUT (Menu Levels)

CHECKOUT ITEM	CHECKOUT TEST
DAMPER VMIN-HS	Positions damper to the minimum amount of opening allowed by actuator
DAMPER VMAX-HS	Opens damper to the MIN POS level indicated in the **SETPOINTS** menu. See Minimum Position Ventilation Setup Procedure (Pg. 16)
DAMPER OPEN	Forces damper to full open position, energizes exhaust contacts
DAMPER CLOSE	Positions damper to completely closed position
CONNECT Y1-O	Forces Y1-OUTPUT to compressor
CONNECT Y2-O	Forces Y2-OUTPUT to compressor
CONNECT AUX	Depending upon AUX OUT setting from **SETUP** menu: NONE – no action ERV – 24VAC out for ERV & NOT Economizer SYS – 24VAC out for alarm

NOTE: Economizer assembly should be ready to put into service. At any point during operation, in economizer mode or idle, real-time information from sensors and integral components can be accessed from the **STATUS** menu.

5. **STATUS:** from the main screen, press the ***SCROLL (UP/DOWN) BUTTONS*** to navigate through the six (6) basic menu items to the **STATUS** menu.

- Push the **SELECT (ENTER) BUTTON** to choose the **STATUS** menu.
- Navigate through the multiple levels of **STATUS** by pushing the ***SCROLL (UP/DOWN) BUTTONS***.
- As the **STATUS** menu simply gives input/output information in real-time, there is no way to change or otherwise alter the displayed criteria. It is simply a window into the operation of the economizer controller.
- For specific **STATUS** level information, refer to **Table 6**.

NOTE: Upon power-up (or after power failure or low voltage condition), the controller will begin a 5-minute time delay before enabling mechanical cooling.

TABLE 6
STATUS (Menu Levels)

MENU LEVEL	RANGE	NOTES
ECON AVAIL	YES/NO	Indicates if conditions are favorable for economizing
ECONOMIZING	YES/NO	Indicates if economizer is actively economizing
OCCUPIED	YES/NO	Indicates if economizer is actively economizing Indicates if dedicated 24V occupied signal is being received on terminal OCC
HEAT PUMP	COOL/HEAT	Displays actual compressor use if in HEAT PUMP mode
COOL Y1-IN	ON/OFF	Indicates if 24V signal is being received on terminal Y1-I
COOL Y1-OUT	ON/OFF	Displays if controller is actively calling for mechanical compressor cooling (24V on Y1-O)
COOL Y2-IN	ON/OFF	Indicates if 24V signal is being received on terminal Y2-I
COOL Y2-OUT	ON/OFF	Displays if controller is actively calling for Stg. 2 cooling (24V on Y2-O)
MA TEMP	0° to 140°F	Current mixed air temp
OA TEMP	-40° to 140°F	Current outdoor air temp
OA HUM	0% to 100%	Current outdoor air humidity for economizers using temp/humidity sensor
DAMPER OUT	2.0 to 10.0	Displays voltage to actuator
ACT POS	0 to 100%	Current % of opening
ACT COUNT	N/A	Current count of actuator cycles from installation
ACTUATOR OK	YES/NO	Indicates potential fault
EXH1 OUT	ON/OFF	Output of EXH1 Terminal
MECH COOL ON	0, 1, or 2	Stages of mechanical cooling currently active

NOTE: If there are any potential problems recognized by the economizer controller, it may be registered in the form of an alarm in the **ALARM(S)** menu. If there is a period of inactivity AND there is an alarm registering, the controller will randomly scroll through the **ALARM(S)** menu items as a screensaver.

ENTHALPY SETTINGS

If economizer is enthalpy-based, and was shipped with the temp/humidity sensor, the economizer must be programmed for the specific enthalpy curve boundary desired for “free” outdoor cooling. The available enthalpy boundaries are all subject to specific OA temperature, OA humidity, and OA dew points. If all of the OA conditions are below the specific points outlined in each boundary, the conditions are good to economize and economizer mode is set to “YES”. If some or all the OA conditions are above the specific points outlined in each boundary, the conditions are not good to economize and the economizer mode is set to “NO”.

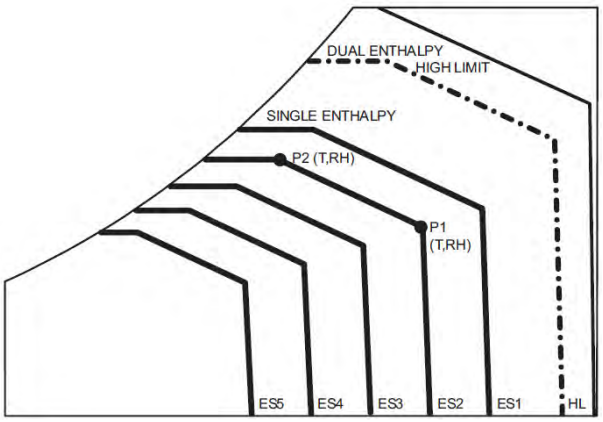

Enthalpy Curve	Temp. Dry Bulb (°F)	Temp. Dewpoint (°F)	Enthalpy (btu/lb/da)	Point P1		Point 2	
				Temp. °F	Humidity % RH	Temp. °F	Humidity % RH
ES1	80.0	60.0	28.0	80.0	36.8	66.3	80.1
ES2	75.0	57.0	26.0	75.0	39.6	63.3	80.0
ES3	70.0	54.0	24.0	70.0	42.3	59.7	81.4
ES4	65.0	51.0	22.0	65.0	44.8	55.7	84.2
ES5	60.0	48.0	20.0	60.0	46.9	51.3	88.5
HL	86.0	66.0	32.4	86.0	38.9	72.4	80.3

ALARM(S): from the main screen, press the ***SCROLL (UP/DOWN) BUTTONS*** to navigate through the six (6) basic menu items to the **ALARM(S)** menu.

– Push the **SELECT (ENTER) BUTTON** to choose the **ALARM(S)** menu.

– Navigate through the current alarms in **ALARM(S)** by pushing the ***SCROLL (UP/DOWN) BUTTONS***.

– Once the alarm has been identified, and the cause has been removed (e.g. replaced faulty sensor), the alarm may erase itself. If a manual alarm-erasing is required, it can be cleared from the display by navigating to the desired alarm and pressing the ***SELECT (ENTER) BUTTON*** to choose that specific alarm. **"ERASE?"** will display. Press the ***SELECT (ENTER) BUTTON*** again. **"ALARM ERASED"** will appear. Press the ***MENU UP (EXIT) BUTTON*** to complete the action and return to the previous menu.

– For specific **ALARM(S)** information, refer to **Table 7**.

TABLE 7
ALARMS (Examples)

Alarm(s)	Notes
MA T SENS ERR	Malfunctioning mixed air sensor
OA T SENS ERR	Malfunctioning outdoor air sensor
ACT STALLED	Actuator cannot reach desired percentage of opening
SYS ALARM	If AUX is set to SYS in SETPOINTS menu, SYS will display upon any registered alarm
NOTE: This is not a complete list of alarms. Additional alarms will display depending upon the parameter settings and configuration and attached equipment.	

ECONOMIZER SEQUENCE OF OPERATION

Condition — Cool / Dry OA Conditions

- 1st Stage Cooling closes and sends signal to **JADE™** control. Since the air temperature outside is cooler than the preset **DRYBULB SET** setting, or is below the **ENTH CURVE** boundary in the **SETPOINTS** menu, the actuator will power the economizer damper to "economizer" mode as the indoor blower motor starts. The mixed air sensor senses a mixture of return air and cool outdoor air and modulates opening to achieve preset **MAT SET** setting in **SETPOINTS** menu. Compressor operation is inhibited. (See Figure 12.)
- 2nd Stage Cooling closes and sends a signal to **JADE™** control, which closes the Y1-O relay to begin mechanical cooling. **The economizer damper REMAINS OPEN in tandem operation with the compressor** as long as the OA conditions do not drop below the preset **DRYBULB SET/ ENTH CURVE** settings in the **SETPOINTS** menu. (See Figure 13.)
- 3rd Stage Cooling (if available) closes and sends a signal to **JADE™** control, which closes the Y2-O relay to begin 2nd stage mechanical cooling. **The economizer damper REMAINS OPEN in tandem operation with the compressor** as long as the temperature outside does not drop below the preset **DRYBULB SET** setting in the **SETPOINTS** menu. (See Figure 13.)

Condition — Warm / Humid OA Conditions

- 1st Stage Cooling closes and sends signal to **JADE™** control. Since the OA conditions are above the preset **DRYBULB SET/ENTH CURVE** setting in the **SETPOINTS** menu, the control will simply close the Y1-O relay to initiate mechanical cooling. **The economizer damper will remain closed or in a minimum ventilation setting depending upon occupied status**. (See Figure 14.)
- 2nd Stage Cooling (if available) closes and sends a signal to **JADE™** control. Since the OA conditions are still above than the preset **DRYBULB SET/ENTH CURVE** setting in the **SETPOINTS** menu, the control will simply close the Y2-O relay to initiate 2nd stage mechanical cooling. **The economizer damper will remain closed or in a minimum ventilation setting depending upon occupied status**. (See Figure 14.)

FIGURE 12
100% OUTSIDE AIRFLOW PATH

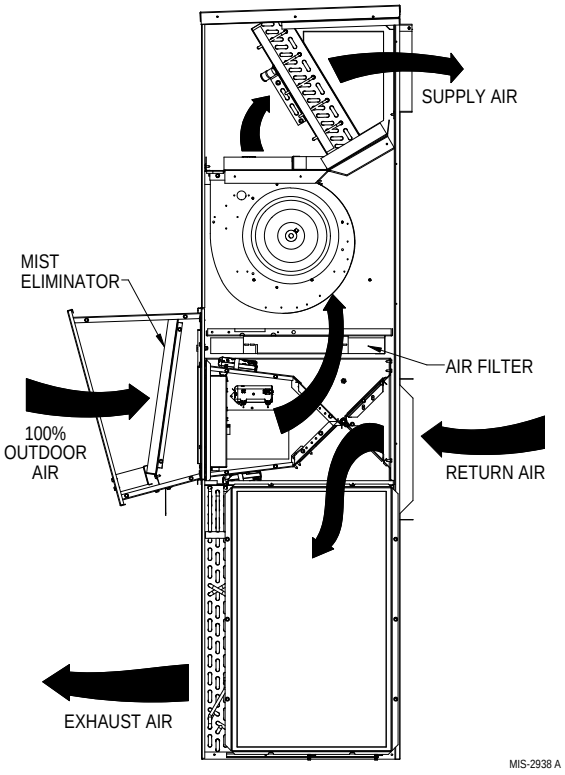

FIGURE 13
MIXED AIRFLOW PATH

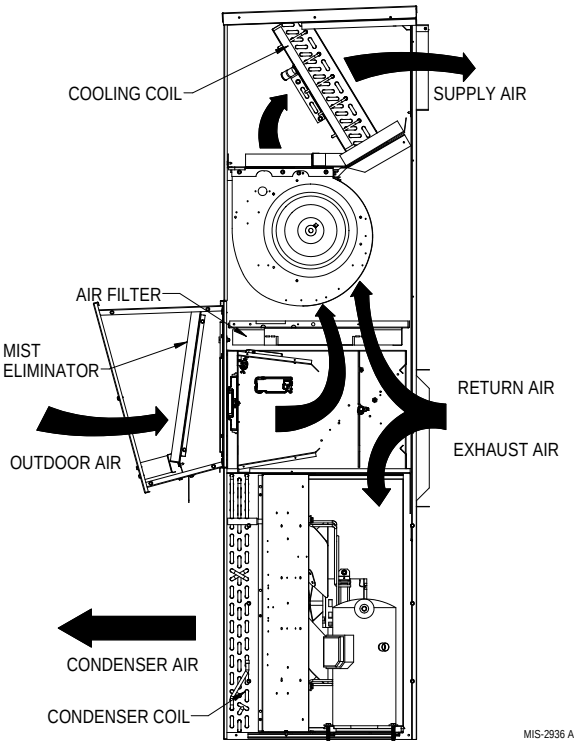

FIGURE 14
100% CLOSED LOOP AIRFLOW PATH

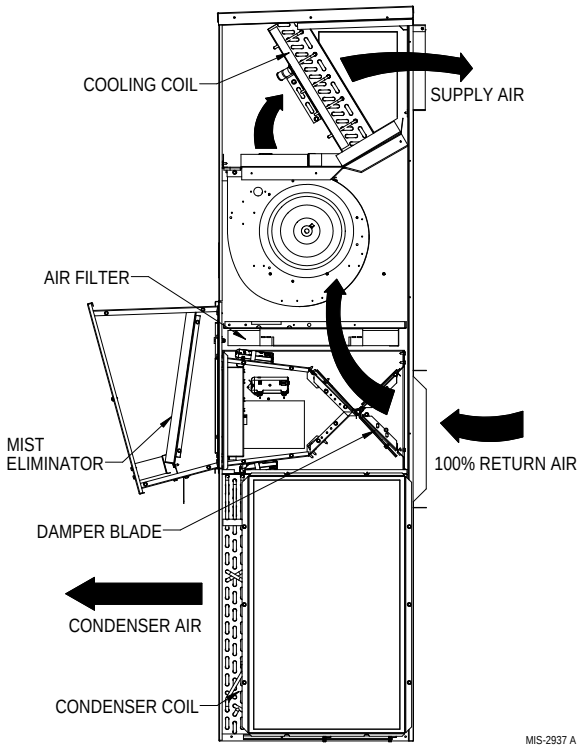

ECONOMIZER FEATURES

- One piece construction – easy to install. Direct-drive actuator eliminates linkage.
- Exhaust air damper – built in with positive closed position. Provides exhaust air capability to prevent pressurization of tight buildings.
- **JADE™** controller provides nearly limitless customization on a solid, intuitive electronic platform.
- Actuator Motor – 24 volt, power-open, spring-return, direct-coupled with stall protection. Self-centering shaft clamp and access cover facilitate ease of replacement/maintenance.
- Proportioning-type control – for maximum "free" cooling economy and comfort with up to 100% outside air.
- Drybulb sensor to monitor outdoor air temperature.
- Minimum Ventilation Position available for required ventilation of occupants or dilution of pollutants.
- Mixed air sensor to monitor outdoor and return air to automatically modulate damper position.

Economizer Operation for Single Stage:

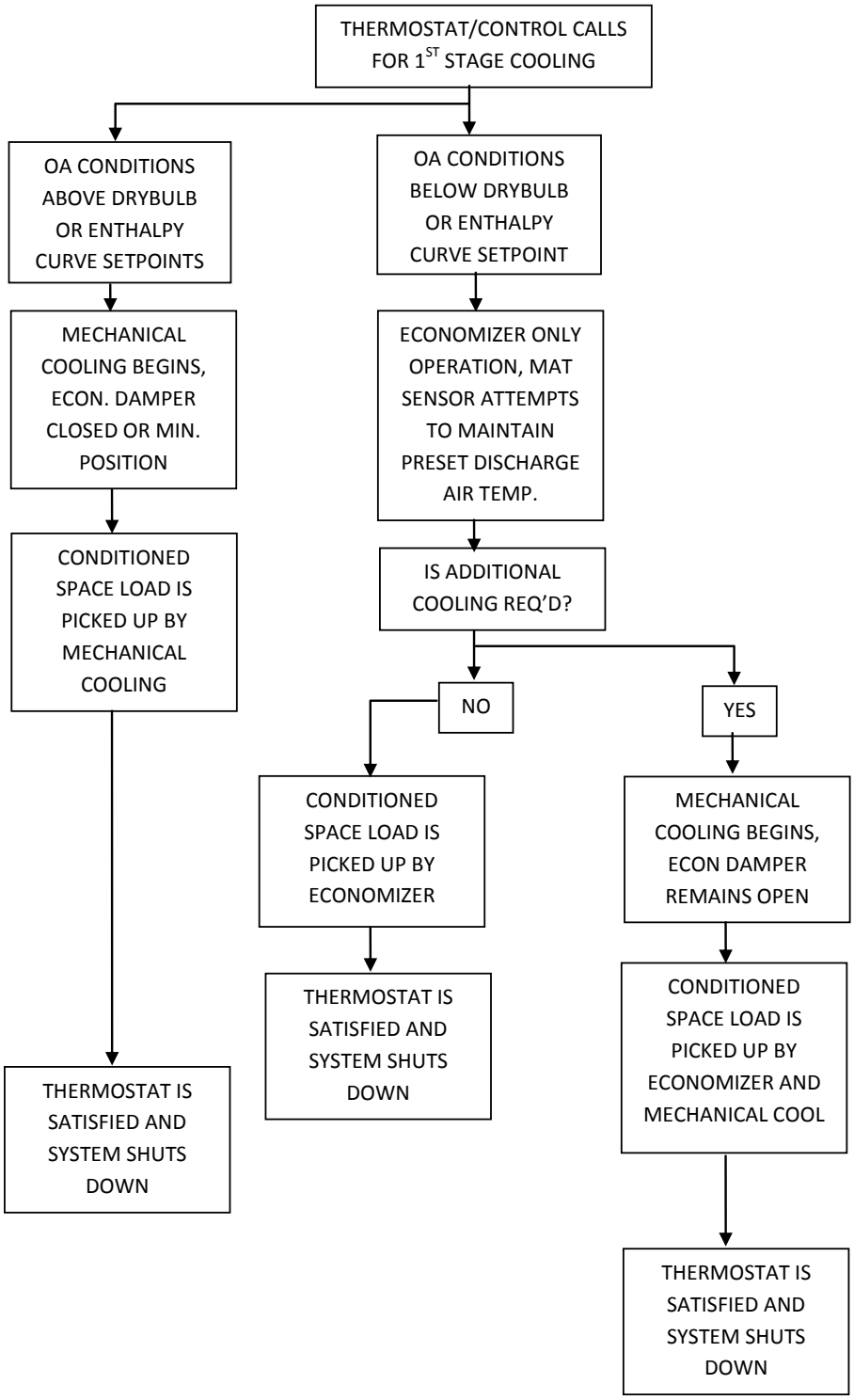
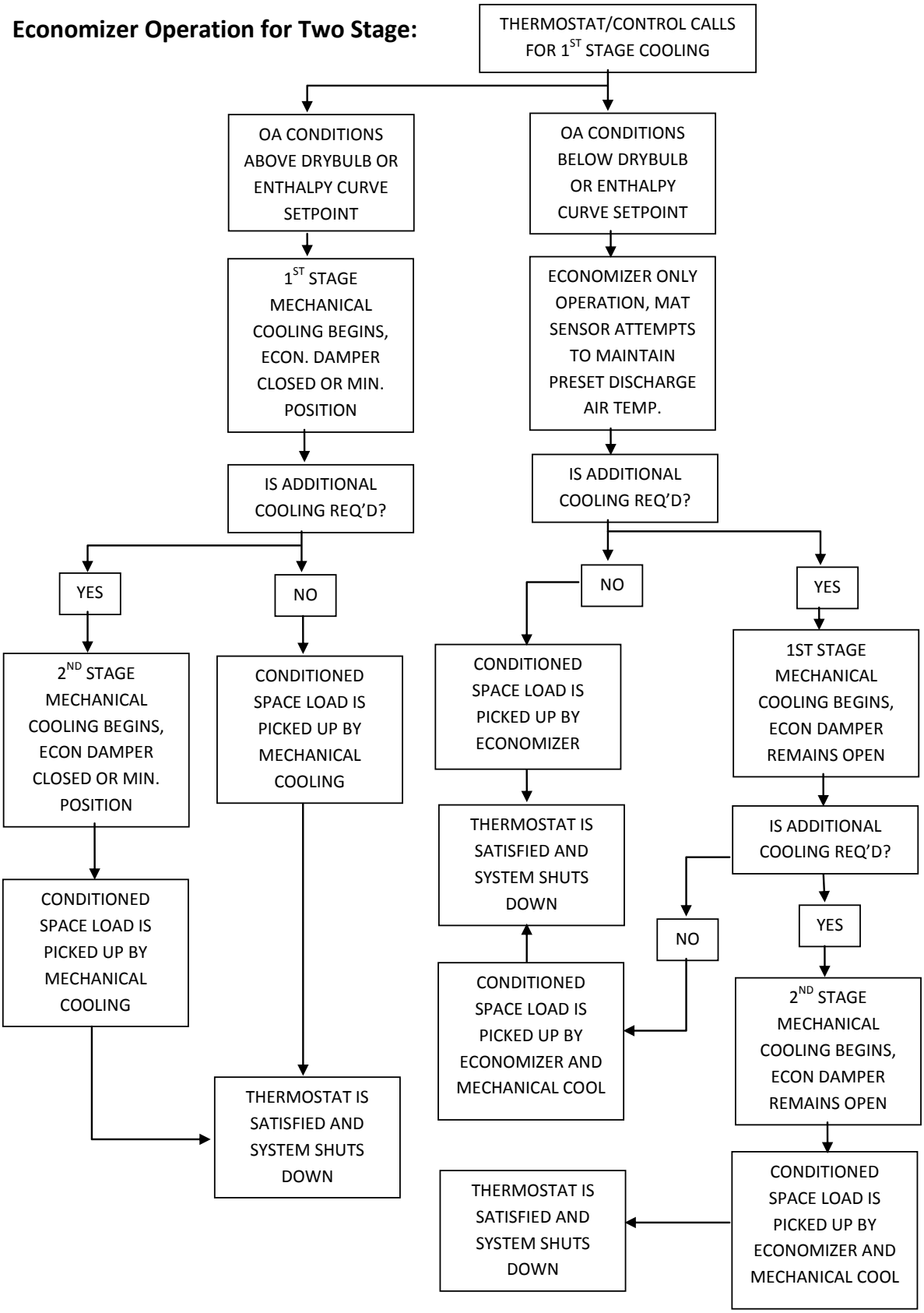
Economizer Operation for Two Stage: