INSTALLATION INSTRUCTIONS & REPLACEMENT PARTS LIST

MC4000 SERIES SOLID STATE DUAL UNIT LEAD/LAG CONTROLLER

Bard Manufacturing Company, Inc.
Bryan, Ohio 43506

Since 1914...Moving ahead, just as planned.

Manual No.: 2100-563B
Supersedes: 2100-563A
File: Vol. III Tab 19
Date: 10-20-11

CONTENTS

Getting Other Information and Publications 3
MC4000 General Information
Shipping Damage 4
General 4
Theory of Operation 4
Controller Certifications 4
Specifications/Features for Basic Controller
MC4000 Basic Controller 5
Mounting the Controller
Installation Instructions 5
Temperature Sensors
Two Optional Sensor Inputs 5
Temperature Sensor Logic
Using Multiple Sensors 5
Controller Input/Output Specifications
MC4000 Controller Connections 6
Specifications/Features for Alarm Boards
MC4000-A with Optional Base Alarm 6
MC4000-B with Enhanced Version Alarm 6
Low Voltage Field Wiring
Circuitry in the MC4000 7
Controller Grounding
Earth ground 7
Controller Power-Up
Time Delay on Power-Up 7
Fire Suppression Circuit
Disabling the MC4000 7
Staging Delay Periods
Stages 1 - 4 7
Blower Operation
Various Blower Options 7
Advance (Swap) Lead/Lag Unit Feature
Manual Switching of Units 7
Accelerate Timer Feature
Testing the Timer Function 7
General Programming Overview
Buttons & Function 8
Humidity Control Option
Adding Optional Humidity Control 9
Cooling Operating Sequences
for Alternating Lead/Lag/Lead/Lag Config 9-11
Cooling Operating Sequences
for Non-Alt Lead/Lead/Lag/Lag Config 11-13
Heating Sequence of Operation 13
Specifications Opt. Remote Comm. Board 14-15
CB4000 Communications Board 15
Controller Wiring
Refer to Connection Diagram 16
Security (Locking) Feature
Locking and Unlocking the MC4000 16
Generator Run Feature
Standby Generator Disable Operation 16
Backup DC Power Connection
Input Connections Available 16
Alarm Wiring 31
2nd Stage Cooling Alarm 31
Refrigerant Pressure Alarms 31
Emergency Ventilation Sequence 31
Programming Instructions 34

Figures

Figure 1 Controller Connections 1-Stage (WA/WL, W**A/W**L Series) A/C w/No Economizers 17
Figure 2 Controller Connections 2-Stage (WA*S/WL*S Series) A/C - No Economizers 18
Figure 3 Controller Connections 1-Stage (WA/WL, W**A/W**L Series) A/C - No Econo with Alarm Board & CB4000 Comm. Board 19
Figure 4 Controller Connections 2-Stage (WA*S/WL*S Series) A/C - No Econo with Alarm Board & CB4000 Comm. Board 20
Figure 5 Controller Connections 1-Stage (WA/WL, W**A/W**L Series) A/C-Older EIFM Econo 21
Figure 6 Controller Connections 2-Stage (WA*S/WL*S Series) A/C-Older Style EIFM Econo 22
Figure 7 Controller Connections 1-Stage (WA/WL, W**A/W**L Series) A/C w/Older Style EIFM Econo & w/Alarm Board/CB4000 Comm. Board ... 23
Figure 8 Controller Connections 2-Stage (WA*S/WL*S Series) A/C w/Older Style EIFM Econo & w/Alarm Board/CB4000 Comm. Board 24
Figure 9 Controller Connections 1-Stage (WA/WL, W**A/W**L Series) A/C w/ECONWMT Econo .. 25
Figure 10 Controller Connections 2-Stage (WA*S/WL*S Series) A/C w/ECONWMT Econo 26
Figure 11 Controller Connections 1-Stage (WA/WL, W**A/W**L Series) A/C w/ECONWMT Econo & w/Alarm Board/CB4000 Comm. Board 27
Figure 12 Controller Connections 2-Stage (WA*S/WL*S Series) A/C w/ECONWMT Econo & w/Alarm Board/CB4000 Comm. Board 28
Figure 13 Controller Connections Heat Pumps - No Economizers 29
Figure 14 Controller Connections Heat Pumps - No Economizers w/Opt. Alarm Board & CB4000 Communication Board 30
— — — Alarm LED Display Board 31
Figure 15 Alarm Board Connections for Normally Closed "NC" Open-On-Alarm Strategy 32
Figure 16 Alarm Board Connections for Normally Open "NO" Close-On-Alarm Strategy 33
— — — MC4000 Label 35
Figure 17 Parts List Description Diagram 36

Tables

Table 1 Hook-Up Diagram Selection 17
Table Parts List 37

Getting Other Information and Publications

These publications can help you install the air conditioner or heat pump. You can usually find these at your local library or purchase them directly from the publisher. Be sure to consult current edition of each standard.

Standard for the Installation ..... ANSI/NFPA 90A
of Air Conditioning and
Ventilating Systems

Standard for Warm Air Heating ..... ANSI/NFPA 90B
and Air Conditioning Systems

FOR MORE INFORMATION, CONTACT THESE PUBLISHERS:

ACCA **Air Conditioning Contractors of America**
1712 New Hampshire Avenue, NW
Washington, DC 20009
Telephone: (202) 483-9370
Fax: (202) 234-4721

ANSI **American National Standards Institute**
11 West Street, 13th Floor
New York, NY 10036
Telephone: (212) 642-4900
Fax: (212) 302-1286

ASHRAE **American Society of Heating, Refrigerating, and Air Conditioning Engineers, Inc.**
1791 Tullie Circle, N.E.
Atlanta, GA 30329-2305
Telephone: (404) 636-8400
Fax: (404) 321-5478

BARD **Bard Manufacturing Company, Inc.**
1914 Randolph Drive
Bryan, OH 43506
Telephone: (419) 636-1194
Fax: (419) 636-2640

** IMPORTANT **

The equipment covered in this manual is to be installed by trained, experienced service and installation technicians. Please read entire manual before proceeding.

SHIPPING DAMAGE

Upon receipt of equipment, the carton should be checked for external signs of shipping damage. If damage is found, the receiving party must contact the last carrier immediately, preferably in writing, requesting inspection by the carrier's agent.

GENERAL

These instructions explain the operation, installation and troubleshooting of the MC4000 controller.

All internal wiring is complete. Only attach low voltage field wiring to designated terminal strips.

The MC4000 is for use with units with or without economizers, can be configured for use with heat pumps, and has a dehumidification control feature if an optional humidity controller is connected.

Each unit should be sized to handle the total load of the structure if 100% redundancy is required.

It is recommended that a five (5) minute compressor time delay relay be installed in each unit if not so equipped.

The MC4000 controller is suitable for both 50 and 60 HZ operation, and is fully configurable such that it can be used in virtually any installation. See Controller Programmable Features and Default Settings.

THEORY OF OPERATION

The controller is used to control two wall mount air conditioners from one control system. It provides total redundancy for the structure and equal wear on both units. It can be used with units with or without economizers and it is recommended that both units be equipped alike.

The MC4000 controller can be configured for alternative (lead/lag/lead/lag) sequence, which is default setting. It can be changed to non-alternating (lead/lead/lag/lag) sequence as required for special applications or user preference.

The MC4000 can be equipped with one of two alarm boards, and these can be factory-installed or installed at any time in the field if so desired.

Should the base controller alone be initially installed, it is easily upgradeable by simple snap-in, plug-in field installation of either one of the alarm boards, requiring only the connection of the building alarm circuitry to the alarm boards. Form C dry contact alarm relays are used, offering both NO and NC switching to meet the user's specific alarm protocol, providing complete flexibility to meet any user's requirements. All alarm actuations are individually indicated on the controller front panel.

There is an Ethernet based remote communication option that can be either factory or field installed. See section on Communication Module.

CONTROLLER CERTIFICATIONS

The MC4000 main controller board, optional alarm boards, optional communication module, and remote sensors have undergone extensive testing for immunity and emissions. This system is FCC-compliant, in accordance with CE requirements, and meets the following standards:

MC4000 Series
Master Controller

This device complies with FCC Rule Part 15, Subpart B, Class A. Operation is subject to the following two conditions:

1. This device may not cause harmful interference
2. This device must accept any interference received, including that which may cause undesired operation.

This device complies with CE Standards EN55011/ EN50081 and EN55024 for ISM Equipment, Class A.

This ISM device also complies with Canadian ICES – 001.

Bard Manufacturing Company, Inc.
Bryan, OH 43506

SPECIFICATIONS/FEATURES FOR BASIC CONTROLLER

MC4000 Basic Controller

•Input power: 18-32 VAC, 60/50Hz, power is supplied from A/C #1 and/or A/C #2
•Isolation circuitry: no line or low voltage phasing required
•Backup power: connection for -24 VDC or -48 VDC (-20 to -56V) maintains microprocessor operation, front panel indication & alarm relay operation during commercial power outages.
•Digital display: 4-character LCD
•Temperature display: F or C
•HVAC outputs: Form A (NO) relays (1A @ 24 VAC)
•Cooling control stages:
  2 for each A/C unit (4 total) when configured for economizers
  1 for each A/C unit (2 total) when configured for no economizers
•Heating Control stages:
  1 for each A/C unit, 2 for each heat pump if so configured
•Dehumidification circuit: requires optional humidity controller as input signal
•Operating temperature range: 0 to 120F (-18 to 49C)
•Storage temperature range: -20 to 140F (-29 to 60C)
•Temperature accuracy: +/- 1F from 60-85F (16-30C)
  +/- 1% outside 60-85F
•Lead/lag changeover time: 0 to 30 days
•Timing accuracy: +/- 1%
•Inter-stage time delay: 10 seconds between stages
•Inter-stage differential:
  Stage 1 to 2 - Range 2-6F, default is 4
  Stage 2 to 3 - Range 2-3F, default is 2
  Stage 3 to 4 - Range 2-3F, default is 2
•On-Off differential: 2F (1C) is standard, 4F (3C) when "excessive cycling" mode is enabled
•Cooling set point range: 65 to 90F (18.3 to 32.2C)
•Comfort setting-Cooling 72F (22C), Heating 68F(20C), for 1 hour
•Dead band (difference between cooling and heating set points): 2F to 40F (1.1C to 22.2C)
•Fire/smoke interface: standard NC circuit jumper, remove for connection to building system control, shuts down both A/C units immediately
•Memory: EEPROM for set point and changeable parameters (maintains settings on power loss)
•Space temperature sensors: 1 local is standard, will accept up to 2 optional 25' remote sensors, Bard part number 8612-023. When multiple sensors are used, temperatures are averaged
•Controller Enclosure: 20-gauge pre-painted steel, 9.25"W x 13.50"H x 3.00"D, hinged cover, thirteen (13) .875" diameter electrical knockouts
•LEDs for basic controller: Lead unit, Cooling stages 1 through 4, Heating Stages 1 – 4, Dehumidification operation
•Six (6) Push-button controls: On/Off switch-Change lead unit-Increase & Decrease set points-Program/Save-Comfort.

MOUNTING THE CONTROLLER

Included in the controller carton is the controller and installation instructions.

The controller should be installed on a vertical wall approximately four (4) feet above the floor-away from drafts & outside doors or windows. Four (4) mounting holes are provided for mounting to the wall and 7/8" holes for conduit connections are provided in both the base, sides & top of the controller.

TEMPERATURE SENSORS

The standard (local) temperature sensor has 12" leads and comes installed from the factory.

A secondary sensor is located internally on the main controller board and serves as a reference and back-up sensor to the local sensor. Any differential of +/- 12F between the on-board and local sensor will cause the controller to use the local sensor as its point of reference. If the differential is greater than 12F then the controller will check to determine the on-board sensor is reading a temperature that is between the SP (set-point) plus 12F and the SP minus the DB (dead-band) minus 12F. If it is the on-board sensor will become the valid sensor reading and the controller will ignore the local sensor reading. If it is not then the controller will still use the local sensor reading. This is to add additional level of operational capability in the rare event the local sensor fails. If the controller is operating in this mode it is indicated by the lower left decimal point flashing in the display. ***Note: for purposes of testing when the local sensor is manually driven higher or lower by applying warm or cool water to the probe the on-board sensor is inhibited for the first 30-minutes following power up, or when power is cycled off and back on.***

The controller is designed to accept 1 or 2 additional sensors and those have 25-foot leads. The Bard part number for the optional sensor with 25-foot leads is 8612-023. These can be installed as required in the structure to address hot spots, barriers to airflow, etc.

It is recommended that the sensor lead wires be installed in conduit for protective purposes.

If alarm boards are utilized, the highest reading of any connected sensor will be used for high temperature alarm and the lowest reading sensor will be used for low temperature alarm.

NOTE: **All sensors are polarity sensitive. The copper lead must connect to terminal CU, and the silver lead to AG. Sensors are solid state, not RTD. Use only sensors supplied by Bard. Sensor leads can be extended up to 200 feet. Use 18-gauge twisted pair with soldered connections.**

TEMPERATURE SENSOR LOGIC

The standard local **(LSEn)** sensor monitors the temperature at the controller location. If this is the only sensor connected, it will control the temperature read-out, the space (building) temperature, and also be used for Low and High Temperature alarm functions.

If one or more **REMOTE** sensors are installed and connected (**Rem 1** or **Rem 2**), the temperature read-out will display and the building will be controlled to an **average** of all connected sensors. If there is more than 10F difference from the highest to the lowest connected sensor, the actual control will be governed by the hottest sensor for cooling and the coldest sensor for heating.

If multiple temperature sensors are used, the High and Low temperature alarms will be governed by the average of the connected sensors.

BASIC MC4000 CONTROLLER INPUT/OUTPUT SPECIFICATIONS

MC4000 CONTROLLER CONNECTIONS

Located on Main Controller Board

Unit #1	C – 24VAC common R – 24VAC hot G – fan (Form A, NO) Y1 – 1st-stage cool (Form A, NO) Y2 – 2nd-stage cool (Form A, NO) W – heat (Form A, NO)
Unit #2	C – 24VAC common R – 24VAC hot G – fan (Form A, NO) Y1 – 1st-stage cool (Form A, NO) Y2 – 2nd-stage cool (Form A, NO) W – heat (Form A, NO)
F1-F2	Fire/smoke interface Shipped with jumper installed (a)
48Vdc	Back-up power input -24Vdc or –48Vdc -20V to –56V range
Local	Main sensor, 12-inch leads CU – copper, AG – silver Polarity sensitive
Rem 1	Optional remote indoor sensor CU – copper, AG – silver Polarity sensitive
Rem 2	Optional remote indoor sensor CU – copper, AG – silver Polarity sensitive
Gen	Generator interface G1-G2 Shipped with jumper installed (a)
H1-H2	Humidity controller input Requires optional controller Field installed

NOTE:
Sensors are solid state, not RTD.
Use Bard sensors only.

(a) These connections require either jumper or Normally Closed (NC) relay contact at the Fire/Smoke and Generator interface for Controller to function.

Note: All alarm and output relays are dry contacts rated 1A @ 24 VAC.

Note: All alarm relay outputs have 10-second delay before issuing to protect against nuisance alarm signals.

SPECIFICATIONS/FEATURES FOR ALARM BOARDS

MC4000-A w/Optional Base Alarm Board (Inputs/Outputs)

NOTE: If this alarm board was not originally factory installed, it can be field-installed at anytime. Bard part number is AB3000-A.

Inputs	
Lockout 1	2,3 – input from HVAC #1
Lockout 2	2, 3 – input from HVAC #2
Outputs	
Smoke/Fire	Form C (SPDT)
Lockout 1	Form C (SPDT) Refrigerant alarm HVAC #1
Lockout 2	Form C (SPDT) Refrigerant alarm HVAC #2
Power Loss 1	Form C (SPDT) Power loss HVAC #1
Power Loss 2	Form C (SPDT) Power loss HVAC #2
Low Temp	Form C (SPDT) Low temperature alarm
High Temp 1	Form C (SPDT) High temperature alarm #1

MC4000-B w/Enhanced Version Alarm Board (Additional Outputs) plus MC4000-A Inputs/Outputs

NOTE: If this alarm board was not originally factory installed, it can be field-installed at anytime. Bard part number is AB3000-B.

High Temp 2	Form C (SPDT) High temperature alarm #2
Controller	Form C (SPDT) Controller failure alarm
Econ 1	E, F - Form A (NO) See note (b)
Econ 2	E, F - Form A (NO) See note (b)
2nd Stage (c)	Form C (SPDT) 2nd-stage cooling alarm

(b) Make these connections to terminals E & F in HVAC 1 and 2 respectively if desired to have economizers open for emergency ventilation at High Temp Alarm #2 setpoint condition.

(c) For units with 2-stage compressors, 2nd stage cooling alarm activates on cooling Stage 3 initiation.

Alarm relays can be wired for NO (close on alarm) or NC (open on alarm) strategy. Alarm relays can be used individually if there are enough available building alarm points, or can be arranged into smaller groups or even a single group so that all alarm capabilities can be utilized. When multiple alarms are grouped together and issued as a single alarm there will be no off-site indication of which specific problem may have occurred, only that one of the alarms in the group has been triggered. The individual alarm problem will be displayed on the LED display on face of the controller.

LOW VOLTAGE FIELD WIRING

The MC4000 is powered from the air conditioners that it is controlling, 24 VAC (18-32V) low voltage only.

Circuitry in the MC4000 isolates the power supplies of the two air conditioners so that no back feeds or phasing problems can occur. Additionally, if one air conditioner loses power, the MC4000 and the other air conditioner are unaffected and will continue to operate normally.

Connect the low voltage field wiring from each unit per the low voltage field wiring diagrams in Section on "Controller Wiring". *NOTE: Maximum of 18-gauge control wiring should be used. Using heavier gauge wiring can create excessive stress on the control board as door is opened and closed. Create a wiring loop so the door can open and close without stressing terminal blocks.*

CONTROLLER GROUNDING

A reliable earth ground must be connected in addition to any grounding from conduit. Grounding lugs are supplied for this purpose.

CONTROLLER POWER-UP

Whenever power is first applied to the controller, there is a twenty (20) second time-delay prior to any function (other than display) becoming active. This time-delay is in effect if the controller On/Off button is used when 24VAC from air conditioners is present, and also if controller is in "ON" position and 24VAC from air conditioners is removed and then restored.

FIRE SUPPRESSION CIRCUIT

To disable the MC4000 and shut down both air conditioners, terminals F1 and F2 may be used. The F1 and F2 terminals must be jumpered together for normal operation. A normally closed (nc) set of dry contacts may be connected across the terminals and the factory jumper removed for use with a field-installed fire suppression system. The contacts must open if a fire is detected. See appropriate connection diagram - Figures 1, 2 or 3 for this connection. Contacts should be rated for pilot duty operation at 2 amp 24VAC minimum. Shielded wire (22-gauge minimum) must be used, and the shield must be grounded to the controller enclosure.

IMPORTANT NOTE: Older Bard R-22 models employ an electronic blower control that has a 60-second blower off-delay. Current production R-410A models do not use a blower off-delay device and the remainder of this (paragraph) does not apply. In order to have immediate shutdown of the blower motor, in addition to disabling the run function of the air conditioners will require a simple wiring modification at the blower control located in the electrical control panel of the air conditioners being controlled by the lead/lag controller. To eliminate the 60-second blower off-delay, disconnect and isolate the wire that is factory-connected to the "R" terminal on the electronic blower control, and then connect a jumper from the "G" terminal on the blower control to the "R" terminal on the blower control. The electronic blower control will now function as an on-off relay with no off-delay, and the blower motor will stop running immediately when the F1-F2 fire suppression circuit is activated (opened).

STAGING DELAY PERIODS

The following delays are built in for both cooling & heating:

Stage 1 – 0 seconds for blower (if not already on as continuous)
10 seconds for cooling or heating output

Stage 2 – 10 seconds after Stage 1 for blower
10 additional seconds for cooling or heating output

Stage 3 – 10 seconds after Stage 2

Stage 4 – 10 seconds after Stage 3

Note: For cooling Stages 1 and 2, the stage LED will blink for 10 seconds while the cooling output is delayed after that stage is called for. There is also a delay after the stage is satisfied, and after the LED stops blinking, the stage will turn off. There is a minimum 10-second delay between stages 2 & 3, and 3 & 4, but no delayed output when stage is turned on or off, and LED for those stages will not blink.

BLOWER OPERATION

The controller can be configured to have main HVAC blowers cycle on and off on demand; have all blowers run continuously; or have the lead unit blower run continuously with the lag unit blower cycling on demand. Default setting is the blower(s) start and stop on demand. There is also an option to have all blowers cycle on if one remote sensor is connected, and a temperature difference of more than 5F between any two sensors is observed. This helps to redistribute the heat load within the structure and should reduce compressor operating time.

When any of the stages are satisfied, the stage LED will blink for ten (10) seconds before the stage is actually turned off.

ADVANCE (SWAP) LEAD/LAG UNIT FEATURE

Pressing the Advance button for one (1) second will cause the lead and lag units to change positions. This may be useful during service and maintenance procedures.

ACCELERATE TIMER FEATURE

Pressing the UP arrow button for five (5) seconds will activate an accelerate (speed-up) mode, causing the normal changeover time increments of days to be reduced to seconds. Example: 7 days becomes 7 seconds. When "ACC" displays, release button. Whichever LED is on, indicating lead unit will blink over for each second until the controller switches. This is a check for the timer functionality.

GENERAL PROGRAMMING OVERVIEW
MC4000 CONTROLLER BUTTONS AND FUNCTION

On/Off Button

1. Press and release the On/Off button to turn On controller, 4-character display will illuminate and Lead unit LED will light.
2. Press and release the On/Off button to turn Off controller. Controller will go dark and A/C units will stop.

Comfort Button

1. Press and release the Comfort button to change the Cooling Set Point to 72F and the Heating Set Point to 68F for a period of 1 hour.
2. Set Points will return to the programmed settings automatically after 1 hour.
3. Pressing the Comfort button during the 1 hour period will deactivate the Set Point change.
4. The temperature display will flash the current temperature while in override mode.

Program Button

1. Press the Program button and release it when the message “Prog” appears on the display.
2. Refer to Programming Instructions and follow these commands to change from Default settings.

Advance/Change/Save Button

1. Press and release the Advance button to swap lead and lag unit positions.
2. When in Program mode the Down and Up buttons are used to scroll through the programming steps.
3. A flashing display means that the particular function of that programming step is “set”, and the display will alternate between the step function and the setting.
4. To change the setting press the Change button and the display will stop flashing, allowing change to the setting.
5. Use Down or Up arrows to change setting as desired, and press the Save button and proceed as desired.
6. When done with programming changes press the Program button until display stops flashing and room temperature is shown.

Up and Down Buttons

These buttons are used to change the settings in conjunction with the Advance/Change/Save button when in programming mode.

CONTROLLER PROGRAMMABLE FEATURES AND DEFAULT SETTINGS

Order / Display	Description	Range / Choice	Default
LSEn	Temperature at local (main) sensor	—	—
SP	Cooling set point temperature	65 to 90F (18 to 32C)	77F (25C)
db	Deadband between cooling SP and heating set point	2 to 40F (1 to 24C)	17F (9.4C)
r1	Temperature at remote sensor 1 location, if connected	—	—
r2	Temperature at remote sensor 2 location, if connected	—	—
cFAn	Continuous blower operation	None, Lead, Both	None
deg	Controller system operates in F or C	F or C	F
Alt	Alternating Lead-Lag-Lead-Lag sequence or Non-Alternating Lead-Lead-Lag-Lag sequence — Yes = Alternating	Yes or No	Yes
LLCO	Lead-Lag changeover time (Days)	1 - 30 days, or 0 for disabled	7
HP	Heat pump logic enabled — only for 1-stage heat pumps and forces Lead-Lag sequence (overrides a Non-Alt setting)	Yes or No	No
Cbd5	Unit 1 and 2 blowers automatically both run if delta T >5F between any 2 connected sensors	Yes or No	Yes
OFde	3-minute lead unit & 4-minute lag unit off-delay enabled	Yes or No	No
crun	Minimum 3-minute compressor runtime enabled	Yes or No	No
LoAL	Low temperature alarm setpoint	28 to 65F (-2 to 18C)	45F (7.2C)
HAL1	High temperature alarm level #1 setpoint	70F to 120F (21 to 49C)	90F (32C)
HAL2	High temperature alarm level #2 setpoint	70F to 120F (21 to 49C)	95F (35C)
Locd	Controller is locked and no changes can be made. Consult building authority.	If locked, display will show Locd if changes attempted	Unlocked
Inter-Stage Differential			
lSd2	From Stage 1 to Stage 2	2, 3, 4, 5 or 6F	4
lSd3	From Stage 2 to Stage 3	2 or 3F	2
lSd4	From Stage 3 to Stage 4	2 or 3F	2
On/Off Differential (Hysterisis)			
CSon	Turn "On" above SP for Stage 1 Cooling	+1 or 2F	2
CSoF	Turn "Off" below SP for Stage 1 Cooling	-1, 2, 3 or 4F	-2
	Stage 2, 3 and 4 Cooling automatically set same as Stage 1 decisions		
HSoo	All Heating Stages are equal -/+ on & off differential	-1/+1 or -2/+2	-2/+2
CoPr	1 or 2-stage compressor, if set to 1 the 2nd stage Cooling Alarm activates on Cooling Call 2, if set to 2 the 2nd stage Cooling Alarm activates on Cooling Call 3	1 or 2	1

HUMIDITY CONTROL OPTION

Note: *This function is not available if controller is configured for heat pump.*

The standard air conditioning system can be adapted to perform dehumidification control by addition of a simple humidity controller that closes-on-rise, and is connected to terminals H1 and H2 on the main controller board. Recommended Bard Part #8403-038 (H600A 1014). Both HVAC units must be equipped with electric heat for this sequence to work properly. See appropriate connection diagram - Figures 1 - 12 for this connection:

1. Temperature control always has priority over dehumidification. If there is any stage of cooling demand active, the dehumidification sequence is locked out.
2. If all stages of cooling are satisfied, and relative humidity is above the set point of humidity controller:
   a. The green "Dehumid. Operation" light will come on, and the lag unit compressor and blower will operate until the set point of humidity controller is satisfied (or cancelled by a call for cooling).
   b. If the space temperature drops to 67F, the electric heater of the lead unit will cycle to help maintain building temperature. It will cycle off at 69F.
   c. If space temperature drops to 64F, the Stage 2 Heating light will come on and the lag unit compressor operating for dehumidification mode will cycle off until the building temperature rises above 65F from 1st stage heat and building load. The green "Dehumid. Operation" light stays on during this sequence, and when Stage 2 Heating light is Off, the compressor is On. The electric heater in lag unit is locked out in dehumidification mode.

Lag unit outputs G, Y1 and Y2 are all switched on during dehumidification sequence. This is true for both alternating and non-alternating controller configurations.

⚠ CAUTION

Humidity controller set point should be in 50-60% relative humidity area: Setting controller to lower settings will result in excessive operating time and operating costs for the electric reheat, and in extreme cases could cause evaporator (indoor) coil freeze-up if there are periods of light internal equipment (heat) loading.

COOLING OPERATING SEQUENCES FOR ALTERNATING LEAD/LAG/LEAD/LAG CONFIGURATION

1. 1-Stage Compressor Units No Economizer

1st stage cooling set point is the setting (SP) input into the controller. Factory default is 77F (25C). On a call for cooling the blower of the lead unit will come on immediately (if not already on – See Blower Operation), and the Stage 1 LED will blink for 10-seconds before going solid, at which time the compressor will start.

2nd cooling set point is 4F (default setting, user selectable 2-6F) warmer than Stage 1. On a call for 2nd Stage cooling the blower of the lag unit is turned on (if not already on – See Blower Operation), and the Stage 2 LED will blink for 10-seconds before going solid, at which time the compressor will start.

3rd and 4th stages are functional outputs but there is nothing to be controlled.

2. 2-Stage Compressor Units No Economizer

1st stage cooling set point is the setting (SP) input into the controller. Factory default is 77F (25C). On a call for cooling the blower of the lead unit will come on immediately (if not already on – See Blower Operation), and the Stage 1 LED will blink for 10-seconds before going solid, at which time the lead unit compressor will start in compressor Stage 1 partial capacity operation.

2nd cooling set point is 4F (default setting, user selectable 2-6F) warmer than Stage 1. On a call for 2nd Stage cooling the blower of the lag unit is turned on (if not already on – See Blower Operation), and the Stage 2 LED will blink for 10-seconds before going solid, at which time the lag unit compressor will start in compressor Stage 1 partial capacity operation.

3rd cooling set point is 2F (default setting, user selectable 2-3F) warmer than Stage 2. On a call for 3rd Stage cooling the Stage 3 LED comes on solid (no delay), and the lead unit compressor will switch to compressor Stage 2 full capacity operation.

4th cooling set point is 2F (default setting, user selectable 2-3F) warmer than Stage 3. On a call for 4th Stage cooling the Stage 4 LED comes on solid (no delay), and the lag unit compressor will switch to compressor Stage 2 full capacity operation.

3. 1-Stage Compressor Units with Older EIFM Economizers (Enthalpy OD Sensor)

1st stage cooling set point is the setting (SP) input into the controller. Factory default is 77F (25C). On a call for cooling the blower of the lead unit will come on immediately (if not already on – See Blower Operation), and the Stage 1 LED will blink for 10-seconds before going solid, at which time the lead unit Y1 cooling output turns on. If the outdoor temperature and humidity conditions are below the set point of the economizer control the lead unit economizer will operate instead of the compressor. If outdoor conditions are not acceptable for free cooling the compressor will automatically operate instead of the economizer.

2nd cooling set point is 4F (default setting, user selectable 2-6F) warmer than Stage 1. On a call for 2nd Stage cooling the blower of the lag unit is turned on (if not already on – See Blower Operation), and the Stage 2 LED will blink for 10-seconds before going solid, at which time the lag unit Y1 cooling output turns on. If the outdoor temperature and humidity conditions are below the set point of the economizer control the lag unit economizer will operate instead of the compressor. If outdoor conditions are not acceptable for free cooling the compressor will automatically operate instead of the economizer.

3rd cooling set point is 2F (default setting, user selectable 2-3F) warmer than Stage 2. On a call for 3rd Stage cooling the lead unit economizer will close and the compressor will operate.

4th cooling set point is 2F (default setting, user selectable 2-3F) warmer than Stage 3. On a call for 4th Stage cooling the lag unit economizer will close and the compressor will operate.

4. 1-Stage Compressor Units with Newer ECONWMT Economizers (See Note A)

1st stage cooling set point is the setting (SP) input into the controller. Factory default is 77F (25C). On a call for cooling the blower of the lead unit will come on immediately (if not already on – See Blower Operation), and the Stage 1 LED will blink for 10-seconds before going solid, at which time the lead unit Y1 cooling output turns on. If the outdoor temperature and humidity conditions are below the set point of the economizer control the lead unit economizer will operate instead of the compressor. If outdoor conditions are not acceptable for free cooling the compressor will automatically operate instead of the economizer.

2nd cooling set point is 4F (default setting, user selectable 2-6F) warmer than Stage 1. On a call for 2nd Stage cooling the blower of the lag unit is turned on (if not already on – See Blower Operation), and the Stage 2 LED will blink for 10-seconds before going solid, at which time the lag unit Y1 cooling output turns on. If the outdoor temperature and humidity conditions are below the set point of the economizer control the lag unit economizer will operate instead of the compressor. If outdoor conditions are not acceptable for free cooling the compressor will automatically operate instead of the economizer.

3rd cooling set point is 2F (default setting, user selectable 2-3F) warmer than Stage 2. On a call for 3rd Stage cooling the lead unit economizer will continue to operate as long as outdoor conditions are acceptable, and the compressor will operate.

4th cooling set point is 2F (default setting, user selectable 2-3F) warmer than Stage 3. On a call for 4th Stage cooling the lag unit economizer will continue to operate as long as outdoor conditions are acceptable, and the compressor will operate.

5. 2-Stage Compressor Units with Older EIFM Economizers

1st stage cooling set point is the setting (SP) input into the controller. Factory default is 77F (25C). On a call for cooling the blower of the lead unit will come on immediately (if not already on – See Blower Operation), and the Stage 1 LED will blink for 10-seconds before going solid, at which time the lead unit Y1 cooling output turns on. If the outdoor temperature and humidity conditions are below the set point of the economizer control the lead unit economizer will operate instead of the compressor. If outdoor conditions are not acceptable for free cooling the compressor will automatically operate on compressor Stage 1 partial capacity instead of the economizer.

2nd cooling set point is 4F (default setting, user selectable 2-6F) warmer than Stage 1. On a call for 2nd Stage cooling the blower of the lag unit is turned on (if not already on – See Blower Operation), and the Stage 2 LED will blink for 10-seconds before going solid, at which time the lag unit Y1 cooling output turns on. If the outdoor temperature and humidity conditions are below the set point of the economizer control the lag unit economizer will operate instead of the compressor. If outdoor conditions are not acceptable for free cooling the compressor will automatically operate on compressor Stage 1 partial capacity instead of the economizer.

3rd cooling set point is 2F (default setting, user selectable 2-3F) warmer than Stage 2. On a call for 3rd Stage cooling the lead unit economizer will close and the compressor will operate on full capacity compressor Stage 2.

4th cooling set point is 2F (default setting, user selectable 2-3F) warmer than Stage 3. On a call for 4th Stage cooling the lag unit economizer will close and the compressor will operate on full capacity compressor Stage 2.

6. 2-Stage Compressor Units with Newer ECONWMT Economizers (See Note A)

1st stage cooling set point is the setting (SP) input into the controller. Factory default is 77F (25C). On a call for cooling the blower of the lead unit will come on immediately (if not already on – See Blower Operation), and the Stage 1 LED will blink for 10-seconds before going solid, at which time the lead unit Y1 cooling output turns on. If the outdoor temperature and humidity conditions are below the set point of the economizer control the lead unit economizer will operate instead of the compressor. If outdoor conditions are not acceptable for free cooling the compressor will automatically operate on compressor Stage 1 partial capacity instead of the economizer.

2nd cooling set point is 4F (default setting, user selectable 2-6F) warmer than Stage 1. On a call for 2nd Stage cooling the blower of the lag unit is turned on (if not already on – See Blower Operation), and the Stage 2 LED will blink for 10-seconds before going solid, at which time the lag unit Y1 cooling output turns on. If the outdoor temperature and humidity conditions are below the set point of the economizer control the lag unit economizer will operate instead of the compressor. If outdoor conditions are not acceptable for free cooling the compressor will automatically operate on compressor Stage 1 partial capacity instead of the economizer.

3rd cooling set point is 2F (default setting, user selectable 2-3F) warmer than Stage 2. On a call for 3rd Stage cooling the lead unit economizer will continue to operate as long as outdoor conditions are acceptable, and the compressor will operate on compressor Stage 1 partial capacity. If outdoor conditions are not acceptable for free cooling the lead unit compressor will automatically be operating on compressor Stage 1 partial capacity and will go to Stage 2 full capacity operation.

4th cooling set point is 2F (default setting, user selectable 2-3F) warmer than Stage 3. On a call for 4th Stage cooling the lag unit economizer will continue to operate as long as outdoor conditions are acceptable, and the compressor will operate on compressor Stage 1 partial capacity. If outdoor conditions are not acceptable for free cooling the lag unit compressor will automatically be operating on compressor Stage 1 partial capacity and will go to Stage 2 full capacity operation.

COOLING OPERATING SEQUENCES FOR NON-ALTERNATING LEAD/LEAD/LAG/ LAG CONFIGURATION

Note: *Heat pumps cannot be operated in Non-Alternating Lead/Lead/Lag/Lag sequence. Selecting Heat Pump = Yes will override a Non-Alternating selection and force system to Alternating Lead/Lag/Lead/Lag sequence.*

1. 2-Stage Compressor Units No Economizer

1st stage1st stage cooling set point is the setting (SP) input into the controller. Factory default is 77F (25C). On a call for cooling the blower of the lead unit will come on immediately (if not already on – See Blower Operation), and the Stage 1 LED will blink for 10-seconds before going solid, at which time the lead unit compressor will start in compressor Stage 1 partial capacity operation.

2nd cooling set point is 4F (default setting, user selectable 2-6F) warmer than Stage 1, at which time the lead unit compressor will switch to compressor Stage 2 full capacity.

3rd cooling set point is 2F (default setting, user selectable 2-3F) warmer than Stage 2. On a call for 3rd Stage cooling the blower of the lag unit will come on immediately (if not already on – See Blower Operation), and Stage 3 LED will blink for 10-seconds before going solid, and then the lag unit compressor will start in compressor Stage 1 partial capacity.

4th cooling set point is 2F (default setting, user selectable 2-3F) warmer than Stage 3. On a call for 4th Stage cooling the Stage 4 LED comes on solid (no delay), and the lag unit compressor will switch to compressor Stage 2 full capacity operation.

2. 1-Stage Compressor Units with Older EIFM Economizers

1st stage cooling set point is the setting (SP) input into the controller. Factory default is 77F (25C). On a call for cooling the blower of the lead unit will come on immediately (if not already on – See Blower Operation), and the Stage 1 LED will blink for 10-seconds before going solid, at which time the lead unit Y1 cooling output turns on. If the outdoor temperature and humidity conditions are below the set point of the economizer control the lead unit economizer will operate instead of the compressor. If outdoor conditions are not acceptable for free cooling the compressor will automatically operate instead of the economizer.

2nd cooling set point is 4F (default setting, user selectable 2-6F) warmer than Stage 1. On a call for 2nd Stage cooling the lead unit Y2 cooling output turns on. The lead unit economizer will close and the compressor will operate. If the compressor is already running from 1st stage cooling call due to outdoor conditions being outside of free cooling range no action occurs at 2nd stage set point.

3rd cooling set point is 2F (default setting, user selectable 2-3F) warmer than Stage 2. On a call for 3rd Stage cooling the blower of the lag unit is turned on (if not already on – See Blower Operation), and the Stage 3 LED will blink for 10-seconds before going solid, and the lag unit economizer will operate if the outdoor temperature and humidity conditions are below the set point of the economizer control. If outdoor conditions are not acceptable for free cooling the compressor will automatically operate instead of the economizer.

4th cooling set point is 2F (default setting, user selectable 2-3F) warmer than Stage 3. On a call for 4th Stage cooling the lag unit economizer will close and the compressor will operate. If the compressor is already running from 3rd stage cooling call due to outdoor conditions being outside of free cooling range no action occurs at 2nd stage set point.

3. 1-Stage Compressor Units with Newer ECONWMT Economizers (See Note A)

1st stage cooling set point is the setting (SP) input into the controller. Factory default is 77F (25C). On a call for cooling the blower of the lead unit will come on immediately (if not already on – See Blower Operation), and the Stage 1 LED will blink for 10-seconds before going solid, at which time the lead unit Y1 cooling output turns on. If the outdoor temperature and humidity conditions are below the set point of the economizer control the lead unit economizer will operate instead of the compressor. If outdoor conditions are not acceptable for free cooling the compressor will automatically operate instead of the economizer.

2nd cooling set point is 4F (default setting, user selectable 2-6F) warmer than Stage 1. On a call for 2nd stage cooling the lead unit Y2 cooling output turns on. If the outdoor temperature and humidity conditions are below the set point of the economizer control the lead unit economizer will continue to operate, and the compressor will operate. If the compressor is already operating on 1st stage cooling because outside free cooling range no action occurs at 2nd cooling set point.

3rd cooling set point is 2F (default setting, user selectable 2-3F) warmer than Stage 2. On a call for 3rd Stage cooling the blower of the lag unit will come on immediately (if not already on – See Blower Operation), and the Stage 3 LED will blink for 10-seconds before going solid, at which time the lag unit Y1 cooling output turns on. The lag unit economizer will operate if the outdoor temperature and humidity conditions are below the set point of the economizer control. If outdoor conditions are not acceptable for free cooling the compressor will automatically operate instead of the economizer.

4th cooling set point is 2F (default setting, user selectable 2-3F) warmer than Stage 3. On a call for 4th Stage cooling the lag unit Y2 cooling output turns on activating the lag unit compressor. If the outdoor temperature and humidity conditions are below the set point of the economizer control the lag unit economizer will continue to operate. If the compressor is already operating on 3rd stage cooling because outside free cooling range no action occurs at 4th cooling set point.

4. 2-Stage Compressor Units with Older EIFM Economizers

1st stage cooling set point is the setting (SP) input into the controller. Factory default is 77F (25C). On a call for cooling the blower of the lead unit will come on immediately (if not already on – See Blower Operation), and the Stage 1 LED will blink for 10-seconds before going solid, at which time the lead unit Y1 cooling output turns on. If the outdoor temperature and humidity conditions are below the set point of the economizer control the lead unit economizer will operate instead of the compressor. If outdoor conditions are not acceptable for free cooling the compressor will automatically operate on compressor Stage 1 partial capacity instead of the economizer.

2nd cooling set point is 4F (default setting, user selectable 2-6F) warmer than Stage 1. On a call for 2nd stage cooling the lead unit Y2 cooling output turns on, at which time the lead unit compressor will operate on compressor Stage 2 full capacity. If the compressor is already operating on Stage 1 partial capacity because outside free cooling range the compressor will switch to compressor Stage 2 full capacity.

3rd cooling set point is 2F (default setting, user selectable 2-3F) warmer than Stage 2. On a call for 3rd Stage cooling the blower of the lag unit will come on immediately (if not already on – See Blower Operation), and the Stage 3 LED will blink for 10-seconds before going solid. The lag unit economizer will operate if the outdoor temperature and humidity conditions are below the set point of the economizer control. If outdoor conditions are not acceptable for free cooling the compressor will automatically operate on compressor Stage 1 partial capacity instead of the economizer.

4th cooling set point is 2F (default setting, user selectable 2-3F) warmer than Stage 3. On a call for 4th Stage cooling the lag unit Y2 cooling output turns on, at which time the lag unit compressor will operate on compressor Stage 2 full capacity. If the compressor is already operating on Stage 1 partial capacity because outside free cooling range the compressor will switch to compressor Stage 2 full capacity.

5. 2-Stage Compressor Units with Newer ECONWMT Economizers (See Note A)

1st stage cooling set point is the setting (SP) input into the controller. Factory default is 77F (25C). On a call for cooling the blower of the lead unit will come on immediately (if not already on – See Blower Operation), and the Stage 1 LED will blink for 10-seconds before going solid, at which time the lead unit Y1 cooling output turns on. If the outdoor temperature and humidity conditions are below the set point of the economizer control the lead unit economizer will operate instead of the compressor. If outdoor conditions are not acceptable for free cooling the compressor will automatically operate on compressor Stage 1 partial capacity instead of the economizer.

2nd cooling set point is 4F (default setting, user selectable 2-6F) warmer than Stage 1. On a call for 2nd stage cooling the lead unit Y2 cooling output turns on. If the outdoor temperature and humidity conditions are below the set point of the economizer control the lead unit economizer will continue to operate, and the compressor will operate on compressor Stage 1 partial capacity. If the compressor is already operating on Stage 1 partial capacity because outside free cooling range the compressor will switch to compressor Stage 2 full capacity.

3rd cooling set point is 2F (default setting, user selectable 2-3F) warmer than Stage 2. On a call for 3rd Stage cooling the blower of the lag unit will come on immediately (if not already on – See Blower Operation), and the Stage 3 LED will blink for 10-seconds before going solid, at which time the lag unit Y1 cooling output turns on. The lag unit economizer will operate if the outdoor temperature and humidity conditions are below the set point of the economizer control. If outdoor conditions are not acceptable for free cooling the compressor will automatically operate on compressor Stage 1 partial capacity instead of the economizer.

4th cooling set point is 2F (default setting, user selectable 2-3F) warmer than Stage 3. On a call for 4th Stage cooling the lag unit Y2 cooling output turns on activating the compressor. If the outdoor temperature and humidity conditions are below the set point of the economizer control the lag unit economizer will continue to operate, and the compressor will operate on compressor Stage 2 full capacity. If the compressor is already operating on Stage 1 partial capacity because outside free cooling range the compressor will switch to compressor Stage 2 full capacity.

Note A: *Economizers in ECONWMT-Series are available with either "T" temperature only outdoor sensor or "E" enthalpy (temperature and humidity) outdoor sensor. The "T" versions will have a fixed (but selectable) outdoor temperature decision whereas on the "E" versions the outdoor temperature decision will float based on outdoor humidity and the selected Enthalpy curve in the economizer control module.*

HEATING SEQUENCE OF OPERATION

Note: *All heating sequences for air conditioners with electric heat or heat pumps will automatically operate in Alternating Lead/Lag/Lead/Lag sequence even if controller is set to Non-Alternating for cooling with or without economizers.*

1. Air Conditioners with Electric Heat

1st stage heating set point is the dead-band (db) below the 1st stage cooling set point (the SP entered into the program). The dead-band is adjustable from 2-40F, and factory default is 17F.

2nd stage heating set point will operate at same inter-stage differential as set for cooling mode.

2. Heat Pumps with Electric Heat

When the MC4000 controller is configured for heat pump installations the 2nd-stage (Y2) outputs for both units 1 and 2 are redefined and used to control the reversing valves, and which are energized in heating mode.

1st stage heating set point is the dead-band (db) below the 1st stage cooling set point (the SP entered into the program). The dead-band is adjustable from 2-40F, and factory default is 17F.

1st-stage heating consists of lead unit blower coming on (if not already on – See Blower Operation), and reversing valve being energized. The Stage 1 heating LED will blink for 10-seconds, at which time the compressor turns on.

2nd heating set point is 4F (default setting, user selectable 2-6F) cooler than Stage 1. On a call for 2nd Stage heating the blower of the lag unit is turned on (if not already on – See Blower Operation), the reversing valve is energized, and the Stage 2 LED will blink for 10-seconds before going solid, at which time the compressor will start.

3rd-stage heating will be the electric heater, if so equipped, in the lead unit. Stage 3 heating LED comes on solid with no blinking.

4th-stage heating will be the electric heater, if so equipped, in the lag unit. Stage 4 heating LED comes on solid with no blinking.

SPECIFICATIONS FOR OPTIONAL REMOTE COMMUNICATION BOARD

CB4000 COMMUNICATION BOARD

Note: *If this communication board was not originally factory installed it can be field-installed at anytime. Bard part number is CB4000. Either the –A or –B alarm board is required for CB4000 to operate properly. It allows remote access via Ethernet, depending upon level of authority assigned, to all functions of the controller system the same as it one was in the building where the controller system is physically installed.*

Required Input Connections to the CB4000 (these are all internal connections from either the alarm board or main controller board):

1. Fire/smoke connection from MC4000 main controller board.
2. Refrigerant lockout inputs.
3. If economizers are used an additional 24V signal wire is required from each air conditioner to the controller system.
4. Communication cable from CB4000 plugs into phone jack connection on main MC4000 controller board.

OPERATING SYSTEM

No special software is required to access the system. The CB4000 has a default address, simply follow these instructions:

TO ACCESS THE SYSTEM

1. Connect CAT 5 or CAT 6 Ethernet cable from computer to Ethernet port on the CB4000.
2. Change your computer's IP address as shown below to gain initial access to the CB4000.

NOTE 1: Record your computer's current IP settings **BEFORE** making any changes. You will need to reset back to these original settings once you've assigned an IP address to the CB4000.

For XP or Windows 2000:

1. Open Control Panel, double click Network Connections.
2. Double click Local Area Connection on the General tab and select Properties.
3. Using the General tab, scroll to Internet Protocol (TCP/IP).
4. Highlight Internet Protocol (TCP/IP) and select Properties.
5. Change the addresses as follows:

IP address:	192.168.1.50
Subnet mask:	255.255.255.0
Default gateway:	192.168.1.1
Preferred DNS server:	192.168.1.10
Alternate DNS server:	192.168.1.11

6. Click OK and close all windows.
7. Start your browser, enter the CB4000's default IP address **192.168.1.67** and hit Enter.
8. The MC4000 log-in page should appear.

For Vista or Windows 7:

1. Open Control Panel, click Network & Internet.
2. Click Network & Sharing Center.
3. Click Local Area Network link.
4. Click Properties.
5. Highlight Internet Protocol Version 4 (TCP/IPV4) and select Properties.
6. Change the addresses as follows:

IP address:	192.168.1.50
Subnet mask:	255.255.255.0
Default gateway:	192.168.1.1
Preferred DNS server:	192.168.1.10
Alternate DNS server:	192.168.1.11

7. Click OK and close all windows.
8. Start your browser, enter the CB4000's default IP address **192.168.1.67** and hit Enter.
9. The MC4000 log-in page should appear.

LOG IN PAGE

1. Type in "Admin" for the user name and "Bard" for the password. These are case sensitive. Hit "Log In".
2. Click the "System Setup" button.

SYSTEM SETUP PAGE

Note: *If the remote user is on a different subnet than the CB4000 it is recommended that Static IP Addressing be used rather than DHCP.*

IF YOUR NETWORK USES STATIC IP ADDRESSING

1. Enter the correct address information provided by your IT department and click the "Save Config" button.
2. The assumption is that the new IP address has already been configured into the network to get through any firewall(s).
3. Disconnect the Ethernet cable from the computer and plug into your router.
4. Change your computer system's IP address back to their previous settings from **Note 1.**
5. Type the new IP address into the browser and make any changes to the MC4000 system before logging out.

IF YOUR NETWORK USES DHCP

1. Check the "Enable DHCP" box.
2. Click "Save Config" box (it will take several seconds before you receive a message that you are now offline. At this point the unit is now running in DHCP mode).
3. Change your computer system's IP address back to their previous settings from **Note 1.**
4. Type **CB4000** in the browser's URL address bar to access the CB4000.

NOTE 2: If you need to get back to the CB4000 default IP setting simply hold the reset button next to the phone jack for 5+ seconds, then release.

USER PAGE

1. The designated Admin person can assign up to 9 additional users and set-up as Admin, Write or Read authority.
2. User Name and password must be assigned, each must be at least 3 characters long, and are case sensitive.
3. Only "Admin" can add, change or delete users and has access to all controller pages.
4. "Write" can make changes to the controller settings and operating characteristics, and has access to only Log In, System Status, Setpoints, and Log Out pages.
5. "Read" can only view Status and Setpoints pages and cannot make any changes.

SYSTEM STATUS PAGE

1. This page shows the overall HVAC status of:
   a. Active cooling or heating stages or dehumidification mode (requires humidity sensor)
   b. Active controller outputs (blower, cooling Stage 1 or 2, heating) to each air conditioner
   c. Which unit is the Lead unit
   d. Power loss or refrigerant lock-out for each air conditioner
   e. If economizers are used if on or off (Note: older style EIFM economizers require a simple relay kit for this feature to work, Bard Part Number 8620-221)
2. General status of:
   a. Dehumidification Active or not
   b. Backup Generator Active or not (if tied to generator run controls to inhibit lag unit operation during generator run)
   c. Alarm board connected or not
   d. Controller system Locked or Unlocked
   e. Comfort mode Active or not
3. Temperatures:
   a. Average temperature (if more than ones sensor used, if not will read same as Local sensor)
   b. Local sensor at controller
   c. Remote 1 or Remote 2 if connected
4. General Alarm Status:
   a. Fire/Smoke, Clear or Alarm
   b. Low Temp, Clear or Alarm
   c. High Temp #1, Clear or Alarm
   d. High Temp #2, Clear or Alarm
   e. Controller Failure, Clear or Alarm

SETPOINTS PAGE (Note: "Read" level authority can view this screen but cannot make any changes. "Admin" and "Write" authority can make changes)

1. General Setpoints
   a. On initial installation and start-up all selectable characteristics are set to factory default settings.
   b. Each of these points has a drop-down menu for ease of use.
2. Alarm Board Setpoints
   a. Low temperature alarm setpoint
   b. High temperature alarm #1 setpoint
   c. High temperature alarm #2 setpoint
3. System Overrides
   a. System 1 Cooling Override
   b. System 1 Heating Override
   c. System 2 Cooling Override
   d. System 2 Heating Override
   e. Turn Power On to the System (Note: Cannot remotely turn the controller system Off)
   f. Lock/Unlock Controller
   g. Advance Lead to Lag Unit
   h. Comfort Mode
   i. Restore System Defaults
   j. Reset Controller. There are built-in routines to prevent the controller system from getting "locked up", but this also allows a manual remote reset as a backup before having a service call to the site.

LOG OUT BUTTON

1. Clicking this button will automatically log you off the controller remote access.
2. To log back in will require entering assigned IP address into your browser and entering valid User Name and Password.

CONNECT TO NETWORK

1. After initial set-up using laptop computer, disconnect computer cable from the Ethernet port and connect the CAT 5 or CAT 6 network cable.
2. Remote access is now available using the assigned IP address and valid User Name and Password (case sensitive).

CB4000 COMMUNICATION BOARD

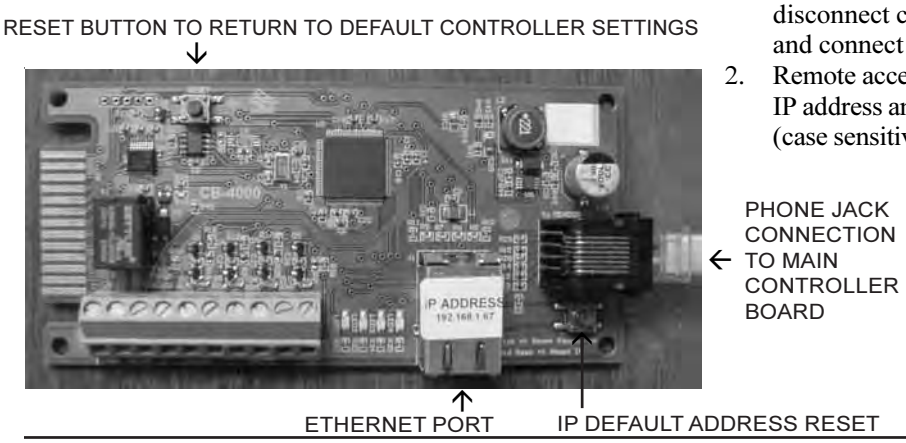

CONTROLLER WIRING

The MC4000 can be used for controlling two (2) air conditioners with or without economizers. It can also be configured for two (2) heat pumps without economizers. Units with economizers will connect differently than units without economizers; therefore, it is important to use the correct connection diagram.

There are older style EIFM economizers and newer style ECONWMT economizers that the MC4000 controller system can work with, and also an option for a remote Ethernet communication board. Therefore, it is important to select the correct low voltage hook-up diagram. See Table 1 — Hook-Up Diagram Selection on Page 17.

SECURITY (LOCKING) FEATURE

The MC4000 controller can be locked such that unauthorized persons cannot make any changes to temperature set points or any other selectable parameters of the controller system.

The ON/OFF and Comfort buttons remain fully active for their normal intent. The Advance/Change/Save button remains active for the Advance feature only, which allows the position of the lead and lag air conditioners to be swapped (reversed). The Program button remains partially active - allowing the review of temperature sensor(s) actual reading of temperature, and the current settings/choices that have been chosen. However, no changes can be made when the controller is locked, and if the change button is pressed when in the Program mode, the display will come up showing "Locd" instead of flashing the selectable choices for that parameter. The default (DEF) reset capability is also disabled when the controller is in locked mode.

Locking and Unlocking the MC4000 Controller:

1. Locking the controller requires using 3 buttons while the controller is in the normal operating (run) mode.

2. Press and hold the Advance/Change/Save button and the Up and Down arrow buttons simultaneously for 20 seconds until the display shows "Locd".

3. To unlock the controller, press the Change, Up and Down arrow buttons simultaneously for 20 seconds until the display reads "uLoc".

GENERATOR RUN FEATURE

If desired, the MC4000 controller can be signaled from a standby generator system to lockout (disable operation) of the lag air conditioning system. This is sometimes mandated if the generator size is not sufficient to handle the building load (amperage) and that of both air conditioning systems.

A normally closed (NC) dry contact as part of generator controls is required. These contacts must open when the generator is started, and such action will signal the MC4000 controller to this condition and disable lag air conditioner run function.

A wire jumper is factory-installed across the G1 and G2 terminals or main controller board. To utilize the generator run feature, remove the jumper from G1 and G2, and connect the generator normally closed (NC) contacts that will open-on-run generator condition to the G1 and G2 terminals.

BACKUP DC POWER CONNECTION

There are input connections available for -24VDC or -48VDC (-20 to -56V) backup power connection. Making this connection will maintain microprocessor operation, front panel display, LED signaling, and alarm relay operation during periods of commercial power outages and when no standby generator is available. This circuit is protected by a replaceable .5A (500mA) 250V fuse.

IMPORTANT: *The shelter DC battery power must be connected to the controller and wired as shown in controller wiring diagrams.*

The backup DC power connection is polarity sensitive. If polarity is reversed, the controller will not function on backup power, no display and no alarm functions will be evident.

TABLE 1
HOOK-UP DIAGRAM SELECTION TABLE — REFERENCE FIGURE 1 SHOWN

System Type	Model Series	No Economizer	MC4000-A or MC4000-B with Communication Board – No Economizer	Older EIFM Economizer — No Communication Board	Older EIFM Economizer with CB4000 Communication Board	Newer ECONWMT Economizer — No Communication Board	Newer ECONWMT Economizer with CB4000 Communication Board
A/C with 1-Stage Compressor	WA / WL W**A / W**L	1	3	5	7	9	11
A/C with 2-Stage Compressor	WA*S / WL*S	2	4	6	8	10	12
Heat Pump	WH / W**H SH / S**H	13	14	N/A	N/A	N/A	N/A

FIGURE 1
CONTROLLER CONNECTIONS
1-STAGE (WA/WL, W**A/W**L SERIES) AIR CONDITIONERS – NO ECONOMIZER

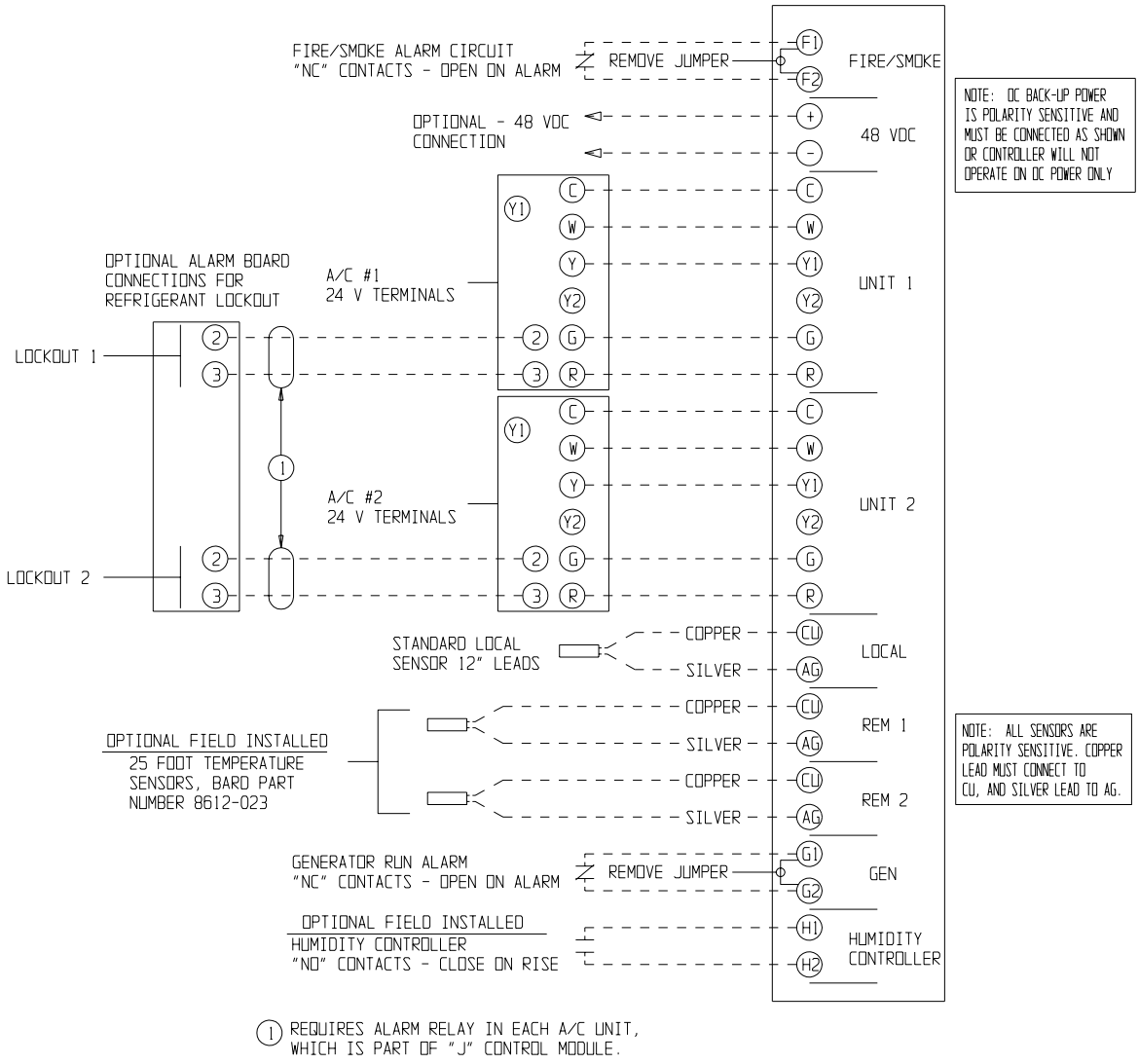

FIGURE 2
CONTROLLER CONNECTIONS
2-STAGE (WA*S/WL*S SERIES) AIR CONDITIONERS – NO ECONOMIZERS

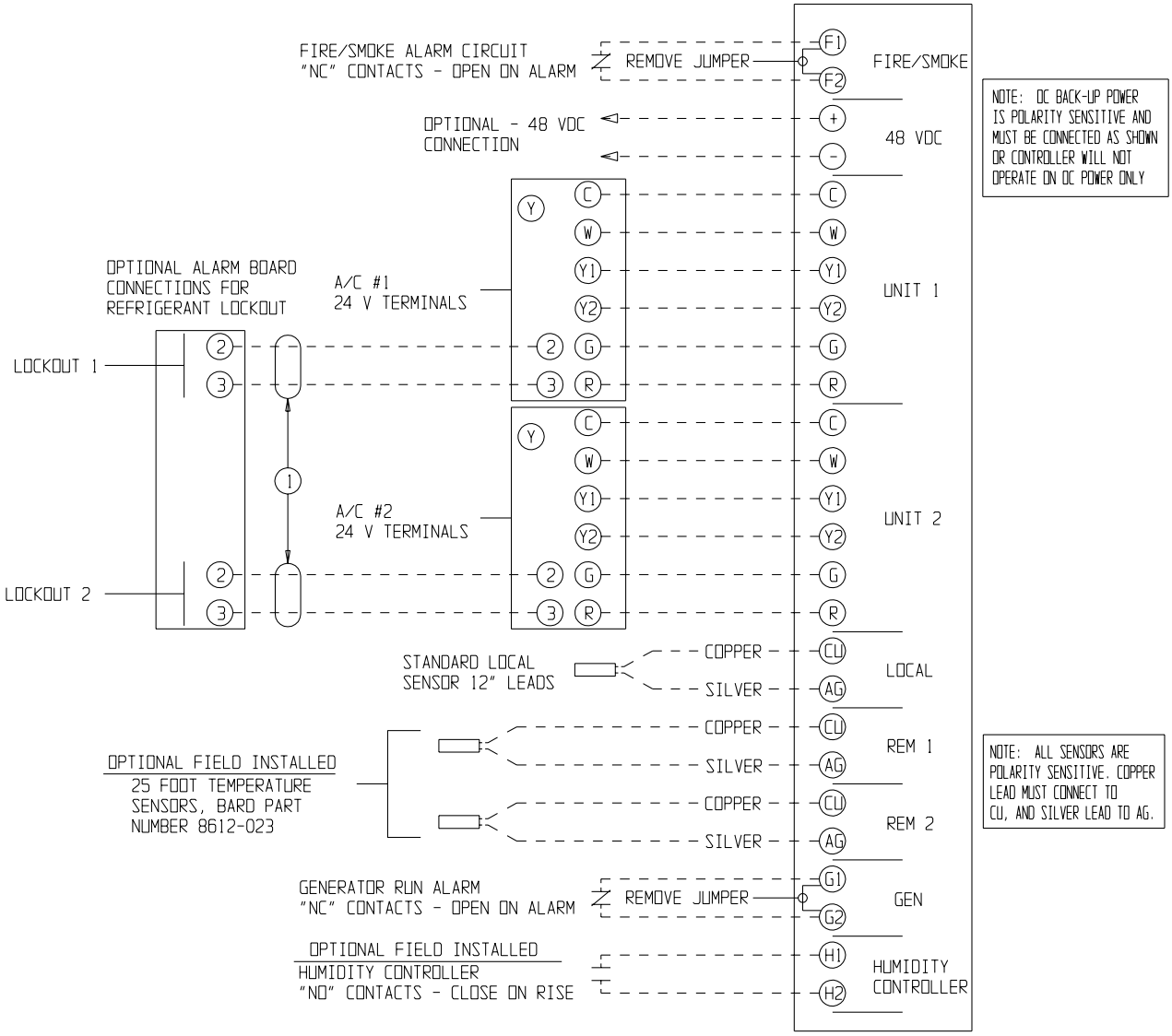

FIGURE 3
CONTROLLER CONNECTIONS
1-STAGE (WA/WL, W**A/W**L SERIES) AIR CONDITIONERS – NO ECONOMIZER
WITH ALARM BOARD & CB4000 COMMUNICATION BOARD

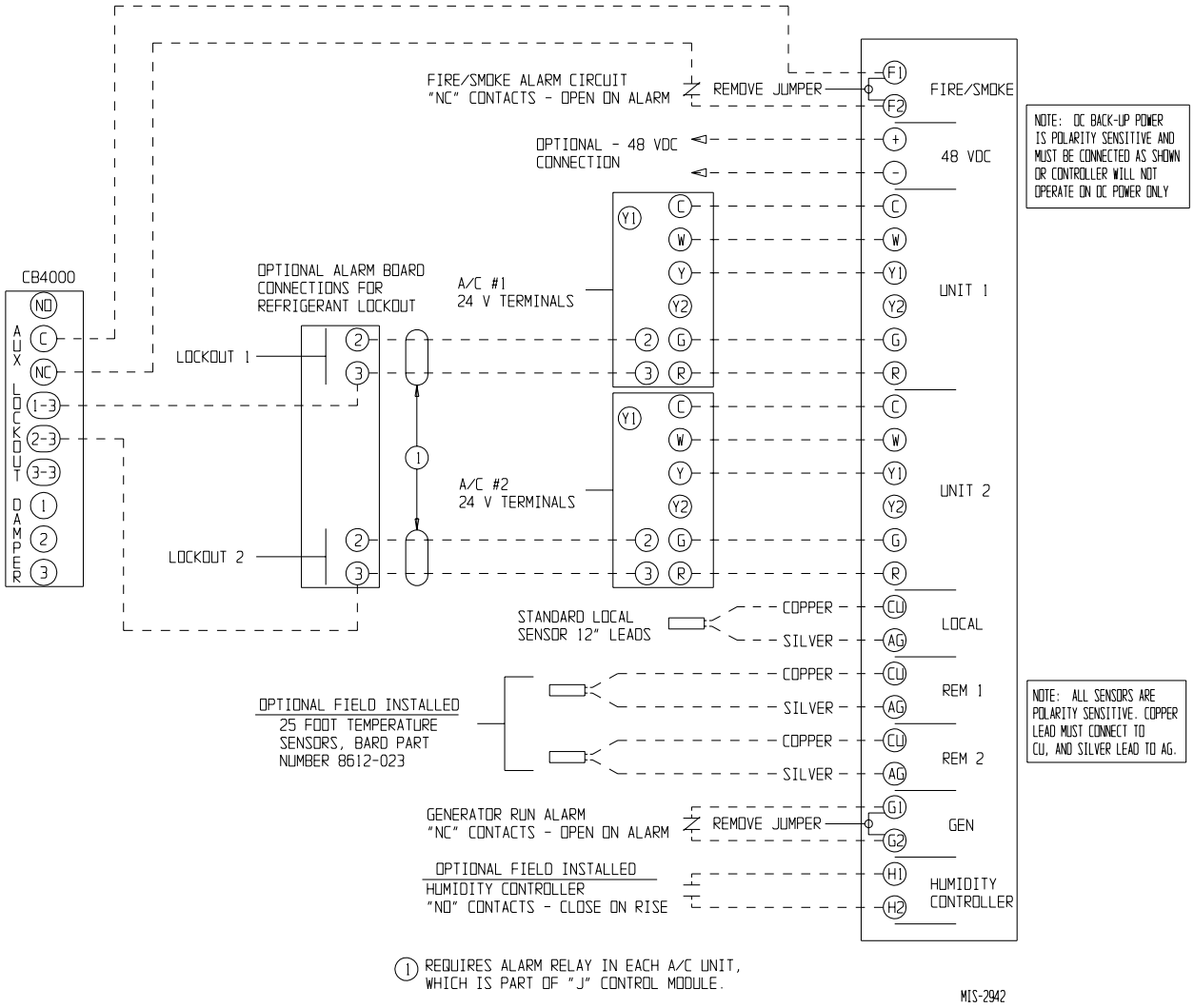

FIGURE 4
CONTROLLER CONNECTIONS
2-STAGE (WA*S/WL*S SERIES) AIR CONDITIONERS – NO ECONOMIZERS
WITH ALARM BOARD & CB4000 COMMUNICATION BOARD

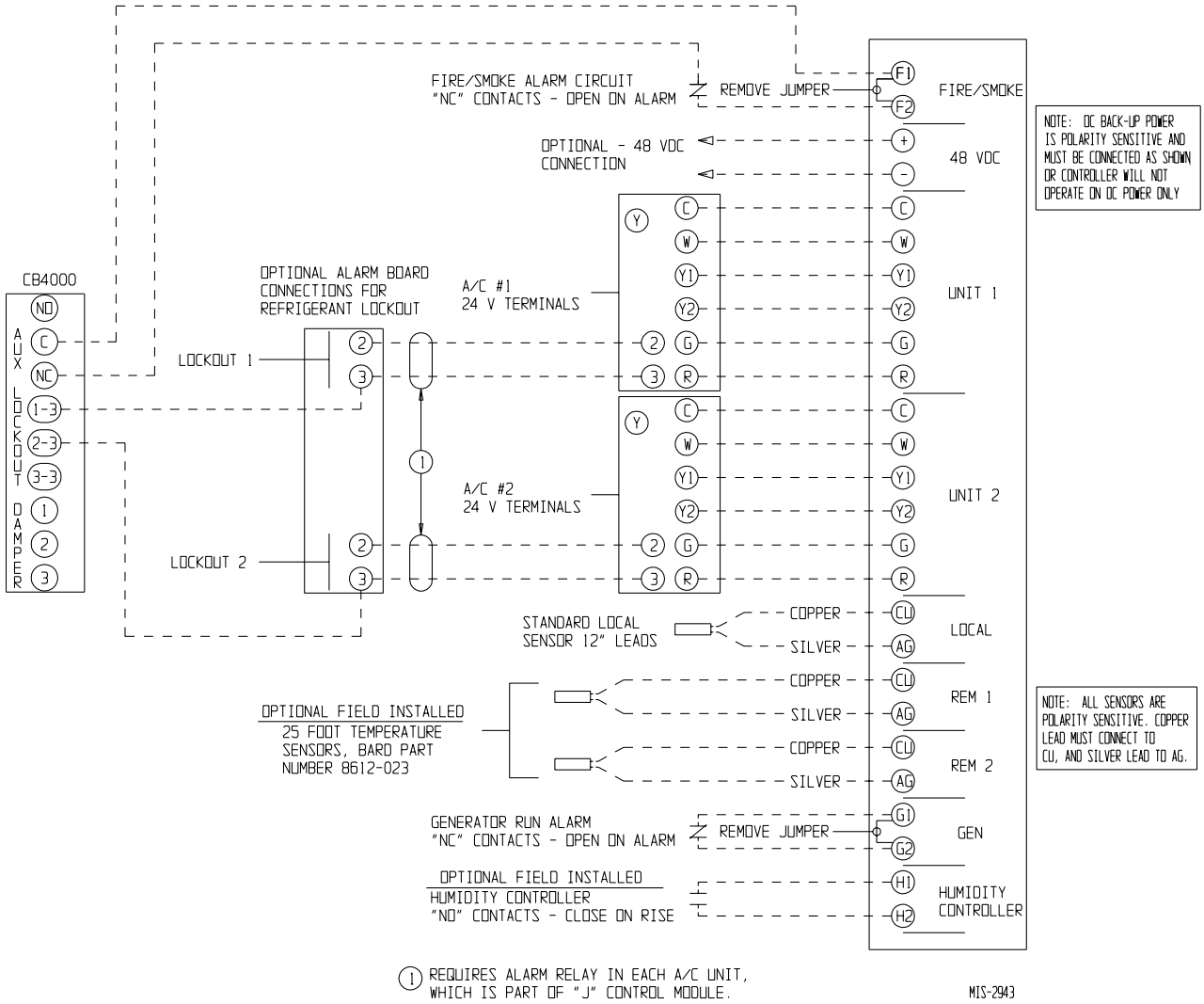

FIGURE 5
CONTROLLER CONNECTIONS
1-STAGE (WA/WL, W**A/W**L SERIES) AIR CONDITIONERS
WITH OLDER STYLE EIFM ECONOMIZERS

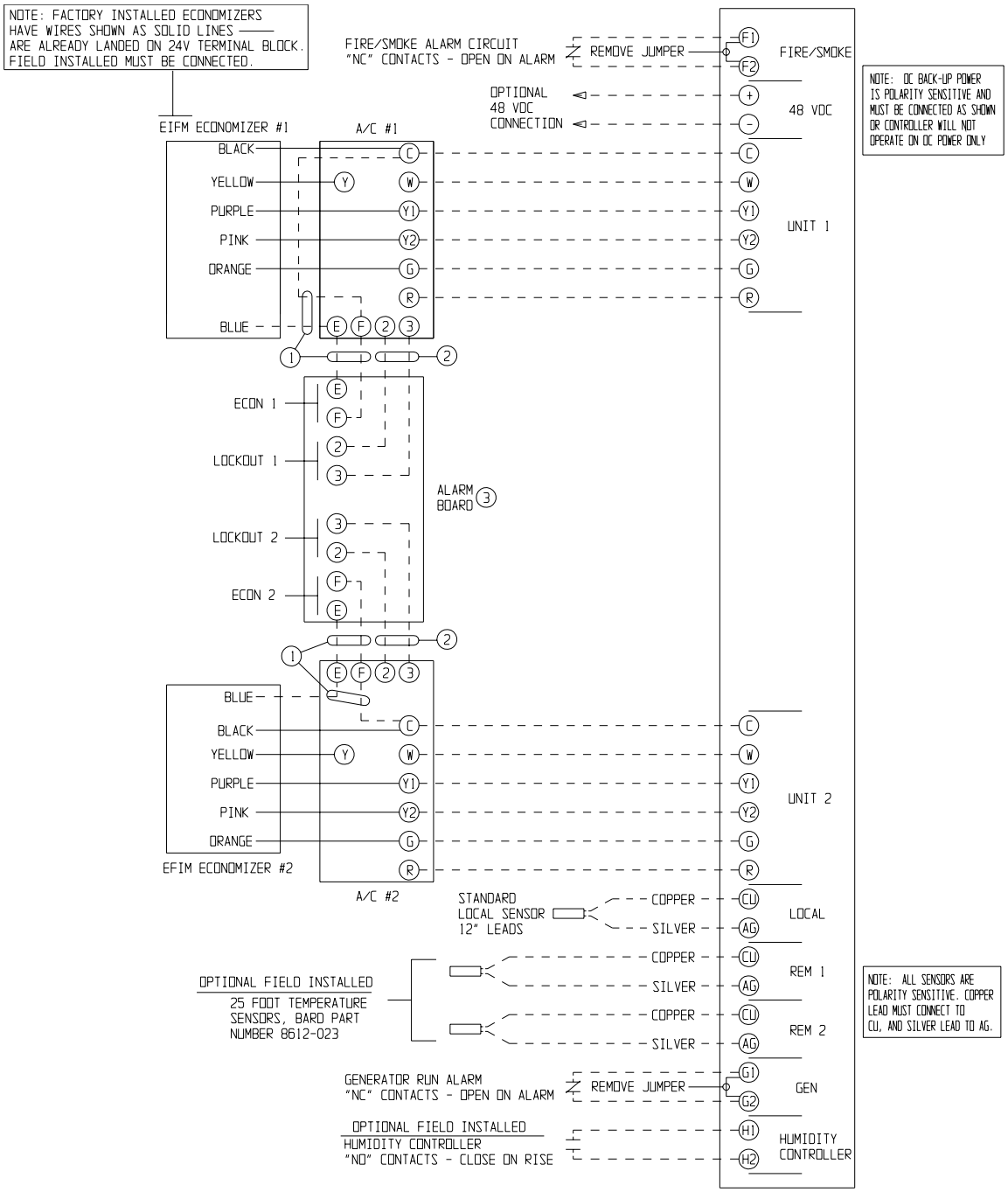

① CONNECT E AND F IF EMERGENCY VENTILATION ON HIGH TEMP ALARM CONDITION IS DESIRED.

② REFRIGERANT PRESSURE LOCKOUT ALARM - REQUIRES "J" CONTROL MODULE IN A/C UNITS.

③ THE "E" AND "F" CONNECTIONS FOR EMERGENCY VENTILATION ARE AVAILABLE ONLY ON THE -B ALARM BOARD.

MIS-2944 A

FIGURE 6
CONTROLLER CONNECTIONS
2-STAGE (WA*S/WL*S SERIES) AIR CONDITIONERS
WITH OLDER STYLE EIFM ECONOMIZERS

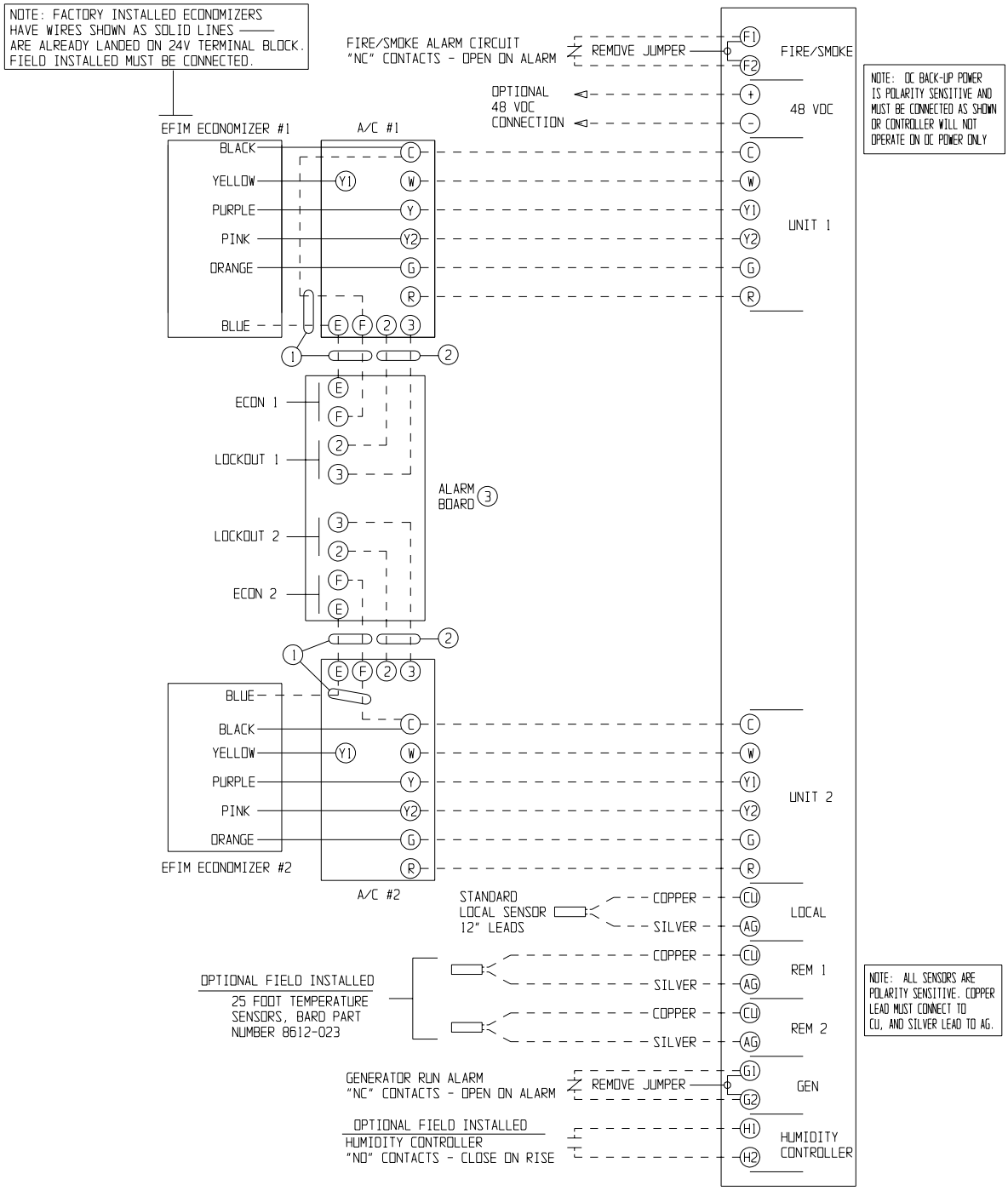

1. CONNECT E AND F IF EMERGENCY VENTILATION ON HIGH TEMP ALARM CONDITION IS DESIRED.
2. REFRIGERANT PRESSURE LOCKOUT ALARM - REQUIRES "J" CONTROL MODULE IN A/C UNITS.
3. THE "E" AND "F" CONNECTIONS FOR EMERGENCY VENTILATION ARE AVAILABLE ONLY ON THE -B ALARM BOARD.

FIGURE 7
CONTROLLER CONNECTIONS
1-STAGE (WA/WL, W**A/W**L SERIES) AIR CONDITIONERS
WITH OLDER STYLE EIFM ECONOMIZERS
AND WITH ALARM BOARD & CB4000 COMMUNICATION BOARD

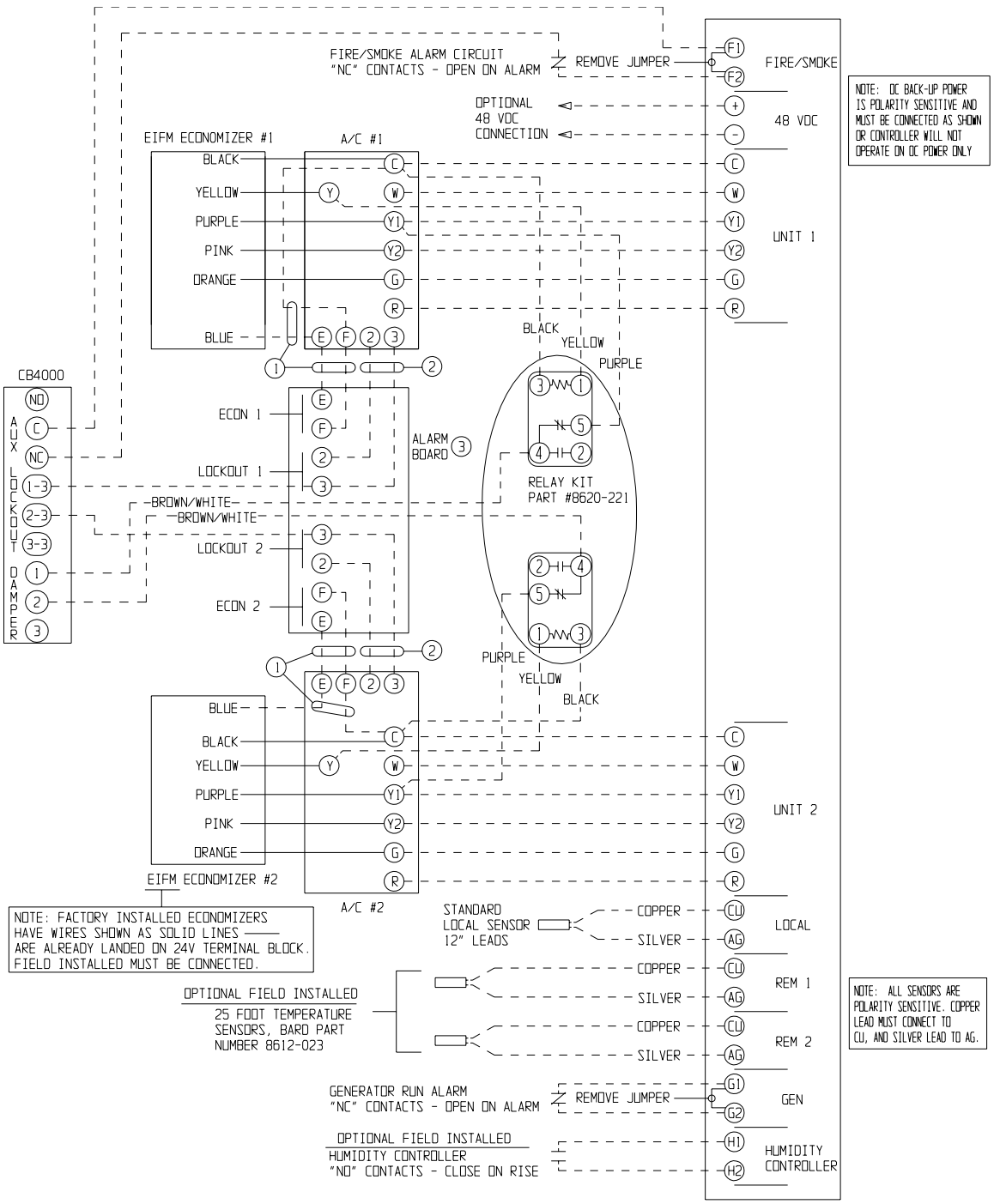

(1) CONNECT E AND F IF EMERGENCY VENTILATION ON HIGH TEMP ALARM CONDITION IS DESIRED.

(2) REFRIGERANT PRESSURE LOCKOUT ALARM - REQUIRES "J" CONTROL MODULE IN A/C UNITS.

(3) THE "E" AND "F" CONNECTIONS FOR EMERGENCY VENTILATION ARE AVAILABLE ONLY ON THE -B ALARM BOARD.

MIS-2946 A

FIGURE 8
CONTROLLER CONNECTIONS
2-STAGE (WA*S/WL*S SERIES) AIR CONDITIONERS
WITH OLDER STYLE EIFM ECONOMIZERS
AND WITH ALARM BOARD & CB4000 COMMUNICATION BOARD

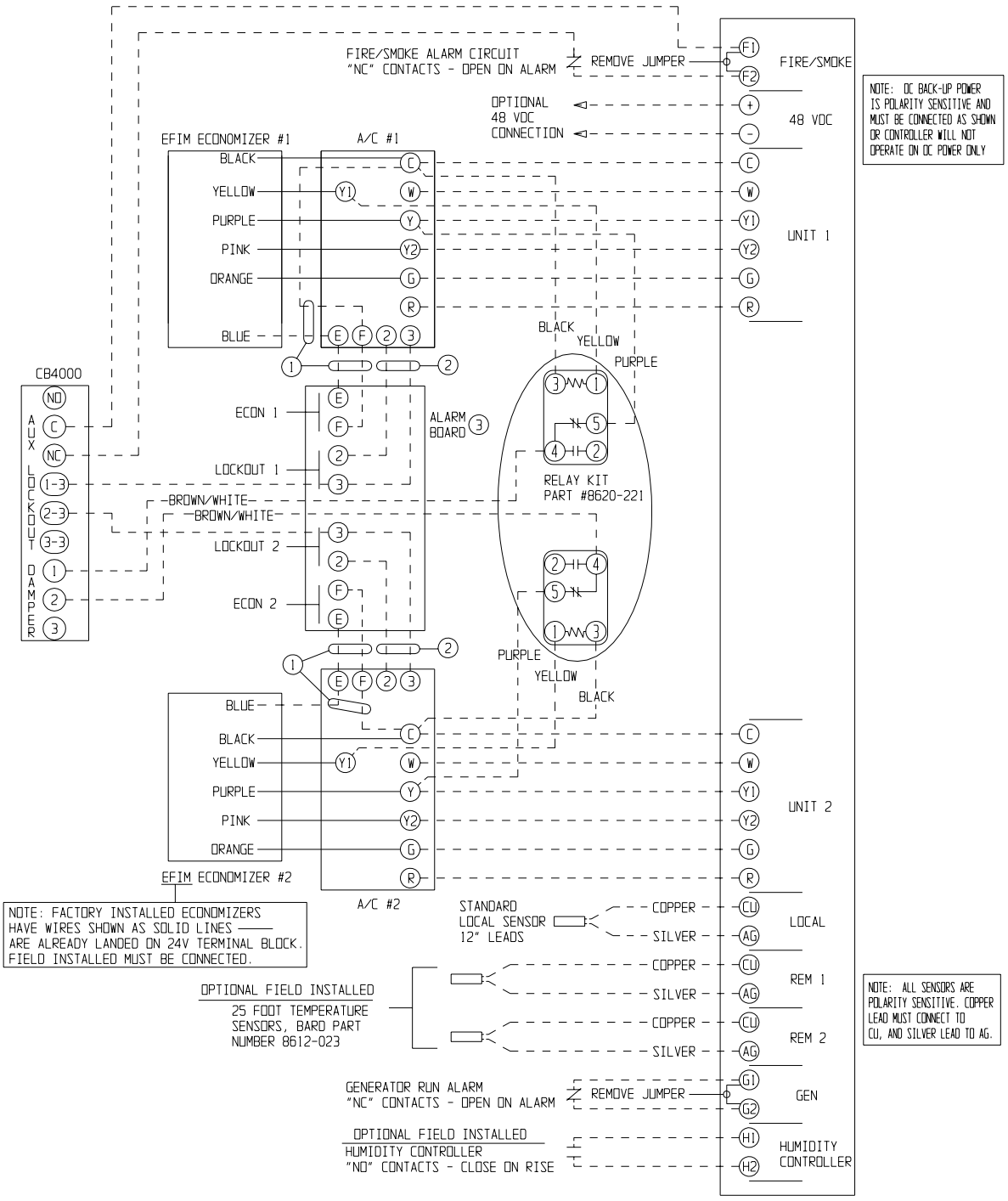

① CONNECT E AND F IF EMERGENCY VENTILATION ON HIGH TEMP ALARM CONDITION IS DESIRED.

② REFRIGERANT PRESSURE LOCKOUT ALARM - REQUIRES "J" CONTROL MODULE IN A/C UNITS.

③ THE "E" AND "F" CONNECTIONS FOR EMERGENCY VENTILATION ARE AVAILABLE ONLY ON THE -B ALARM BOARD.

MIS-2947 A

FIGURE 9
CONTROLLER CONNECTIONS
1-STAGE (WA/WL, W**A/W**L SERIES) AIR CONDITIONERS
WITH (ECONWMT) ECONOMIZERS

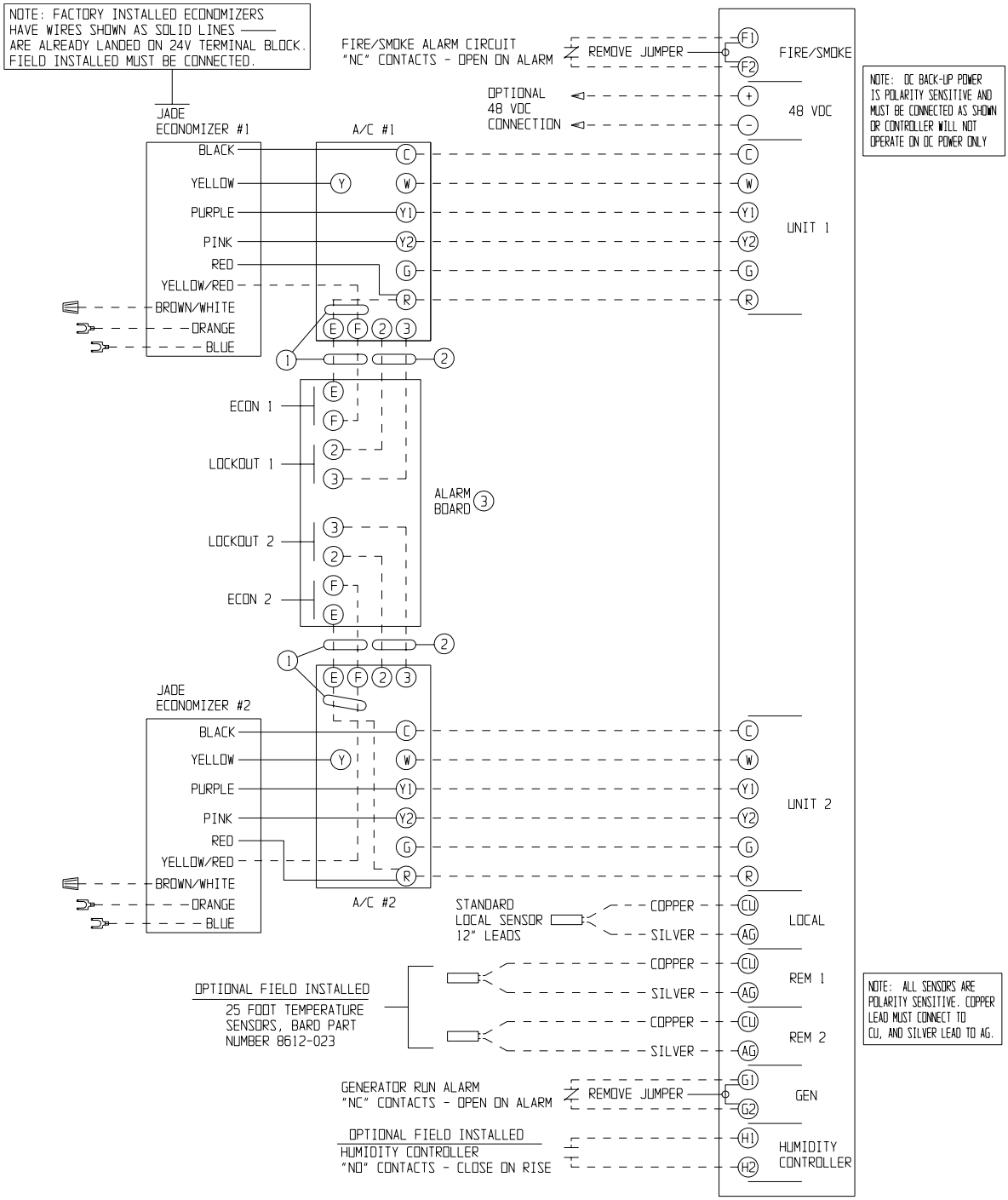

1. JADE CONTROLLER MUST BE SET TO 10V ON MINIMUM POSITION TO WORK AS EMERGENCY VENTILATION.
2. REFRIGERANT PRESSURE LOCKOUT ALARM - REQUIRES "J" CONTROL MODULE IN A/C UNITS.
3. THE "E" AND "F" CONNECTIONS FOR EMERGENCY VENTILATION ARE AVAILABLE ONLY ON THE -B ALARM BOARD.

MIS-2948 A

FIGURE 10
CONTROLLER CONNECTIONS
2-STAGE (WA*S/WL*S SERIES) AIR CONDITIONERS
WITH (ECONWMT) ECONOMIZERS

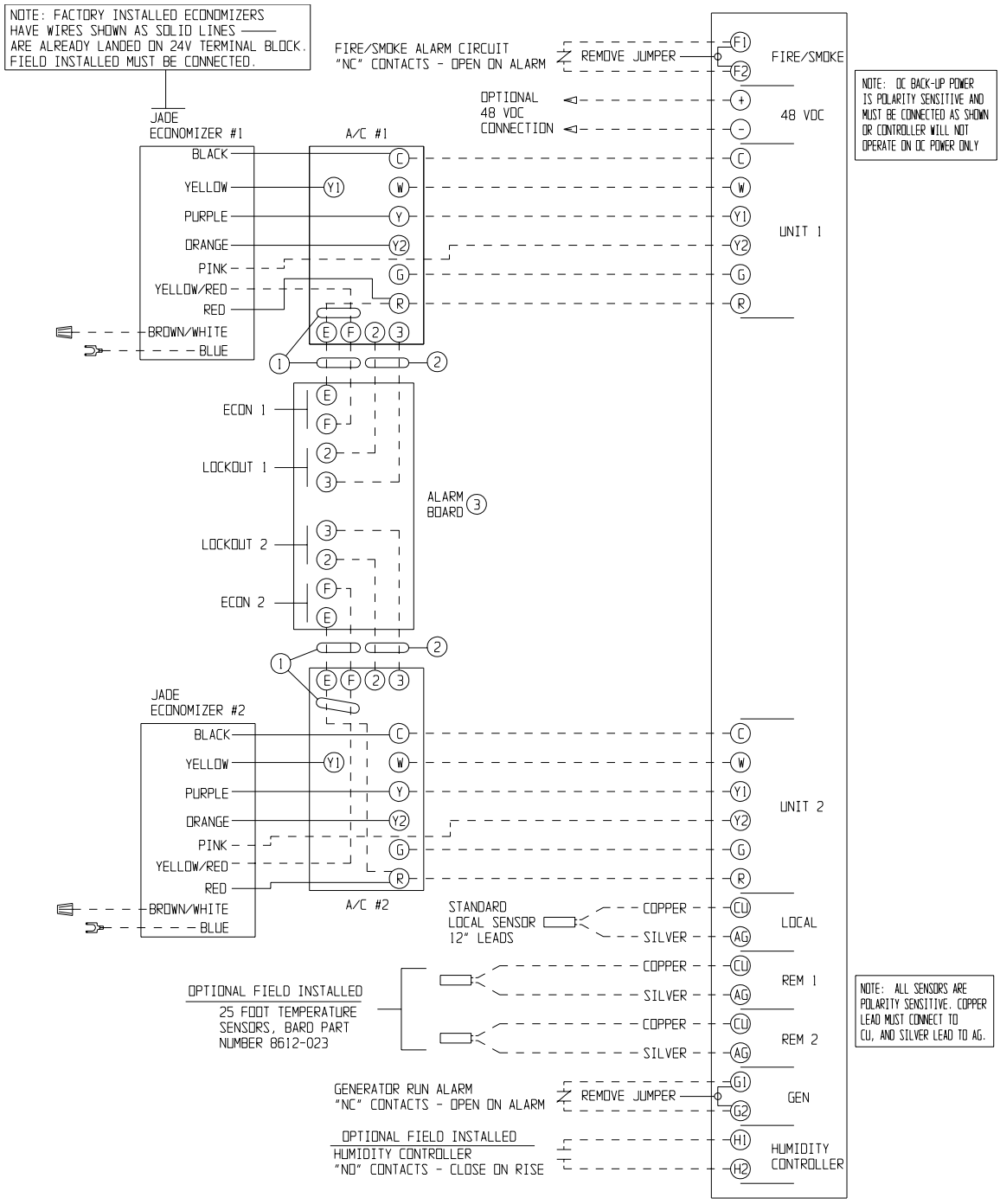

1. JADE CONTROLLER MUST BE SET TO 10V ON MINIMUM POSITION TO WORK AS EMERGENCY VENTILATION.
2. REFRIGERANT PRESSURE LOCKOUT ALARM - REQUIRES "J" CONTROL MODULE IN A/C UNITS.
3. THE "E" AND "F" CONNECTIONS FOR EMERGENCY VENTILATION ARE AVAILABLE ONLY ON THE -B ALARM BOARD.

MIS-2949 A

FIGURE 11
CONTROLLER CONNECTIONS
1-STAGE (WA/WL, W**A/W**L SERIES) AIR CONDITIONERS
WITH (ECONWMT) ECONOMIZERS
AND WITH ALARM BOARD & CB4000 COMMUNICATION BOARD

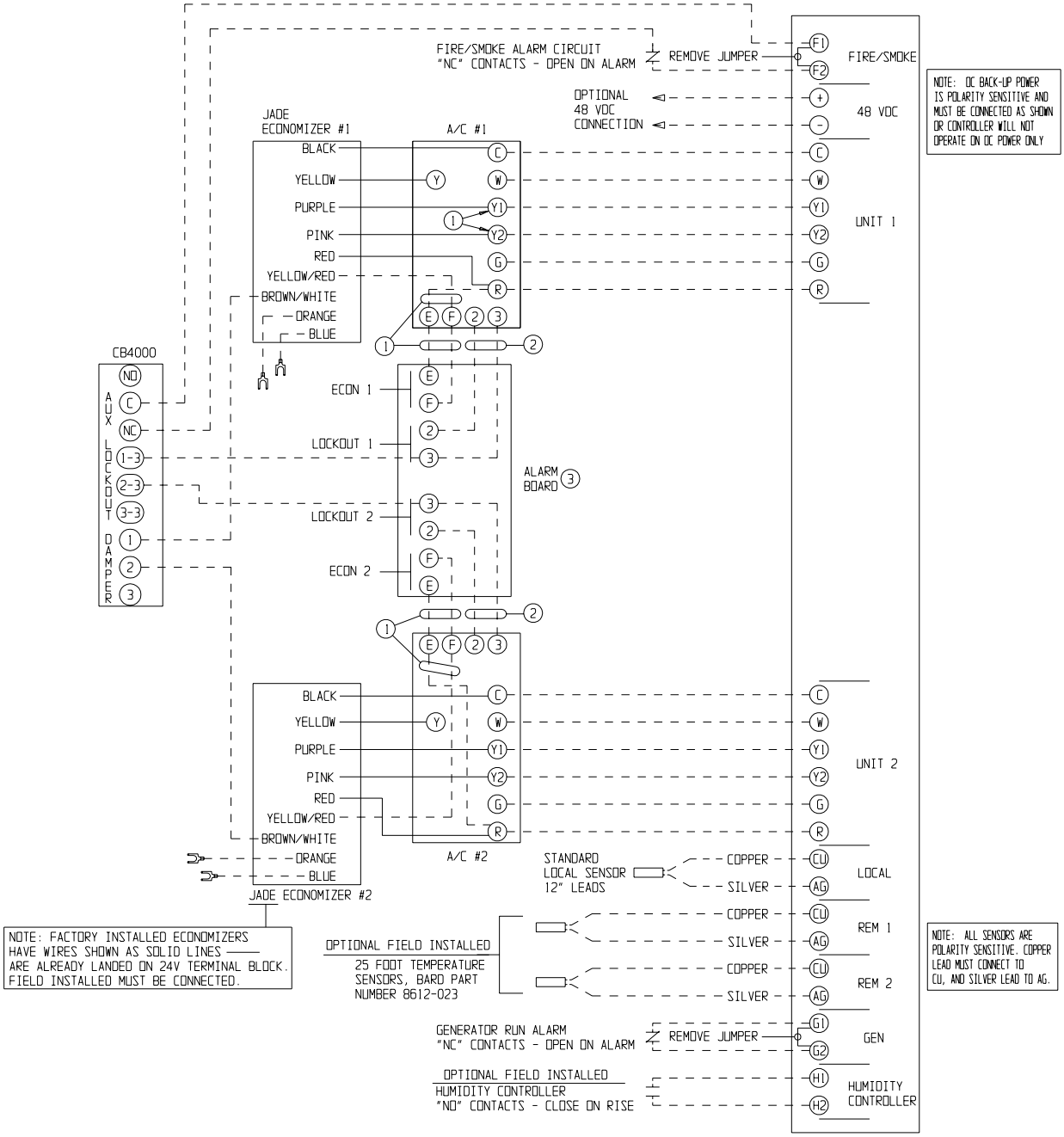

① JADE CONTROLLER MUST BE SET TO 10V ON MINIMUM POSITION TO WORK AS EMERGENCY VENTILATION.

② REFRIGERANT PRESSURE LOCKOUT ALARM - REQUIRES "J" CONTROL MODULE IN A/C UNITS.

③ THE "E" AND "F" CONNECTIONS FOR EMERGENCY VENTILATION ARE AVAILABLE ONLY ON THE -B ALARM BOARD.

MIS-2950 A

FIGURE 12
CONTROLLER CONNECTIONS
2-STAGE (WA*S/WL*S SERIES) AIR CONDITIONERS
WITH (ECONWMT) ECONOMIZERS
AND WITH ALARM BOARD & CB4000 COMMUNICATION BOARD

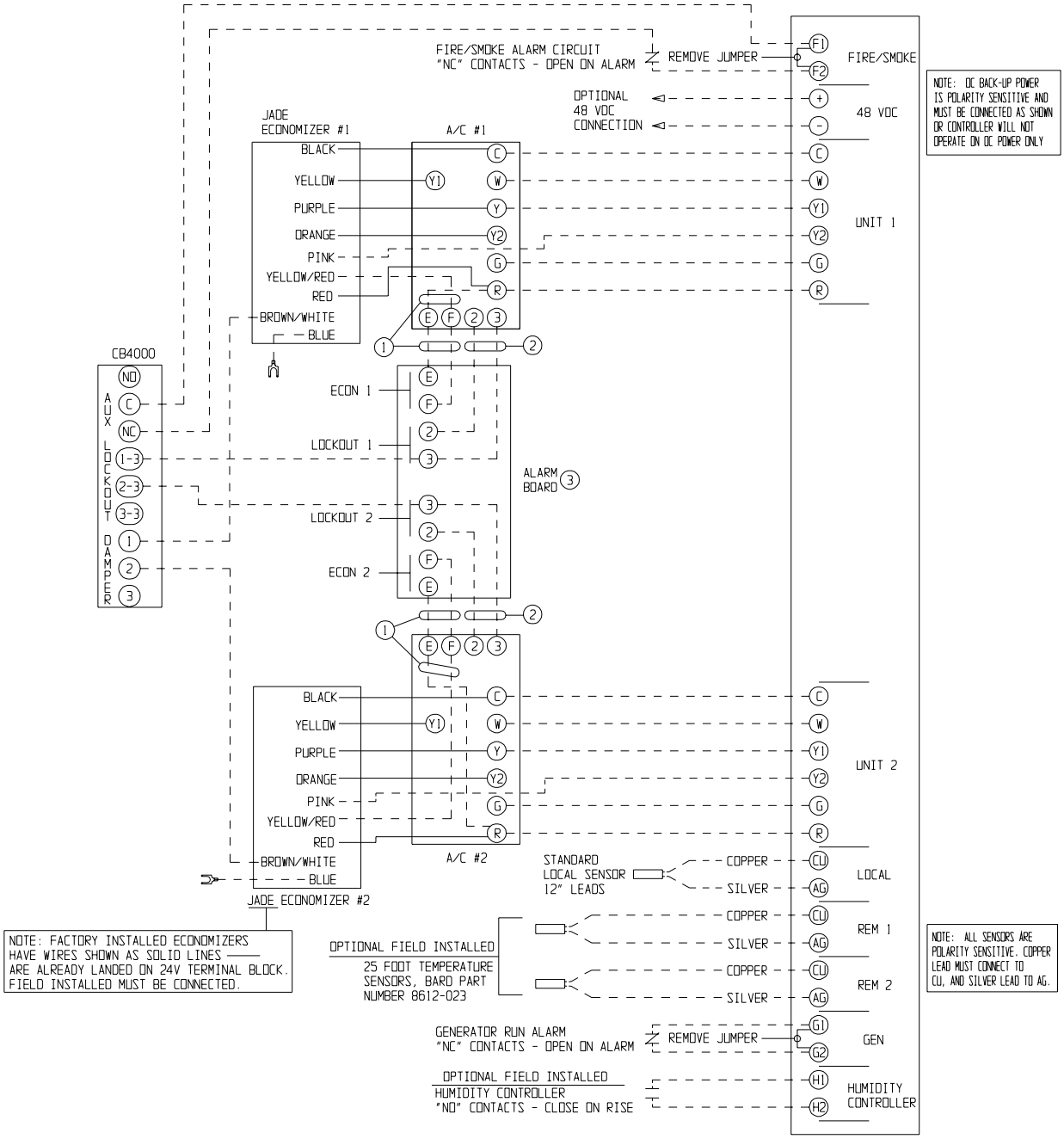

1. JADE CONTROLLER MUST BE SET TO 10V ON MINIMUM POSITION TO WORK AS EMERGENCY VENTILATION.
2. REFRIGERANT PRESSURE LOCKOUT ALARM - REQUIRES "J" CONTROL MODULE IN A/C UNITS.
3. THE "E" AND "F" CONNECTIONS FOR EMERGENCY VENTILATION ARE AVAILABLE ONLY ON THE -B ALARM BOARD.

MIS-2951 A

FIGURE 13
CONTROLLER CONNECTIONS
HEAT PUMPS – NO ECONOMIZER

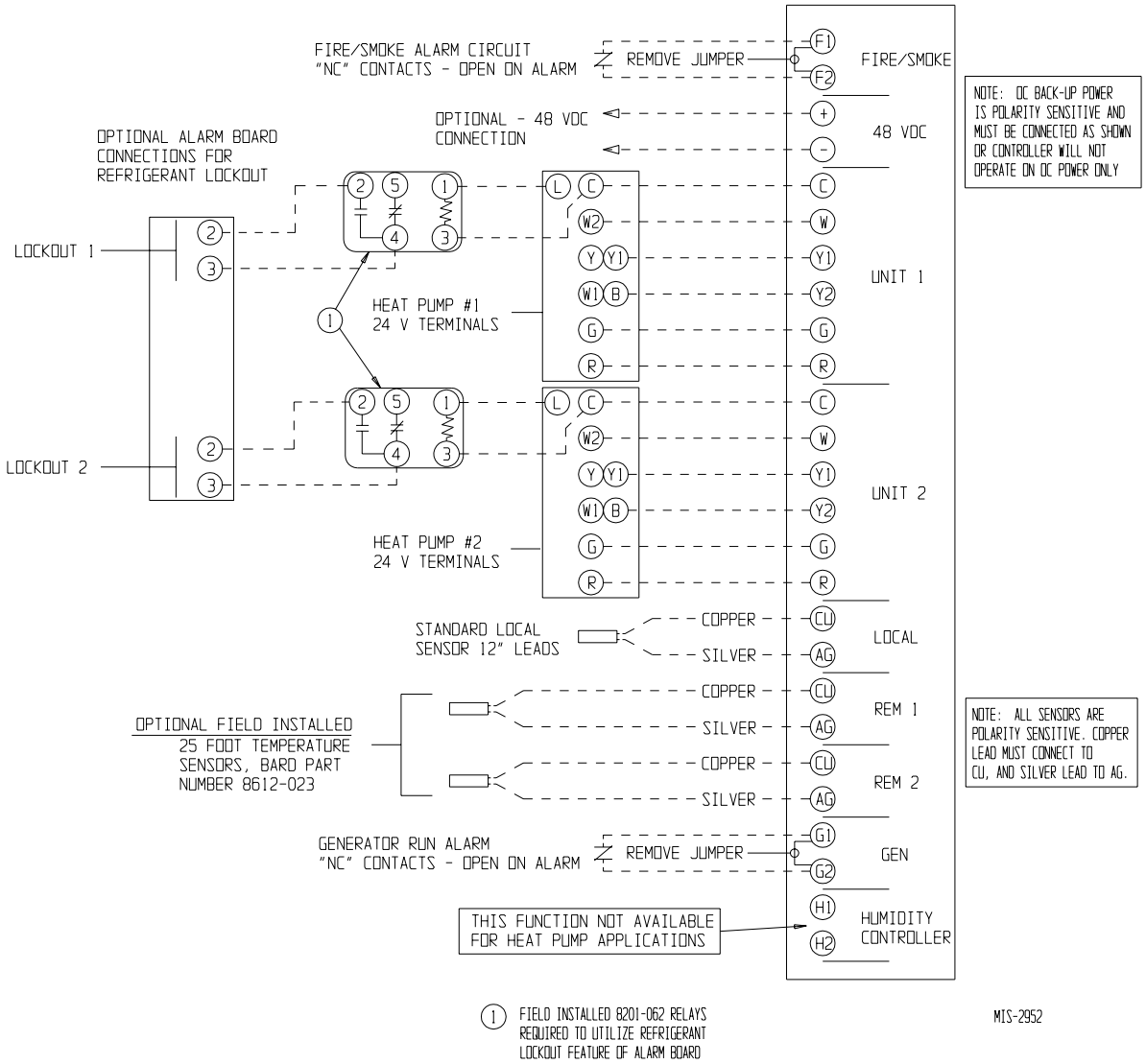

FIGURE 14
CONTROLLER CONNECTIONS
HEAT PUMPS – NO ECONOMIZER
WITH OPTIONAL ALARM BOARD & CB4000 COMMUNICATION BOARD

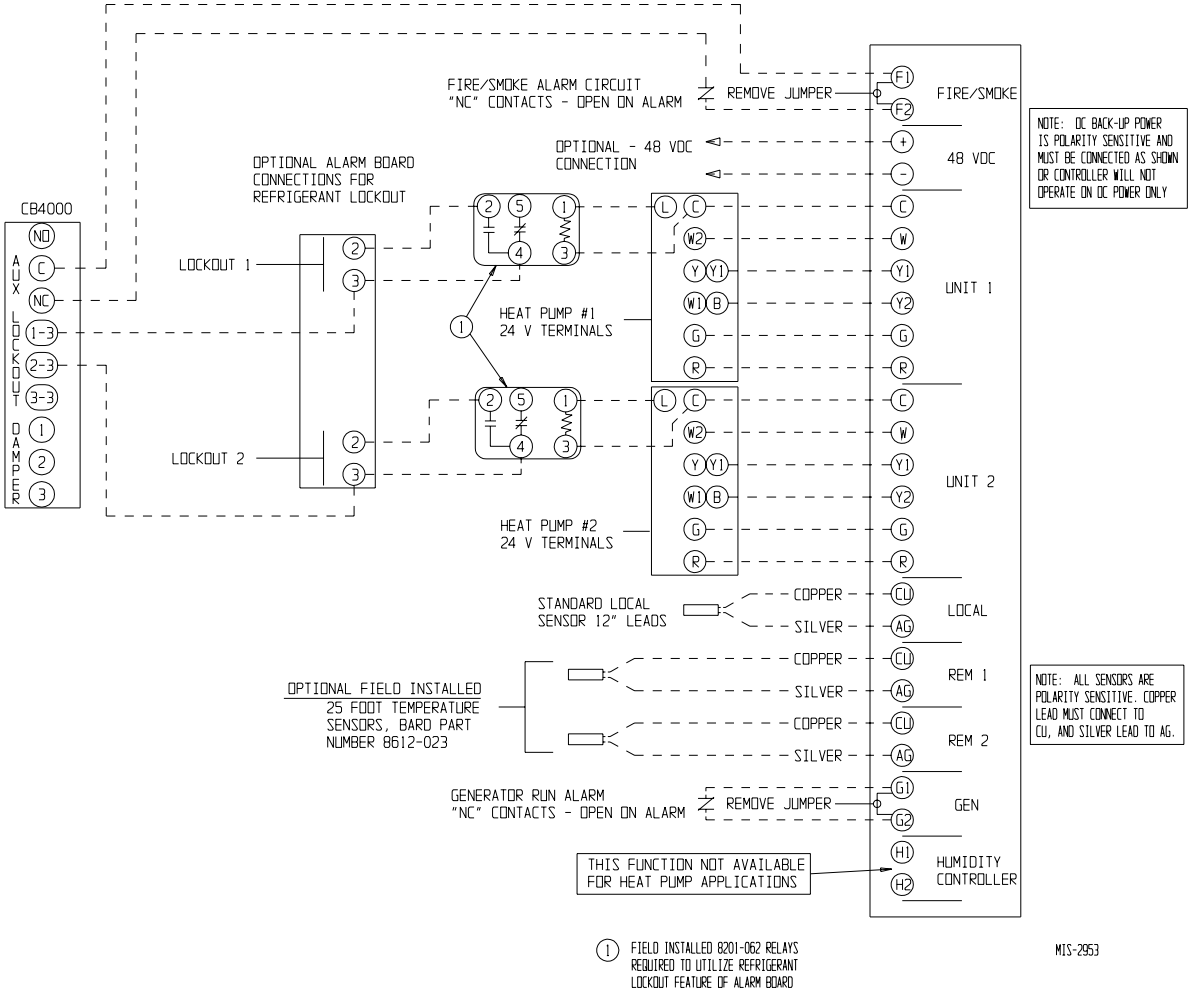

ALARM WIRING

Alarm relays can be wired for NO (close on alarm) or NC (open on alarm) strategy.

Alarm relays can be used individually if there are enough available building alarm points, or can be arranged into smaller groups or even a single group so that all alarm capabilities can be utilized.

When multiple alarms are grouped together and issued as a single alarm, there will no off-site indication of which specific problem may have occurred, only that one of the alarms in the group has been triggered. The individual alarm problem will be shown on the LED display on the face of the controller.

Note: All alarm and output relays are Form C (SPDT) dry contacts rated 1A @ 24 VAC.

Note: All alarm relay outputs have 10-second delay in acutally issuing to protect against nuisance alarm signals.

The Power Loss 1, Power Loss 2 and controller alarm relays are all "reverse actuated", which means they are continuously energized (the NO contact is closed) and switched to NC position upon alarm condition. Therefore, it is important to closely follow the alarm board connection diagrams that follow.

Any alarm feature that is not desired can simply be ignored (not connected).

NOTE: The alarm LED display board is shipped uninstalled to protect it from possible damage during installation of the wiring to main controller board and/or the alarm board. It is polarity sensitive and is keyed so it can only be installed in correct position.

NOTE: The LED display board can be replaced if needed independently of the alarm board. Bard part number is 8612-022.

ALARM LED DISPLAY BOARD

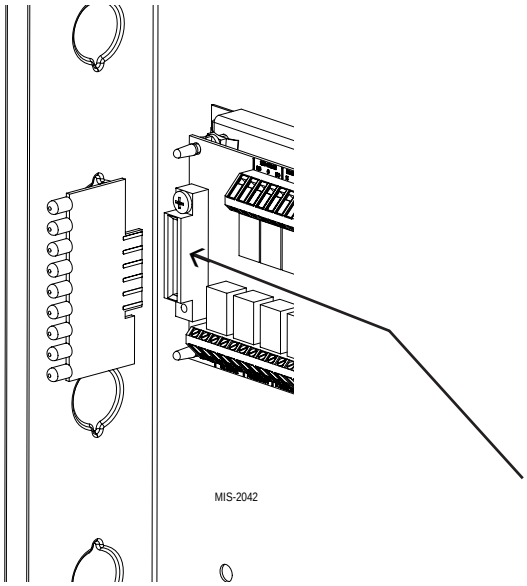

2ND STAGE COOLING ALARM

This alarm output is available for use if desired. It is important to note that in some installations, due to A/C system sizing and internal heat load, that the secondary (lag) air conditioning unit may be called upon to assist the lead air conditioner some of the time. If this is the case, or possibly when additional heat load is added, using the 2nd stage cooling alarm will cause nuisance alarm conditions.

Note: For units with 2-stage compressors, the dual stage cooling alarm activates on cooling Stage 3 initiation. Menu Step 23, CoPr, must be set to "2" for this to occur, otherwise alarm will activate on cooling call Stage 2 causing nuisance alarm.

For installations where it is known that there is 100% redundancy (one air conditioning unit can handle 100% of the load 100% of the time) use of the 2nd Stage Cooling Alarm is a method to issue an alarm signal that the lead air conditioner is down (or not delivering full capacity) and that the lag air conditioner is now operating.

REFRIGERANT PRESSURE ALARMS

Air conditioners with "J" control module are equipped with an alarm relay that is activated upon high or low refrigerant pressure lockout conditions. Connecting terminals 2 and 3 from the air conditioner 24V terminal block to the matching terminals 2 and 3 on the alarm board will allow these alarms to function.

EMERGENCY VENTILATION SEQUENCE

For units with economizers, there are two (2) emergency ventilation sequences designed into the controller. Both require the -B alarm board and connection of terminals E and F from the air conditioner 24V terminal block to the matching terminals on the alarm board.

Note: The E and F wiring connections at the 24V terminal block in the A/C units are different for older style EIFM economizers than for newer style ECONWMT economizers. Refer to the appropriate Controller Connection diagrams - See Table 1.

Sequence one requires a refrigerant pressure alarm, coupled with high temperature alarm condition No. 1 (HAL 1 set point). If both of these conditions occur, the economizer in the air conditioner that issued the refrigerant alarm will drive open to ventilate the building.

Sequence two (HAL 2 set point) is activated by high temperature alarm No. 2, and will initiate even without a refrigerant pressure alarm signal. Both economizers will be activated to provide emergency ventilation. This strategy help protect against building overheating if air conditioner(s) are inoperative for non-pressure related reasons (bad compressor, contactor, run capacitor, etc.).

NOTE: *The LED display board is polarized and will only fit in one direction as shown. It must be fully inserted in order for the controller to function properly.*

FIGURE 15
ALARM BOARD CONNECTIONS
FOR NORMALLY CLOSED "NC" OPEN-ON-ALARM STRATEGY

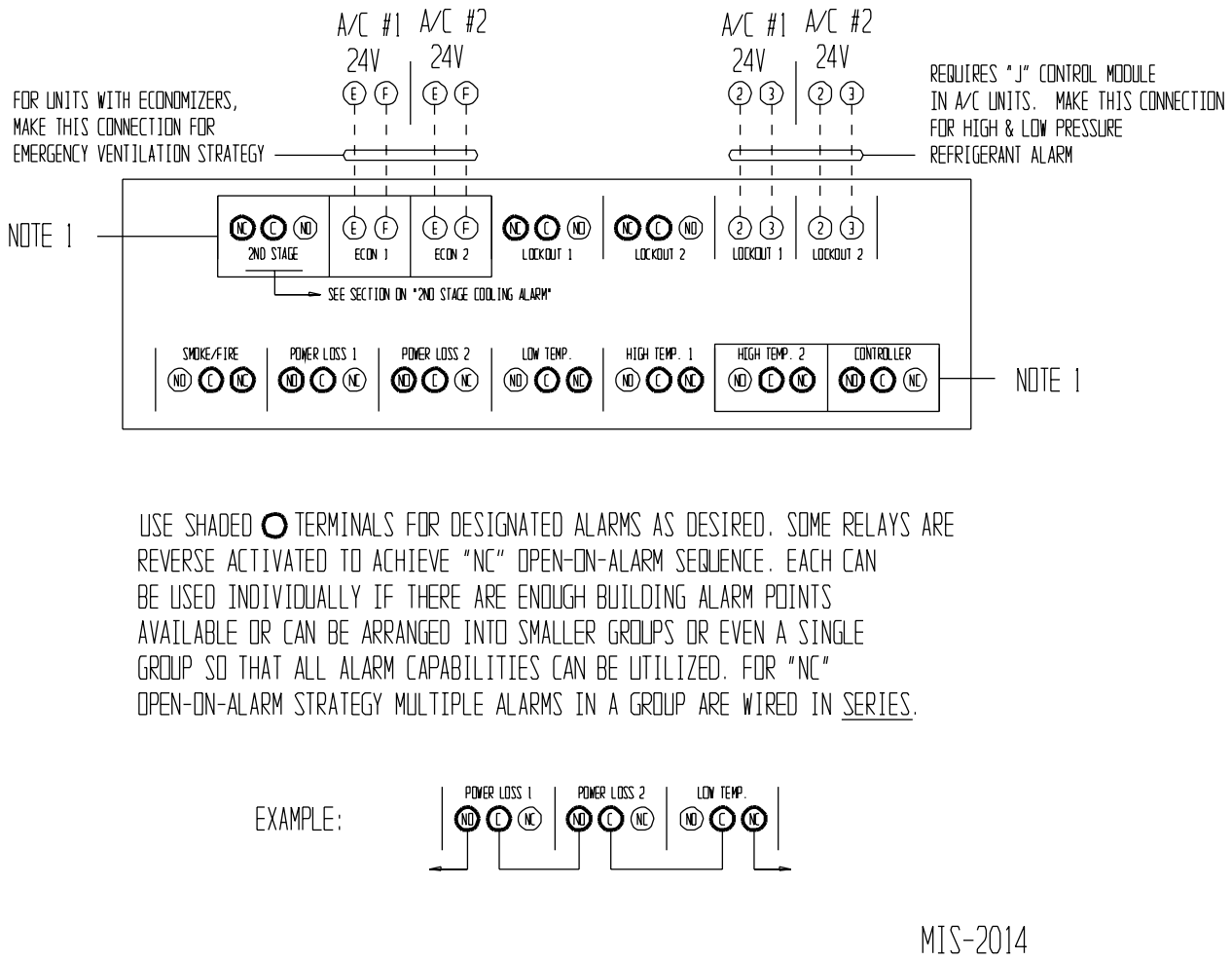

Note 1: 2nd Stage, Econ 1, Econ 2, High Temp 2 and Controller alarms are only on -B alarm board. All other alarms are on both -A and -B alarm boards.

IMPORTANT! *LED display board is shipped loose to protect it from possible damage during installation of the wiring to main controller board and/or the alarm board. It is polarity sensitive and is keyed so it can only be installed in correct position.*

FIGURE 16
ALARM BOARD CONNECTIONS
FOR NORMALLY OPEN "NO" CLOSE-ON-ALARM STRATEGY

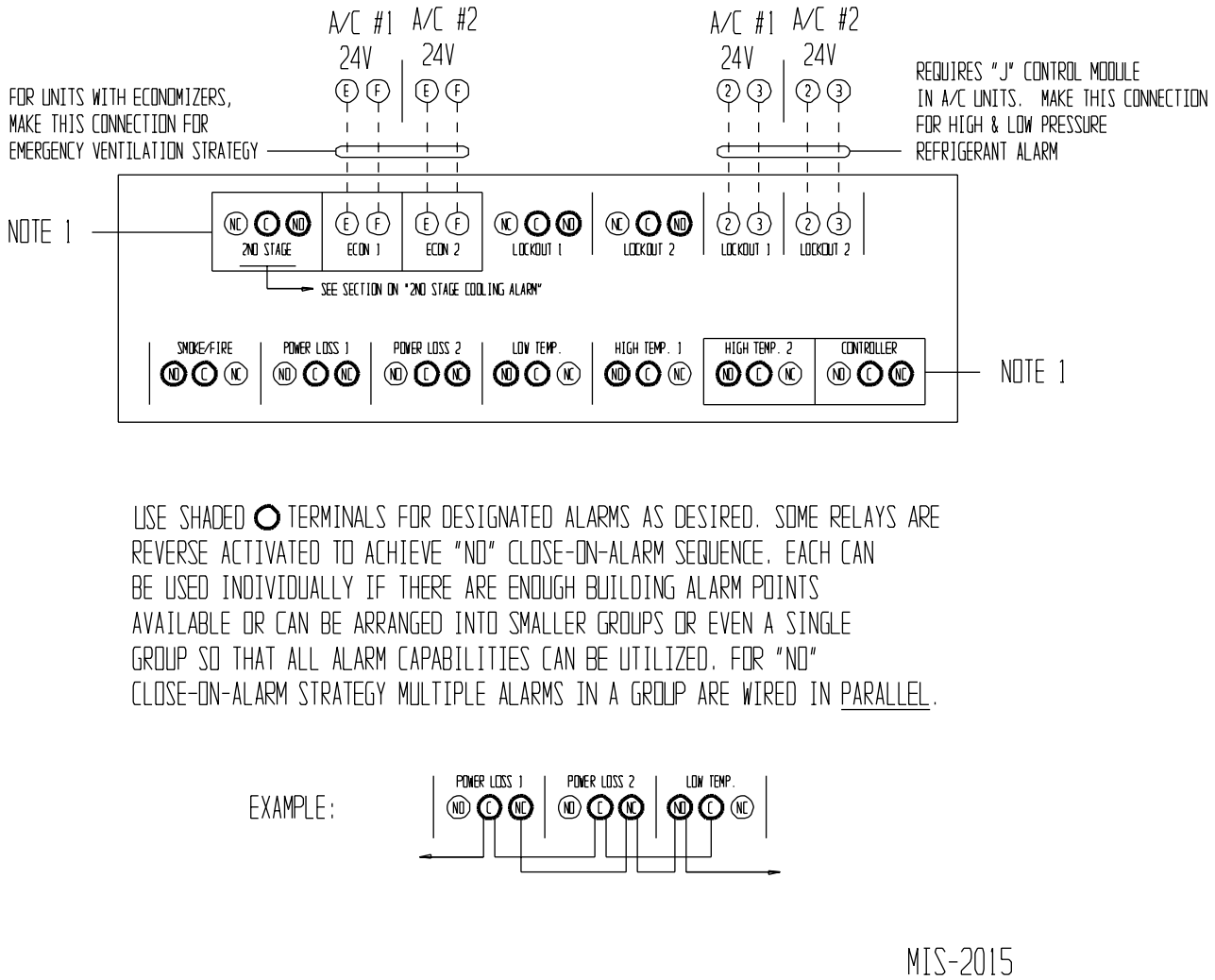

Note 1: 2nd Stage, Econ 1, Econ 2, High Temp 2 and Controller alarms are only on -B alarm board. All other alarms are on both -A and -B alarm boards.

IMPORTANT! *LED display board is shipped loose to protect it from possible damage during installation of the wiring to main controller board and/or the alarm board. It is polarity sensitive and is keyed so it can only be installed in correct position.*

PROGRAMMING INSTRUCTIONS

To swap lead and lag unit positions, press the ADVANCE button.

To enter the Program mode, press the PROGRAM button and release it when the message PROG appears on the display. When in Program mode, the DOWN and UP arrows are used to scroll through the programming steps.

A FLASHING display means that the function or choice is "SET", and the display will alternate between the step function and setting.

To change the setting of any step, press the CHANGE button and the display will stop flashing, allowing change to the setting by using the DOWN or UP arrows. When desired setting is reached, press the SAVE button, and proceed as desired. When done with programming changes, press the PROGRAM button until display stops flashing and room temperature display is shown. If no buttons are pushed within thirty (30) seconds, the controller will automatically revert back to "RUN" mode.

To reset all controller settings to the factory default values, press the PROGRAM button for 10 seconds until display reads dEF.

NOTE: When the controller has the security locking feature enabled, no changes to any selectable features can be made, and the default reset feature is also locked out. All of the programmable features/settings can be reviewed using the Program button and Up or Down arrows, but any attempt to change settings using the Change button will result is display showing "Locd" indicating controller is locked. See section on Security (Locking) Feature.

See next page for Programmable Features, Default Settings and MC4000 front panel label layout.

NOTE: *When using the controller buttons to review settings or making changes,* ***push and hold*** *the buttons for approximately 1 second or until the display changes.*

Quickly pushing or jabbing the buttons will not allow the controller to respond.

Bard SINCE 1914

CLIMATE CONTROL SOLUTIONS

MC4000 Series

Solid State Dual Unit Lead/Lag Controller

	1st Stage	2nd Stage	3rd Stage	4th Stage	
Cooling					
Heating					

Digital Display

Lead Unit — Unit #1 — Unit #2

Dehumid. Operation

On / Off

Program

Advance / Change / Save

Comfort

Alarms

Alarm boards are optional and can be factory or field installed. See inside of controller for any alarm functions.

AB3000-B Alarm Board Functions

- Power Loss Sys. 1
- Power Loss Sys. 2
- Refrig. Alarm Sys. 1
- Refrig. Alarm Sys. 2
- Fire/Smoke Alarm
- Low Temp. Alarm
- High Temp. Alarm 1
- High Temp. Alarm 2
- Lead/Lag Controller Failure Alarm

AB3000-A Alarm Board Functions

Operating Instructions

1. To swap lead and lag units press "ADVANCE".
2. To enter the Program mode press the "Program" button and release it when "Pro9" appears. Use "DOWN" or "UP" arrows to scroll through menu.
3. A "Flashing" display means that the function or choice is "Set", and the display will alternate between the step function and setting.
4. To change the setting of any step press the "Change" button and the display will stop flashing, allowing change to the setting by using the "Down" or "Up" arrows. When desired setting is reached press the "Save" button, and proceed as desired.
5. When done programming press the "Program" button until display stops flashing and room temperature is shown. If no buttons are pushed within 30-seconds the controller will automatically revert back to "Run" mode.

Comfort Mode

Press "Comfort" button once to reset to 72F/22C Cooling and 68F/20C Heating for 1-hour. Display will flash during override period. Press 2nd-time to cancel during override if desired, or controller will automatically revert to selected SP after 1-hour.

Program Menu

NOTE: Push and hold Up or Down arrows for 1-second until display blanks to move between steps.

1	LSEn	Temperature at local (main) Sensor	
2	r1	Temperature at Remote 1 sensor location*	
3	r2	Temperature at Remote 2 sensor location*	
4	SP	Cooling setpoint temperature (65 to 90F or 18.3 to 32.2C - Default is 77F/25C)	
5	db	Deadband between cooling and heating setpoint (2 to 40F or 1.1 to 22.2C - Default is 17F/9.4C)	
6	cFAn	Continuous blower operation (None, Lead, Both - Default is None)	
7	dEG	Degree display (F or C - Default is F)	
8	ALT	Alternating Lead-Lag-Lead-Lag Sequence or Non-Alternating Lead-Lead-Lag-Lag Sequence (Yes or No - Default is Yes for Alternating)	
9	LLCO	Lead-Lag changeover time (Days) (1 to 30 days, or 0 for disabled - Default is 7)	
10	HP	Heat pump logic enabled - only for 1-stage heat pumps and forces Lead-Lag sequence and overrides a Non-Alt setting (Yes or No - Default is No)	
11	CbdS	Unit 1 and 2 blowers automatically both run if delta T>5F between any 2 connected sensors (Yes or No - Default is Yes)	
12	OFdE	3-minute lead unit & 4-minute lag unit off-delay enabled	(Yes or No - Default is No)
13	crun	Minimum of 3-minute compressor runtime enabled	(Yes or No - Default is No)
14	LoAL	Low temperature alarm setpoint	(28 to 65F or 21.1 to 48.8C - Default is 45F/7.2C)
15	HAL1	High temperature alarm Level 1 setpoint (70F to 120F or 21.1 to 48.8C - Default is 90F/32.2C)	
16	HAL2	High temperature alarm Level 2 setpoint	(70F to 120F or 21.1 to 49C - Default is 95F/35C)
17	1Sd2	Inter-stage differential from Stage 1 to 2	(2, 3, 4, 5 or 6F - Default is 4)
18	1Sd3	Inter-stage differential from Stage 2 to 3	(2 or 3F - Default is 2)
19	1Sd4	Inter-stage differential from Stage 3 to Stage 4	(2 or 3F - Default is 2)
20	CSon	Turn "On" above SP for Stage 1 Cooling	(+1 or +2 - Default is +2)
21	CSoF	Turn "Off" below SP for Stage 1 Cooling Note: For CSon and CSoF Stage 2, 3 and 4 Cooling are automatically same as Stage 1	(-1, -2, -3, or -4F - Default is -2)
22	HSoo	All Heating stages are equal -/+ On & Off differential	(-1/+1 or -2/+2 - Default is -2/+2)
23	CoPr	1 or 2-stage compressor, if set to 1 the 2nd-Stage Cooling Alarm activates on Cooling Call 2 If set to 2 the 2nd-Stage Cooling Alarm activates on Cooling Call 3.	(1 or 2 - Default is 1)
24	Locd	Controller is Locked. Consult building authority for further instructions.	

* r1 and r2 will display temperature only if optional remote sensors are installed. If sensors are not installed these are omitted in the display sequence. If r1 and/or r2 sensor installed the MC4000 will control to the "average" of the connected sensors. Consult installation instructions for additional details.

7961-731

FIGURE 17
PARTS LIST DESCRIPTION DIAGRAM

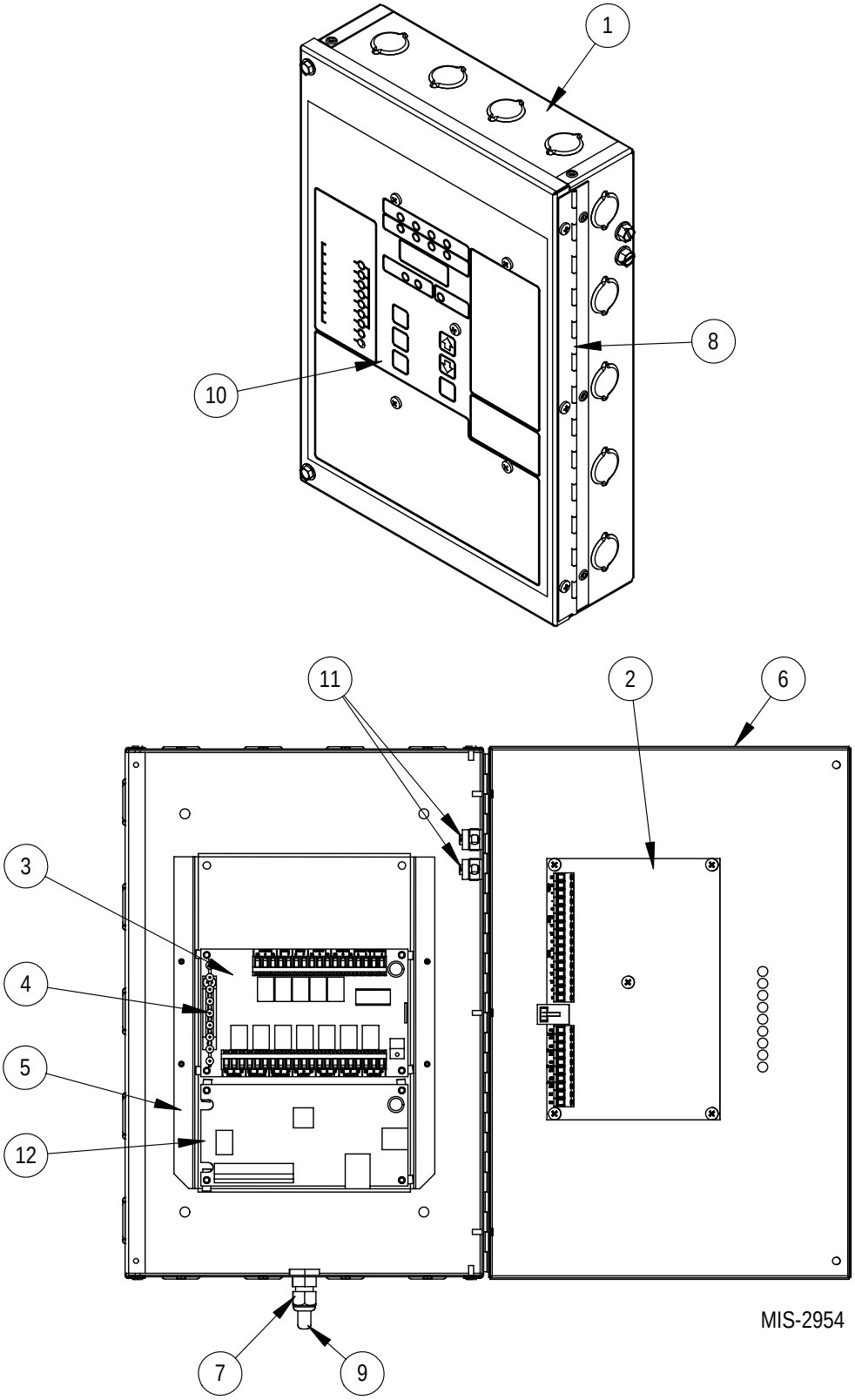

Parts List

Dwg. No.	Part No.	Description	MC4000	MC4000-A	MC4000-AC	MC4000-B	MC4000-BC	AB3000-A	AB3000-B	CB4000
1	127-343-4	Control Box	X	X	X	X	X			
2	8612-034	Controller Board	X	X	X	X	X			
3	8612-020	Alarm Board A		X	X			X		
3	8612-021	Alarm Board B				X	X		X	
4	8612-022	Alarm Display		X	X	X	X	X	X	
5	113-430-4	Support Bracket	X	X	X	X	X			
6	152-385-4	Control Box Door	X	X	X	X	X			
7	8611-099	LTF Fitting	X	X	X	X	X			
8	5400-002	Hinge	X	X	X	X	X			
9	8612-023	Sensor	X	X	X	X	X			
10	7961-731	Label/Keypad	X	X	X	X	X			
11	8611-006	Ground Lug	2	2	2	2	2			
12	8612-035	Communication Board			X		X			X

This page intentionally left blank.

This page intentionally left blank.

This page intentionally left blank.