# INSTALLATION INSTRUCTIONS & REPLACEMENT PARTS LIST

## MD4000 SERIES SOLID STATE DUAL UNIT LEAD/LAG CONTROLLER for use with H-Series Wall Mount Air Conditioners with F & G Spyder™ Economizers only

Bard Manufacturing Company, Inc.
Bryan, Ohio 43506

*Since 1914...Moving ahead, just as planned.*

Manual No.: 2100-574A
Supersedes: 2100-574
File: Vol. III Tab 19
Date: 10-16-12

# CONTENTS


**Getting Other Information and Publications** 3
**MD4000 General Information**
Shipping Damage....4
General....4
Theory of Operation....4
Controller Certifications....4
**Specifications/Features for MD4000 Series Controller**
MD4000 Controller....5
**Mounting the Controller**
Installation Instructions....5
**Temperature Sensors**
Two Optional Sensor Inputs....5
**Temperature Sensor Logic**
Using Multiple Sensors....5
**Basic MD4000 Controller Input/Output Specs.**
MD4000 Controller Connections....6
**Located in the MD4000 Panel Box**
Unit #1 & Unit #2 Terminal Block....6
**Specifications/Features for Alarm Boards**
MD4000-B & -BC w/Controller Alarms....7
**Low Voltage Field Wiring**
Circuitry in the MD4000....7
**Controller Grounding**
Earth ground....7
**Controller Power-Up**
Time Delay on Power-Up....7
**Fire Suppression Circuit**
Disabling the MD4000....8
**Staging Delay Periods**
Stages 1 - 4....8
**Blower Operation**
Various Blower Options....8
**Advance (Swap) Lead/Lag Unit Feature**
Manual Switching of Units....8
**Accelerate Timer Feature**
Testing the Timer Function....8
**General Programming Overview**
Buttons & Function....9
**Heating Sequence of Operation**....10
**Specifications Opt. Remote Comm. Board**
CB4000 Communications Board....11-12
**Controller Wiring**
Refer to Connection Diagram....13
**Security (Locking) Feature**
Locking and Unlocking the MD4000....13
**Generator Run / Economizer Shutdown Feature**
Standby Generator Disable Operation....13
**Backup DC Power Connection**
Input Connections Available....13
**Economizer Failure Alarm**....16
**Dirty Filter Alarm**....16
**2-Compressor Run Alarm**....16
**Alarm Wiring**....16
**2nd Stage Cooling Alarm**....17
**Refrigerant Pressure Alarms**....17
**Spyder Economizer Displays**....17
**Emergency Ventilation Sequence**....17
**Programming Instructions**....20


**Figures**


— — — MD4000 Flow Chart....10
Figure 1 Controller Connections 1-Stage (H**A/L Series) A/C w/ECONWMT Econ....14
Figure 2 Controller Connections 1-Stage (H**A/L Series) A/C w/ ECONWMT Econ. & w/Alarm Board & CB4000 Comm. Board....15
— — — Alarm LED Display Board....16
Figure 3 Alarm Board Connections for Normally Closed "NC" Open-On-Alarm Strategy....18
Figure 4 Alarm Board Connections for Normally Open "NO" Close-On-Alarm Strategy....19
— — — MD4000 Label....21
Figure 5 Parts List Description Diagram....22


**Tables**


Controller Prog. Features & Defaults....9
Table 1 Hook-Up Diagram Selection....14
Table Parts List....23

# Getting Other Information and Publications

These publications can help you install the air conditioner or heat pump. You can usually find these at your local library or purchase them directly from the publisher. Be sure to consult current edition of each standard.

Standard for the Installation..... ANSI/NFPA 90A
of Air Conditioning and
Ventilating Systems

Standard for Warm Air Heating ..... ANSI/NFPA 90B
and Air Conditioning Systems

## FOR MORE INFORMATION, CONTACT THESE PUBLISHERS:

**ACCA** **Air Conditioning Contractors of America**
1712 New Hampshire Avenue, NW
Washington, DC 20009
Telephone: (202) 483-9370
Fax: (202) 234-4721

**ANSI** **American National Standards Institute**
11 West Street, 13th Floor
New York, NY 10036
Telephone: (212) 642-4900
Fax: (212) 302-1286

**ASHRAE** **American Society of Heating, Refrigerating, and Air Conditioning Engineers, Inc.**
1791 Tullie Circle, N.E.
Atlanta, GA 30329-2305
Telephone: (404) 636-8400
Fax: (404) 321-5478

**BARD** **Bard Manufacturing Company, Inc.**
1914 Randolph Drive
Bryan, OH 43506
Telephone: (419) 636-1194
Fax: (419) 636-2640

# ** IMPORTANT **

The equipment covered in this manual is to be installed by trained, experienced service and installation technicians. Please read entire manual before proceeding.

## SHIPPING DAMAGE

Upon receipt of equipment, the carton should be checked for external signs of shipping damage. If damage is found, the receiving party must contact the last carrier immediately, preferably in writing, requesting inspection by the carrier's agent.

## GENERAL

These instructions explain the operation, installation and troubleshooting of the MD4000 Series controller.

All internal wiring is complete. Only attach low voltage field wiring to designated terminal strips.

The MD4000 is for use with units with economizers.

Each unit should be sized to handle the total load of the structure if 100% redundancy is required.

The MD4000 controller is suitable for both 50 and 60 HZ operation. See Controller Programmable Features and Default Settings.

## THEORY OF OPERATION

The controller is used to control two wall mount air conditioners from one control system. It provides total redundancy for the structure and equal wear on both units. It must be used with units with economizers and both units be equipped alike.

The MD4000 controller is configured for alternative (lead/lag/lead/lag) sequence, which is default setting.

The MD4000 works in conjunction with the Economizer Logic Modules to provide room temperature control based on the DC amp load that the building is using.

The Economizer Logic Modules, in the air conditioner, control the cooling stages and functions. The MD4000 controls the heating stages, lead lag operation and alarming operation for the system.

The MD4000 is equipped with the B alarm board.

Form C dry contact alarm relays are used, offering both NO and NC switching to meet the user's specific alarm protocol, providing complete flexibility to meet any user's requirements. All alarm actuations are individually indicated on the controller front panel.

There is an Ethernet based remote communication option that can be either factory or field installed. See section on Communication Module.

## CONTROLLER CERTIFICATIONS

The MD4000 main controller board, alarm board, optional communication module, and remote sensors have undergone extensive testing for immunity and emissions. This system is FCC-compliant, in accordance with CE requirements, and meets the following standards:

**MD4000 Series**
**Master Controller**

This device complies with FCC Rule Part 15, Subpart B, Class A. Operation is subject to the following two conditions:

1. This device may not cause harmful interference
2. This device must accept any interference received, including that which may cause undesired operation.

This device complies with CE Standards EN55011/ EN50081 and EN55024 for ISM Equipment, Class A.

This ISM device also complies with Canadian ICES – 001.

**Bard Manufacturing Company, Inc.**
**Bryan, OH 43506**

## SPECIFICATIONS/FEATURES FOR MD4000-B CONTROLLER

**MD4000 Basic Controller**

•Input power: 18-32 VAC, 60/50Hz, power is supplied from A/C #1 and/or A/C #2
•Isolation circuitry: no line or low voltage phasing required
•Backup power: connection for -24 VDC or -48 VDC (-20 to -56V) maintains microprocessor operation, front panel indication & alarm relay operation during commercial power outages.
•Digital display: 4-character LCD
•Temperature display: F or C
•HVAC outputs: Form A (NO) relays (1A @ 24 VAC)
•Cooling control stages:
2 for each A/C unit (4 total)
•Heating Control stages:
1 for each A/C unit
•Operating temperature range: 0 to 120F (-18 to 49C)
•Storage temperature range: -20 to 140F (-29 to 60C)
•Temperature accuracy: +/- 1F from 60-85F (16-30C)
+/- 1% outside 60-85F
•Lead/lag changeover time: 0 to 30 days
•Timing accuracy: +/- 1%
•Inter-stage time delay: 10 seconds between stages
•On-Off differential: 2F (1C) is standard, 4F (3C) when "excessive cycling" mode is enabled
•Comfort setting, Heating 68F(20C), for 1 hour
•Dead band (difference between cooling and heating set points): 2F to 40F (1.1C to 22.2C)
•Fire/smoke interface: standard NC circuit jumper, remove for connection to building system control, shuts down both A/C units immediately
•Memory: EEPROM for set point and changeable parameters (maintains settings on power loss)
•Space temperature sensors: 1 local is standard, will accept up to 2 optional 25' remote sensors, Bard part number 8612-023. When multiple sensors are used, temperatures are averaged
•Controller Enclosure: 20-gauge pre-painted steel, 9.25"W x 20.875"H x 3.00"D, hinged cover, twenty four (24) .875" diameter electrical knockouts
•LEDs for basic controller: Lead unit, Heating Stages 1 – 4
•Six (6) Push-button controls: On/Off switch-Change lead unit-Increase & Decrease set points-Program/Save-Comfort.

## MOUNTING THE CONTROLLER

Included in the controller carton is the controller and installation instructions.

The controller should be installed on a vertical wall approximately four (4) feet above the floor-away from drafts & outside doors or windows. Four (4) mounting holes are provided for mounting to the wall and 7/8" holes for conduit connections are provided in both the base, sides & top of the controller.

## TEMPERATURE SENSORS

The standard (local) temperature sensor has 12" leads and comes installed from the factory.

A secondary sensor is located internally on the main controller board and serves as a reference and back-up sensor to the local sensor. Any differential of +/- 12F between the on-board and local sensor will cause the controller to use the local sensor as its point of reference. If the differential is greater than 12F then the controller will check to determine the on-board sensor is reading a temperature that is between the SP (set-point) plus 12F and the SP minus the DB (dead-band) minus 12F. If it is the on-board sensor will become the valid sensor reading and the controller will ignore the local sensor reading. If it is not then the controller will still use the local sensor reading. This is to add additional level of operational capability in the rare event the local sensor fails. If the controller is operating in this mode it is indicated by the lower left decimal point flashing in the display. ***Note: for purposes of testing when the local sensor is manually driven higher or lower by applying warm or cool water to the probe the on-board sensor is inhibited for the first 30-minutes following power up, or when power is cycled off and back on.***

The controller is designed to accept 1 or 2 additional sensors and those have 25-foot leads. The Bard part number for the optional sensor with 25-foot leads is 8612-023. These can be installed as required in the structure to address hot spots, barriers to airflow, etc.

It is recommended that the sensor lead wires be installed in conduit for protective purposes.

The highest reading of any connected sensor will be used for high temperature alarm and the lowest reading sensor will be used for low temperature alarm.

***NOTE:*** **All sensors are polarity sensitive. The copper lead must connect to terminal CU, and the silver lead to AG. Sensors are solid state, not RTD. Use only sensors supplied by Bard. Sensor leads can be extended up to 200 feet. Use 18-gauge twisted pair with soldered connections.**

## TEMPERATURE SENSOR LOGIC

The standard local **(LSEn)** sensor monitors the temperature at the controller location. If this is the only sensor connected, it will control the temperature read-out, the space (building) temperature, and also be used for Low and High Temperature alarm functions.

If one or more **REMOTE** sensors are installed and connected (**Rem 1** or **Rem 2**), the temperature read-out will display and the building will be controlled to an **average** of all connected sensors. If there is more than 10F difference from the highest to the lowest connected sensor, the actual control will be governed by the hottest sensor for cooling and the coldest sensor for heating.

If multiple temperature sensors are used, the High and Low temperature alarms will be governed by the average of the connected sensors.

## BASIC MD4000 CONTROLLER INPUT/OUTPUT SPECIFICATIONS

### MD4000 CONTROLLER CONNECTIONS

**Located on Main Controller Board**

**Unit #1** C – 24VAC common
R – 24VAC hot
G – fan (Form A, NO)
W – heat (Form A, NO)

**Unit #2** C – 24VAC common
R – 24VAC hot
G – fan (Form A, NO)
W – heat (Form A, NO)

**F1-F2** Fire/smoke interface
Shipped with jumper installed (a)

**48Vdc** Back-up power input
-24Vdc or –48Vdc
-20V to –56V range

**Local** Main sensor, 12-inch leads
CU – copper, AG – silver
Polarity sensitive

**Rem 1** Optional remote indoor sensor
CU – copper, AG – silver
Polarity sensitive

**Rem 2** Optional remote indoor sensor
CU – copper, AG – silver
Polarity sensitive

**H1-H2** Humidity controller input
Requires optional controller
Field installed

**Advance** Input used to remotely toggle lead/lag change

> ***NOTE:***
> *Sensors are solid state, not RTD.*
> *Use Bard sensors only.*

(a) These connections require either jumper or Normally Closed (NC) relay contact at the Fire/Smoke and Generator interface for Controller to function.

**Note:** All alarm and output relays are dry contacts rated 1A @ 24 VAC.

**Note:** All alarm relay outputs have 10-second delay before issuing to protect against nuisance alarm signals.

## LOCATED IN THE MD4000 PANEL BOX

**Unit #1 Terminal Block**

R – 24VAC hot from Unit
C – 24VAC common from Unit
Y – Compressor Signal to Unit
F – Economizer Shutdown Output to Economizer
A – Compressor Signal from Economizer
4 – Dirty Filter Alarm from Unit
5 – Dirty Filter Alarm from Unit
6 – Signal Common for F
8 – Economizer Fail from Unit
9 – Economizer Fail from Unit
10 – Emergency Vent Output to Economizer
41 – To Unit 2, 43
42 – To Unit 2, 44
43 – To Unit 2, 41
44 – To Unit 2, 42
45 – To Unit 2, 45 DCA Input
46 – To Unit 2, 46 DCA Input
47 – To Unit 1 Display
48 – To Unit 1 Display

**Unit #2 Terminal Block**

R – 24VAC hot from Unit
C – 24VAC common from Unit
Y – Compressor Signal to Unit
F – Economizer Shutdown Output to Economizer
A – Compressor Signal from Economizer
4 – Dirty Filter Alarm from Unit
5 – Dirty Filter Alarm from Unit
6 – Signal Common for F
8 – Economizer Fail from Unit
9 – Economizer Fail from Unit
10 – Emergency Vent Output to Economizer
41 – To Unit 1, 43
42 – To Unit 1, 44
43 – To Unit 1, 41
44 – To Unit 1, 42
45 – To Unit 1, 45 DCA Input
46 – To Unit 1, 46 DCA Input
47 – To Unit 2 Display
48 – To Unit 2 Display

**Gen Run/Econ Shutdown Terminal Block(a)**

Gen Run Input

**Economizer Fail Terminal Block**

Alarm Output

*Alarm relays can be wired for NO (close on alarm) or NC (open on alarm) strategy. Alarm relays can be used individually if there are enough available building alarm points, or can be arranged into smaller groups or even a single group so that all alarm capabilities can be utilized. When multiple alarms are grouped together and issued as a single alarm there will be no off-site indication of which specific problem may have occurred, only that one of the alarms in the group has been triggered. The individual alarm problem will be displayed on the LED display on face of the controller.*

## SPECIFICATIONS/FEATURES FOR MD4000-B & -BC CONTROLLER ALARMS

**Inputs**

| | |
|---|---|
| Lockout 1 | 2, 3 – input from HVAC #1 |
| Lockout 2 | 2, 3 – input from HVAC #2 |

**Outputs**

| | |
|---|---|
| Smoke/Fire | Form C (SPDT) |
| Lockout 1 | Form C (SPDT)<br>Refrigerant alarm HVAC #1 |
| Lockout 2 | Form C (SPDT)<br>Refrigerant alarm HVAC #2 |
| Power Loss 1 | Form C (SPDT)<br>Power loss HVAC #1 |
| Power Loss 2 | Form C (SPDT)<br>Power loss HVAC #2 |
| Low Temp | Form C (SPDT)<br>Low temperature alarm |
| High Temp 1 | Form C (SPDT)<br>High temperature alarm #1 |
| High Temp 2 | Form C (SPDT)<br>High temperature alarm #2 |
| Controller | Form C (SPDT)<br>Controller failure alarm |
| Econ 1 | E, F - Form A (NO)<br>See note (b) |
| Econ 2 | E, F - Form A (NO)<br>See note (b) |
| 2nd Stage (c) | Form C (SPDT)<br>2nd-stage cooling alarm |

(b) Make these connections to terminals E & F in HVAC 1 and 2 respectively if desired to have economizers open for emergency ventilation at High Temp Alarm #2 setpoint condition.

(c) For units with 2-stage compressors, 2nd stage cooling alarm activates on cooling Stage 3 initiation.

| | |
|---|---|
| 2nd Compressor | Form A (NC) |
| Dirty Filter | Form A (NC)<br>4, 5 – Input from Unit |
| Economizer Fail | Form A (NC)<br>8, 9 – Input from Unit |

## LOW VOLTAGE FIELD WIRING

The MD4000 is powered from the air conditioners that it is controlling, 24 VAC (18-32V) low voltage only.

Circuitry in the MD4000 isolates the power supplies of the two air conditioners so that no back feeds or phasing problems can occur. Additionally, if one air conditioner loses power, the MD4000 and the other air conditioner are unaffected and will continue to operate normally.

Connect the low voltage field wiring from each unit per the low voltage field wiring diagrams in Section on "Controller Wiring". *NOTE: Maximum of 18-gauge control wiring should be used. Using heavier gauge wiring can create excessive stress on the control board as door is opened and closed. Create a wiring loop so the door can open and close without stressing terminal blocks.*

## CONTROLLER GROUNDING

A reliable earth ground must be connected in addition to any grounding from conduit. Grounding lugs are supplied for this purpose.

## CONTROLLER POWER-UP

Whenever power is first applied to the controller, there is a twenty (20) second time-delay prior to any function (other than display) becoming active. This time-delay is in effect if the controller On/Off button is used when 24VAC from air conditioners is present, and also if controller is in "ON" position and 24VAC from air conditioners is removed and then restored.

## FIRE SUPPRESSION CIRCUIT

To disable the MD4000 and shut down both air conditioners, terminals F1 and F2 may be used. The F1 and F2 terminals must be jumpered together for normal operation. A normally closed (nc) set of dry contacts may be connected across the terminals and the factory jumper removed for use with a field-installed fire suppression system. The contacts must open if a fire is detected. See appropriate connection diagram - Figures 1, 2 or 3 for this connection. Contacts should be rated for pilot duty operation at 2 amp 24VAC minimum. Shielded wire (22-gauge minimum) must be used, and the shield must be grounded to the controller enclosure.

## STAGING DELAY PERIODS

The following delays are built in for both cooling & heating:

**Stage 1** – 0 seconds for blower (if not already on as continuous)
10 seconds for cooling or heating output

**Stage 2** – 10 seconds after Stage 1 for blower
10 additional seconds for cooling or heating output

**Stage 3** – 10 seconds after Stage 2

**Stage 4** – 10 seconds after Stage 3

**Note:** For cooling Stages 1 and 2, the stage LED will blink for 10 seconds while the cooling output is delayed after that stage is called for. There is also a delay after the stage is satisfied, and after the LED stops blinking, the stage will turn off. There is a minimum 10-second delay between stages 2 & 3, and 3 & 4, but no delayed output when stage is turned on or off, and LED for those stages will not blink.

## BLOWER OPERATION

The controller can be configured to have main HVAC blowers cycle on and off on demand; have all blowers run continuously; or have the lead unit blower run continuously with the lag unit blower cycling on demand. Default setting is the blower on the lead unit operates continuously. There is also an option to have all blowers cycle on if one remote sensor is connected, and a temperature difference of more than 5F between any two sensors is observed. This helps to redistribute the heat load within the structure and should reduce compressor operating time.

When any of the stages are satisfied, the stage LED will blink for ten (10) seconds before the stage is actually turned off.

## ADVANCE (SWAP) LEAD/LAG UNIT FEATURE

Pressing the Advance button for one (1) second will cause the lead and lag units to change positions. This may be useful during service and maintenance procedures. This function can also be done remotely by closing a contact across the Advance terminals on the main board.

## ACCELERATE TIMER FEATURE

Pressing the UP arrow button for five (5) seconds will activate an accelerate (speed-up) mode, causing the normal changeover time increments of days to be reduced to seconds. Example: 7 days becomes 7 seconds. When “ACC” displays, release button. Whichever LED is on, indicating lead unit will blink over for each second until the controller switches. This is a check for the timer functionality.

## GENERAL PROGRAMMING OVERVIEW
## MD4000 CONTROLLER BUTTONS AND FUNCTION

### On/Off Button

1. Press and release the On/Off button to turn On controller, 4-character display will illuminate and Lead unit LED will light.
2. Press and release the On/Off button to turn Off controller. Controller will go dark and A/C units will stop.

### Comfort Button

1. Press and release the Comfort button to change the Cooling Set Point to 72F and the Heating Set Point to 68F for a period of 1 hour.
2. Set Points will return to the programmed settings automatically after 1 hour.
3. Pressing the Comfort button during the 1 hour period will deactivate the Set Point change.
4. The temperature display will flash the current temperature while in override mode.

### Program Button

1. Press the Program button and release it when the message “Prog” appears on the display.
2. Refer to Programming Instructions and follow these commands to change from Default settings.

### Advance/Change/Save Button

1. Press and release the Advance button to swap lead and lag unit positions.
2. When in Program mode the Down and Up buttons are used to scroll through the programming steps.
3. A flashing display means that the particular function of that programming step is “set”, and the display will alternate between the step function and the setting.
4. To change the setting press the Change button and the display will stop flashing, allowing change to the setting.
5. Use Down or Up arrows to change setting as desired, and press the Save button and proceed as desired.
6. When done with programming changes press the Program button until display stops flashing and room temperature is shown.

### Up and Down Buttons

These buttons are used to change the settings in conjunction with the Advance/Change/Save button when in programming mode.

## CONTROLLER PROGRAMMABLE FEATURES AND DEFAULT SETTINGS

| Order / Display | Description | Range / Choice | Default |
|---|---|---|---|
| LSEn | Temperature at local (main) sensor | — | — |
| SP | Cooling set point temperature | 65 to 90F (18 to 32C) | 77F (25C) |
| db | Deadband between cooling SP and heating set point | 2 to 40F (1 to 24C) | 27F (15C) |
| r1 | Temperature at remote sensor 1 location, if connected | — | — |
| r2 | Temperature at remote sensor 2 location, if connected | — | — |
| cFAn | Continuous blower operation | None, Lead, Both | Lead |
| deg | Controller system operates in F or C | F or C | F |
| Alt | Alternating Lead-Lag-Lead-Lag sequence or Non-Alternating Lead-Lead-Lag-Lag sequence — Yes = Alternating | Not Used | Yes |
| LLCO | Lead-Lag changeover time (Days) | 1 - 30 days, or 0 for disabled | 7 |
| HP | Heat pump logic enabled — only for 1-stage heat pumps and forces Lead-Lag sequence (overrides a Non-Alt setting) | Not Used | No |
| Cbd5 | Unit 1 and 2 blowers automatically both run if delta T >5F between any 2 connected sensors | Yes or No | Yes |
| OFde | 3-minute lead unit & 4-minute lag unit off-delay enabled | Not Used | No |
| crun | Minimum 3-minute compressor runtime enabled | Not Used | No |
| LoAL | Low temperature alarm setpoint | Not Used | 45F (7.2C) |
| HAL1 | High temperature alarm level #1 setpoint | 70F to 120F (21 to 49C) | 90F (32C) |
| HAL2 | High temperature alarm level #2 setpoint | 70F to 120F (21 to 49C) | 95F (35C) |
| Locd | Controller is locked and no changes can be made. Consult building authority. | If locked, display will show Locd if changes attempted | Unlocked |
| ***Inter-Stage Differential*** | | | |
| ISd2 | From Stage 1 to Stage 2 | Not Used | 4 |
| ISd3 | From Stage 2 to Stage 3 | Not Used | 2 |
| ISd4 | From Stage 3 to Stage 4 | Not Used | 2 |
| ***On/Off Differential (Hysterisis)*** | | | |
| CSon | Turn "On" above SP for Stage 1 Cooling | Not Used | 2 |
| CSoF | Turn "Off" below SP for Stage 1 Cooling | Not Used | -4 |
| | Stage 2, 3 and 4 Cooling automatically set same as Stage 1 decisions | | |
| HSoo | All Heating Stages are equal -/+ on & off differential | -1/+1 or -2/+2 | -2/+2 |
| CoPr | 1 or 2-stage compressor, if set to 1 the 2nd stage Cooling Alarm activates on Cooling Call 2, if set to 2 the 2nd stage Cooling Alarm activates on Cooling Call 3 | Not Used | 1 |

## HEATING SEQUENCE OF OPERATION

***Note:*** *All heating sequences for air conditioners with electric heat will automatically operate in Alternating Lead/Lag/Lead/Lag sequence even if controller is set to Non-Alternating for cooling with or without economizers.*

### 1. <u>Air Conditioners with Electric Heat</u>

1st stage heating set point is the dead-band (db) below the 1st stage cooling set point (the SP entered into the program). The dead-band is adjustable from 2-40F, and factory default is 27F.

2nd stage heating set point will operate at same inter stage differential as set for cooling mode.

MD4000-BCESDC/MD4000-BESDC
W/ AC UNITS W/ DC CONTROL
ECONOMIZERS

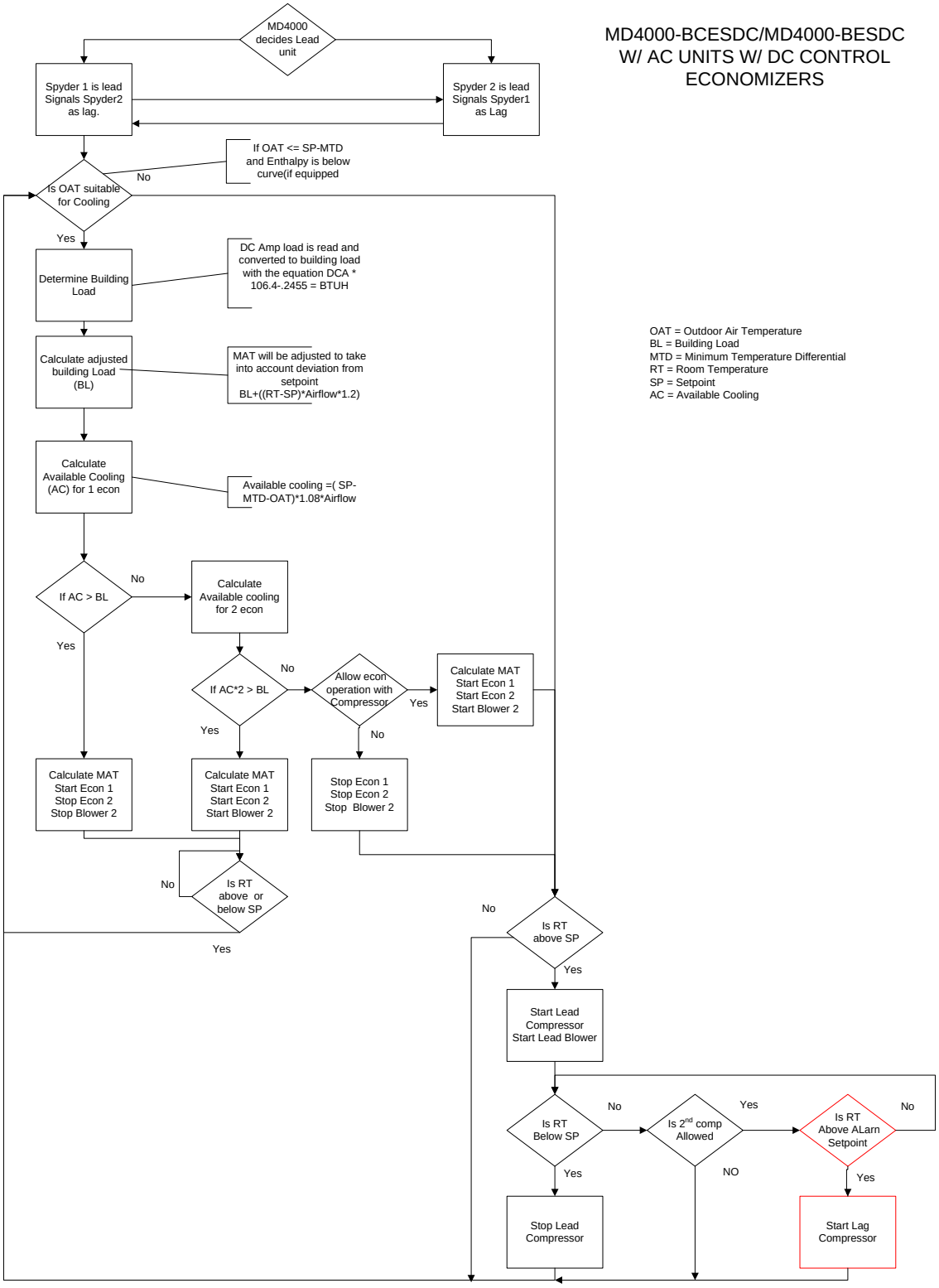


OAT = Outdoor Air Temperature
BL = Building Load
MTD = Minimum Temperature Differential
RT = Room Temperature
SP = Setpoint
AC = Available Cooling

## SPECIFICATIONS FOR OPTIONAL REMOTE COMMUNICATION BOARD

### CB4000 COMMUNICATION BOARD

***Note:*** *If this communication board was not originally factory installed it can be field-installed at anytime. Bard part number is CB4000. It allows remote access via Ethernet, depending upon level of authority assigned, to all functions of the controller system the same as it one was in the building where the controller system is physically installed.*

**Required Input Connections to the CB4000 (these are all internal connections from either the alarm board or main controller board):**

1. Fire/smoke connection from MD4000 main controller board.
2. Refrigerant lockout inputs.
3. If economizers are used an additional 24V signal wire is required from each air conditioner to the controller system.
4. Communication cable from CB4000 plugs into phone jack connection on main MD4000 controller board.

### OPERATING SYSTEM

No special software is required to access the system. The CB4000 has a default address, simply follow these instructions:

### TO ACCESS THE SYSTEM

1. Connect CAT 5 or CAT 6 Ethernet cable from computer to Ethernet port on the CB4000.
2. Change your computer's IP address as shown below to gain initial access to the CB4000.

> NOTE 1: Record your computer's current IP settings **BEFORE** making any changes. You will need to reset back to these original settings once you've assigned an IP address to the CB4000.

**For XP or Windows 2000:**

1. Open Control Panel, double click Network Connections.
2. Double click Local Area Connection on the General tab and select Properties.
3. Using the General tab, scroll to Internet Protocol (TCP/IP).
4. Highlight Internet Protocol (TCP/IP) and select Properties.
5. Change the addresses as follows:

| | |
|---|---|
| IP address: | 192.168.1.50 |
| Subnet mask: | 255.255.255.0 |
| Default gateway: | 192.168.1.1 |
| Preferred DNS server: | 192.168.1.10 |
| Alternate DNS server: | 192.168.1.11 |

6. Click OK and close all windows.
7. Start your browser, enter the CB4000's default IP address **192.168.1.67** and hit Enter.
8. The MD4000 log-in page should appear.

**For Vista or Windows 7:**

1. Open Control Panel, click Network & Internet.
2. Click Network & Sharing Center.
3. Click Local Area Network link.
4. Click Properties.
5. Highlight Internet Protocol Version 4 (TCP/IPV4) and select Properties.
6. Change the addresses as follows:

| | |
|---|---|
| IP address: | 192.168.1.50 |
| Subnet mask: | 255.255.255.0 |
| Default gateway: | 192.168.1.1 |
| Preferred DNS server: | 192.168.1.10 |
| Alternate DNS server: | 192.168.1.11 |

7. Click OK and close all windows.
8. Start your browser, enter the CB4000's default IP address **192.168.1.67** and hit Enter.
9. The MD4000 log-in page should appear.

### LOG IN PAGE

1. Type in "Admin" for the user name and "Bard" for the password. These are case sensitive. Hit "Log In".
2. Click the "System Setup" button.

### SYSTEM SETUP PAGE

***Note:*** *If the remote user is on a different subnet than the CB4000 it is recommended that Static IP Addressing be used rather than DHCP.*

IF YOUR NETWORK USES STATIC IP ADDRESSING

1. Enter the correct address information provided by your IT department and click the "Save Config" button.
2. The assumption is that the new IP address has already been configured into the network to get through any firewall(s).
3. Disconnect the Ethernet cable from the computer and plug into your router.
4. Change your computer system's IP address back to their previous settings from **Note 1.**
5. Type the new IP address into the browser and make any changes to the MD4000 system before logging out.

IF YOUR NETWORK USES DHCP

1. Check the "Enable DHCP" box.
2. Click "Save Config" box (it will take several seconds before you receive a message that you are now offline. At this point the unit is now running in DHCP mode).
3. Change your computer system's IP address back to their previous settings from **Note 1.**
4. Type **CB4000** in the browser's URL address bar to access the CB4000.

> NOTE 2: If you need to get back to the CB4000 default IP setting simply hold the reset button next to the phone jack for 5+ seconds, then release.

**USER PAGE**

1. The designated Admin person can assign up to 9 additional users and set-up as Admin, Write or Read authority.
2. User Name and password must be assigned, each must be at least 3 characters long, and are case sensitive.
3. Only "Admin" can add, change or delete users and has access to all controller pages.
4. "Write" can make changes to the controller settings and operating characteristics, and has access to only Log In, System Status, Setpoints, and Log Out pages.
5. "Read" can only view Status and Setpoints pages and cannot make any changes.

**SYSTEM STATUS PAGE**

1. <u>This page shows the overall HVAC status of:</u>
   a. Active cooling or heating stages or dehumidification mode (requires humidity sensor)
   b. Active controller outputs (blower, Stage 1 or 2, heating) to each air conditioner
   c. Which unit is the Lead unit
   d. Power loss or refrigerant lock-out for each air conditioner
   e. If economizers are used, this will show if the economizers are on or off.
2. <u>General status of:</u>
   a. Backup Generator Active or not (if tied to generator run controls to inhibit lag unit operation during generator run)
   b. Alarm board connected or not
   c. Controller system Locked or Unlocked
   d. Comfort mode Active or not
3. <u>Temperatures:</u>
   a. Average temperature (if more than ones sensor used, if not will read same as Local sensor)
   b. Local sensor at controller
   c. Remote 1 or Remote 2 if connected
4. <u>General Alarm Status:</u>
   a. Fire/Smoke, Clear or Alarm
   b. Low Temp, Clear or Alarm
   c. High Temp #1, Clear or Alarm
   d. High Temp #2, Clear or Alarm
   e. Controller Failure, Clear or Alarm

**SETPOINTS PAGE (Note: "Read" level authority can view this screen but cannot make any changes. "Admin" and "Write" authority can make changes)**

1. <u>General Setpoints</u>
   a. On initial installation and start-up all selectable characteristics are set to factory default settings.
   b. Each of these points has a drop-down menu for ease of use.
2. <u>Alarm Board Setpoints</u>
   a. Low temperature alarm setpoint
   b. High temperature alarm #1 setpoint
   c. High temperature alarm #2 setpoint
3. <u>System Overrides</u>
   a. System 1 Heating Override
   b. System 2 Heating Override
   c. Turn Power On to the System (Note: Cannot remotely turn the controller system Off)
   d. Lock/Unlock Controller
   e. Advance Lead to Lag Unit
   f. Comfort Mode
   g. Restore System Defaults
   h. Reset Controller. There are built-in routines to prevent the controller system from getting "locked up", but this also allows a manual remote reset as a backup before having a service call to the site.

**LOG OUT BUTTON**

1. Clicking this button will automatically log you off the controller remote access.
2. To log back in will require entering assigned IP address into your browser and entering valid User Name and Password.

**CONNECT TO NETWORK**

1. After initial set-up using laptop computer, disconnect computer cable from the Ethernet port and connect the CAT 5 or CAT 6 network cable.
2. Remote access is now available using the assigned IP address and valid User Name and Password (case sensitive).

## CB4000 COMMUNICATION BOARD

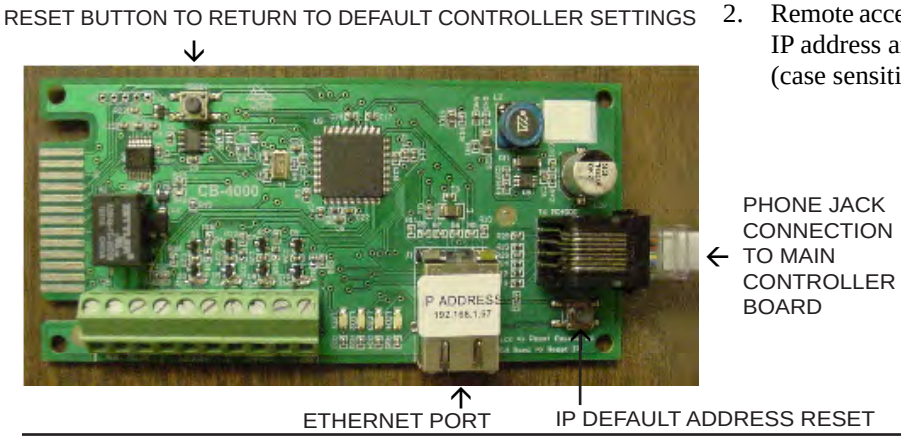

## CONTROLLER WIRING

The MD4000 can be used for controlling two (2) air conditioners with economizers.

## SECURITY (LOCKING) FEATURE

The MD4000 controller can be locked such that unauthorized persons cannot make any changes to temperature set points or any other selectable parameters of the controller system.

The ON/OFF and Comfort buttons remain fully active for their normal intent. The Advance/Change/Save button remains active for the Advance feature only, which allows the position of the lead and lag air conditioners to be swapped (reversed). The Program button remains partially active - allowing the review of temperature sensor(s) actual reading of temperature, and the current settings/choices that have been chosen. However, no changes can be made when the controller is locked, and if the change button is pressed when in the Program mode, the display will come up showing "Locd" instead of flashing the selectable choices for that parameter. The default (DEF) reset capability is also disabled when the controller is in locked mode.

Locking and Unlocking the MD4000 Controller:

1. Locking the controller requires using 3 buttons while the controller is in the normal operating (run) mode.

2. Press and hold the Advance/Change/Save button and the Up and Down arrow buttons simultaneously for 20 seconds until the display shows "Locd".

3. To unlock the controller, press the Change, Up and Down arrow buttons simultaneously for 20 seconds until the display reads "uLoc".

## GENERATOR RUN / ECONOMIZER SHUTDOWN FEATURE

If desired, the MD4000 controller can be signaled from a standby generator system to lockout (disable operation of the) lag air conditioning system and close economizers if active. This is sometimes mandated if the generator size is not sufficient to handle the building load (amperage) and that of both air conditioning systems.

A normally closed (NC) dry contact as part of generator controls is required. These contacts must open when the generator is started, and such action will signal the MD4000 controller to this condition and disable lag air conditioner run function and close economizers if active.

A wire jumper is factory-installed across the Generator Run / Economizer Shutdown terminals. To utilize the generator run feature, remove the jumper from Generator Run / Economizer Shutdown, and connect the generator normally closed (NC) contacts that will open-on-run generator condition to the Generator Run / Economizer Shutdown terminals.

## BACKUP DC POWER CONNECTION

There are input connections available for -24VDC or -48VDC (-20 to -56V) backup power connection. Making this connection will maintain microprocessor operation, front panel display, LED signaling, and alarm relay operation during periods of commercial power outages and when no standby generator is available. This circuit is protected by a replaceable .5A (500mA) 250V fuse.

**IMPORTANT:** *The shelter DC battery power must be connected to the controller and wired as shown in controller wiring diagrams.*

*The backup DC power connection is polarity sensitive. If polarity is reversed, the controller will not function on backup power, no display and no alarm functions will be evident.*

## TABLE 1
## HOOK-UP DIAGRAM SELECTION TABLE — REFERENCE FIGURE 1 SHOWN

| System Type | Model Series | MD4000-B Newer ECONWMT Economizer — No Communication Board | MD4000-BC Newer ECONWMT Economizer with CB4000 Communication Board |
|---|---|---|---|
| A/C with 1-Stage Compressor | H**A / H**L | 1 | 2 |

## FIGURE 1
## MD4000-B CONTROLLER CONNECTIONS
## 1-STAGE (H**A/H**L SERIES) AIR CONDITIONERS
## WITH (ECONWMT) ECONOMIZERS

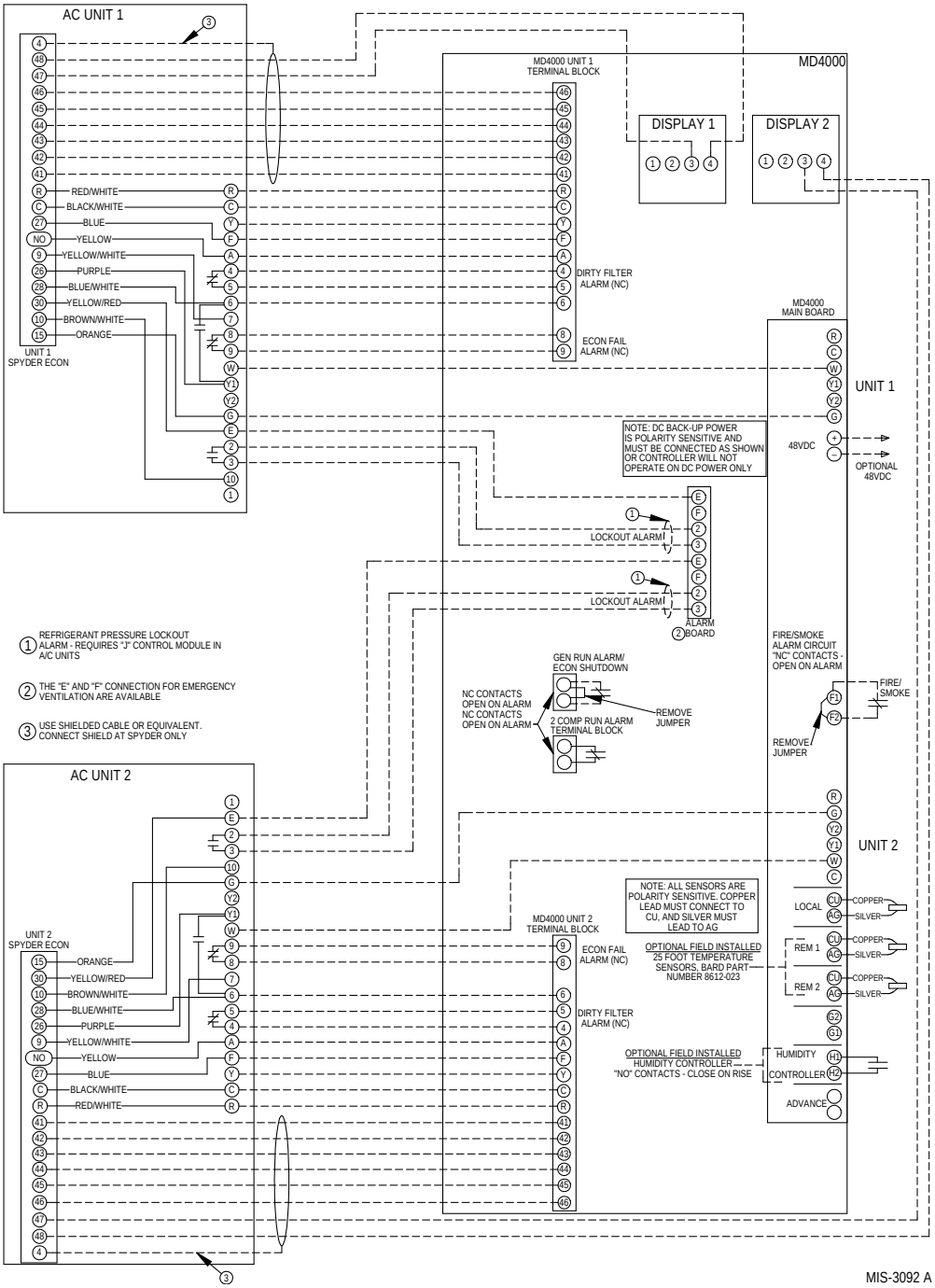

# FIGURE 2
# MD4000-BC CONTROLLER CONNECTIONS
# 1-STAGE (H**A/H**L SERIES) AIR CONDITIONERS
# WITH (ECONWMT) ECONOMIZERS
# AND WITH ALARM BOARD & CB4000 COMMUNICATION BOARD

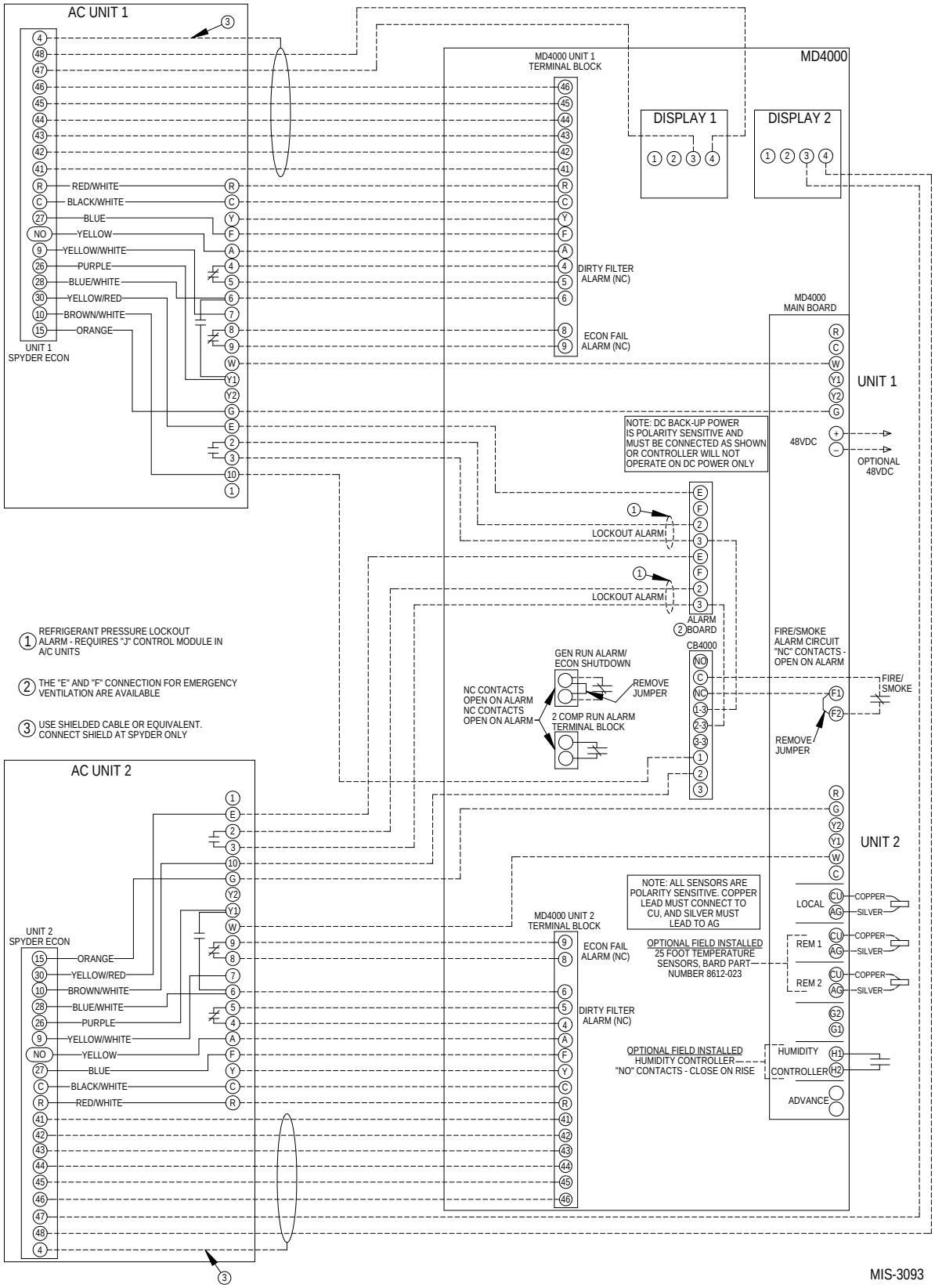

## ECONOMIZER FAILURE ALARM

Upon failure of either economizer to open on command or close on command, the Economizer Failure Alarm will open normally closed contacts to signal the failure. To utilize this feature, terminals 8 & 9 must be connected to the shelter alarm panel.

A normally closed economizer fail alarm is available on terminals 8 & 9 of the Unit 1 & 2 terminal blocks.

## DIRTY FILTER ALARM

A normally closed dirty filter alarm is available on terminals 4 & 5 of the Unit 1 & 2 terminal blocks.

## 2-COMPRESSOR RUN ALARM

If both compressors are running at the same time, the 2-Compressor Run Alarm will open indicating this condition.

***NOTE: The alarm LED display board is shipped uninstalled to protect it from possible damage during installation of the wiring to main controller board and/ or the alarm board. It is polarity sensitive and is keyed so it can only be installed in correct position.***

**NOTE: The LED display board can be replaced if needed independently of the alarm board. Bard part number is 8612-022.**

## ALARM WIRING

Alarm relays can be wired for NO (close on alarm) or NC (open on alarm) strategy.

Alarm relays can be used individually if there are enough available building alarm points, or can be arranged into smaller groups or even a single group so that all alarm capabilities can be utilized.

When multiple alarms are grouped together and issued as a single alarm, there will no off-site indication of which specific problem may have occurred, only that one of the alarms in the group has been triggered. The individual alarm problem will be shown on the LED display on the face of the controller.

**Note:** All alarm and output relays are Form C (SPDT) dry contacts rated 1A @ 24 VAC.

**Note:** All alarm relay outputs have 10-second delay in acutally issuing to protect against nuisance alarm signals.

The Power Loss 1, Power Loss 2 and controller alarm relays are all “reverse actuated”, which means they are continuously energized (the NO contact is closed) and switched to NC position upon alarm condition. Therefore, it is important to closely follow the alarm board connection diagrams that follow.

Any alarm feature that is not desired can simply be ignored (not connected).

**ALARM LED DISPLAY BOARD**

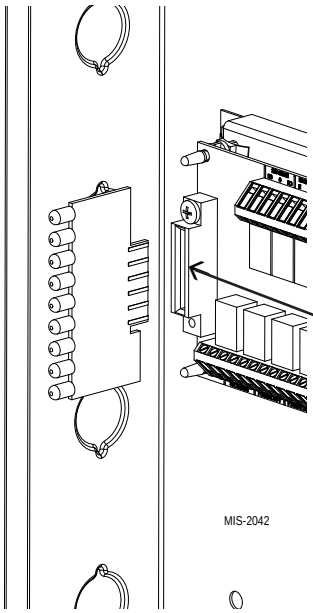


***NOTE:*** *The LED display board is polarized and will only fit in one direction as shown. It must be fully inserted in order for the controller to function properly.*

## 2ND STAGE COOLING ALARM

This alarm output is available for use if desired. It is important to note that in some installations, due to A/C system sizing and internal heat load, that the secondary (lag) air conditioning unit may be called upon to assist the lead air conditioner some of the time. If this is the case, or possibly when additional heat load is added, using the 2nd stage cooling alarm will cause nuisance alarm conditions.

**Note:** For units with 2-stage compressors, the dual stage cooling alarm activates on cooling Stage 3 initiation. Menu Step 23, CoPr, must be set to "2" for this to occur, otherwise alarm will activate on cooling call Stage 2 causing nuisance alarm.

For installations where it is known that there is 100% redundancy (one air conditioning unit can handle 100% of the load 100% of the time) use of the 2nd Stage Cooling Alarm is a method to issue an alarm signal that the lead air conditioner is down (or not delivering full capacity) and that the lag air conditioner is now operating.

## REFRIGERANT PRESSURE ALARMS

Air conditioners with "J" control module are equipped with an alarm relay that is activated upon high or low refrigerant pressure lockout conditions. Connecting terminals 2 and 3 from the air conditioner 24V terminal block to the matching terminals 2 and 3 on the alarm board will allow these alarms to function.

## SPYDER ECONOMIZER DISPLAYS

The two (2) displays on the front of the MD4000 are for remotely monitoring and programming the 100% fresh air Spyder economizers in the units. See Instruction Manual 2100-576 for details.

## EMERGENCY VENTILATION SEQUENCE

For units with economizers, there are two (2) emergency ventilation sequences designed into the controller. Both require the -B alarm board and connection of terminals E and F from the air conditioner 24V terminal block to the matching terminals on the alarm board.

**Note:** The E and F wiring connections at the 24V terminal block in the A/C units are different for older style EIFM economizers than for newer style ECONWMT economizers. Refer to the appropriate Controller Connection diagrams - See Table 1.

Sequence one requires a refrigerant pressure alarm, coupled with high temperature alarm condition No. 1 (HAL 1 set point). If both of these conditions occur, the economizer in the air conditioner that issued the refrigerant alarm will drive open to ventilate the building.

Sequence two (HAL 2 set point) is activated by high temperature alarm No. 2, and will initiate even without a refrigerant pressure alarm signal. Both economizers will be activated to provide emergency ventilation. This strategy help protect against building overheating if air conditioner(s) are inoperative for non-pressure related reasons (bad compressor, contactor, run capacitor, etc.).

**FIGURE 3**
**ALARM BOARD CONNECTIONS**
**FOR NORMALLY CLOSED "NC" OPEN-ON-ALARM STRATEGY**

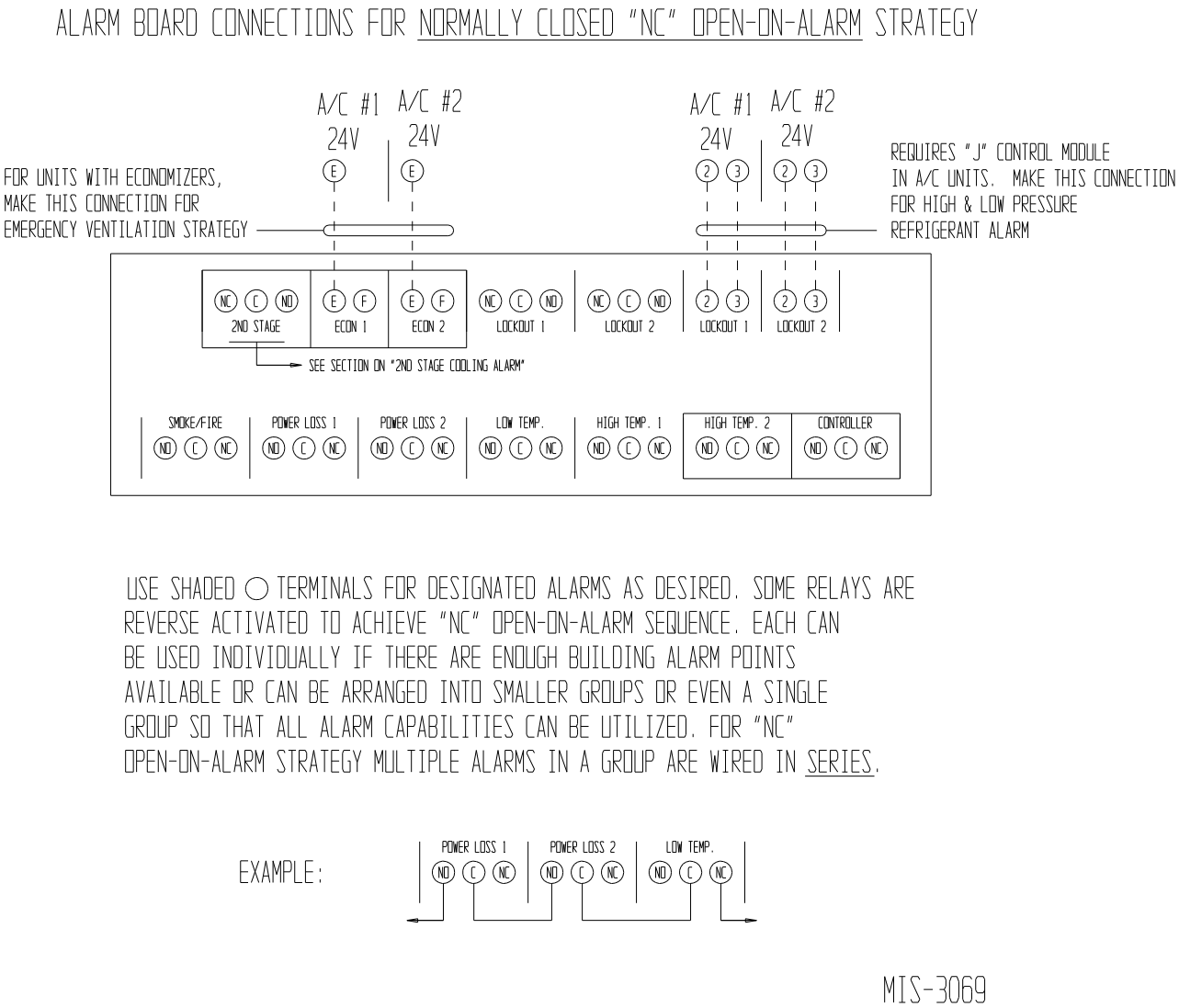


**IMPORTANT!** *LED display board is shipped loose to protect it from possible damage during installation of the wiring to main controller board and/or the alarm board. It is polarity sensitive and is keyed so it can only be installed in correct position.*

**FIGURE 4**
**ALARM BOARD CONNECTIONS**
**FOR NORMALLY OPEN "NO" CLOSE-ON-ALARM STRATEGY**

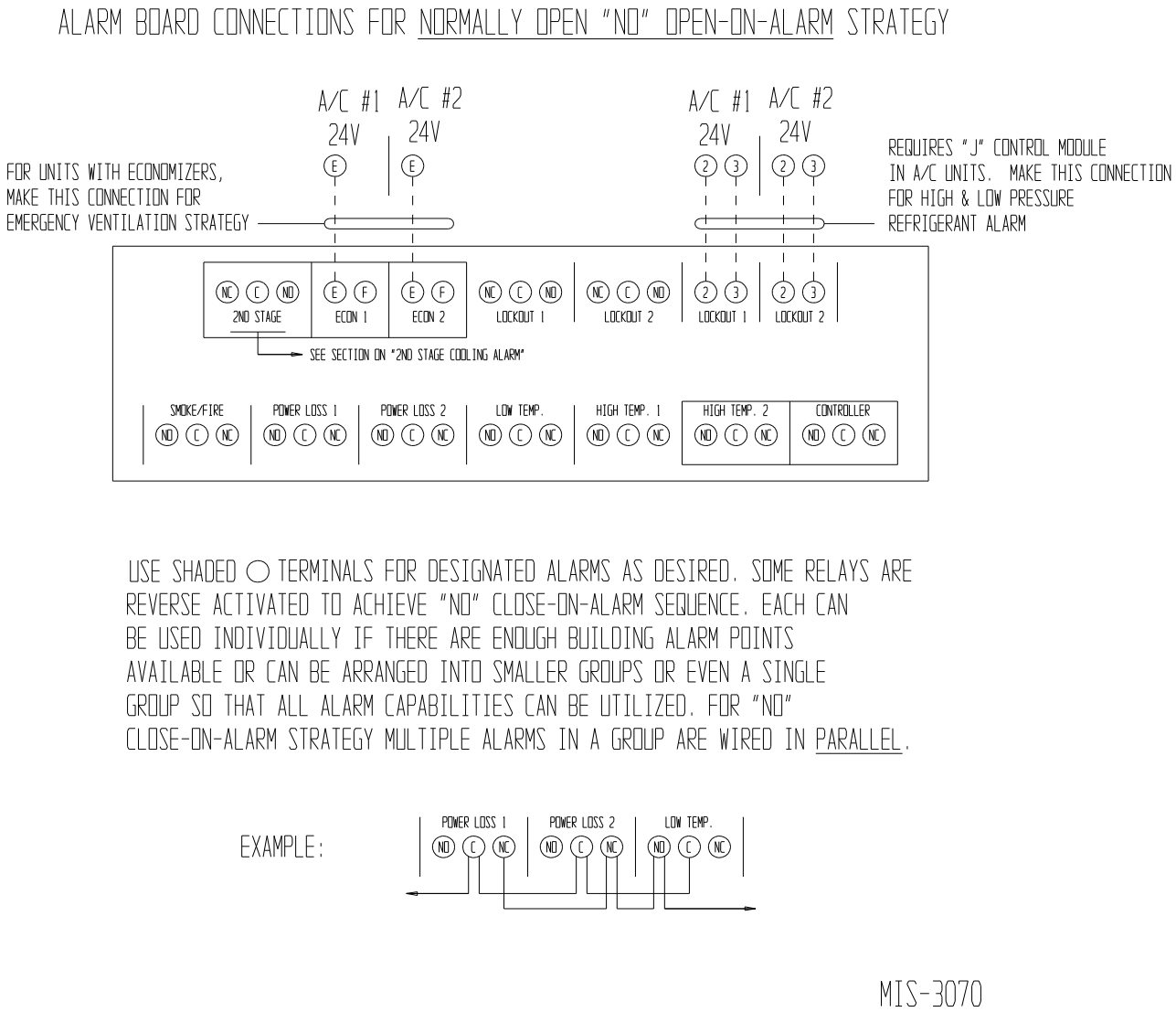


**IMPORTANT!** *LED display board is shipped loose to protect it from possible damage during installation of the wiring to main controller board and/or the alarm board. It is polarity sensitive and is keyed so it can only be installed in correct position.*

## PROGRAMMING INSTRUCTIONS

To swap lead and lag unit positions, press the ADVANCE button.

To enter the Program mode, press the PROGRAM button and release it when the message PROG appears on the display. When in Program mode, the DOWN and UP arrows are used to scroll through the programming steps.

A FLASHING display means that the function or choice is “SET”, and the display will alternate between the step function and setting.

To change the setting of any step, press the CHANGE button and the display will stop flashing, allowing change to the setting by using the DOWN or UP arrows. When desired setting is reached, press the SAVE button, and proceed as desired. When done with programming changes, press the PROGRAM button until display stops flashing and room temperature display is shown. If no buttons are pushed within thirty (30) seconds, the controller will automatically revert back to “RUN” mode.

To reset all controller settings to the factory default values, press the PROGRAM button for 10 seconds until display reads dEF.

*NOTE: When the controller has the security locking feature enabled, no changes to any selectable features can be made, and the default reset feature is also locked out. All of the programmable features/settings can be reviewed using the Program button and Up or Down arrows, but any attempt to change settings using the Change button will result is display showing “Locd” indicating controller is locked. See section on Security (Locking) Feature.*

**See next page for Programmable Features, Default Settings and MD4000 front panel label layout.**

***NOTE:*** *When using the controller buttons to review settings or making changes, **push and hold** the buttons for approximately 1 second or until the display changes.*

*Quickly pushing or jabbing the buttons will not allow the controller to respond.*

Bard SINCE 1914
CLIMATE CONTROL SOLUTIONS

# MD4000 Series

## Solid State Dual Unit Lead/Lag Controller

See displays above — Cooling

1st Stage, 2nd Stage, 3rd Stage, 4th Stage — Heating

Digital Display

Lead Unit — Unit #1, Unit #2

Dehumid. Operation

On / Off

Program

Advance / Change / Save

Comfort

## Alarms

*Alarm boards are optional and can be factory or field installed. See inside of controller for any alarm functions.*

AB3000-B Alarm Board Functions

- Power Loss Sys. 1
- Power Loss Sys. 2
- Refrig. Alarm Sys. 1
- Refrig. Alarm Sys. 2
- Fire/Smoke Alarm
- Low Temp. Alarm
- High Temp. Alarm 1
- High Temp. Alarm 2
- Lead/Lag Controller Failure Alarm

AB3000-A Alarm Board Functions

## Operating Instructions

1. To swap lead and lag units press "ADVANCE".
2. To enter the Program mode press the "Program" button and release it when "Pro9" appears. Use "DOWN" or "UP" arrows to scroll through menu.
3. A "Flashing" display means that the function or choice is "Set", and the display will alternate between the step function and setting.
4. To change the setting of any step press the "Change" button and the display will stop flashing, allowing change to the setting by using the "Down" or "Up" arrows. When desired setting is reached press the "Save" button, and proceed as desired.
5. When done programming press the "Program" button until display stops flashing and room temperature is shown. If no buttons are pushed within 30-seconds the controller will automatically revert back to "Run" mode.

## Comfort Mode

Press "Comfort" button once to reset to 68F/20C heating for 1-hour. Display will flash during override period. Press 2nd-time to cancel during override if desired, or controller will automatically revert to selected SP after 1-hour.

## Program Menu

NOTE: Push and hold Up or Down arrows for 1-second until display blanks to move between steps.

| | | |
|---|---|---|
| 1 | LSEn | Temperature at local (main) Sensor |
| 2 | r1 | Temperature at Remote 1 sensor location* |
| 3 | r2 | Temperature at Remote 2 sensor location* |
| 4 | SP | Cooling setpoint temperature (65 to 90F or 18.3 to 32.2C - Default is 77F/25C) |
| 5 | db | Deadband between cooling and heating setpoint (2 to 40F or 1.1 to 22.2C - Default is 27F/15C) |
| 6 | cFAn | Continuous blower operation (None, Lead, Both - Default is LEAD) |
| 7 | dEG | Degree display (F or C - Default is F) |
| 8 | ALT | N/A - See Operating Manual |
| 9 | LLCO | Lead-Lag changeover time (Days) (1 to 30 days, or 0 for disabled - Default is 7) |
| 10 | HP | N/A - See Operating Manual |
| 11 | CbdS | Unit 1 and 2 blowers automatically both run if delta T>5F between any 2 connected sensors (Yes or No - Default is Yes) |
| 12 | OFdE | N/A - See Operating Manual |
| 13 | crun | N/A - See Operating Manual |
| 14 | LoAL | Low temperature alarm setpoint (28 to 65F or 21.1 to 48.8C - Default is 45F/7.2C) |
| 15 | HAL1 | High temperature alarm Level 1 setpoint (70F to 120F or 21.1 to 48.8C - Default is 90F/32.2C) |
| 16 | HAL2 | High temperature alarm Level 2 setpoint (70F to 120F or 21.1 to 49C - Default is 95F/35C) |
| 17 | 1Sd2 | N/A - See Operating Manual |
| 18 | 1Sd3 | N/A - See Operating Manual |
| 19 | 1Sd4 | N/A - See Operating Manual |
| 20 | CSon | N/A - See Operating Manual |
| 21 | CSoF | N/A - See Operating Manual |
| 22 | HSoo | All Heating stages are equal -/+ On & Off differential (-1/+1 or -2/+2 - Default is -2/+2) |
| 23 | CoPr | N/A - See Operating Manual |
| 24 | Locd | Controller is Locked. Consult building authority for further instructions. |

* r1 and r2 will display temperature only if optional remote sensors are installed. If sensors are not installed these are omitted in the display sequence. If r1 and/or r2 sensor installed the MC4000 will control to the "average" of the connected sensors. Consult installation instructions for additional details.

7961-762

**FIGURE 5**
**PARTS LIST DESCRIPTION DIAGRAM**

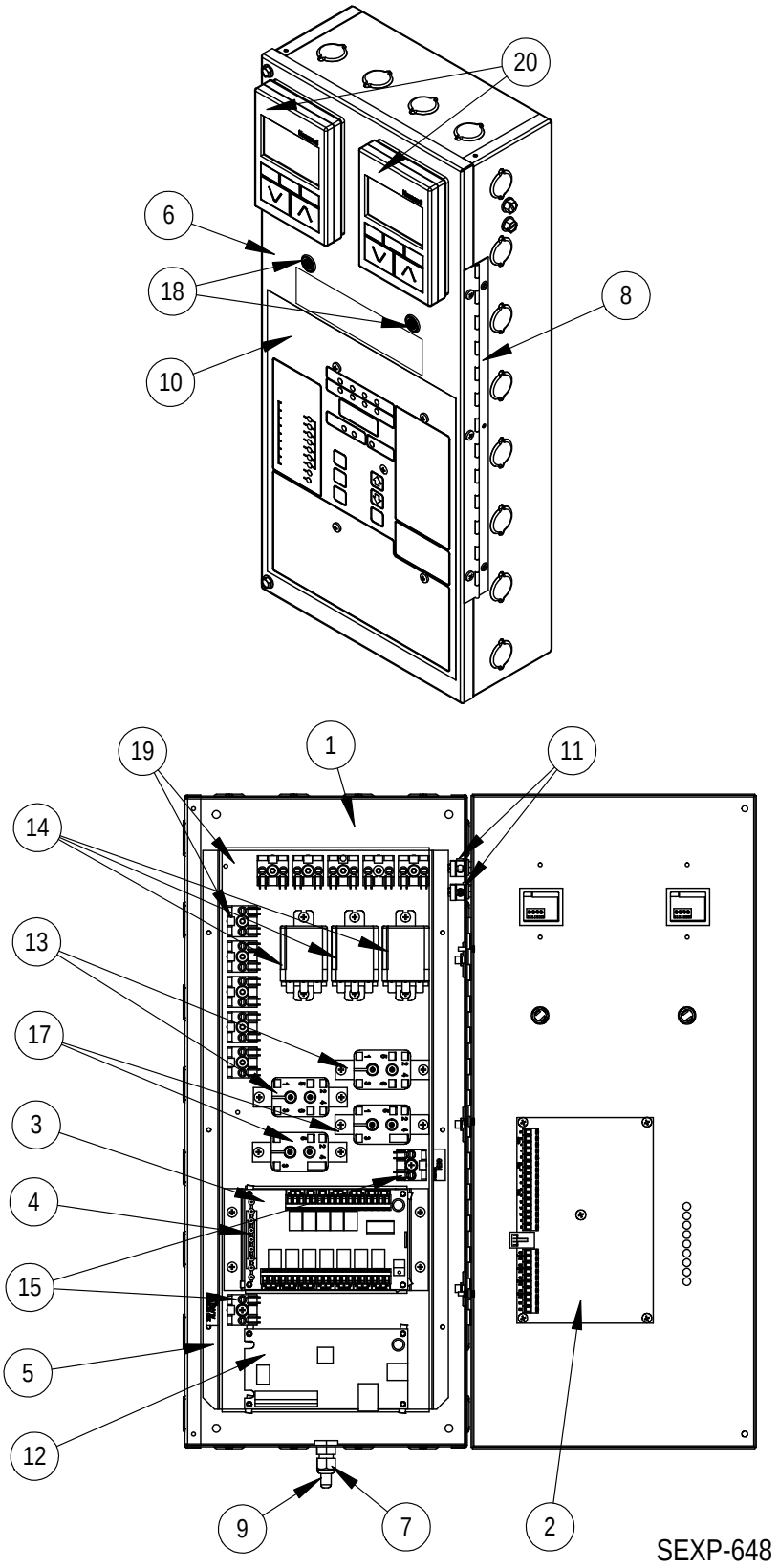

## *Parts List*

| Dwg. No. | Part No. | Description | MD4000-B | MD4000-BC | AB3000-B | CB4000 |
|---|---|---|---|---|---|---|
| 1 | 127-423-4 | Control Box | X | X | | |
| 2 | 8612-038 | Controller Board | X | X | | |
| 3 | 8612-021 | Alarm Board B | X | X | X | |
| 4 | 8612-022 | Alarm Display | X | X | X | |
| 5 | 113-456-4 | Support Bracket | X | X | | |
| 6 | 152-515-4 | Control Box Door | X | X | | |
| 7 | 8611-099 | LTF Fitting | X | X | | |
| 8 | 5400-002 | Hinge | X | X | | |
| 9 | 8612-023 | Sensor | X | X | | |
| 10 | 7961-762 | Label/Keypad | X | X | | |
| 11 | 8611-006 | Ground Lug | 2 | 2 | | |
| 12 | 8612-035 | Communication Board | | X | | X |
| 13 | 8201-015 | Relay | 2 | 2 | | |
| 14 | 8201-071 | Relay | 3 | 3 | | |
| 15 | 8607-030 | Terminal Block | 2 | 2 | | |
| 16 | 113-461-4 | Alarm Bracket | 1 | 1 | | |
| 17 | 8201-062 | Relay | 2 | 2 | | |
| 18 | 8611-094 | Light | 2 | 2 | | |
| 19 | 8607-033 | Terminal Block | 2 | 2 | | |
| 20 | 8301-043 | Display | 2 | 2 | | |