INSTALLATION INSTRUCTIONS

WALL MOUNTED
PACKAGE HEAT PUMPS

MODELS

C24H1
C30H1
C36H1
C42H1
C48H1
C60H1

Bard Manufacturing Company, Inc.
Bryan, Ohio 43506

Since 1914...Moving ahead just as planned.

Climate Control Solutions

Manual :	2100-586C
Supersedes:	2100-586B
File:	Tab 17
Date:	08-13-14

CONTENTS

Getting Other Information and Publications 3

Wall Mount General Information
Wall Mount Model Nomenclature 4
Shipping Damage 4
General 4
Duct Work 5
Filters 5
Fresh Air Intake 5
Condensate Drain 5

Installation Instructions
Wall Mounting Information 6
Mounting the Unit 6
Placement 6
Clearances Required 6
Minimum Clearances 6
Wiring – Main Power 13
Wiring – Low Voltage Wiring 13
Optional Outdoor T-Stat Applications 13

Start Up
General 14
Topping Off System Charge 14
Safety Practices 14
Important Installer Note 15
High & Low Pressure Switch 15
Three Phase Scroll Compressor 15
Phase Monitor 15
Service Hints 15
Sequence of Operation 16
Pressure Service Ports 16
Defrost Cycle 16

Troubleshooting
Solid State Heat Pump Control 18
Checking Temperature Sensor 19
Fan Blade Setting Dimensions 20
Removal of Fan Shroud 20
R-410A Refrigerant Charge 20
Troubleshooting GE ECM Motors 24
Troubleshooting GE ECM Motors 25

Figures
Figure 1 Fresh Air Damper Assembly 5
Figure 2 Unit Dimensions 7
Figure 3A Mounting Instructions C24H, C30H 8
Figure 3B Mounting Instructions C36, 42, 48, 60H 9
Figure 4 Electric Heat Clearance 10
Figure 5 Wall Mounting Instructions 11
Figure 6 Wall Mounting Instructions 11
Figure 7 Common Wall Mounting Installations 12
Figure 8 Defrost Control Board 17
Figure 9 Fan Blade Setting 20
Figure 10 Control Disassembly 25
Figure 11 Winding Test 25
Figure 12 Drip Loop 25

Tables
Table 1 Clearances Required 6
Table 2 Min. Clearances Required 6
Table 3 Troubleshooting 18
Table Temperature F vs. Resistance 19
Table 4 Fan Blade Dimension 20
Table 5A Cooling Pressure 21
Table 5B Heating Pressure 21
Table 6 Electrical Specifications C**H 22
Table 7 Indoor Blower Performance 23

GETTING OTHER INFORMATION AND PUBLICATIONS

These publications can help you install the air conditioner or heat pump. You can usually find these at your local library or purchase them directly from the publisher. Be sure to consult current edition of each standard.

National Electrical Code ..... ANSI/NFPA 70

Standard for the Installation ..... ANSI/NFPA 90A
of Air Conditioning and Ventilating Systems

Standard for Warm Air ..... ANSI/NFPA 90B
Heating and Air Conditioning Systems

Load Calculation for ..... ACCA Manual J
Residential Winter and Summer Air Conditioning

Duct Design for Residential ..... ACCA Manual D
Winter and Summer Air Conditioning and Equipment Selection

FOR MORE INFORMATION, CONTACT THESE PUBLISHERS:

ACCA **Air Conditioning Contractors of America**
1712 New Hampshire Ave. N.W.
Washington, DC 20009
Telephone: (202) 483-9370
Fax: (202) 234-4721

ANSI **American National Standards Institute**
11 West Street, 13th Floor
New York, NY 10036
Telephone: (212) 642-4900
Fax: (212) 302-1286

ASHRAE **American Society of Heating, Refrigeration and Air Conditioning Engineers, Inc.**
1791 Tullie Circle, N.E.
Atlanta, GA 30329-2305
Telephone: (404) 636-8400
Fax: (404) 321-5478

NFPA **National Fire Protection Association**
Batterymarch Park
P.O. Box 9101
Quincy, MA 02269-9901
Telephone: (800) 344-3555
Fax: (617) 984-7057

WALL MOUNT GENERAL INFORMATION

HEAT PUMP WALL MOUNT MODEL NOMENCLATURE

C 36 H 1 – A 05 V P X X X X

MODEL NUMBER

CAPACITY
24 - 2 Ton
30 - 2½ Ton
36 - 3 Ton
42 - 3½ Ton
48 - 4 Ton
60 - 5 Ton

H - Heat Pump

REVISIONS

VOLTS & PHASE
A - 230/208/60/1
B - 230/208/60/3
C - 460/60/3

KW①
0C - 0KW
0Z - 0KW
04 - 4KW
05 - 5KW
06 - 6KW
F8 - 8KW
S8 - 8KW
09 - 9KW
10 -10KW
15 -15KW
20 -20KW

VENTILATION OPTIONS
B - Blank-off Plate
V - Commercial Ventilator - Mod. Spring Return w/Exhaust
S - Economizer (Internal) - Fully Modulating with Exhaust
R - Energy Recovery Ventilator - Motorized with Exhaust (See Spec. Sheet S3459)

FILTER OPTIONS
X - 1-Inch Fiberglass (MERV 2)
M - 2-Inch Pleated (MERV 11)
P - 2-Inch Pleated (MERV 8)

COLOR OPTIONS
X - Beige
1 - White
4 - Buckeye Gray
5 - Desert Brown
8 - Dark Bronze
S - Stainless Steel

SUPPLY AIR OUTLET
X - Front (Standard)

COIL OPTIONS
X - Standard Hydrophilic Fin Indoor Coil & Uncoated Aluminum Outdoor Coil
1 - Phenolic Coated Indoor Coil
2 - Phenolic Coated Outdoor Coil
3 - Phenolic Coated ID & OD Coil

CONTROL MODULES
(See Spec. Sheet S3459)

Note ① All 230/208V units with or without electric heat have circuit breaker. 0C is for 460V circuit breaker & 0KW. No 460V electric heat options w/circuit breaker available. 460V -0Z and all 460V KW options are with Rotary Disconnect. See available heater options by unit model number.

⚠ WARNING

Falling or tipping the unit could cause injury or death! Use two (2) people or a machine to move the unit.

SHIPPING DAMAGE

Upon receipt of equipment, the carton should be checked for external signs of shipping damage. If damage is found, the receiving party must contact the last carrier immediately, preferably in writing, requesting inspection by the carrier's agent.

GENERAL

The equipment covered in this manual is to be installed by trained, experienced service and installation technicians.

The refrigerant system is completely assembled and charged. All internal wiring is complete.

The unit is designed for use with or without duct work. Flanges are provided for attaching the supply and return ducts.

These instructions explain the recommended method to install the air cooled self-contained unit and the electrical wiring connections to the unit.

These instructions and any instructions packaged with any separate equipment required to make up the entire air conditioning system should be carefully read before beginning the installation. Note particularly "Starting Procedure" and any tags and/or labels attached to the equipment.

While these instructions are intended as a general recommended guide, they do not supersede any national and/or local codes in any way. Authorities having jurisdiction should be consulted before the installation is made. See Page 3 for information on codes and standards.

Size of unit for a proposed installation should be based on heat loss/gain calculation made according to methods of Air Conditioning Contractors of America (ACCA). The air duct should be installed in accordance with the Standards of the National Fire Protection Association for the Installation of Air Conditioning and Ventilating Systems of Other Than Residence Type, NFPA No. 90A, and Residence Type Warm Air Heating and Air Conditioning Systems, NFPA No. 90B. Where local regulations are at a variance with instructions, installer should adhere to local codes.

DUCT WORK

All duct work, supply and return, must be properly sized for the design airflow requirement of the equipment. Air Conditioning Contractors of America (ACCA) is an excellent guide to proper sizing. All duct work or portions thereof not in the conditioned space should be properly insulated in order to both conserve energy and prevent condensation or moisture damage.

Design the duct work according to methods given by the Air Conditioning Contractors of America (ACCA). When duct runs through unheated spaces, it should be insulated with a minimum of one inch of insulation. Use insulation with a vapor barrier on the outside of the insulation. Flexible joints should be used to connect the duct work to the equipment in order to keep the noise transmission to a minimum.

A 1/4 inch clearance to combustible material for the first three feet of duct attached to the outlet air frame is required. See Wall Mounting Instructions and Figures 3A, 3B and 4 for further details.

Ducts through the walls must be insulated and all joints taped or sealed to prevent air or moisture entering the wall cavity.

Some installations may not require any return air duct. A metallic return air grille is required with installations not requiring a return air duct. The spacing between louvers on the grille shall not be larger than 5/8 inch.

Any grille that meets with 5/8 inch louver criteria may be used. It is recommended that Bard Return Air Grille Kit RG2 through RG5 or RFG2 through RFG5 be installed when no return duct is used. Contact distributor or factory for ordering information. If using a return air filter grille, filters must be of sufficient size to allow a maximum velocity of 400 fpm.

NOTE: If no return air duct is used, applicable installation codes may limit this cabinet to installation only in a single story structure.

FILTERS

A 1-inch throwaway filter is standard with each unit. The filter slides into position making it easy to service. This filter can be serviced from the outside by removing the filter access panel. 2-inch pleated filters are also available as optional accessories. The internal filter brackets are adjustable to accommodate the 2-inch filter by bending two (2) tabs down on each side of the filter support bracket.

FRESH AIR INTAKE

All units are built with fresh air inlet slots punched in the service door.

If the unit is equipped with a fresh air damper assembly, the assembly is shipped already attached to the unit. The damper blade is locked in the closed position. To allow the damper to operate, the maximum and minimum blade position stops must be installed. See Figure 1.

All capacity, efficiency and cost of operation information is based upon the fresh air blank-off plate in place and is recommended for maximum energy efficiency.

The blank-off plate is available upon request from the factory and is installed in place of the fresh air damper shipped with each unit.

CONDENSATE DRAIN

A plastic drain hose extends from the drain pan at the top of the unit down to the unit base. There are openings in the unit base for the drain hose to pass through. In the event the drain hose is connected to a drain system of some type, it must be an open or vented type system to assure proper drainage.

FIGURE 1
FRESH AIR DAMPER

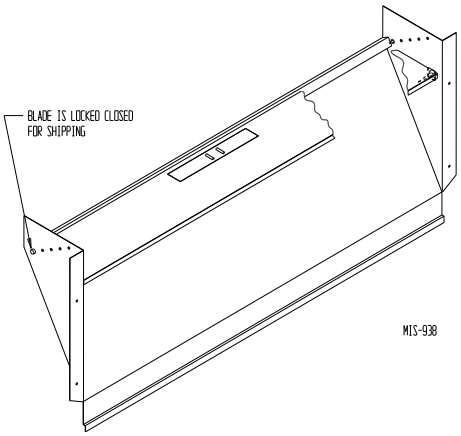

⚠ WARNING

Failure to bolt the unit to the wall could result in the unit falling, causing injury or death! Follow all mounting instructions.

⚠ WARNING

Failure to provide the 1/4 inch clearance between the supply duct and a combustible surface for the first 3 feet of duct can result in fire causing damage, injury or death.

WALL MOUNTING INFORMATION

1. Two holes for the supply and return air openings must be cut through the wall as shown in Figure 3.
2. On wood frame walls, the wall construction must be strong and rigid enough to carry the weight of the unit without transmitting any unit vibration.
3. Concrete block walls must be thoroughly inspected to ensure that they are capable of carrying the weight of the installed unit.

MOUNTING THE UNIT

1. These units are secured by wall mounting brackets which secure the unit to the outside wall surface at both sides. A bottom mounting bracket, attached to skid for shipping, is provided for ease of installation, but is not required.
2. The unit itself is suitable for 0 inch clearance, but the supply air duct flange and the first 3 feet of supply air duct require a minimum of 1/4 inch clearance to combustible material. However, it is generally recommended that a 1-inch clearance is used for ease of installation and maintaining the required clearance to combustible material. See Figure 3 for details on opening sizes.
3. Locate and mark lag bolt locations and bottom mounting bracket location. See Figures 3A & 3B.
4. Mount bottom mounting bracket.
5. Hook top rain flashing, attached to front - right of supply flange for shipping, under back bend of top.
6. Position unit in opening and secure with 5/16 lag bolts; use 7/8 inch diameter flat washers on the lag bolts.
7. Secure rain flashing to wall and caulk across entire length of top. See Figures 3A & 3B.
8. For additional mounting rigidity, the return air and supply air frames or collars can be drilled and screwed or welded to the structural wall itself (depending upon wall construction). Be sure to observe required clearance if combustible wall.

PLACEMENT

1. On side-by-side installations, maintain a minimum of 20 inches clearance on right side to allow access to control panel and heat strips, and to allow proper airflow to the outdoor coil. Additional clearance may be required to meet local or national codes.
2. Care should be taken to ensure that the recirculation and obstruction of condenser discharge air does not occur. Recirculation of condenser discharge air can be from either a single unit or multiple units. Any object such as shrubbery, a building or a large object can cause obstructions to the condenser discharge air. Recirculation or reduced airflow caused by obstructions will result in reduced capacity, possible unit pressure safety lockouts and reduced unit service life.

   Units with a draw through condenser, such as the C**H 11 EER, it is recommended there be a minimum distance of 15 feet between the front of the unit and any barrier to airflow.

REQUIRED STEPS AFTER FINAL PLACEMENT (C48H & C60H UNITS ONLY)

The compressor is secured to the unit base for shipping. Although unit will perform as designed with the compressor secured in place, there may be noticeable additional noise and vibration. To obtain the lowest noise and vibration levels, remove the compressor

Clearances Required for Service Access and Adequate Condenser Airflow

MODELS	LEFT SIDE	RIGHT SIDE
C24H, C30H	36"	36"
C36H, C42H, C48H, C60H	36"	36"

Minimum Clearances Required to Combustible Materials

MODELS	SUPPLY AIR DUCT FIRST THREE FEET	CABINET
C24H, C30H	1/4"	0"
C36H, C42H, C48H, C60H	1/4"	0"

shipping brackets after the unit is in its final operating location.

Remove the side grille to gain access to the compressor shipping brackets. The brackets are located on the compressor double isolation base at the front and rear of the compressor. The brackets are secured to the unit base with two (2) screws, and secured to the isolation plate with a 1/4" nut. Remove and dispose of the two (2) screws and brackets. Re-install the 1/4" nut once bracket is removed.

FIGURE 2

Dimensions of Basic Unit for Architectural & Installation Requirements (Nominal)

MODEL	WIDTH (W)	DEPTH (D)	HEIGHT (H)	SUPPLY		RETURN																
				A	B	C	B	E	F	G	I	J	K	L	M	N	O	P	Q	R	S	T
C24H1 C30H1	38.200	17.125	70.563	7.88	27.88	13.88	27.88	40.00	10.88	25.75	17.93	26.75	28.75	29.25	27.00	2.63	39.13	22.75	9.14	5.00	12.00	5.00
C36H1 C42H1	42.075	22.432	84.875	9.88	29.88	15.88	29.88	43.88	13.56	31.66	30.00	32.68	26.94	34.69	32.43	3.37	43.00	23.88	10.00	1.44	16.00	1.88
C48H1 C60H1	42.075	22.432	93.000	9.88	29.88	15.88	29.88	43.88	13.56	37.00	30.00	40.81	35.06	42.81	40.56	3.37	43.00	31.00	10.00	1.44	16.00	10.00

All dimensions are in inches. Dimensional drawings are not to scale.

CH**
RIGHT UNIT

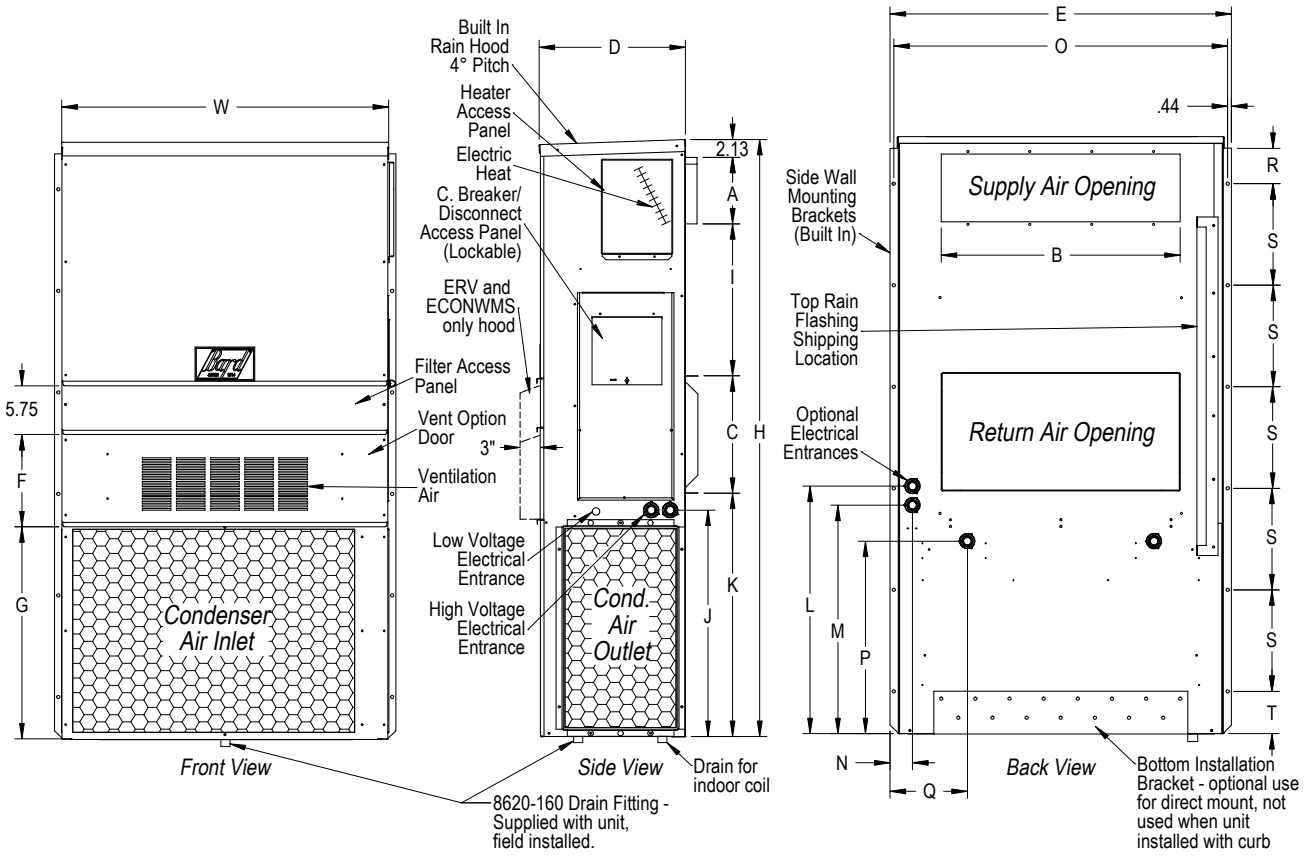

FIGURE 3A
C24H, C30H
MOUNTING INSTRUCTIONS

	A	B	C	D	E
REQUIRED DIMENSIONS TO MAINTAIN 1/4" MIN. CLEARANCE FROM COMBUSTIBLE MATERIALS	28 1/2	8 1/2	5 1/4	3 13/16	17 5/8
REQUIRED DIMENSIONS TO MAINTAIN RECOMMENDED 1" CLEARANCE FROM COMBUSTIBLE MATERIALS	30	10	4 1/2	4 9/16	16 7/8

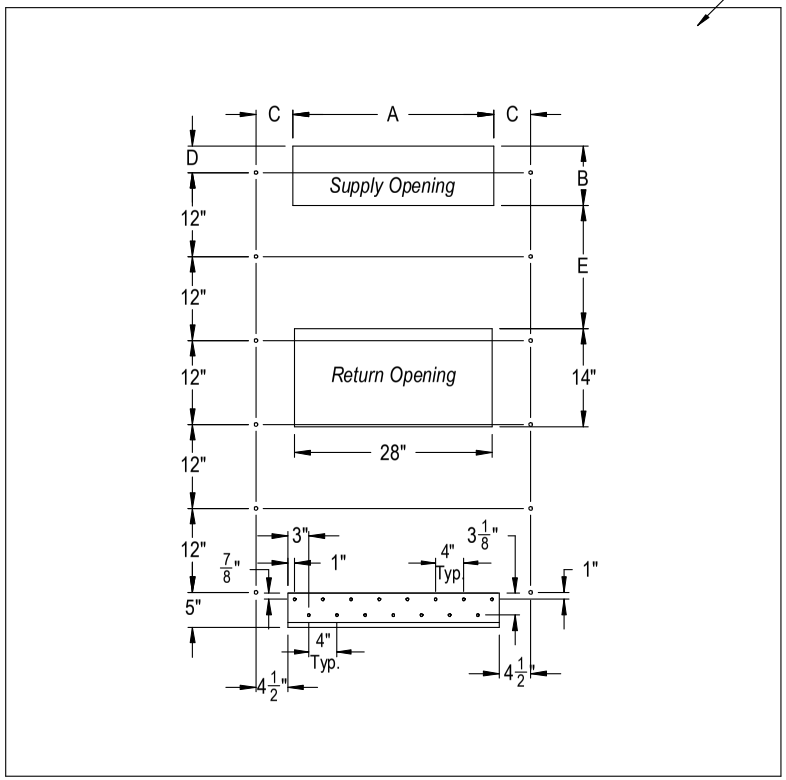

Wall Opening and Hole Location View

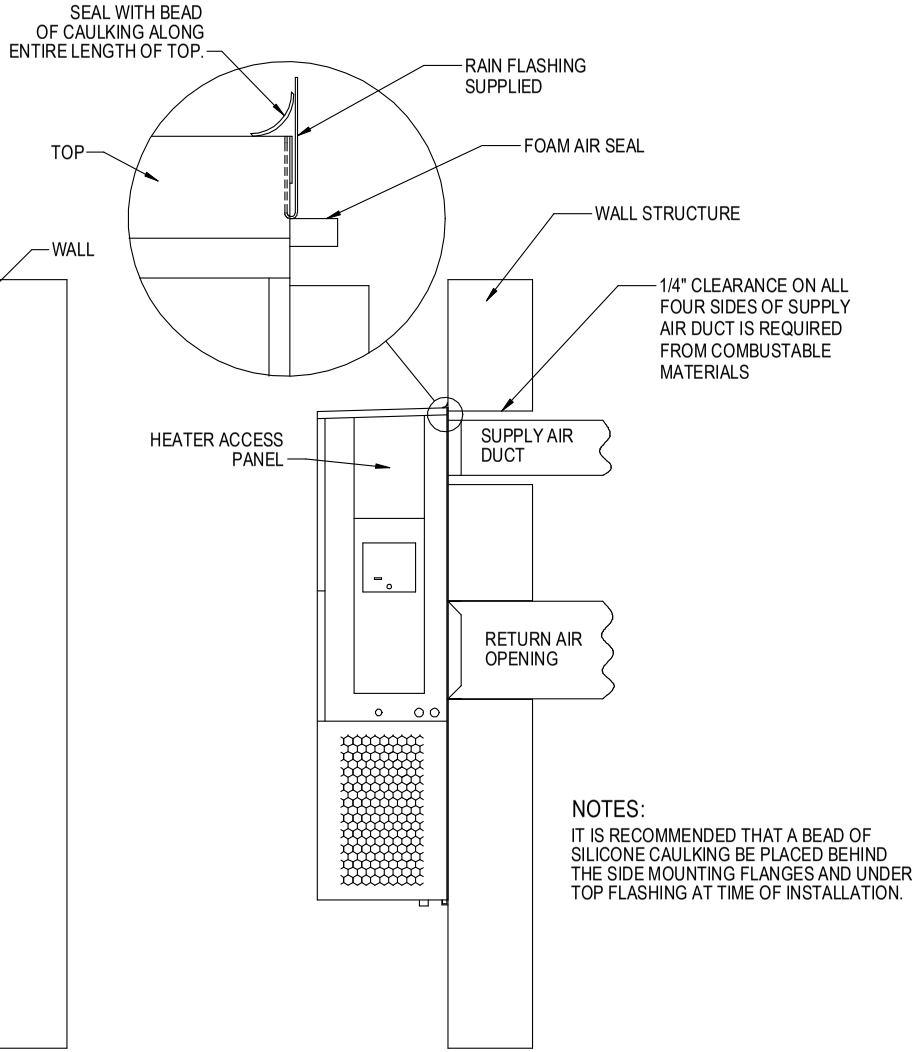

NOTES:

IT IS RECOMMENDED THAT A BEAD OF SILICONE CAULKING BE PLACED BEHIND THE SIDE MOUNTING FLANGES AND UNDER TOP FLASHING AT TIME OF INSTALLATION.

Right Side View

FIGURE 3B
C36H, C42H, C48H, C60H
MOUNTING INSTRUCTIONS

	A	B	C	D	E
REQUIRED DIMENSIONS TO MAINTAIN 1/4" MIN. CLEARANCE FROM COMBUSTIBLE MATERIALS	30 1/2	10 1/2	6 1/4	1 1/4	29 3/4
REQUIRED DIMENSIONS TO MAINTAIN RECOMMENDED 1" CLEARANCE FROM COMBUSTIBLE MATERIALS	32	12	5 1/2	2	29

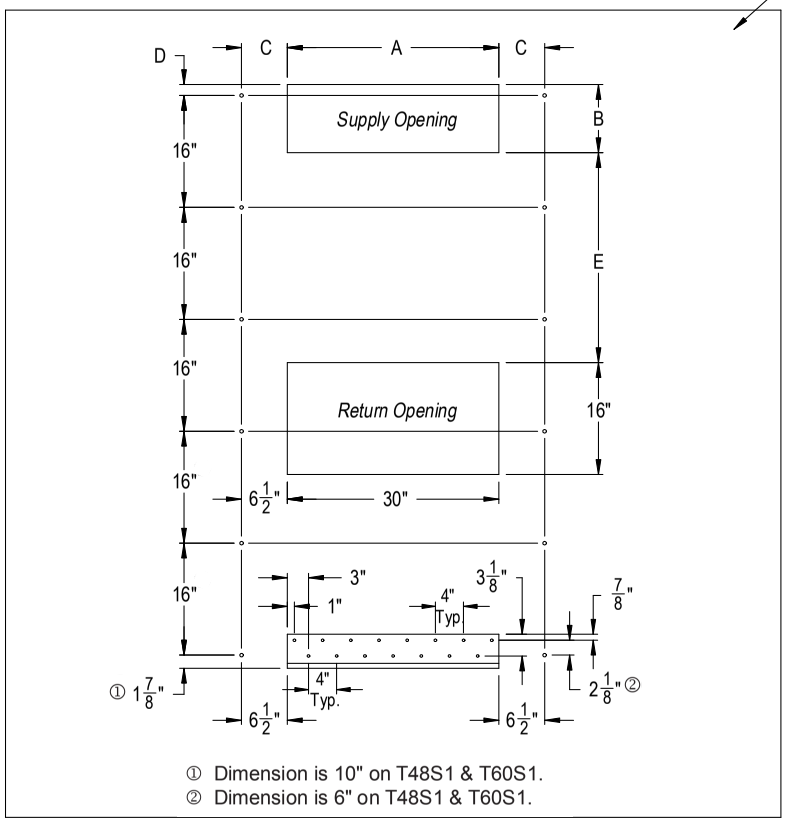

① Dimension is 10" on T48S1 & T60S1.
② Dimension is 6" on T48S1 & T60S1.

Wall Opening and Hole Location View

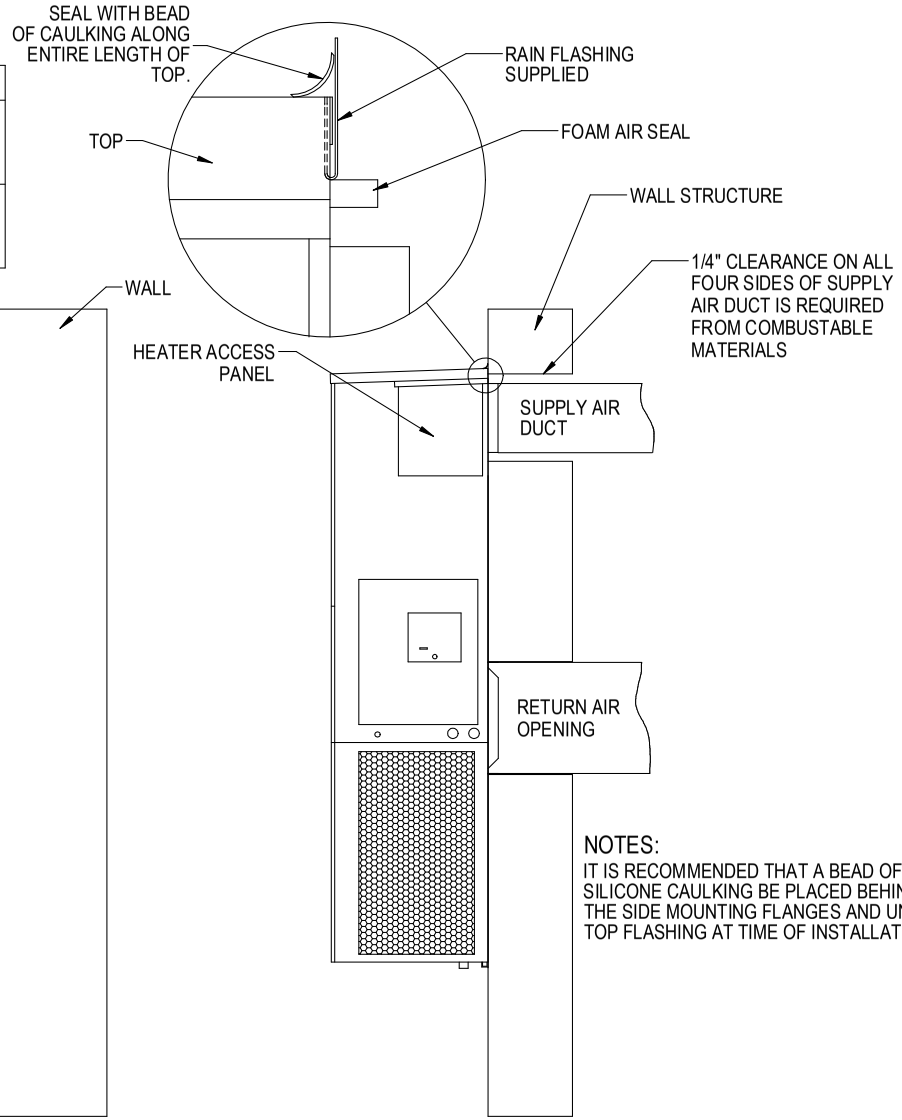

NOTES:
IT IS RECOMMENDED THAT A BEAD OF SILICONE CAULKING BE PLACED BEHIND THE SIDE MOUNTING FLANGES AND UNDER TOP FLASHING AT TIME OF INSTALLATION.

Right Side View

MIS-416 E

FIGURE 4
ELECTRIC HEAT CLEARANCE

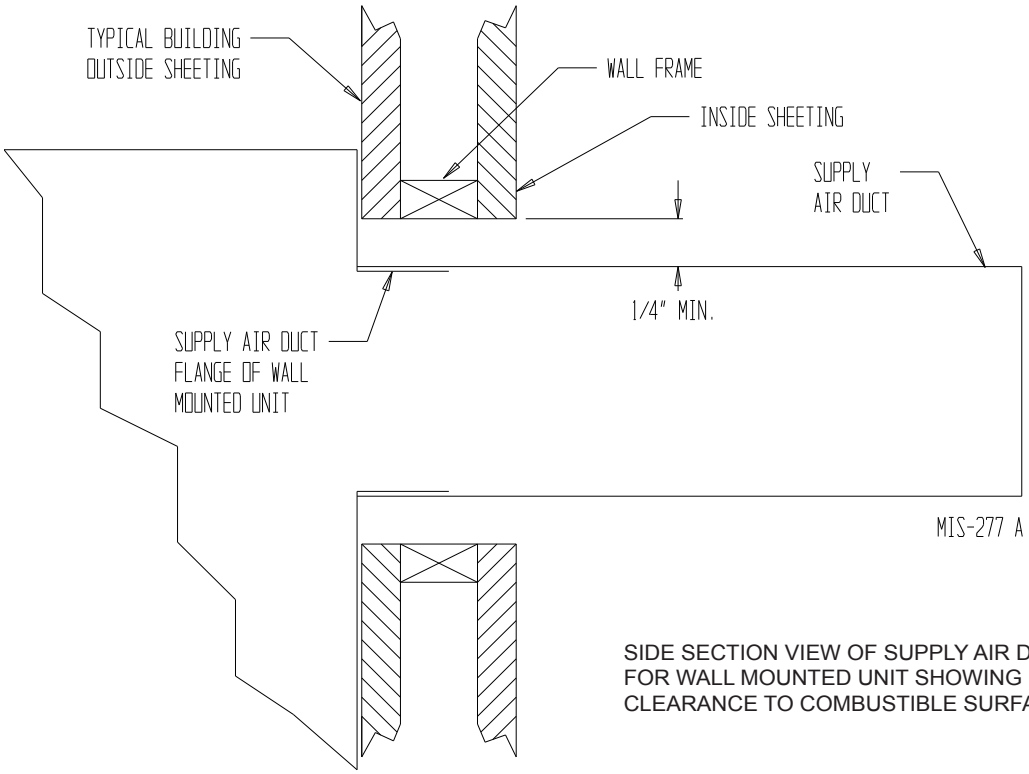

SIDE SECTION VIEW OF SUPPLY AIR DUCT FOR WALL MOUNTED UNIT SHOWING 1/4 INCH CLEARANCE TO COMBUSTIBLE SURFACES.

⚠ WARNING

A ***minimum*** of 1/4 inch clearance must be maintained between the supply air duct and combustible materials. This is required for the first 3 feet of ducting.

It is important to insure that the 1/4 inch minimum spacing is maintained at all points.

Failure to do this could result in overheating the combustible material and may result in a fire causing damage, injury or death.

FIGURE 5
WALL MOUNTING INSTRUCTIONS

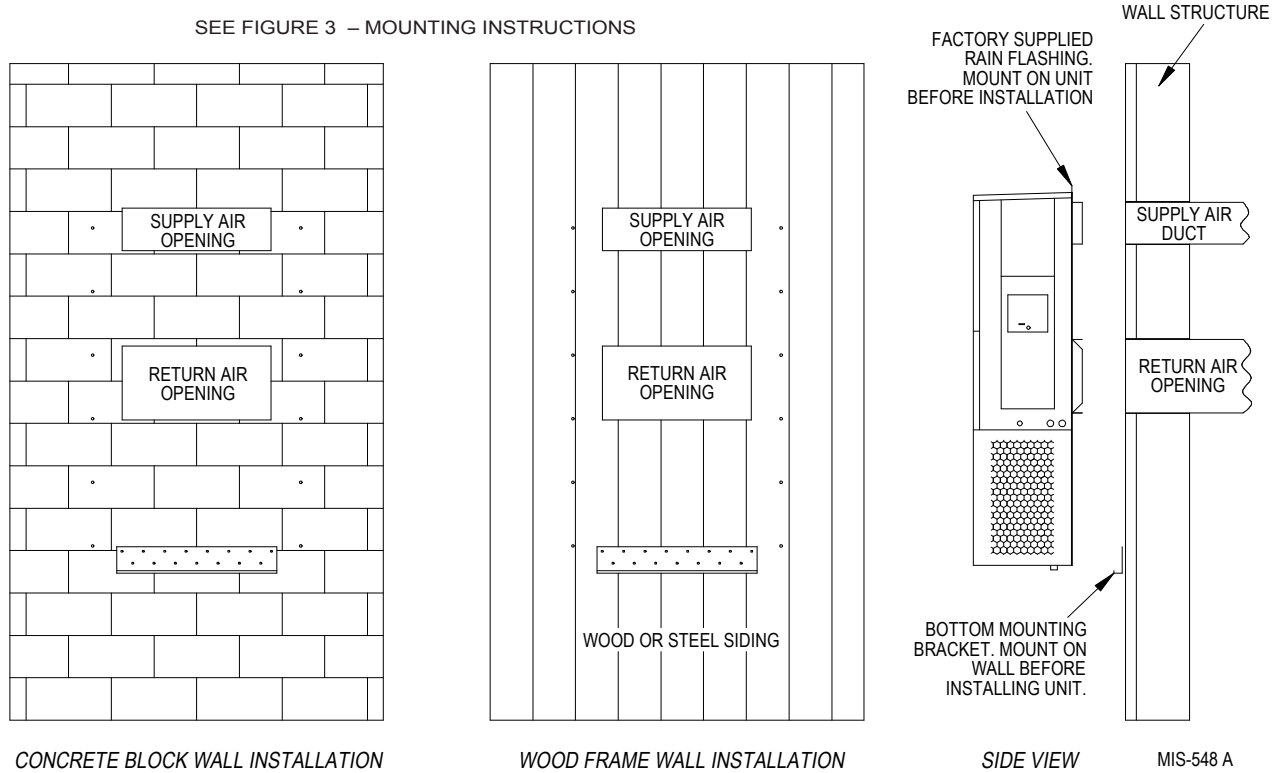

FIGURE 6
WALL MOUNTING INSTRUCTIONS

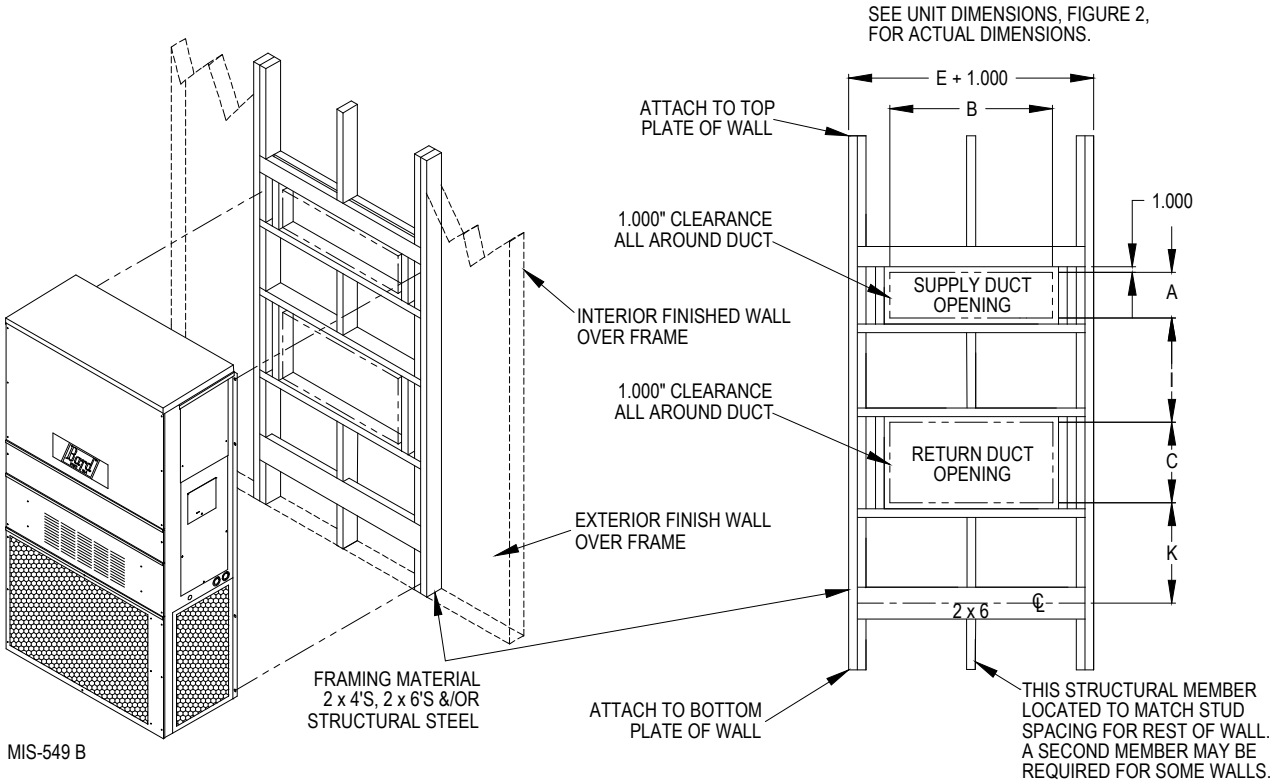

FIGURE 7
COMMON WALL MOUNTING INSTALLATIONS

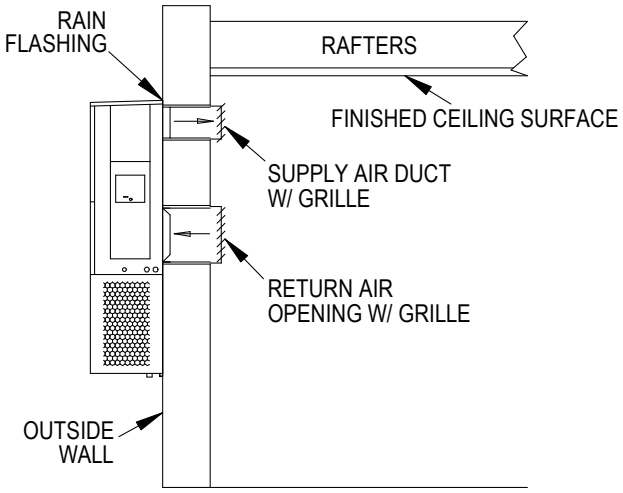

FREE AIR FLOW
NO DUCT

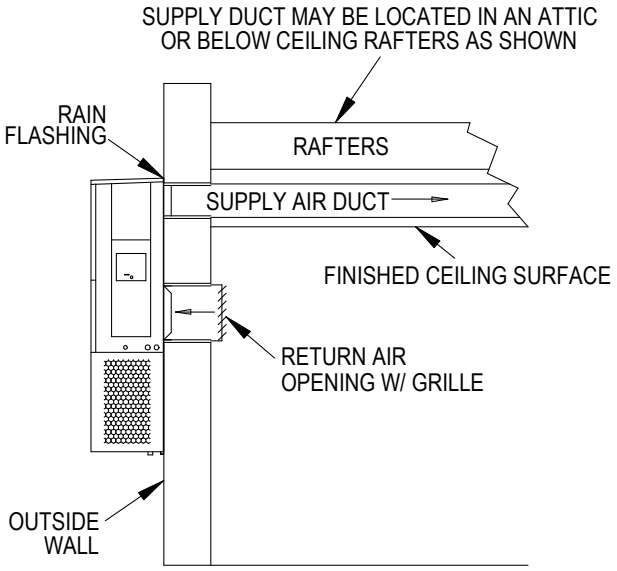

DUCTED SUPPLY
RETURN AT UNIT

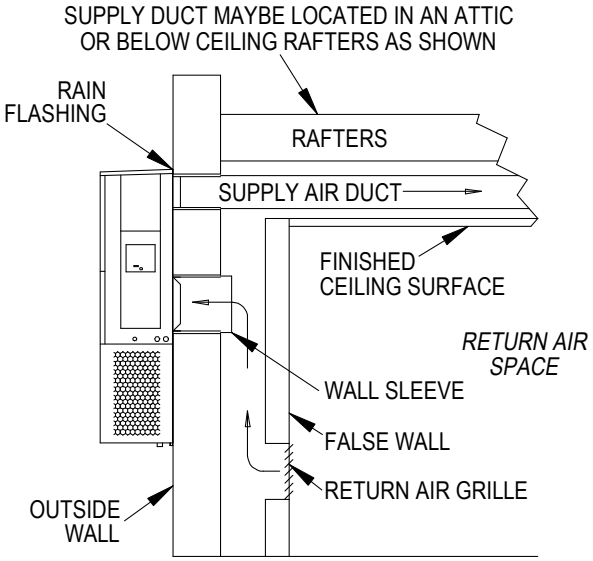

FALSE WALL INSTALLATION

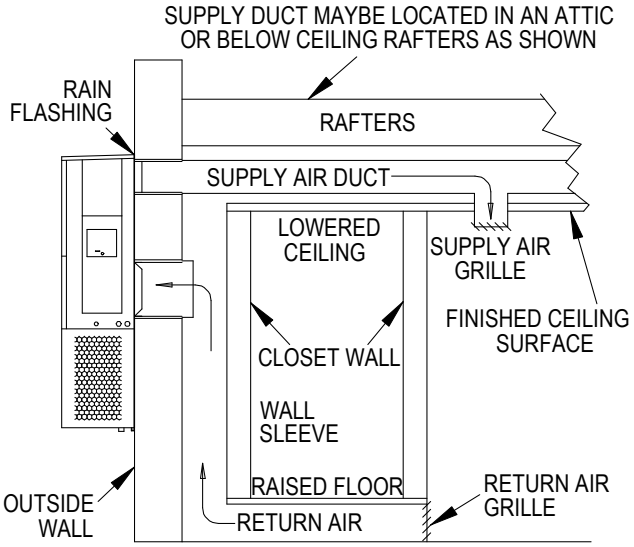

CLOSET INSTALLATION

MIS-550 B

WIRING – MAIN POWER

Refer to the unit rating plate for wire sizing information and maximum fuse or "HACR" type circuit breaker size. Each outdoor unit is marked with a "Minimum Circuit Ampacity". This means that the field wiring used must be sized to carry that amount of current. Depending on the installed KW of electric heat, there may be two field power circuits required. If this is the case, the unit serial plate will so indicate. All models are suitable only for connection with copper wire. Each unit and/or wiring diagram will be marked "Use Copper Conductors Only". These instructions ***must be*** adhered to. Refer to the National Electrical Code (NEC) for complete current carrying capacity data on the various insulation grades of wiring material. All wiring must conform to NEC and all local codes.

The electrical data lists fuse and wire sizes (75°C copper) for all models including the most commonly used heater sizes. Also shown are the number of field power circuits required for the various models with heaters.

The unit rating plate lists a "Maximum Time Delay Relay Fuse" or "HACR" type circuit breaker that is to be used with the equipment. The correct size must be used for proper circuit protection and also to assure that there will be no nuisance tripping due to the momentary high starting current of the compressor motor.

The disconnect access door on this unit may be locked to prevent unauthorized access to the disconnect. To convert for the locking capability, bend the tab located in the bottom left-hand corner of the disconnect opening under the disconnect access panel straight out. This tab will now line up with the slot in the door. When shut, a padlock may be placed through the hole in the tab preventing entry.

See "Start Up" section for important information on three phase scroll compressor start ups.

See Table 6 for Electrical Specifications.

WIRING – LOW VOLTAGE WIRING

230/208V, 1 phase and 3 phase units are equipped with dual primary voltage transformers. All equipment leaves the factory wired on 240V tap. For 208V operation, reconnect from 240V to 208V tap. The acceptable operating voltage range for the 240 and 208V taps are:

TAP	RANGE
240	253 – 216
208	220 – 187

NOTE: The voltage should be measured at the field power connection point in the unit and while the unit is operating at full load (maximum amperage operating condition).

For wiring size and connections, refer to Wiring Manual 2100-554.

OPTIONAL OUTDOOR THERMOSTAT APPLICATIONS

Since most equipment at the time of manufacture is not designated for any specific destination of the country and are installed in areas not approaching the lower outdoor temperature range, outdoor thermostats are not factory installed as standard equipment, but are offered as an option. See Specification Sheet for outdoor thermostat options. They may vary according to the thermostat used to control the unit. There are also different applications for applying outdoor thermostats. The set point of either type of outdoor thermostat application is variable with geographic region and sizing of the heating equipment to the individual structure. Utilization of the heating Application Data, and the heat loss calculation of the building are useful in determining the correct set points.

NOTE: The additional LAB (low ambient bypass) relay is required to prevent heater operation during low temperature cooling operation.

THESE UNITS REQUIRE R-410A REFRIGERANT AND POLYOL ESTER OIL.

GENERAL:

1. Use separate service equipment to avoid cross contamination of oil and refrigerants.
2. Use recovery equipment rated for R-410A refrigerant.
3. Use manifold gauges rated for R-410A (800 psi/250 psi low).
4. R-410A is a binary blend of HFC-32 and HFC-125.
5. R-410A is nearly azeotropic - similar to R-22 and R-12. Although nearly azeotropic, charge with liquid refrigerant.
6. R-410A operates at 40-70% higher pressure than R-22, and systems designed for R-22 cannot withstand this higher pressure.
7. R-410A has an ozone depletion potential of zero, but must be reclaimed due to its global warming potential.
8. R-410A compressors use Polyol Ester oil.
9. Polyol Ester oil is hygroscopic; it will rapidly absorb moisture and strongly hold this moisture in the oil.
10. A liquid line dryer must be used - even a deep vacuum will not separate moisture from the oil.
11. Limit atmospheric exposure to 15 minutes.
12. If compressor removal is necessary, always plug compressor immediately after removal. Purge with small amount of nitrogen when inserting plugs.

TOPPING OFF SYSTEM CHARGE

If a leak has occurred in the system, Bard Manufacturing recommends reclaiming, evacuating (see criteria above), and charging to the nameplate charge. If done correctly, topping off the system charge can be done without problems.

With R-410A, there are no significant changes in the refrigerant composition during multiple leaks and recharges. R-410A refrigerant is close to being an azeotropic blend (it behaves like a pure compound or single component refrigerant). The remaining refrigerant charge, in the system, may be used after leaks have occurred and then "top-off" the charge by utilizing the pressure charts on the inner control panel cover as a guideline.

REMEMBER: When adding R-410A refrigerant, it must come out of the charging cylinder/tank as a liquid to avoid any fractionation, and to insure optimal system performance. Refer to instructions for the cylinder that is being utilized for proper method of liquid extraction.

⚠ WARNING

Failure to conform to these practices could lead to damage, injury or death.

SAFETY PRACTICES:

1. Never mix R-410A with other refrigerants.
2. Use gloves and safety glasses, Polyol Ester oils can be irritating to the skin, and liquid refrigerant will freeze the skin.
3. Never use air and R-410A to leak check; the mixture may become flammable.
4. Do not inhale R-410A – the vapor attacks the nervous system, creating dizziness, loss of coordination and slurred speech. Cardiac irregularities, unconsciousness and ultimate death can result from breathing this concentration.
5. Do not burn R-410A. This decomposition produces hazardous vapors. Evacuate the area if exposed.
6. Use only cylinders rated DOT4BA/4BW 400.
7. Never fill cylinders over 80% of total capacity.
8. Store cylinders in a cool area, out of direct sunlight.
9. Never heat cylinders above 125°F.
10. Never trap liquid R-410A in manifold sets, gauge lines or cylinders. R-410A expands significantly at warmer temperatures. Once a cylinder or line is full of liquid, any further rise in temperature will cause it to burst.

IMPORTANT INSTALLER NOTE

For improved start up performance wash the indoor coil with a dish washing detergent.

HIGH & LOW PRESSURE SWITCH

All C**H wall mounted air conditioner series models are supplied with a remote reset for the high and low pressure switch. If tripped, this pressure switch may be reset by turning the thermostat off then back on again.

THREE PHASE SCROLL COMPRESSOR START UP INFORMATION

Scroll compressors, like several other types of compressors, will only compress in one rotational direction. Direction of rotation is not an issue with single phase compressors since they will always start and run in the proper direction.

However, three phase compressors will rotate in either direction depending upon phasing of the power. Since there is a 50-50 chance of connecting power in such a way as to cause rotation in the reverse direction, verification of proper rotation must be made. Verification of proper rotation direction is made by observing that suction pressure drops and discharge pressure rises when the compressor is energized. Reverse rotation also results in an elevated sound level over that with correct rotation, as well as substantially reduced current draw compared to tabulated values.

Verification of ***proper rotation*** must be made at the time the equipment is put into service. If improper rotation is corrected at this time, there will be no negative impact on the durability of the compressor. However, reverse operation for over one hour may have a negative impact on the bearing due to oil pump out.

NOTE: If compressor is allowed to run in reverse rotation for several minutes, the compressor's internal protector will trip.

All three phase ZP compressors are wired identically internally. As a result, once the correct phasing is determined for a specific system or installation, connecting properly phased power leads to the same Fusite terminal should maintain proper rotation direction.

The direction of rotation of the compressor may be changed by reversing any two line connections to the unit.

PHASE MONITOR

All units with three phase scroll compressors are equipped with a 3-phase line monitor to prevent compressor damage due to phase reversal.

The phase monitor in this unit is equipped with two LEDs. If the Y signal is present at the phase monitor and phases are correct the green LED will light.

If phases are reversed, the red fault LED will be lit and compressor operation is inhibited.

If a fault condition occurs, reverse two of the supply leads to the unit. ***Do not reverse any of the unit factory wires as damage may occur.***

SERVICE HINTS

1. Caution owner/operator to maintain clean air filters at all times. Also, not to needlessly close off supply and return air registers. This reduces airflow through the system, which shortens equipment service life as well as increasing operating costs.
2. Check all power fuses or circuit breakers to be sure they are the correct rating.
3. Periodic cleaning of the outdoor coil to permit full and unrestricted airflow circulation is essential.

⚠ CAUTION

Remove service panels carefully. Falling panels could cause lacerations.

SEQUENCE OF OPERATION

COOLING STAGE 1 – Circuit R-Y makes at thermostat pulling in compressor contactor, starting the compressor and outdoor motor. The G (indoor motor) circuit is automatically completed on any call for cooling operation or can be energized by manual fan switch on subbase for constant air circulation.

COOLING STAGE 2 – Circuit R-Y1 makes at the thermostat energizing the 2nd stage solenoid in the compressor. Default position is not energized. Compressor will run at low capacity until this solenoid is energized.

HEATING STAGE 1 – A 24V solenoid coil on reversing valve controls heating cycle operation. Two thermostat options, one allowing "Auto" changeover from cycle to cycle and the other constantly energizing solenoid coil during heating season and thus eliminating pressure equalization noise except during defrost, are to be used. On "Auto" option a circuit is completed from R-B and R-Y on each heating "on" cycle, energizing reversing valve solenoid and pulling in compressor contactor starting compressor and outdoor motor. R-G also make starting indoor blower motor. Heat pump heating cycle now in operation. The second option has no "Auto" changeover position, but instead energizes the reversing valve solenoid constantly whenever the system switch on subbase is placed in "Heat" position, the "B" terminal being constantly energized from R. A thermostat demand for Stage 1 heat completes R-Y circuit, pulling in compressor contactor starting compressor and outdoor motor. R-G also make starting indoor blower motor.

HEATING STAGE 2 – Circuit R-Y2 makes at the thermostat energizing the 2nd stage solenoid in the compressor.

PRESSURE SERVICE PORTS

High and low pressure service ports are installed on all units so that the system operating pressures can be observed. Pressure tables can be found later in the manual covering all models. It is imperative to match the correct pressure table to the unit by model number. See Tables 5A & 5B.

DEFROST CYCLE

The defrost cycle is controlled by temperature and time on the solid state heat pump control.

When the outdoor temperature is in the lower 40°F temperature range or colder, the outdoor coil temperature is 32°F or below. This coil temperature is sensed by the coil temperature sensor mounted near the bottom of the outdoor coil. Once coil temperature reaches 30°F or below, the coil temperature sensor sends a signal to the control logic of the heat pump control and the defrost timer will start accumulating run time.

After 30, 60 or 90 minutes of heat pump operation at 30°F or below, the heat pump control will place the system in the defrost mode.

During the defrost mode, the refrigerant cycle switches back to the cooling cycle, the outdoor motor stops, electric heaters are energized, and hot gas passing through the outdoor coil melts any accumulated frost. When the temperature rises to approximately 57°F, the coil temperature sensor will send a signal to the heat pump control which will return the system to heating operations automatically.

If some abnormal or temporary condition such as a high wind causes the heat pump to have a prolonged defrost cycle, the heat pump control will restore the system to heating operation automatically after 8 minutes.

The heat pump defrost control board has an option of 30, 60 or 90-minute setting. By default, this unit is shipped from the factory with the defrost time on the 60 minute pin. If circumstances require a change to another time, remove the wire from the 60-minute terminal and reconnect to the desired terminal. Refer to Figure 8.

There is a cycle speed up jumper on the control. This can be used for testing purposes to reduce the time between defrost cycle operation without waiting for time to elapse.

Use a small screwdriver or other metallic object, or another ¼ inch QC, to short between the *SPEEDUP* terminals to accelerate the HPC timer and initiate defrost.

Be careful not to touch any other terminals with the instrument used to short the *SPEEDUP* terminals. It may take up to 10 seconds with the *SPEEDUP* terminals shorted for the speedup to be completed and the defrost cycle to start.

As soon as the defrost cycle kicks in remove the shorting instrument from the SPEEDUP terminals. Otherwise the timing will remain accelerated and run through the 1-minute minimum defrost length sequence in a matter of seconds and will automatically terminate the defrost sequence.

There is an initiate defrost jumper (sen jump) on the control that can be used at any outdoor ambient during the heating cycle to simulate a 0° coil temperature.

This can be used to check defrost operation of the unit without waiting for the outdoor ambient to fall into the defrost region. By placing a jumper across the *SEN JMP* terminals (a ¼ inch QC terminal works best) the defrost sensor mounted on the outdoor coil is shunted out & will activate the timing circuit. This permits the defrost cycle to be checked out in warmer weather conditions without the outdoor temperature having to fall into the defrost region.

In order to terminate the defrost test the *SEN JMP* jumper must be removed. If left in place too long, the compressor could stop due to the high pressure control opening because of high pressure condition created by operating in the cooling mode with outdoor fan off. Pressure will rise fairly fast as there is likely no actual frost on the outdoor coil in this artificial test condition.

There is also a 5-minute compressor time delay function built into the HPC. This is to protect the compressor from short cycling conditions. The board's LED will have a fast blink rate when in the compressor time delay. In some instances, it is helpful to the service technician to override or speed up this timing period, and shorting out the *SPEEDUP* terminals for a few seconds can do this.

Low Pressure Switch Bypass Operation - The control has a selectable (SW1) low pressure switch bypass set up to ignore the low pressure switch input during the first (30, 60, 120 or 180 seconds) of "Y" operation.

After this period expires, the control will then monitor the low pressure switch input normally to make sure that the switch is closed during "Y" operation.

High Pressure Switch Operation - The control has a built-in lockout system that allows the unit to have the high pressure switch trip up to two times in one hour and only encounter a "soft" lockout. A "soft" lockout shuts the compressor off and waits for the pressure switch to reset, which at that point then allows the compressor to be restarted as long as the 5-minute short cycle timer has run out. If the high pressure switch trips a third time within one hour, the unit is in "hard" lockout indicating something is certainly wrong and it will not restart itself.

FIGURE 8
DEFROST CONTROL BOARD

SW 1	SW 2	TIME (SEC)
OFF	OFF	30
ON	OFF	60
OFF	ON	120*
ON	ON	180

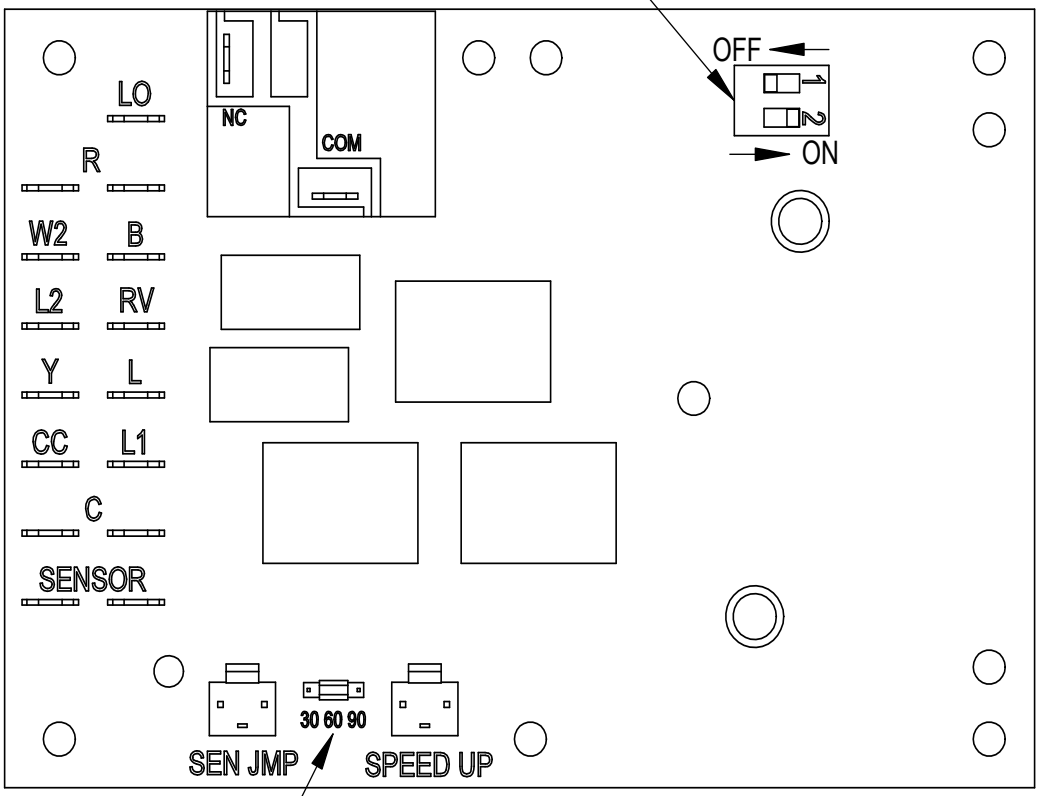

MIS-2668 A

TROUBLESHOOTING

SOLID STATE HEAT PUMP CONTROL TROUBLESHOOTING PROCEDURE

1. **NOTE:** *A thorough understanding of the defrost cycle sequence is essential. Review that section earlier in this manual prior to troubleshooting the control.* Turn on AC power supply to unit.
2. Turn thermostat blower switch to "fan on" – the indoor blower should start. (If it doesn't, troubleshoot indoor unit and correct problem.)
3. Turn thermostat blower to "auto" position. Indoor blower should stop. **NOTE:** *Many models have a 1-minute blower time delay on "off" command; wait for this to time-out.*
4. Set system switch to "heat" or "cool". Adjust thermostat to call for heat or cool. The indoor blower, compressor and outdoor fan should start.

NOTE: If there was no power to 24 volt transformer, the compressor and outdoor fan motor will not start for 5 minutes. This is because of the compressor short cycle protection.

LED BLINK CODES

BLINK	FUNCTION
Slow	Normal function (1.0 sec on/1.0 sec off)
Fast	ASCD timer active (0.1 sec on/0.1 sec off)
1	Low pressure switch failure
2	High pressure switch failure/"Soft" Lockout
3	Defrost mode active
4	High pressure switch failure/"Hard" Lockout

TABLE 3 TROUBLESHOOTING

Symptom	Description, Check & Possible Causes	What & How to Check / Repair
Compressor will not start (heating or cooling)	1. Check for LED illumination. Is there an LED illuminated on the board (flashing)?	Yes = go to Step #2; No = go to Step #
	2. Check for error codes. Is the LED flashing a Code?	Yes = go to Step #4; No = go to Step #8
	3. Check for power at board. Is there 24 volts AC between R and C?	Yes = go to Step #13; No = go to Step #9
	4. Check codes. What code is blinking?	Code "1", go to Step #6; Code "2", go to Step#7; Fast Blink, go to Step #5
	5. Compressor delay active. Wait for 5 minute delay or jump board's "speed up pins".	Check for proper operation; if still needed, go back to Step #1.
	6. Low pressure fault.	Check wiring circuit and unit pressures.
	7. High pressure fault.	Check wiring circuit and unit pressures.
	8. Check for Compressor input signal. Is there 24 volts AC between Y and C?	Yes = go to Step #10; No = go to Step #11
	9. No power to board.	The unit either does not have unit voltage, the transformer is bad or the unit wiring is incorrect.
	10. Check for Compressor output signal. Is there 24 volts AC between CC & C?	Yes = go to Step #12; No = go to Step #13
	11. No "Y" compressor input signal.	Check thermostat wiring, incorrect phase of unit (see section on Phase Monitor), and finally unit wiring.
	12. No "CC" compressor output signal.	Check compressor contactor for proper operation and finally check compressor.
	13. Faulty board.	Replace defrost board.
Fan outdoor motor does not run (cooling or heating except during defrost)	Heat pump control defective	Check across fan relay on heat pump control. (Com-NC) Replace heat pump control.
	Motor defective	Check for open or shorted motor winding. Replace motor.
	Motor capacitor defective	Check capacitor rating. Check for open or shorted capacitor. Replace capacitor.
Reversing valve does not energize (heating only)	Heat pump control defective	Check for 24V between RV-C and B-C. 1. Check control circuit wiring. 2. Replace heat pump control.
	Reversing valve solenoid coil defective	Check for open or shorted coil. Replace solenoid coil.
Unit will not go into defrost (heating only)	Temperature sensor or heat pump control defective	Disconnect temperature sensor from board and jumper across "SPEEDUP" terminals and "SEN JMP" terminals. This should cause the unit to go through a defrost cycle within one minute. 1. If unit goes through defrost cycle, replace temperature sensor. 2. If unit does not go through defrost cycle, replace heat pump control.
Unit will not come out of defrost (heating only)	Temperature sensor or heat pump control defective	Jumper across "SPEEDUP" terminal. This should cause the unit to come out of defrost within one minute. 1. If unit comes out of defrost cycle, replace temperature sensor. 2. If unit does not come out of defrost cycle, replace heat pump control.

CHECKING TEMPERATURE SENSOR OUTSIDE UNIT CIRCUIT

1. Disconnect temperature sensor from board and from outdoor coil.
2. Use an ohmmeter and measure the resistance of the sensor. Also use ohmmeter to check for short or open.
3. Check resistance reading to chart of resistance. Use sensor ambient temperature. (Tolerance of part is ± 10%.)
4. If sensor resistance reads very low, then sensor is shorted and will not allow proper operation of the heat pump control.
5. If sensor is out of tolerance, shorted, open or reads very low ohms then it should be replaced.

TEMPERATURE F VS. RESISTANCE R OF TEMPERATURE SENSOR

F	R	F	R	F	R	F	R
-25	196871	13	56985	51	19374	89	7507
-24	190099	14	55284	52	18867	90	7334
-23	183585	15	53640	53	18375	91	7165
-22	177318	16	52051	54	17989	92	7000
-21	171289	17	50514	55	17434	93	6840
-20	165487	18	49028	56	16984	94	6683
-19	159904	19	47590	57	16547	95	6531
-18	154529	20	46200	58	16122	96	6383
-17	149355	21	44855	59	15710	97	6239
-16	144374	22	43554	60	15310	98	6098
-15	139576	23	42295	61	14921	99	5961
-14	134956	24	41077	62	14544	100	5827
-13	130506	25	39898	63	14177	101	5697
-12	126219	26	38757	64	13820	102	5570
-11	122089	27	37652	65	13474	103	5446
-10	118108	28	36583	66	13137	104	5326
-9	114272	29	35548	67	12810	105	5208
-8	110575	30	34545	68	12492	106	5094
-7	107010	31	33574	69	12183	107	4982
-6	103574	32	32634	70	11883	108	4873
-5	100260	33	31723	71	11591	109	4767
-4	97064	34	30840	72	11307	110	4663
-3	93981	35	29986	73	11031	111	4562
-2	91008	36	29157	74	10762	112	4464
-1	88139	37	28355	75	10501	113	4367
0	85371	38	27577	76	10247	114	4274
1	82699	39	26823	77	10000	115	4182
2	80121	40	26092	78	9760	116	4093
3	77632	41	25383	79	9526	117	4006
4	75230	42	24696	80	9299	118	3921
5	72910	43	24030	81	9077	119	3838
6	70670	44	23384	82	8862	120	3757
7	68507	45	22758	83	8653	121	3678
8	66418	46	22150	84	8449	122	3601
9	64399	47	21561	85	8250	123	3526
10	62449	48	20989	86	8057	124	3452
11	60565	49	20435	87	7869		
12	58745	50	19896	88	7686		

FAN BLADE SETTING DIMENSIONS

Shown in Figure 9 is the correct fan blade setting for proper air delivery across the outdoor coil. Refer to Table 4 for unit specific dimension.

Any service work requiring removal or adjustment in the fan and/or motor area will require that the dimensions below be checked and blade adjusted in or out on the motor shaft accordingly.

FIGURE 9
FAN BLADE SETTING

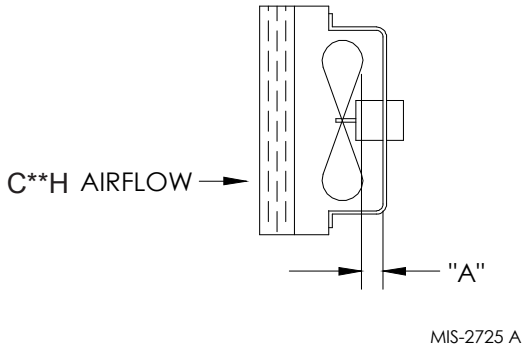

TABLE 4
FAN BLADE DIMENSION

MODEL	Dimension A
C24H C30H C36H C42H C48H C60H	1.00"

REMOVAL OF FAN SHROUD

1. Disconnect all power to the unit.
2. Remove the screws holding both grilles, one on each side of unit, and remove grilles.
3. Remove screws holding fan shroud to condenser and bottom. Nine (9) screws.
4. Unwire condenser fan motor.
5. Slide complete motor, fan blade, and shroud assembly out the left side of the unit.
6. Service motor/fan as needed.
7. Reverse steps to reinstall.

R-410A

REFRIGERANT CHARGE

This unit was charged at the factory with the quantity of refrigerant listed on the serial plate. AHRI capacity and efficiency ratings were determined by testing with this refrigerant charge quantity.

The following pressure tables show nominal pressures for the units. Since many installation specific situations can affect the pressure readings, this information should only be used by certified technicians as a guide for evaluating proper system performance. They shall not be used to adjust charge. If charge is in doubt, reclaim, evacuate and recharge the unit to the serial plate charge.

TABLE 5A
COOLING PRESSURE TABLE

COOLING			AIR TEMPERATURE ENTERING OUTDOOR COIL °F									
MODEL	RETURN AIR TEMPERATURE	PRESSURE	75°F	80°F	85°F	90°F	95°F	100°F	105°F	110°F	115°F	120°F
C24H	75° DB 62° WB	LOW SIDE HIGH SIDE	134 288	137 309	138 331	141 353	144 377	146 402	148 427	151 454	152 482	154 510
	80° DB 67° WB	LOW SIDE HIGH SIDE	143 295	146 317	148 339	151 362	154 387	156 412	158 438	161 466	163 494	165 523
	85° DB 72° WB	LOW SIDE HIGH SIDE	148 305	151 328	153 351	156 375	159 401	161 426	164 453	167 482	169 511	171 541
C30H	75° DB 62° WB	LOW SIDE HIGH SIDE	129 303	131 328	133 353	135 378	136 405	137 431	138 457	139 485	141 513	142 541
	80° DB 67° WB	LOW SIDE HIGH SIDE	138 311	140 336	142 362	144 388	145 415	147 442	148 469	149 497	151 526	152 555
	85° DB 72° WB	LOW SIDE HIGH SIDE	143 322	145 348	147 375	149 402	150 430	152 457	153 485	154 514	156 544	157 574
C36H	75° DB 62° WB	LOW SIDE HIGH SIDE	134 305	135 326	137 348	137 372	139 399	140 427	141 458	143 490	145 526	146 563
	80° DB 67° WB	LOW SIDE HIGH SIDE	143 313	144 334	146 357	147 382	149 409	150 438	151 470	153 503	155 539	156 577
	85° DB 72° WB	LOW SIDE HIGH SIDE	148 324	149 346	151 369	152 395	154 423	155 453	156 486	158 521	160 558	161 597
C42H	75° DB 62° WB	LOW SIDE HIGH SIDE	133 302	133 321	133 341	134 365	136 391	137 418	138 449	141 481	143 516	146 553
	80° DB 67° WB	LOW SIDE HIGH SIDE	142 310	142 329	142 350	143 374	145 401	146 429	148 460	151 493	153 529	156 567
	85° DB 72° WB	LOW SIDE HIGH SIDE	147 321	147 341	147 362	148 387	150 415	151 444	153 476	156 510	158 548	161 587
C48H	75° DB 62° WB	LOW SIDE HIGH SIDE	137 315	137 336	138 360	139 385	141 412	142 442	143 473	145 506	147 541	148 578
	80° DB 67° WB	LOW SIDE HIGH SIDE	147 323	147 345	148 369	149 395	151 423	152 453	153 485	155 519	157 555	158 593
	85° DB 72° WB	LOW SIDE HIGH SIDE	152 334	152 357	153 382	154 409	156 438	157 469	158 502	160 537	162 574	164 614
C60H	75° DB 62° WB	LOW SIDE HIGH SIDE	135 290	136 313	137 337	137 362	139 387	140 412	143 438	146 464	149 490	152 518
	80° DB 67° WB	LOW SIDE HIGH SIDE	145 297	146 321	147 346	147 371	149 397	150 423	153 449	156 476	159 503	163 531
	85° DB 72° WB	LOW SIDE HIGH SIDE	150 307	151 332	152 358	152 384	154 411	155 438	158 465	161 493	165 521	169 550

Low side pressure ± 4 PSIG
High side pressure ± 10 PSIG

Tables are based upon rated CFM (airflow) across the evaporator coil. If there is any doubt as to correct operating charge being in the system, the charge should be removed, system evacuated and recharged to serial plate charge weight.

NOTE: Pressure table based on high speed condenser fan operation. If condensing pressures appear elevated check condenser fan wiring. See "Condenser Fan Operation".

TABLE 5B
HEATING PRESSURES – (ALL TEMPERATURES °F)

HEATING			AIR TEMPERATURE ENTERING OUTDOOR COIL °F													
MODEL	RETURN AIR TEMPERATURE	PRESSURE	0°F	5°F	10°F	15°F	20°F	25°F	30°F	35°F	40°F	45°F	50°F	55°F	60°F	65°F
C24H	70° DB	LOW SIDE HIGH SIDE	25 233	34 242	42 251	50 260	58 269	66 278	74 287	81 296	88 305	95 314	102 322	109 331	115 339	121 348
C30H	70° DB	LOW SIDE HIGH SIDE	34 261	39 267	45 274	51 281	57 289	64 297	71 307	78 317	86 327	94 338	102 350	110 363	119 376	128 390
C36H	70° DB	LOW SIDE HIGH SIDE	36 244	42 251	48 259	54 267	61 275	68 283	75 291	83 299	90 307	99 316	107 324	116 333	125 341	135 350
C42H	70° DB	LOW SIDE HIGH SIDE	37 270	42 274	47 279	52 285	59 293	65 301	73 311	81 322	89 334	98 347	108 361	118 377	128 394	140 411
C48H	70° DB	LOW SIDE HIGH SIDE	24 240	34 251	43 261	52 271	60 280	68 289	75 297	83 305	89 312	96 318	102 325	108 330	113 336	118 341
C60H	70° DB	LOW SIDE HIGH SIDE	31 230	40 245	48 259	56 271	64 283	72 293	80 302	88 310	95 317	102 323	109 327	116 331	123 333	130 334

TABLE 6

*Electrical Specifications — C**H Series*

Model	Rated Volts & Phase	No. Field Power Circuits	Single Circuit				Multiple Circuit											
			① Minimum Circuit Ampacity	② Max. External Fuse or Ckt. Brkr.	③ Field Power Wire Size	③ Ground Wire	① Minimum Circuit Ampacity			② Max. Circuit Exterior Fuse or Ckt. Brkr.			③ Field Power Wire Size			③ Ground Wire		
							Ckt. A	Ckt. B	Ckt. C	Ckt. A	Ckt. B	Ckt. C	Ckt. A	Ckt. B	Ckt. C	Ckt. A	Ckt. B	Ckt. C
C24H1-A0Z	230/208-60-1	1	22	30	10	10												
-A04		1	42	50	8	10												
④ -AS8		1	48	50	8	10												
⑦ -AF8		1 or 2	63	70	6	8	22	42		30	45		10	8		10	10	
C24H1-B0Z	230/208-60-3	1	15	20	12	12												
-B06		1	33	35	8	10												
-B09		1	42	45	8	10												
C30H1-A0Z	230/208-60-1	1	23	30	10	10												
-A04		1	44	50	8	10												
④ -AS8		1	49	50	8	10												
⑦ -AF8		1 or 2	65	70	6	8	23	42		30	45		10	8		10	10	
C30H1-B0Z	230/208-60-3	1	18	25	10	10												
-B06		1	36	40	8	10												
-B09		1	45	45	8	10												
C30H1-C0Z	460-60-3	1	10	15	14	14												
-C06		1	19	20	12	12												
-C09		1	24	25	10	10												
C36H1-A0Z	230/208-60-1	1	27	40	8	10												
-A05		1	53	60	6	10												
-A10		1 or 2	79	80	4	8	27	52		40	60		8	6		10	10	
⑤ -A15		1 or 2	85	90	4	8	33	52		40	60		8	6		10	10	
C36H1-B0Z	230/208-60-3	1	23	30	10	10												
-B06		1	41	45	8	10												
-B09		1	50	50	8	10												
⑥ -B15		1	52	60	6	10												
C36H1-C0Z	460-60-3	1	12	15	14	14												
-C06		1	21	25	10	10												
-C09		1	26	30	10	10												
⑥ -C15		1	27	30	10	10												
C42H1-A0Z	230/208-60-1	1	31	40	8	10												
-A05		1	57	60	6	10												
-A10		1 or 2	83	90	4	8	31	52		40	60		8	6		10	10	
⑤ -A15		1 or 2	86	90	3	8	34	52		40	60		8	6		10	10	
C42H1-B0Z	230/208-60-3	1	27	35	8	10												
-B06		1	45	50	8	10												
-B09		1	54	60	6	10												
⑥ -B15		1	54	60	6	10												
C42H1-C0Z	460-60-3	1	13	15	14	14												
-C06		1	22	25	10	10												
-C09		1	26	30	10	10												
⑥ -C15		1	27	30	10	10												
C48H1-A0Z	230/208-60-1	1	37	50	8	10												
-A04		1	57	60	6	10												
-A05		1	62	70	6	8	37	26		50	30		8	10		10	10	
-A10		1 or 2	88	90	3	8	37	52		50	60		8	6		10	10	
⑤ -A15		1 or 2	88	90	3	8	37	52		50	60		8	6		10	10	
⑤ -A20		1 or 3	113	125	2	6	37	52	26	50	60	30	8	6	10	10	10	10
C48H1-B0Z	230/208-60-3	1	27	40	8	10												
-B06		1	45	50	8	10												
-B09		1	54	60	6	10												
⑥ -B15		1	54	60	6	10												
⑥ -B18		2	N/A	N/A	N/A	N/A	54	28		60	30		6	10		10	10	
C48H1-C0Z	460-60-3	1	13	20	12	12												
-C06		1	22	25	10	10												
-C09		1	27	30	10	10												
⑥ -C15		1	27	30	10	10												
C60H1-A0Z	230/208-60-1	1	45	60	8	10												
-A05		1 or 2	71	80	4	8	45	26		50	30		8	10		10	10	
-A10		1 or 2	97	100	3	8	45	52		50	60		8	6		10	10	
⑤ -A15		1 or 2	97	100	3	8	45	52		50	60		8	6		10	10	
⑤ -A20		1 or 3	113	125	2	6	45	52	26	50	60	30	8	6	10	10	10	10
C60H1-B0Z	230/208-60-3	1	32	45	8	10												
-B06		1	50	60	8	10												
-B09		1	59	60	6	10												
⑥ -B15		1	59	60	6	10												
⑥ -B18		2	N/A	N/A	N/A	N/A	59	28		60	30		6	10		10	10	
C60H1-C0Z	460-60-3	1	17	20	12	12												
-C06		1	26	30	10	10												
-C09		1	31	35	8	10												
⑥ -C15		1	31	35	8	10												

① These "Minimum Circuit Ampacity" values are to be used for sizing the field power conductors. Refer to the National Electrical Code (latest version), Article 310 for power conductor sizing.
Caution: When more than one field power circuit is run through one conduit, the conductors must be derated. Pay special attention to note 8 of Table 310 regarding Ampacity Adjustment Factors when more than three (3) conductors are in a raceway.
② Maximum size of the time delay fuse or HACR type circuit breaker for protection of field wiring conductors.
③ Based on 75°C copper wire. All wiring must conform to the National Electrical Code and all local codes.
④ Maximum KW that can operate with the heat pump on is 4KW. Full heat available during Emergency Heat Mode.
⑤ Maximum KW that can operate with the heat pump on is 10KW. Full heat available during Emergency Heat Mode.
⑥ Maximum KW that can operate with the heat pump on is 9KW. Full heat available during Emergency Heat Mode.
⑦ Maximum KW that can operate with the heat pump on is 8KW. Full heat available during Emergency Heat Mode.
IMPORTANT: While this electrical data is presented as a guide, it is important to electrically connect properly sized fuses & conductor wires in accordance with the National Electrical Code & all local codes.
NOTE A: -C Models have Rotary Disconnect. C0C 460V circuit breaker only available for 0KW. All electrical ratings are the same.

TABLE 7
C**H INDOOR BLOWER PERFORMANCE - CFM (0.00" — 0.50" $H_2$0) ①

Model	Rated ESP	① MAX ESP	② Blower Only	③ Cooling & Heat Pump Stage 1	④ Cooling & Heat Pump Stage 2	④ Electric Heat
C24H	.10	.50	550	550	740	900
C30H	.10	.50	650	650	900	900
C36H	.15	.50	800	800	1100	1100
C42H	.15	.50	800	900	1250	1250
C48H	.20	.50	825	1000	1550	1550
C60H	.20	.50	850	1300	1650	1650

NOTE: These units are equipped with a variable speed (ECM) indoor motor that automatically adjusts itself to maintain approximately the same rate of indoor airflow in both heating & cooling, dry & wet coil conditions and at both 230/208 or 460 volts.

① Maximum ESP (inches WC) shown is with 2" thick disposable filter.
② Blower only CFM is the total air being circulated during continuous fan mode. Airflow remains constant.
③ Blower only CFM reduces during continuous fan mode. Requires wiring modification; consult Installation Instructions & Wiring Diagram.
④ CFM output on Cooling or Electric Heat.

TROUBLESHOOTING GE ECM™ MOTORS

CAUTION:

Disconnect power from unit before removing or replacing connectors, or servicing motor. To avoid electric shock from the motor's capacitors, disconnect power and wait at least 5 minutes before opening motor.

Symptom	Cause/Procedure
Motor rocks slightly when starting	• This is normal start-up for ECM
Motor won't start • No movement	• Check blower turns by hand • Check power at motor • Check low voltage (24 Vac R to C) at motor • Check low voltage connections (G, Y, W, R, C) at motor • Check for unseated pins in connectors on motor harness • Test with a temporary jumper between R - G • Check motor for tight shaft • Perform motor/control replacement check • **Perform Moisture Check**
• Motor rocks, but won't start	• Check for loose or compliant motor mount • Make sure blower wheel is tight on shaft • Perform motor/control replacement check
Motor oscillates up load **& down while being tested off of blower**	• It is normal for motor to oscillate with no on shaft
Motor starts, but runs erratically	
• Varies up and down or intermittent	• Check line voltage for variation or "sag" • Check low voltage connections (G, Y, W, R, C) at motor, unseated pins in motor harness connectors • Check "Bk" for erratic CFM command (in variable-speed applications) • Check out system controls, Thermostat • **Perform Moisture Check**
• "Hunts" or "puffs" at high CFM (speed)	• Does removing panel or filter reduce "puffing"? - Reduce restriction - Reduce max airflow
• Stays at low CFM despite system call for cool or heat CFM	• Check low voltage (Thermostat) wires and connections • Verify fan is not in delay mode; wait until delay complete • "R" missing/not connected at motor • Perform motor/control replacement check
• Stays at high CFM	• "R" missing/not connected at motor • Is fan in delay mode? - wait until delay time complete • Perform motor/control replacement check
• Blower won't shut off	• Current leakage from controls into G, Y or W? Check for Triac switched thermostat or solid-state relay
Excessive noise	• Determine if it's air noise, cabinet, duct or motor noise; interview customer, if necessary
• Air noise	• High static creating high blower speed? - Is airflow set properly? - Does removing filter cause blower to slow down? Check filter - Use low-pressure drop filter - Check/correct duct restrictions

Symptom	Cause/Procedure
• Noisy blower or cabinet	• Check for loose blower housing, panels, etc. • High static creating high blower speed? - Check for air whistling through seams in ducts, cabinets or panels - Check for cabinet/duct deformation
• "Hunts" or "puffs" at high CFM (speed)	• Does removing panel or filter reduce "puffing"? - Reduce restriction - Reduce max. airflow
Evidence of Moisture	
• Motor failure or malfunction has occurred and moisture is present	• Replace motor and **Perform Moisture Check**
• Evidence of moisture present inside air mover	• **Perform Moisture Check**

Do	Don't
• Check out motor, controls, wiring and connections thoroughly before replacing motor	• Automatically assume the motor is bad.
• Orient connectors down so water can't get in - Install "drip loops"	• Locate connectors above 7 and 4 o'clock positions
• Use authorized motor and model #'s for replacement	• Replace one motor or control model # with another (unless an authorized replacement)
• Keep static pressure to a minimum: - Recommend high efficiency, low static filters - Recommend keeping filters clean. - Design ductwork for min. static, max. comfort - Look for and recommend ductwork improvement, where necessary	• Use high pressure drop filters some have ½" H20 drop! • Use restricted returns
• Size the equipment wisely	• Oversize system, then compensate with low airflow
• Check orientation before inserting motor connectors	• Plug in power connector backwards • Force plugs

Moisture Check

- Connectors are oriented "down" (or as recommended by equipment manufacturer)
- Arrange harness with "drip loop" under motor
- Is condensate drain plugged?
- Check for low airflow (too much latent capacity)
- Check for undercharged condition
- Check and plug leaks in return ducts, cabinet

Comfort Check

- Check proper airflow settings
- Low static pressure for lowest noise
- Set low continuous-fan CFM
- Use humidistat and 2-speed cooling units
- Use zoning controls designed for ECM that regulate CFM
- Thermostat in bad location?

Replacing ECM Control Module

To replace the control module for the GE variable-speed indoor blower motor you need to take the following steps:

1. You MUST have the correct replacement module. The controls are factory programmed for specific operating modes. Even though they look alike, different modules may have completely different functionality.

USING THE WRONG CONTROL MODULE VOIDS ALL PRODUCT WARRANTIES AND MAY PRODUCE UNEXPECTED RESULTS.

2. Begin by removing AC power from the furnace or air handler being serviced. **DO NOT WORK ON THE MOTOR WITH AC POWER APPLIED.** To avoid electric shock from the motor's capacitors, disconnect power and wait at least 5 minutes before opening motor.

3. It is usually not necessary to remove the motor from the blower assembly. However, it is recommended that the whole blower assembly, with the motor, be removed from the furnace/air handler. (Follow the manufacturer's procedures). Unplug the two cable connectors to the motor. There are latches on each connector. **DO NOT PULL ON THE WIRES.** The plugs remove easily when properly released.

4. Locate the two standard ¼" hex head bolts at the rear of the control housing (at the back end of the control opposite the shaft end). *Refer to Figure 10.* Remove these two bolts from the motor and control assembly while holding the motor in a way that will prevent the motor or control from falling when the bolts are removed. If an ECM2.0 control is being replaced (recognized by an aluminum casting rather that a deep-drawn black steel can housing the electronics), remove only the hex-head bolts. **DO NOT REMOVE THE TORX-HEAD SCREWS.**

5. The control module is now free of mechanical attachment to the motor endshield but is still connected by a plug and three wires inside the control. Carefully rotate the control to gain access to the plug at the control end of the wires. With thumb and forefinger, reach the latch holding the plug to the control and release it by squeezing the latch tab and the opposite side of the connector plug and gently pulling the plug out of the connector socket in the control. **DO NOT PULL ON THE WIRES. GRIP THE PLUG ONLY.**

6. The control module is now completely detached from the motor. Verify with a standard ohmmeter that the resistance from each motor lead (in the motor plug just removed) to the motor shell is >100K ohms. *Refer to Figure 11.* (Measure to unpainted motor end plate.) If any motor lead fails this test, do not proceed to install the control module. **THE MOTOR IS DEFECTIVE AND MUST BE REPLACED.** Installing the new control module will cause it to fail also.

7. Verify that the replacement control is correct for your application. Refer to the manufacturer's authorized replacement list. **USING THE WRONG CONTROL WILL RESULT IN IMPROPER OR NO BLOWER OPERATION.** Orient the control module so that the 3-wire motor plug can be inserted into the socket in the control. Carefully insert the plug and press it into the socket until it latches. **A SLIGHT CLICK WILL BE HEARD WHEN PROPERLY INSERTED.** Finish installing the replacement control per one of the three following paragraphs, 8a, 8b or 8c.

8a. **IF REPLACING AN ECM 2.0 CONTROL** (control in cast aluminum can with air vents on the back of the can) **WITH AN ECM 2.3 CONTROL** (control containing black potting for water protection in black deep-drawn steel case with no vents in the bottom of the can), locate the two through-bolts and plastic tab that are packed with the replacement control. Insert the plastic tab into the slot at the perimeter of the open end of the can so that the pin is located on the inside of the perimeter of the can. Rotate the can so that the tab inserts into the tab locator hole in the endshield of the motor. Using the two through-bolts provided with the replacement control, reattach the can to the motor.

THE TWO THROUGH-BOLTS PROVIDED WITH THE REPLACEMENT ECM 2.3 CONTROL ARE SHORTER THAN THE BOLTS ORIGINALLY REMOVED FROM THE ECM 2.0 CONTROL AND MUST BE USED IF SECURE ATTACHMENT OF THE CONTROL TO THE MOTOR IS TO BE ACHIEVED.
DO NOT OVERTIGHTEN THE BOLTS.

8b. **IF REPLACING AN ECM 2.3 CONTROL WITH AN ECM 2.3 CONTROL**, the plastic tab and shorter through-bolts are not needed. The control can be oriented in two positions 180° apart. **MAKE SURE THE ORIENTATION YOU SELECT FOR REPLACING THE CONTROL ASSURES THE CONTROL'S CABLE CONNECTORS WILL BE LOCATED DOWNWARD IN THE APPLICATION SO THAT WATER CANNOT RUN DOWN THE CABLES AND INTO THE CONTROL.** Simply orient the new control to the motor's endshield, insert bolts, and tighten. ***DO NOT OVERTIGHTEN THE BOLTS.***

8c. **IF REPLACING AN ECM 2.0 CONTROL WITH AN ECM 2.0 CONTROL** *(It is recommended that ECM 2.3 controls be used for all replacements),* the new control must be attached to the motor using through bolts identical to those removed with the original control. ***DO NOT OVERTIGHTEN THE BOLTS.***

9. Reinstall the blower/motor assembly into the HVAC equipment. Follow the manufacturer's suggested procedures.

10. Plug the 16-pin control plug into the motor. The plug is keyed. Make sure the connector is properly seated and latched.

11. Plug the 5-pin power connector into the motor. Even though the plug is keyed, **OBSERVE THE PROPER ORIENTATION. DO NOT FORCE THE CONNECTOR.** It plugs in very easily when properly oriented. **REVERSING THIS PLUG WILL CAUSE IMMEDIATE FAILURE OF THE CONTROL MODULE.**

12. Final installation check. Make sure the motor is installed as follows:
    a. Unit is as far INTO the blower housing as possible.
    b. Belly bands are not on the control module or covering vent holes.
    c. Motor connectors should be oriented between the 4 o'clock and 8 o'clock positions when the blower is positioned in its final location and orientation.
    d. Add a drip loop to the cables so that water cannot enter the motor by draining down the cables. *Refer to Figure 12.*

The installation is now complete. Reapply the AC power to the HVAC equipment and verify that the new motor control module is working properly. Follow the manufacturer's procedures for disposition of the old control module.

Figure 10
Control Disassembly

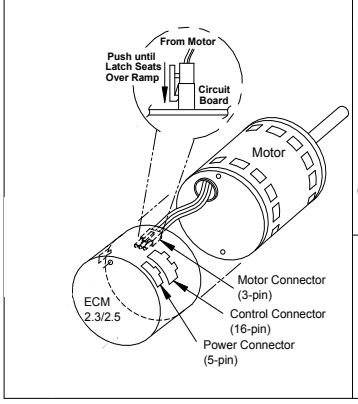

Figure 11
Winding Test

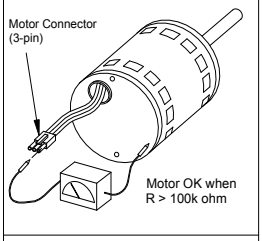
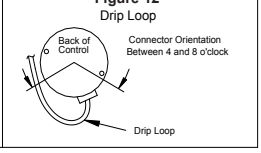
Figure 12
Drip Loop