INSTALLATION INSTRUCTIONS

WALL MOUNTED GAS/ELECTRIC

Models:

WG3S2-A	WG3S2-B	WG3S2-C
WG4S2-A	WG4S2-B	WG4S2-C
WG5S2-A	WG5S2-B	WG5S2-C

⚠ WARNING

READ ALL INSTRUCTIONS CAREFULLY BEFORE BEGINNING THE INSTALLATION.

THE INSTALLATION MUST COMPLY WITH THESE INSTRUCTIONS AND THE REQUIREMENTS OF ALL GOVERNING CODES AND ORDINANCES FOR THE INSTALLATION LOCATION.

IT IS THE RESPONSIBILITY OF INSTALLER TO KNOW AND UNDERSTAND ALL OF THESE REQUIREMENTS.

FAILURE TO DO SO COULD CREATE A HAZARD RESULTING IN PROPERTY DAMAGE, BODILY INJURY, OR DEATH.

C ETL US LISTED Intertek

Bard® SINCE 1914 Climate Control Solutions

Bard Manufacturing Company, Inc.
Bryan, Ohio 43506
www.bardhvac.com

Manual : 2100-587E
Supersedes: 2100-587D
Date: 7-26-16

CONTENTS

Page

Getting Other Information and Publications ... 4

Wall Mount Gas/Electric General Information .. 5

WG Series Model Nomenclature 5
Ventilation Options 5
Air Conditioning Module Options 6

Installation 9

1. Important 9
2. Application 9
3. Duct Work 9
4. High Altitude Applications 9
5. Transportation Damage 10
6. General Information 10
7. Wall Mounting Information 10
8. Mounting the Unit 10
9. Clearances 16
10. Vent Terminal and Combustion Air Inlet Hood ... 17
11. Optional Vertical Venting 17
12. Vent Resizing Instructions 18
13. Fresh Air Intake 18
14. Condensate Drain 18
15. Wiring – Main Power 19
16. Wiring – Low Voltage Wiring 20
17. Thermostats 20
18. Gas Supply and Piping 26

Page

19. Manifold Pressure Adjustment 27
20. Checking Gas Input Rate 27
21. Standard Orifice Sizing and High Altitude Derate 29
22. Conversion of Gas Input BTUH from High to Low Rating 31
23. Measuring Air Temperature Rise 31
24. Filters 32
25. Compressor Control Module 32
26 Phase Monitor 33
27. Lighting and Shutdown Instructions 34
28. Service Agency Procedures 35
29. Maintaining Unit in Good Working Order 35
30. Replacement Parts 36
31. Sequence of Operation – Heating 37
32. Sequence of Operation – Cooling 37
33. Indoor Blower Operation 38

Start Up 40

Application 40
Important Installer Note 40
High and Low Pressure Switch 40
Three Phase Scroll Compressor 40

Service 41

Compressor Solenoid 41
Fan Blade Setting Dimensions 41
Removal of Fan Shroud 41
ECM™ Motors 42

34. Pressure Service Ports 44
35. R-410A Refrigerant Charge 45
36. Low NOx Burner Assembly "N" Suffix Models Only – U.S. Installations Only 45

Index – Wiring Diagrams and Ladder Diagrams 46
Wiring Diagrams and Ladder Diagrams 47

FIGURES **Page**

Figure 1 Unit Dimensions 8
Figure 2A Mounting Instructions for WG3S2 11
Figure 2B Mounting Instructions for WG4S2 and WG5S2 12
Figure 3 Combustible Clearance 13
Figure 4 Wall Mounting Instructions..... 14
Figure 5 Wall Mounting Instructions..... 14
Figure 6 Common Wall Mounting Installations.... 15
Figure 7 Location of Vent Terminal in Shipping .. 16
Figure 8 Vent Terminal and Combustion Air Intake 17
Figure 9 Installation of Flexible Conduit 20
Figure 10A Low Voltage Wiring – No Vent 21
Figure 10B Low Voltage Wiring – CRV..... 22
Figure 10C Low Voltage Wiring – Economizer 23
Figure 10D Low Voltage Wiring – ERV..... 24
Figure 11 Gas Pipe Connection..... 25
Figure 12 Proper Piping Practice 26
Figure 13 Access Internal Filter..... 32
Figure 14 Lighting and Shutdown Instruction Label 34
Figure 15 Top View of Gas Control 35
Figure 16 Sequence of Operation – Electronic Blower Control 37
Figure 17 Furnace Control Board and Blower Control 38
Figure 18 Fan Blade..... 41
Figure 19 Control Disassembly 43
Figure 20 Winding Test..... 43
Figure 21 Drip Loop 43
Figure 22 Low NOx Insert 45

TABLES **Page**

Table 1 Specifications..... 7
Table 2 Minimum Installation Clearances..... 16
Table 3 Thermostat Wire Size..... 20
Table 4 Wall Thermostat..... 20
Table 5 Length of Standard Pipe Threads..... 26
Table 6 Gas Pipe Sizes – Natural Gas 26
Table 7 Natural Gas Derate Capacities for All Models 29
Table 8 Natural Gas Orifice Tables 30
Table 9 Indoor Blower Performance 38
Table 10 Integrated Furnace and Blower Control Operation 39
Table 11 Fan Blade Dimensions..... 41
Table 12 Cooling Pressures..... 44

GETTING OTHER INFORMATION AND PUBLICATIONS

These publications can help when installing the furnace. They can usually be found at the local library or purchased directly from the publisher. Be sure to consult the current edition of each standard.

National Fuel Gas Code .....ANSI Z223.1 / NFPA 54

National Electrical Code .....ANSI / NFPA 70

Standard for the Installation .....ANSI / NFPA 90A
of Air Conditioning and Ventilating Systems

Standard for Warm Air ..... ANSI / NFPA 90B
Heating and Air Conditioning Systems

Standard for Chimneys, ...NFPA 211
Fireplaces, Vents, and Solid Fuel Burning Appliances

Load Calculation for .....ACCA Manual J
Residential Winter and Summer Air Conditioning

Duct Design for Residential ..... ACCA Manual D
Winter and Winter Air Conditioning and Equipment Selection

Canadian Electrical Code.....CSA C22.1

Canadian Installation Code ..... CAN/CGA B149

FOR MORE INFORMATION, CONTACT THESE PUBLISHERS:

ACCA **Air Conditioning Contractors of America**
1712 New Hampshire Avenue, NW
Washington, DC 20009
Telephone: (202) 483-9370

ANSI **American National Standards Institute**
11 West Street, 13th Floor
New York, NY 10036
Telephone: (212) 642-4900
Fax: (212) 302-1286

ASHRAE **American Society of Heating Refrigerating, and Air Conditioning Engineers, Inc.**
1791 Tullie Circle, NE.
Atlanta, GA 30329-2305
Telephone: (404) 636-8400
Fax: (404) 321-5478

NFPA **National Fire Protection Association**
Batterymarch Park
P.O. Box 9101
Quincy, MA 02269-9901
Telephone: (800) 344-3555
Fax: (617) 984-7057

CSA **Canadian Standards Association**
178 Rexdale Boulevard
Rexdale, Ontario
Canada. M9W 1R3
Telephone: (416) 447-4044

BARD MANUFACTURING COMPANY, INC.
BRYAN, OHIO 43506 USA

MODEL NUMBER NOMENCLATURE

WG 4 S 2 – A X C X X X X X X

MODEL
Wall Mount
Gas/Electric

COOLING CAPACITY
3 = 3 ton
4 = 4 ton
5 = 5 ton

Denotes Step Capacity

REVISION

FEATURE
(-) = Standard
(C) = Canada

VOLTAGE
A = 230/208-60-1
B = 230/208-60-3
C = 460-60-3

EMISSIONS
X = Standard
N = NOx Certified

HEATING INPUT
A = 50,000
B = 75,000
C = 100,000
D = 125,000*

*125,000 BTU input model is not NOx certified.

VENT
(See Table Below)

FILTER
X = 2″ Pleated (Standard)
W = 1″ Washable

COLOR
X = Beige
(Standard)
4 = Buckeye Gray

OUTLET
X = Front (Standard)
T = Top

COIL OPTIONS
X = Standard
1 = Phenolic coated evaporator
2 = Phenolic coated condenser
3 = Phenolic coated both coils

CONTROL OPTIONS
(See Table page 6)

VENTILATION OPTIONS

Description	Factory Installed Code No.	Field Installed Part No.
Blank-Off Plate	B	WGSBOP-5
Commercial Ventilator – Multiple Position	V	WGSCRVMP-5
Economizer – Fully Modulating ①	E	WGSEIFM-5
Energy Recovery Ventilator – 230 Volt	R	WGSERV-A5A
Energy Recovery Ventilator – 460 Volt	R	WGSERV-C5A

① Low ambient control is required with economizer for low temperature compressor operation.

AIR CONDITIONING MODULE OPTIONS

CCM ①	HPC ②	LPC ③	LAC ④	Factory Installed Code	Field Installed Part
STD	STD	STD		X	N/A
STD	STD	STD	--	H	CMA-28

STD = Standard equipment

① CCM Compressor control module has adjustable 30 second to 5 minute delay-on-break timer. On initial power up, or any time the power is interrupted, the delay-on-make will be 2 minutes plus 10% of the delay-on-break setting. There is no delay-on-make during routine operation of the unit. The module also provides the lockout feature (with 1 retry) for high and/or low pressure controls, and a 2 minute timed bypass for low pressure control.

② HPC High pressure control is auto reset. Always used with compressor control module (CCM) which is included. See note ①.

③ LPC Low pressure control is auto reset. Always used with compressor control module (CCM) which is included. See note ①.

④ LAC Low ambient control permits cooling operation down to 0°F.

⚠ CAUTION

During the initial firing of the burners there will probably be some amount of smoke issued to the circulating air stream as the result of residual oil burning off of the heat exchanger tubes. This oil is required during the forming process of the stainless steel heat exchanger tubes to facilitate the bending. OSHA or the National Toxicology Program does not list the oil as a carcinogen. In vapor form this may be irritating to the eyes or could cause headaches. This is a one-time occurrence, and ventilation of the space may be required depending upon the space being conditioned.

TABLE 1
SPECIFICATIONS

Models	WG3S2-A	WG3S2-B	WG3S2-C	WG4S2-A	WG4S2-B	WG4S2-C	WG5S2-A	WG5S2-B	WG5S2-C
Electrical Rating – 60 Hz	230/208-60-1	230/208-60-3	460-60-3	230/208-60-1	230/208-60-3	460-60-3	230/208-60-1	230/208-60-3	460-60-3
Operating Voltage Range	197-253	187-253	414-506	197-253	187-253	414-506	197-253	187-253	414-506
Minimum Circuit Ampacity	27	23	12	36	27	14	45	31	15
* Field Wire Size	8	10	14	8	10	12	8	8	12
Ground Wire Size	10	10	14	10	10	12	10	10	12
** Delay Fuse – Max.	40	30	15	45	40	20	60	45	20
Compressor									
Compressor Type	Scroll	Scroll	Scroll	Scroll	Scroll	Scroll	Scroll	Scroll	Scroll
Volts	230/208	230/208	460	230/208	230/208	460	230/208	230/208	460
Rated Load Amps	11.6/12.9	8.8/9.9	6.7	15.0/17.8	10.4/11.8	5.4	20.9/23.0	12.8/14.1	6.2
Branch Circuit Selection Current	15.3	11.7	5.8	21.2	14.1	6.5	27.2	16.5	7.2
Lock Rotor Amps	83	73	38	104	83	41	153	110	52
Fan Motor and Compressor									
Fan Motor – HP/RPM/SPD	1/3-850-2	1/3-850-2	1/3-850-1	1/3-850-2	1/3-850-2	1/3-850-1	1/3-850-2	1/3-850-2	1/3-850-1
Blower Motor – Amps	2.5	2.5	1.3	2.5	2.5	1.3	2.5	2.5	1.3
Fan – DIA/CFM	24" – 2700	24" – 2700	24" – 2700	24" – 2700	24" – 2700	24" – 2700	24" – 2700	24" – 2700	24" – 2700
Motor and Evaporator									
Blower Motor – HP/RPM/SPD	1/2 Variable	1/2 Variable	1/2 Variable	3/4 Variable	3/4 Variable	3/4 Variable	3/4 Variable	3/4 Variable	3/4 Variable
Blower Motor – Amps	3.6	3.6	3.6	4.7	4.7	4.7	6.0	6.0	6.0
CFM Cooling and E.S.P.	1100	1100	1100	1500	1500	1500	1700	1700	1700
Filter Sizes (Inches)	20 x 30 x 2	20 x 30 x 2	20 x 30 x 2	20 x 30 x 2	20 x 30 x 2	20 x 30 x 2	20 x 30 x 2	20 x 30 x 2	20 x 30 x 2
Charge (R-410A)	156	156	156	240	240	240	246	246	246

* 75° C Copper wire size

** Maximum time delay fuse or circuit breaker

FIGURE 1
Unit Dimensions

UNIT	A	B	C	D	E	F	G	H	I	J	K	L	M	N	O	P	Q	R
WG3S2	9.88	29.88	15.88	27.25	43.81	14.88	31.63	87.5	30	33.38	28.75	14.12	15.44	15.31	42.88	4.5	2.5	3.75
WG4S2/WG5S2							41.63	97.5		43.38	38.75							

UNIT	S	T	U	V	W	X	Y	Z	AA	BB	CC	DD	EE	FF	GG	HH	II
WG3S2	16	3.75	3.88	24.9	42	17.34	8.44	2.25	12.19	3.25	10	7.25	40.25	1.13	1.25	2.75	0.44
WG4S2/WG5S2		13.75		34.9													

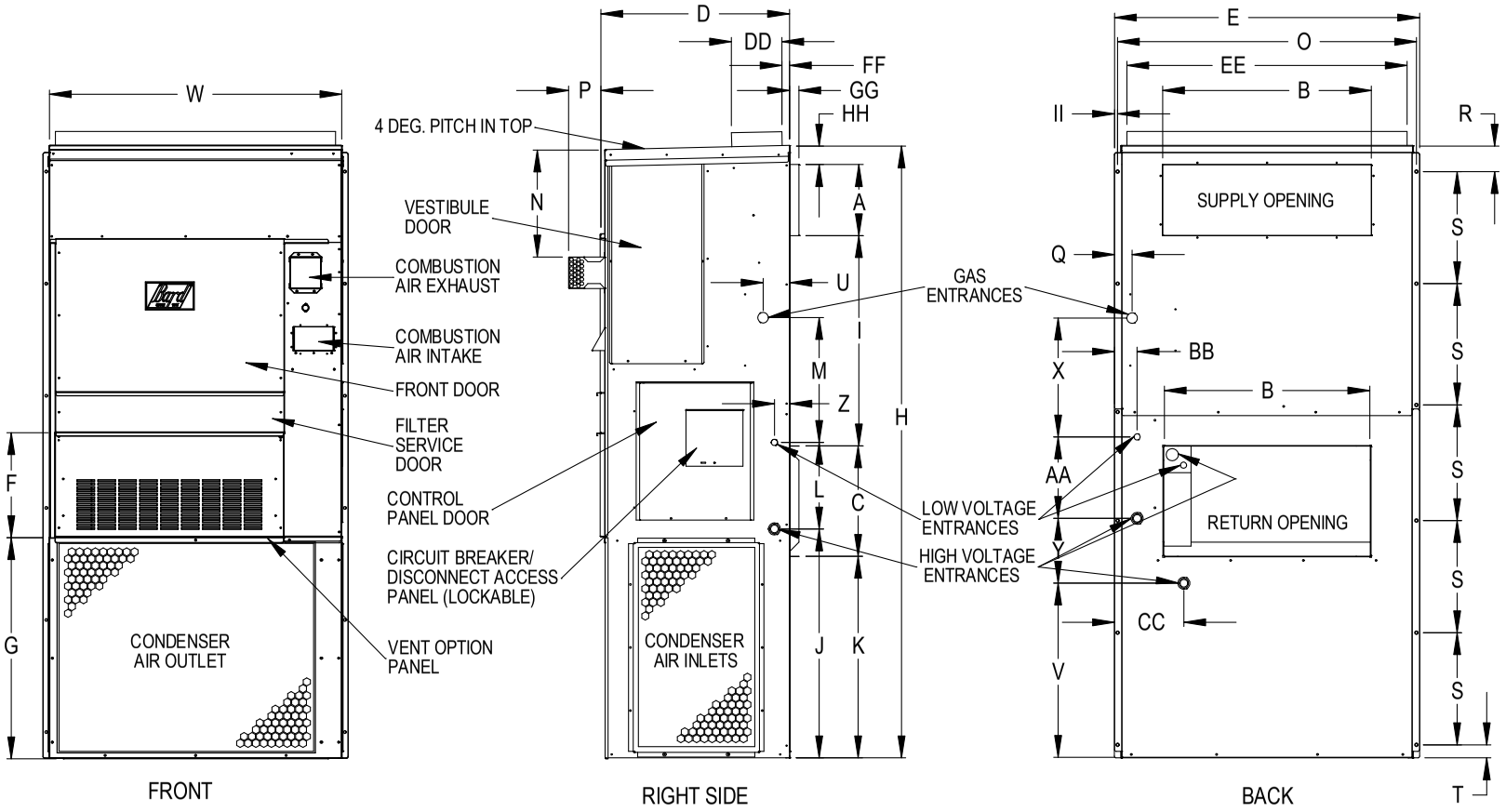

1. IMPORTANT

The equipment covered in this manual is to be installed by trained, experienced service and installation technicians. All duct work or portions thereof not in the conditioned space should be properly insulated in order to both conserve energy and prevent condensation or moisture damage.

2. APPLICATION

This is a fan-assisted forced air gas furnace with electric air conditioning for outdoor installation. A fan-assisted furnace is equipped with an integral mechanical means to draw products of combustion through the combustion chamber and heat exchanger. The furnace installation must conform with local building codes and ordinances or, in their absence, with the National Fuel Gas Code ANSI Z223.1 or CAN/CGA-B149.1, latest edition, and the National Electrical Code ANSI/NFPA-7 or CSA C22.1, latest edition. It is the personal responsibility and obligation of the purchaser to contact a qualified installer to assure that installation is adequate and is in conformance with governing codes and ordinances.

3. DUCT WORK

The unit is designed for use with or without duct work (see Warning on this page). Flanges are provided for attaching the supply and return ducts. These instructions explain the recommended method to install the air cooled self-contained electric air conditioning and gas heating unit and the electrical wiring connections and gas piping to the unit. The refrigerant system is completely assembled and charged. All internal wiring is complete.

These instructions and any instructions packaged with any separate equipment required to make up the entire heating/cooling system should be carefully read before beginning the installation. Note particularly “Starting Procedure” and any tags and/or labels attached to the equipment.

All duct work, supply and return, must be properly sized for the design airflow requirement of the equipment. Air Conditioning Contractors of America (ACCA) is an excellent guide to proper sizing.

Refer to Table 9 in this Manual for maximum static pressure available for duct design.

See Figure 3 and clearance information in Section 9 and Table 2 for additional information.

Design the duct work according to methods given by the Air Conditioning Contractors of America (ACCA). When duct runs through unheated spaces, it should be insulated with a minimum of 1" of insulation. Use insulation with a vapor barrier on the outside of the insulation. Flexible joints should be used to connect the duct work to the equipment in order to keep the noise transmission to a minimum.

⚠ WARNING

In all cases, there must be a metal duct connection made to the supply air flange, and a 1" clearance to combustibles must be maintained to this duct connection.

For free blow applications, a metal sleeve must be used in the wall opening itself, again maintaining a 1" clearance to combustibles.

Failure to use the sheet metal can cause fire resulting in property damage, injury, or death.

A 1” clearance to combustible material for the first 3’ of duct attached to the outlet air frame is required. See Wall Mounting Instructions and Figures 2, 2A, 3 and 3A for further details.

Ducts through the walls must be insulated and all joints taped or sealed to prevent air or moisture entering the wall cavity.

Some installations may not require any return air duct. A metallic return air grille is required with installations not requiring a return air duct. The spacing between louvers on the grille shall not be larger than 5/8”.

Any grille that meets with the 5/8” louver criteria may be used. It is recommended that Bard Return Air Grille or Return Filter Grille be installed when no return duct is used. Contact distributor or factory for ordering information. If using a return air filter grille, filters must be of sufficient size to allow a maximum velocity of 400 fpm.

NOTE: If no return air duct is used, applicable installation codes may limit this cabinet to installation only in a single story structure.

4. HIGH ALTITUDE APPLICATIONS

Ratings of gas utilization equipment are based on sea level operation and need not be changed for operation at elevations up to 6,000’. For operation at elevations above 6,000’ and in the absence of specific recommendations from the local authority having jurisdiction, equipment ratings shall be reduced as specified in Section 21.

5. TRANSPORTATION DAMAGE

All units are packed securely in shipping container. All units should be carefully inspected upon arrival for damage. In the event of damage, the consignee should:

1. Note on delivery receipt of any damage to container.
2. Notify carrier promptly, and request an inspection.
3. In case of concealed damage, the carrier must be notified as soon as possible within 15 days after delivery.
4. Claims for any damage, apparent or concealed, should be filed with the carrier, using the following supporting documents:
   A. Original Bill of Lading, certified copy or indemnity bond.
   B. Original paid freight bill of indemnity in lieu thereof.
   C. Original invoice or certified copy thereof showing trade and other discounts or deductions.
   D. Copy of the inspection report issued by carrier's representative at the time damage is reported to carrier.

6. GENERAL INFORMATION

Size of unit for proposed installation should be based on heat loss/heat gain calculations made according to methods of Air Conditioning Contractors of America (ACCA). The air duct should be installed in accordance with the Standards of the National Fire Protection Association for the Installation of Air Conditioning and Ventilating Systems of Other Than Residence Type, NFPA No. 90A, and Residence Type Warm Air Heating and Air Conditioning Systems, NFPA No. 90B. Where local regulations are at a variance with instructions, installer should adhere to local codes.

7. WALL MOUNTING INFORMATION

1. Two holes for the supply and return air openings must be cut through the wall as detailed in Figure 4.
2. On wood-frame walls, the wall construction must be strong and rigid enough to carry the weight of the unit without transmitting any unit vibration.
3. Concrete block walls must be thoroughly inspected to insure that they are capable of carrying the weight of the installed unit.

8. MOUNTING THE UNIT

1. These units are secured by wall mounting brackets which secure the unit to the outside wall surface at both sides. A bottom mounting bracket is provided for ease of installation but is not required.

⚠ CAUTION

If the bottom bracket is used, be certain the bracket is secured to the outside wall surface in a way sufficient to support the entire weight of the unit during installation until side mounting brackets are secured.

2. The WG3S2, WG4S2 and WG5S2 models are suitable for 0" clearance on the installation mounting wall and to the top. For all models the supply air duct flange and the first 3' of supply air duct require a minimum of 1" clearance to combustible material.

⚠ WARNING

Failure to provide the 1" clearance between the supply duct and a combustible surface for the first 3' of duct can result in fire causing damage, injury or death.

3. Locate and mark lag bolt locations and bottom mounting bracket location.
4. Mount bottom mounting bracket.
5. Hook top rain flashing under back bend of top. Top rain flashing is shipped secured to the right side of the back.
6. Position unit in opening and secure with 5/16 lag bolts; use 7/8" diameter flat washers on the lag bolts. Use lag bolts long enough to support the unit's weight when mounted to the structure. This length may be dependant on the type of construction.
7. Secure rain flashing to wall and caulk across entire length of top (see Figure 3).
8. On side-by-side installations, maintain a minimum of 20" clearance on right side to allow access to control panel and burner compartment, and to allow proper airflow to the outdoor coil. Additional clearance may be required to meet local or national codes.

FIGURE 2A
Mounting Instructions for WG3S2

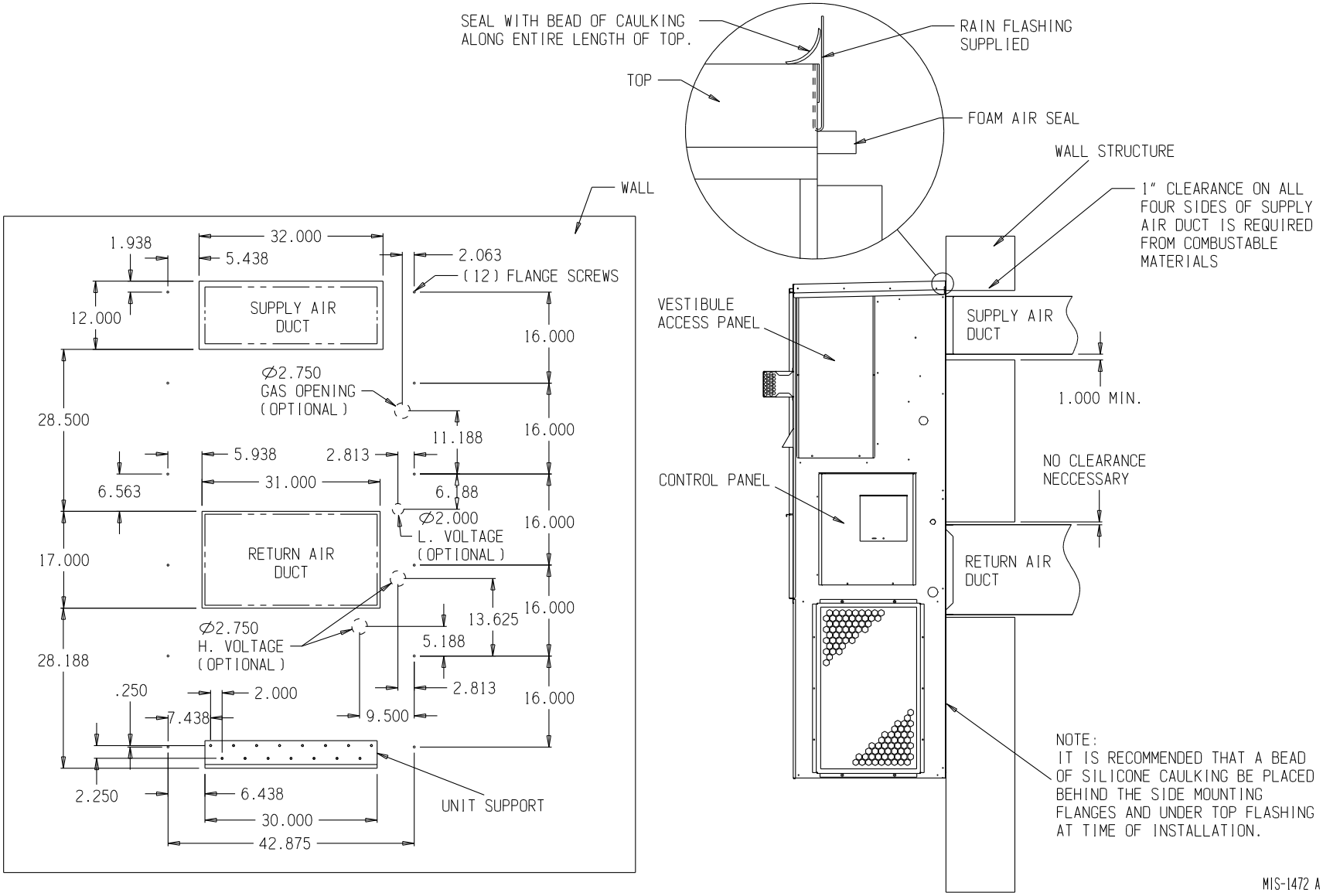

FIGURE 2B
Mounting Instructions for WG4S2 and WG5S2

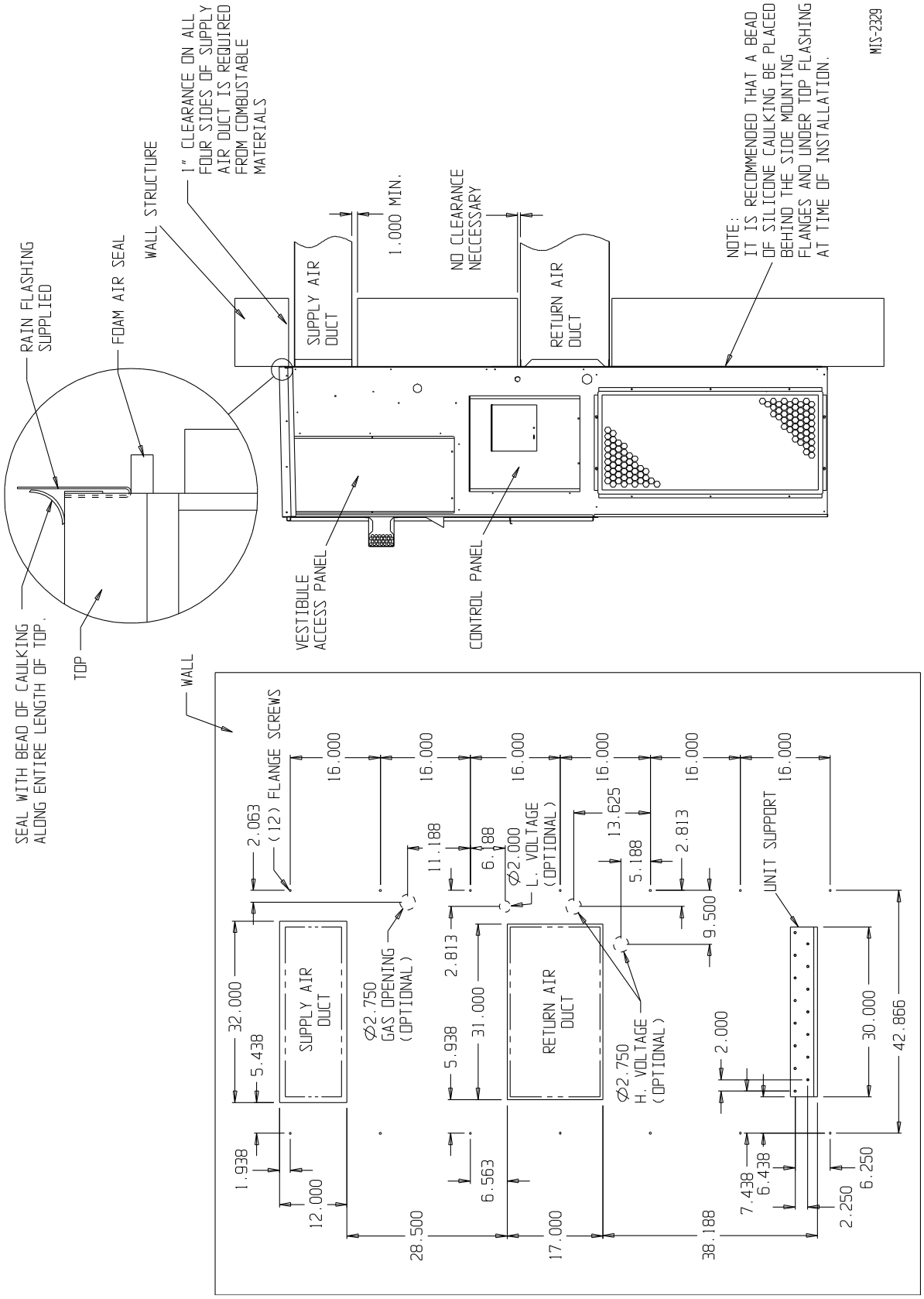

FIGURE 3
Combustible Clearance

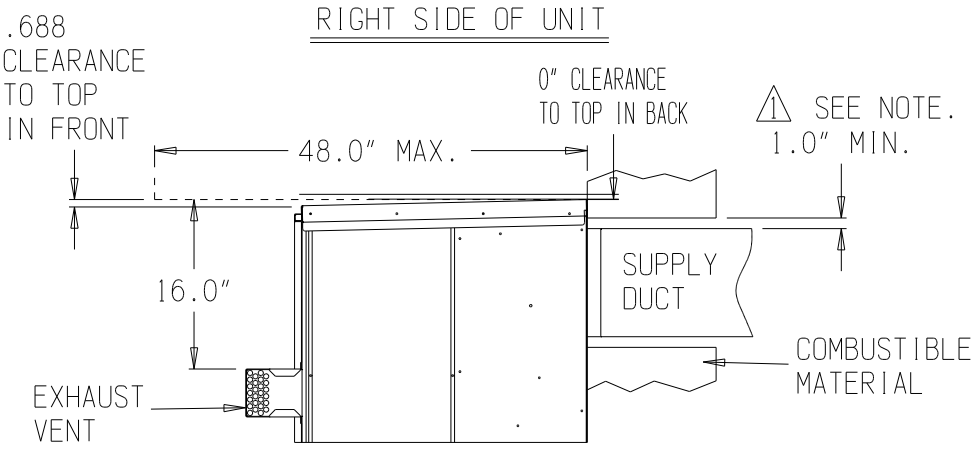

1 SIDE SECTION VIEW OF SUPPLY AIR DUCT FOR WALL MOUNTED UNIT SHOWING 1.0" CLEARANCE TO ALL COMBUSTIBLE SURFACES.

MIS-1714

⚠ WARNING

A ***minimum*** of 1" clearance must be maintained between the supply air duct and combustible materials. This is required for the first 3' of ducting.

It is important to insure that the 1" minimum spacing is maintained at all points.

Failure to do this could result in overheating the combustible material and may result in a fire causing damage, injury or death.

FIGURE 4
Wall Mounting Instructions

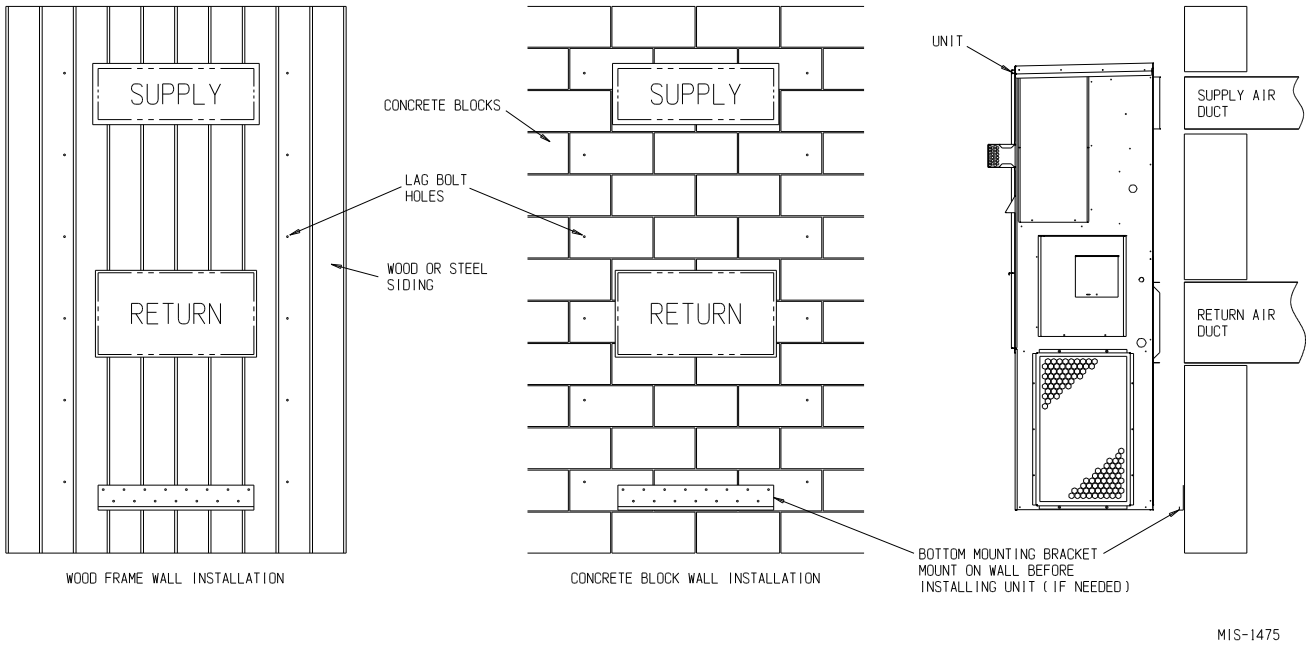

FIGURE 5
Wall Mounting Instructions

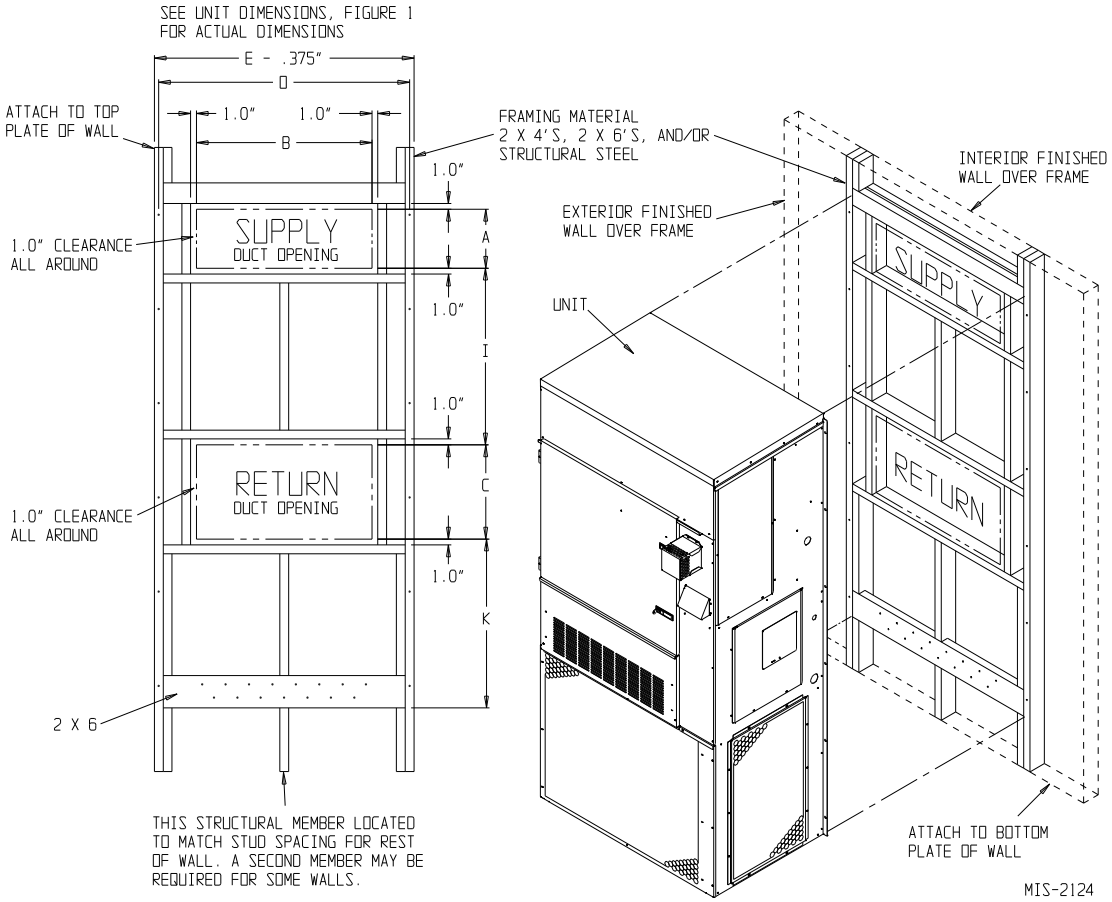

FIGURE 6
Common Wall Mounting Installations

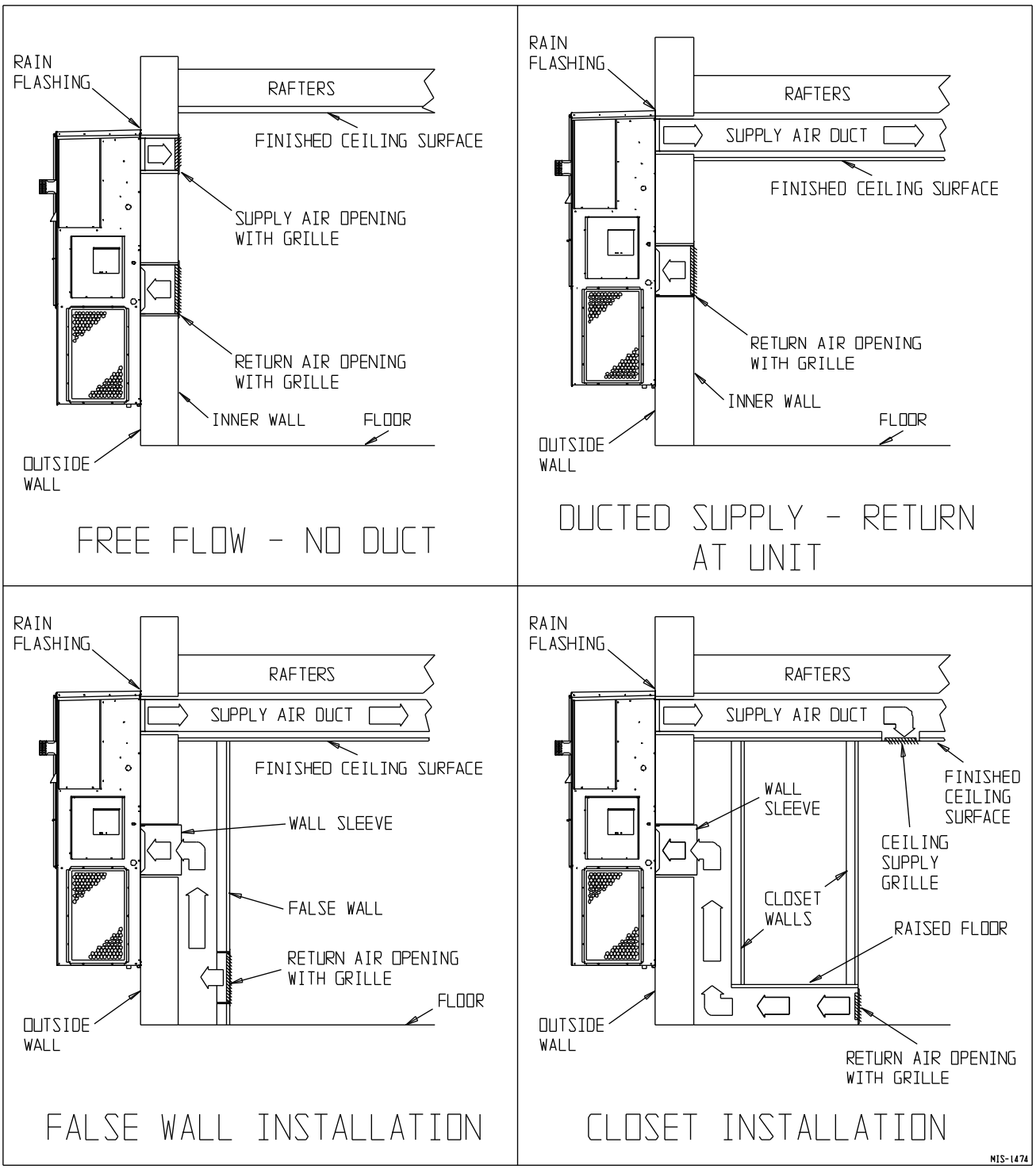

9. CLEARANCES

Minimum clearances, as specified in Table 2, must be maintained from adjacent structures to provide adequate fire protection, adequate combustion air and room for service personnel.

While minimum clearances are acceptable for safety reasons, they may not allow adequate air circulation around the unit for proper operation in the cooling mode. Whenever possible, it is desirable to allow additional clearance, especially around the condenser inlet and discharge openings. DO NOT install the unit in a location that will permit discharged air from the condenser to recirculate to the condenser inlet.

⚠ WARNING

Clearances from combustible materials must be maintained as specified. Failure to maintain clearances could cause fire resulting in property damage, injury, or death.

TABLE 2
Minimum Installation Clearances

Outlet Duct (from combustible materials)	1" first 3'
Vent Terminal (from combustible materials)	* 17"
Condenser Inlet	20"
Top	See Figure 3
Burner Service	20"
Combustible Base (Wood or Class A, B or C roof covering material)	0"
* See Figure 3	

FIGURE 7
Location of Vent Terminal in Shipping

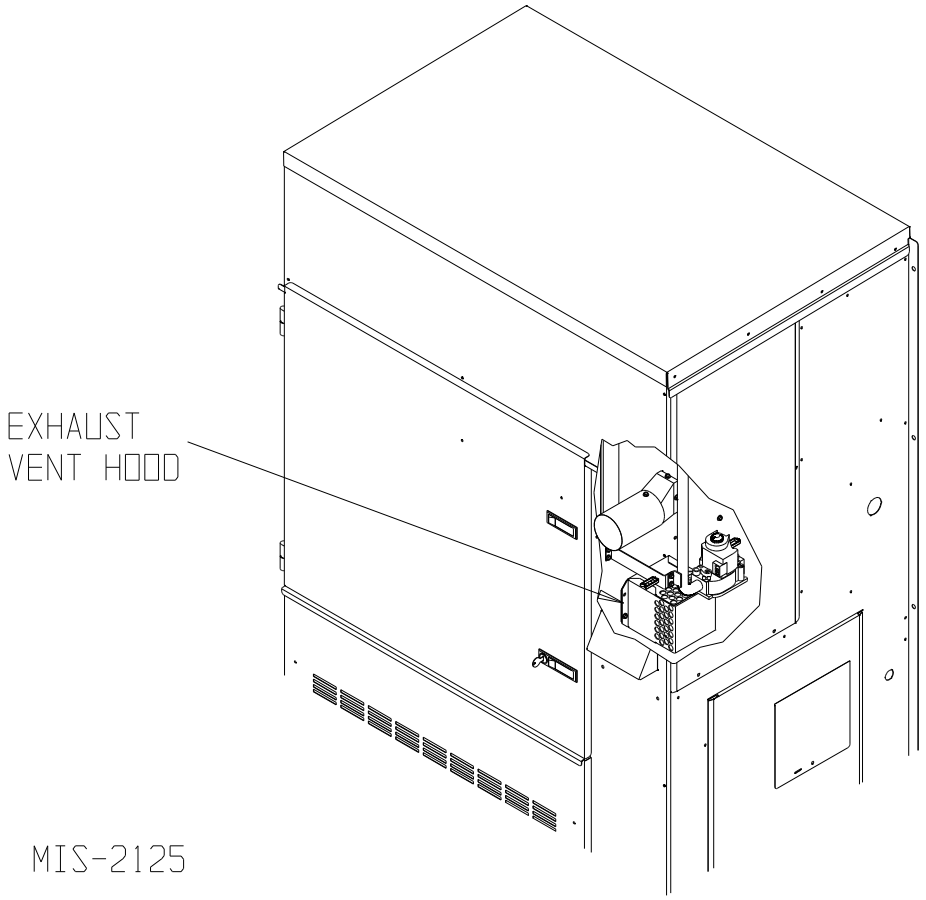

10. VENT TERMINAL AND COMBUSTION AIR INLET HOOD

The vent terminal is shipped in the burner compartment (see Figure 7). Remove the two shipping screws and separate the two-piece assembly. Install the vent terminal by using the four screws provided. **Make sure gasket is in place (**see Figure 8). The combustion air intake hood is factory installed.

11. OPTIONAL VERTICAL VENTING

With the optional vertical venting kit (VVK-5), this unit may be vented vertically through a roof or overhang. The kit includes a stainless steel transition drain tee, silicone sealant and drain tubing.

If unit is installed with vertical vent kit, annually inspect the vent system and drain. Replace any portion of the vent system that shows signs of deterioration. Make sure drain is open and free of obstruction.

⚠ CAUTION

Vent terminal must be installed as shown in Figure 8 for proper operation of the heating system.

NOTE: The inner vent hood gasket is designed to stretch over and seal around the combustion air blower outlet. This is a very critical seal to prevent water and flue products from entering the unit. Care must be taken to insure this gasket is in place and sealing properly.

FIGURE 8
Vent Terminal and Combustion Air Intake

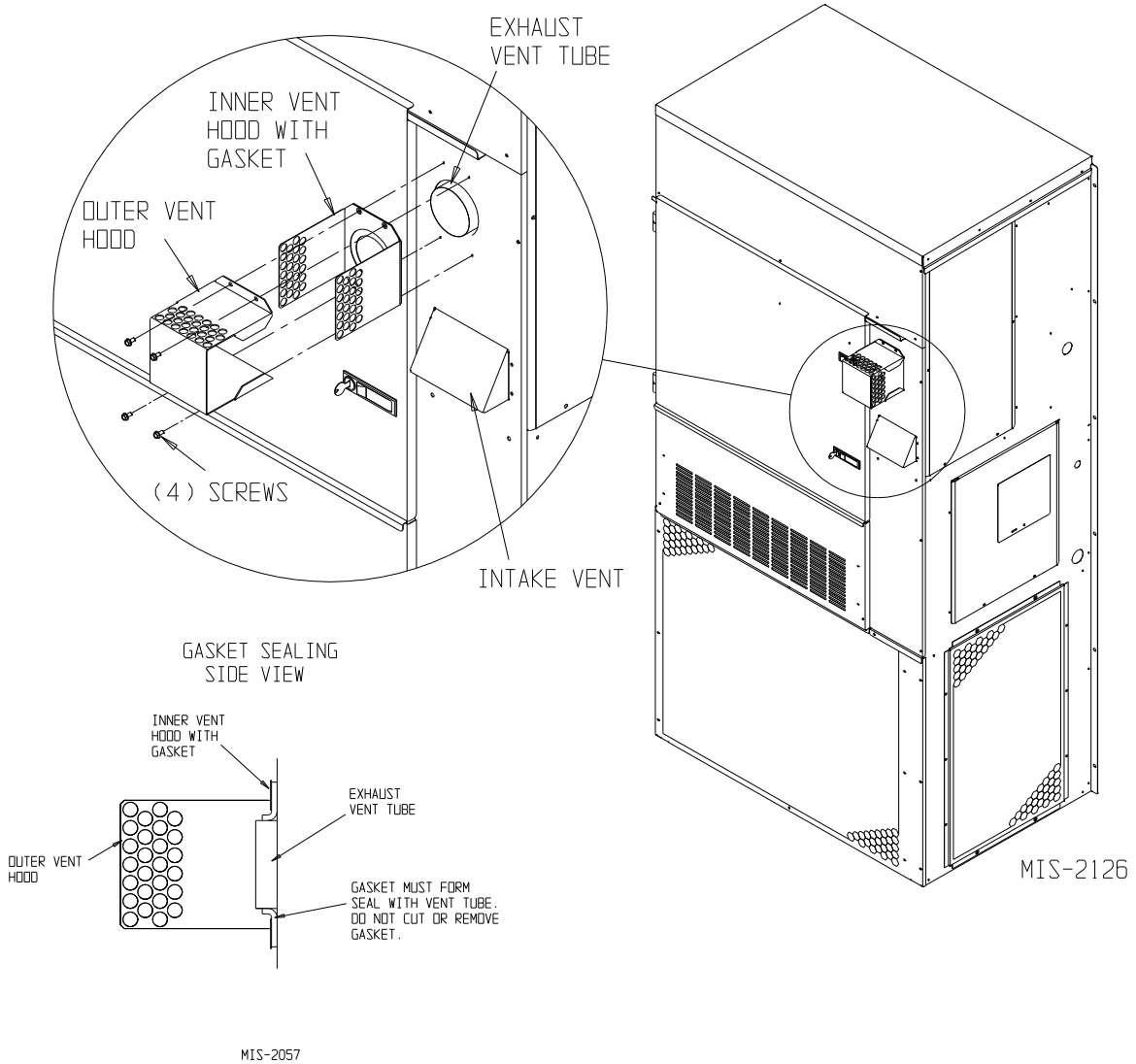

12. VENT RESIZING INSTRUCTIONS

When an existing furnace is removed from a venting system servicing other appliances, the venting system is likely to be too large to properly vent the remaining attached appliances.

The following steps shall be followed with each of the appliances remaining connected to the common venting system, placed in operation one at a time while the other appliances remaining connected to the common venting system are not in operation.

1. Seal any unused openings in the venting system.
2. Inspect the venting system for proper size and horizontal pitch, as required in the National Fuel Gas code, ANSI Z223.1 or the CAN/CGA B149 Installation Codes and these instructions. Determine that there is no blockage or restriction, leakage, corrosion and other deficiencies which could cause an unsafe condition.
3. In so far as is practical, close all building doors and windows and all doors between the space in which the appliance(s) connected to the venting system are located and other spaces of the building. Turn on clothes dryers and any appliances not connected to the venting system. Turn on any exhaust fans, such as range hoods and bathroom exhausts, so they will operate at maximum speed. Do not operate a summer exhaust fan. Close fireplace dampers.
4. Follow the lighting instructions. Place the appliance being inspected in operation. Adjust thermostat so appliance shall operate continuously.
5. Test for draft hood equipped appliance spillage at the draft hood relief opening after 5 minutes of main burner operation. Use the flame of a match or candle.
6. After it has been determined that each appliance connected to the venting system properly vents when tested as outlined above, return doors, windows, exhaust fans, fireplace dampers and any other gas-burning appliances to their previous conditions of use.
7. If improper venting is observed during any of the above tests, the venting system must be corrected.

13. FRESH AIR INTAKE

All units are built with fresh air inlet slots punched in the service panel.

The default unit is built with blank-off plates installed. All capacity, efficiency and cost of operation information as required for Department of Energy "Energyguide" Fact Sheets is based upon the fresh air blank-off plate in place and is recommended for maximum energy efficiency.

One of several other ventilation options may be installed. Refer to model number and/or supplemental installation instructions.

14. CONDENSATE DRAIN

A plastic drain hose extends from the drain pan at the top of the unit down to the unit base. There are openings in the unit base for the drain hose to pass through. In the event the drain hose is connected to a drain system of some type, it must be an open or vented type system to assure proper drainage.

15. WIRING – MAIN POWER

⚠WARNING

For your personal safety, turn off electric power at service entrance panel before making any electrical connections. Failure to do so could result in electric shock or fire.

Refer to unit rating plate for wire sizing information and maximum fuse or circuit breaker size. Each outdoor unit is marked with a "Minimum Circuit Ampacity". This means that the field wiring used must be sized to carry that amount of current. All models are suitable only for connection with copper wire. Each unit and/or wiring diagram will be marked "*Use Copper Conductors Only*". These instructions ***must be*** adhered to. Refer to the National Electrical Code (NEC) for complete current carrying capacity data on the various insulation grades of wiring material. All wiring must conform to NEC and all local codes.

The electrical data lists fuse and wire sizes (75° C copper) for all models.

The unit rating plate lists a "Maximum Time Delay Relay Fuse" or circuit breaker that is to be used with the equipment. The correct size must be used for proper circuit protection and also to assure that there will be no nuisance tripping due to the momentary high starting current of the compressor motor.

The disconnect access door on this unit may be locked to prevent unauthorized access to the disconnect. To convert for the locking capability, bend the tab located in the bottom left hand corner of the disconnect opening under the disconnect access panel straight out. This tab will now line up with the slot in the door. When shut, a padlock may be placed through the hole in the tab preventing entry.

See "Start Up" section for important information on three phase scroll compressor start ups.

⚠WARNING

Failure to provide an electrical power supply shut off means could result in electric shock or fire.

Electrical Grounding

When installed, the furnace must be electrically grounded in accordance with local codes or in the absence of local codes, with the National Electrical Code, ANSI/NFPA 70, or Canadian Electrical Code, CSA22.1, latest edition. Use a copper wire from green ground wire on the furnace to a grounded connection in the service panel or a properly driven and electrically grounded ground rod. See Table 1 for proper ground wire size.

⚠WARNING

Failure to provide a proper electrical ground could result in electric shock or fire.

Field-Installed Equipment

Wiring to be done in the field between the furnace and devices not attached to the furnace, or between separate devises which are field installed and located, shall conform with the temperature limitation for Type T wire {63° F rise (36° C)} when installed in accordance with the manufacturer's instructions.

Installation of Flexible Conduit Through Return Air Opening

NOTE: To allow proper clearance between the control panel and any vent options, 90° conduit fittings must be used on the back of the control panel.

Installing Conduit (see Figure 9)

1. Remove conduit access panel if required to gain access to area behind control panel.
2. Remove low voltage and high voltage knockouts located in rear of control panel.
3. Run low voltage conduit through 7/8 bushing located in conduit entrance plate and secure to low voltage opening in rear of control panel.
4. Run high voltage conduit through 1-3/4 bushing located in conduit entrance plate and secure to high voltage opening in rear of control panel.
5. Replace conduit access panel if required to complete installation.
6. Seal around conduit in conduit entrance plate.

FIGURE 9
Installation of Flexible Conduit

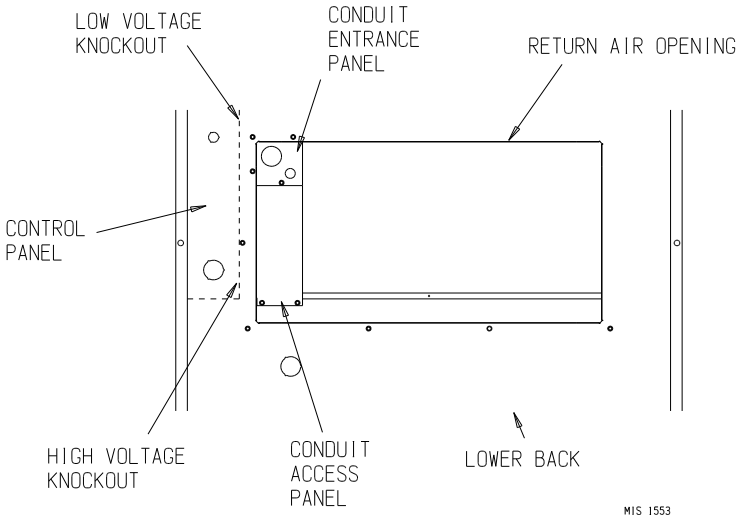

16. WIRING – LOW VOLTAGE WIRING

Low Voltage Connection

These units use a 24 volt AC low voltage circuit.
The "R" terminal is the *hot* terminal and the "C" terminal is *grounded*.
"G" terminal is the *fan input*.
"Y" terminal is the *economizer input (where equipped)*.
"Y1" terminal is the *compressor input*.
"Y2" terminal is the *compressor staging solenoid input*.
"R" terminal is 24 *VAC hot*.
"C" terminal is 24 *VAC grounded*.
"A" terminal is the *ventilation input*. This terminal energizes any factory or field installed vent option.
"2" terminal is the *alarm output*.
"W1" terminal is the *gas heat input*.

230/208 Volt Units

All models are equipped with dual primary voltage transformers. All equipment leaves the factory wired on 240V tap. For 208V operation, reconnect from 240V to 208V tap. The acceptable operating voltage range for the 240V and 208V taps are:

Tap	Range
240	253 – 206
208	220 – 187

NOTE: The voltage should be measured at the field power connection point in the unit and while the unit is operating at full load (maximum amperage operating condition).

460 Volt Units

All models are equipped with single primary voltage transformers and no rewiring is required.

Direct Digital Controls (DDC)

For total and proper control using DDC, a total of five controlled outputs are required (four if no ventilation is installed).

LOW VOLTAGE CONNECTIONS FOR DDC CONTROL	
Fan Only	Energize G
Cooling Mode (Low)	Energize G, Y1
Cooling Mode (High)	Energize G, Y1, Y2
Heating Mode	Energize W1
Ventilation	Energize G, A

17. THERMOSTATS

TABLE 3
Thermostat Wire Size

Transformer VA	FLA	Wire Gauge	Maximum Distance in Feet
50	2.1	20 gauge 18 gauge 16 gauge 14 gauge 12 gauge	45 60 100 160 250

TABLE 4
Wall Thermostat

Thermostat	Predominant Features
8403-058 (TH5220D1151)	2 stage Cool; 2 stage Heat Electronic Non-Programmable Auto or Manual changeover
8403-060 (1120-445)	3 stage Cool; 3 stage Heat Programmable/Non-Programmable Electronic HP or Conventional Auto or Manual changeover

FIGURE 10A
Low Voltage Wiring – No Vent

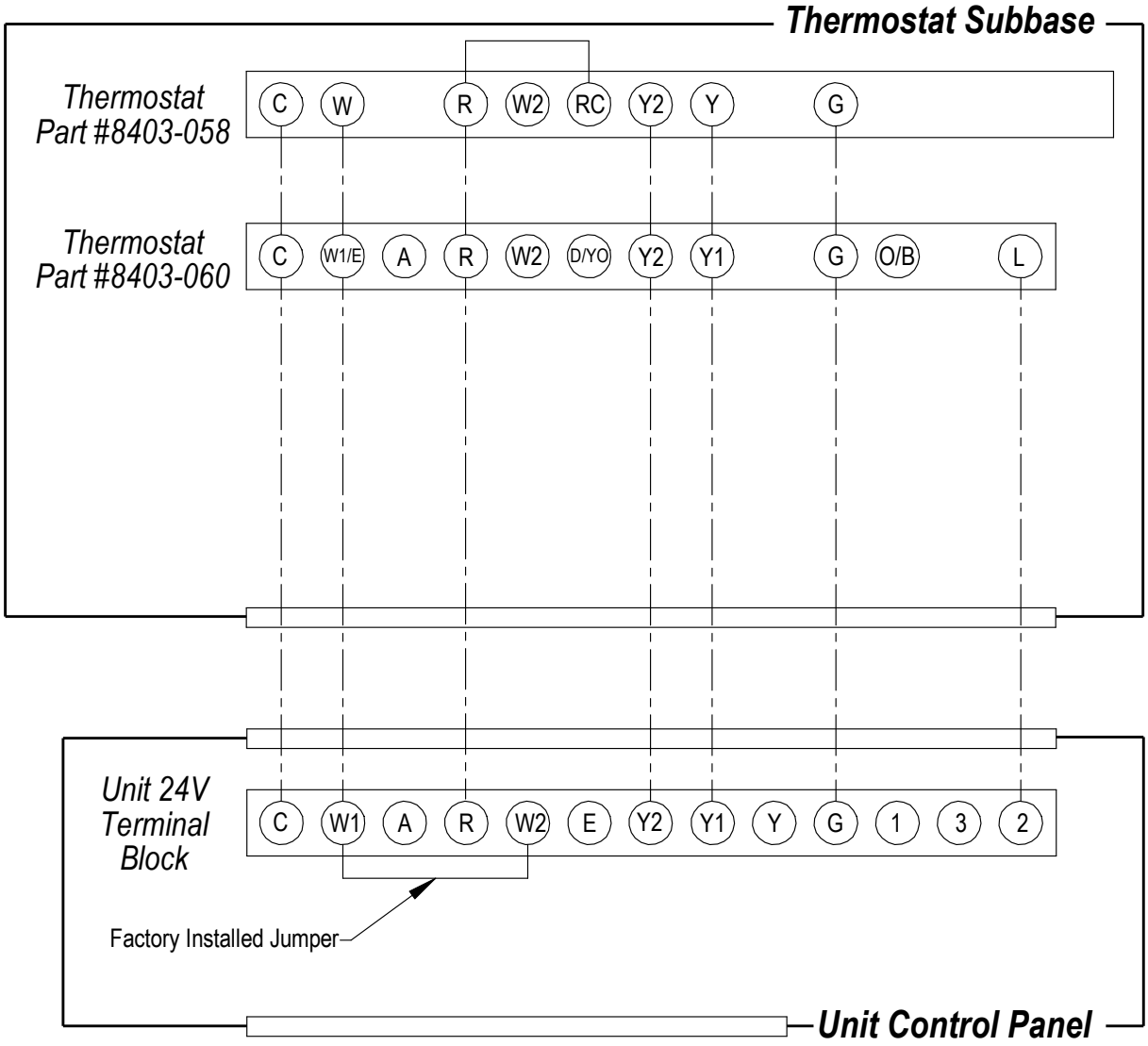

MIS-2330 D

FIGURE 10B
Low Voltage Wiring – Commercial Room Ventilator

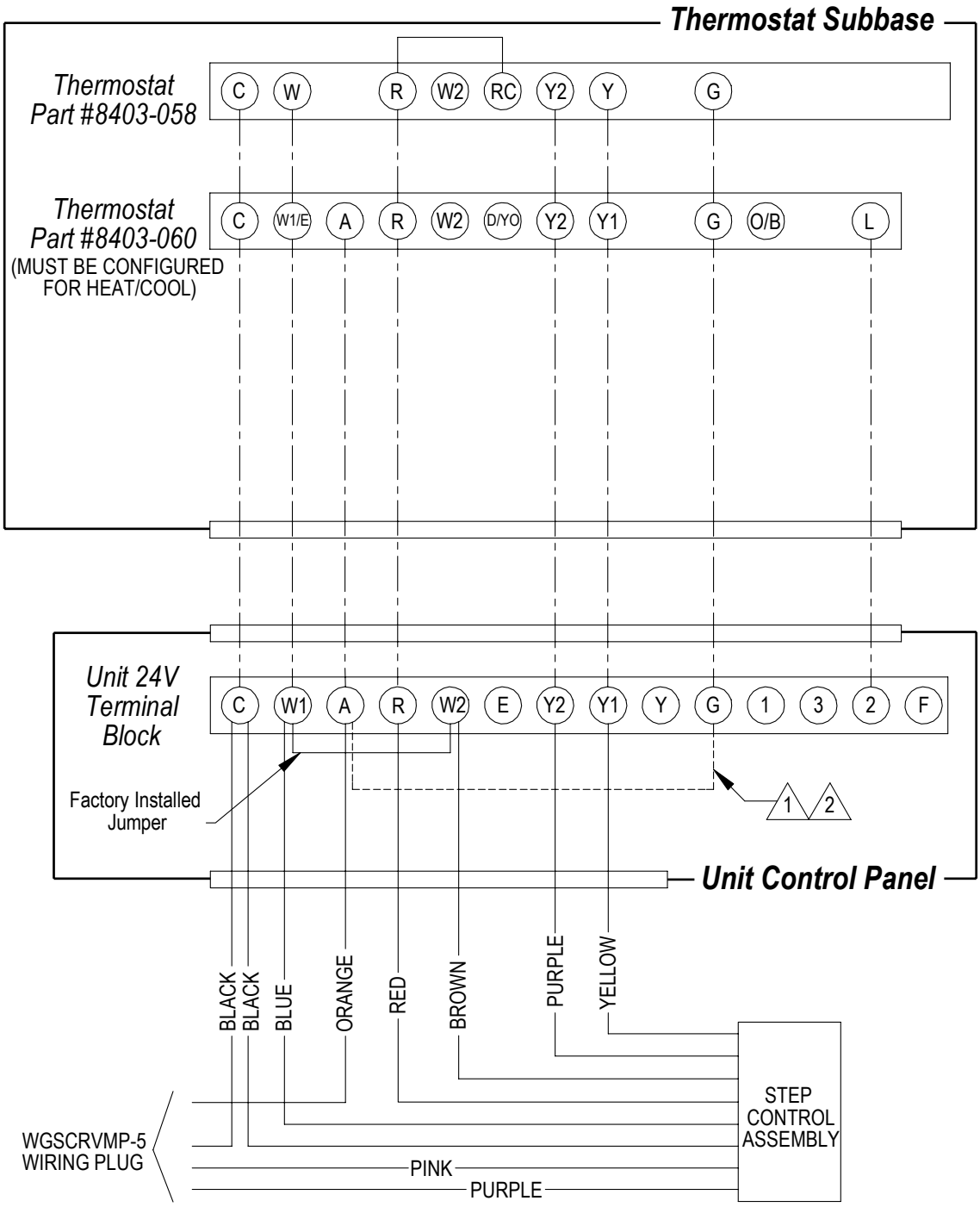

1 MUST INSTALL JUMPER FOR 8403-058 OR OTHER THERMOSTAT THAT DOES NOT HAVE OCCUPANCY OUTPUT.

2 INSTALL IF YOU REQUIRE VENTILATION ANYTIME BLOWER IS ON.

MIS-2433 F

FIGURE 10C
Low Voltage Wiring – Economizer

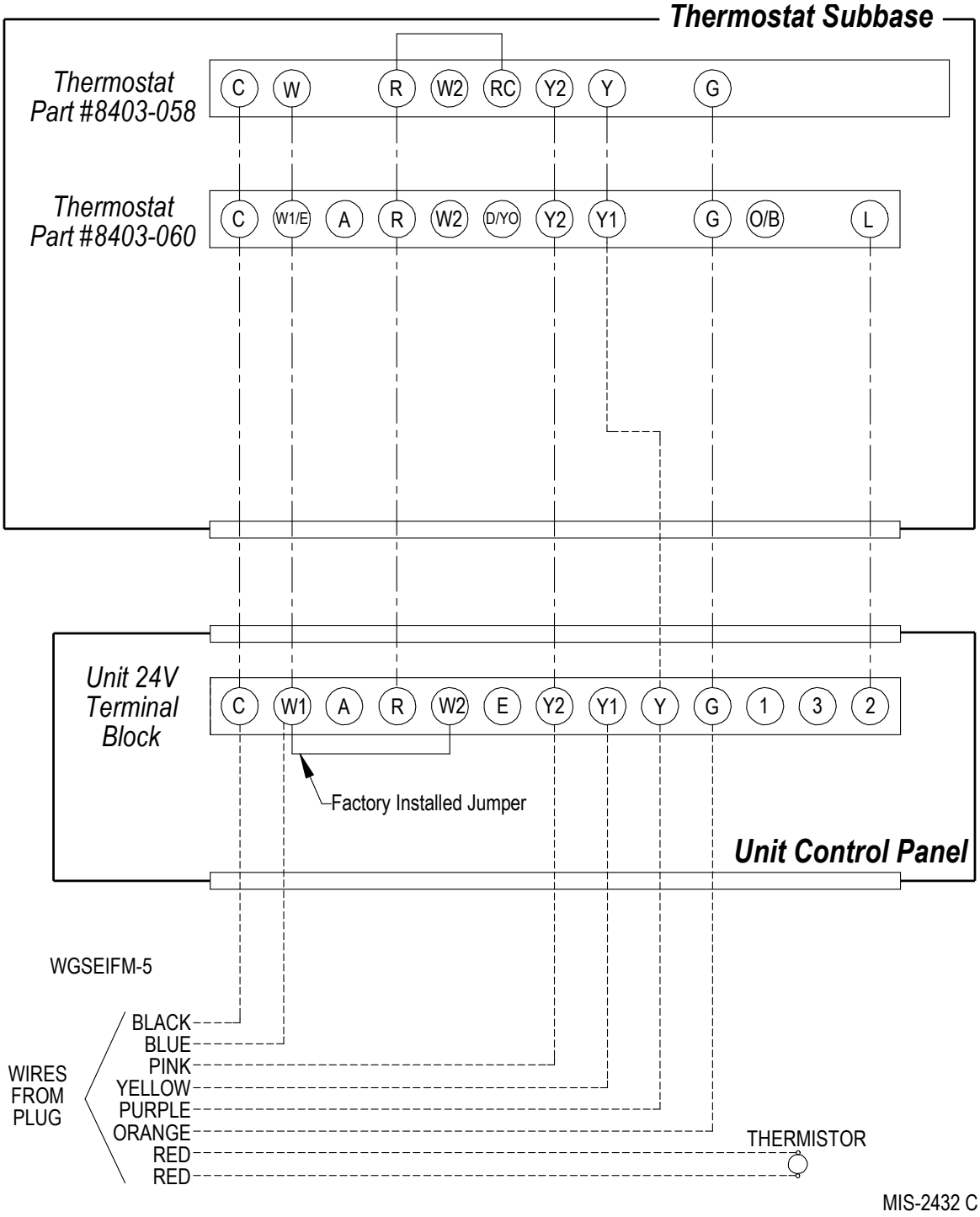

FIGURE 10D
Low Voltage Wiring – Energy Recovery Ventilator

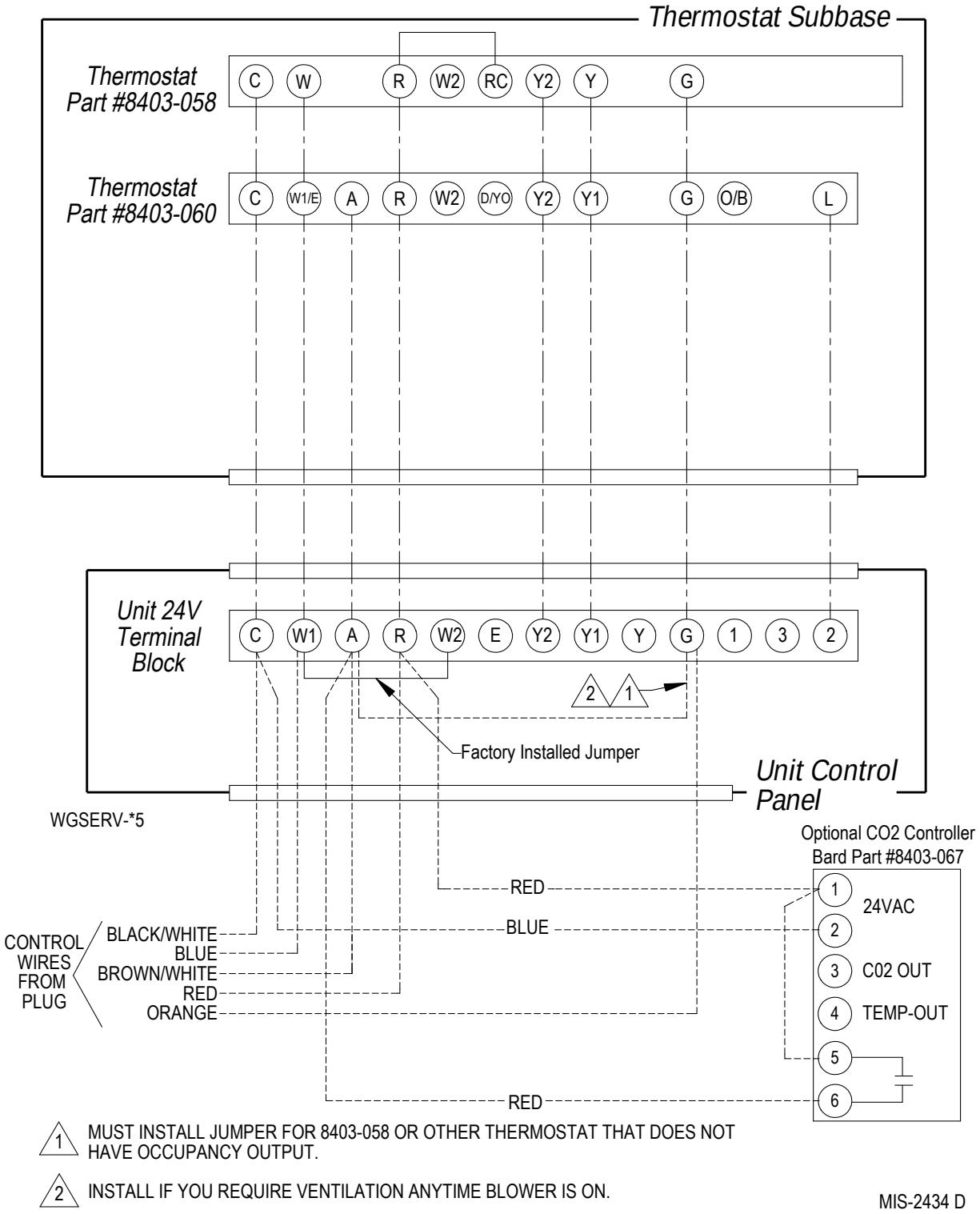

FIGURE 11
Gas Pipe Connection

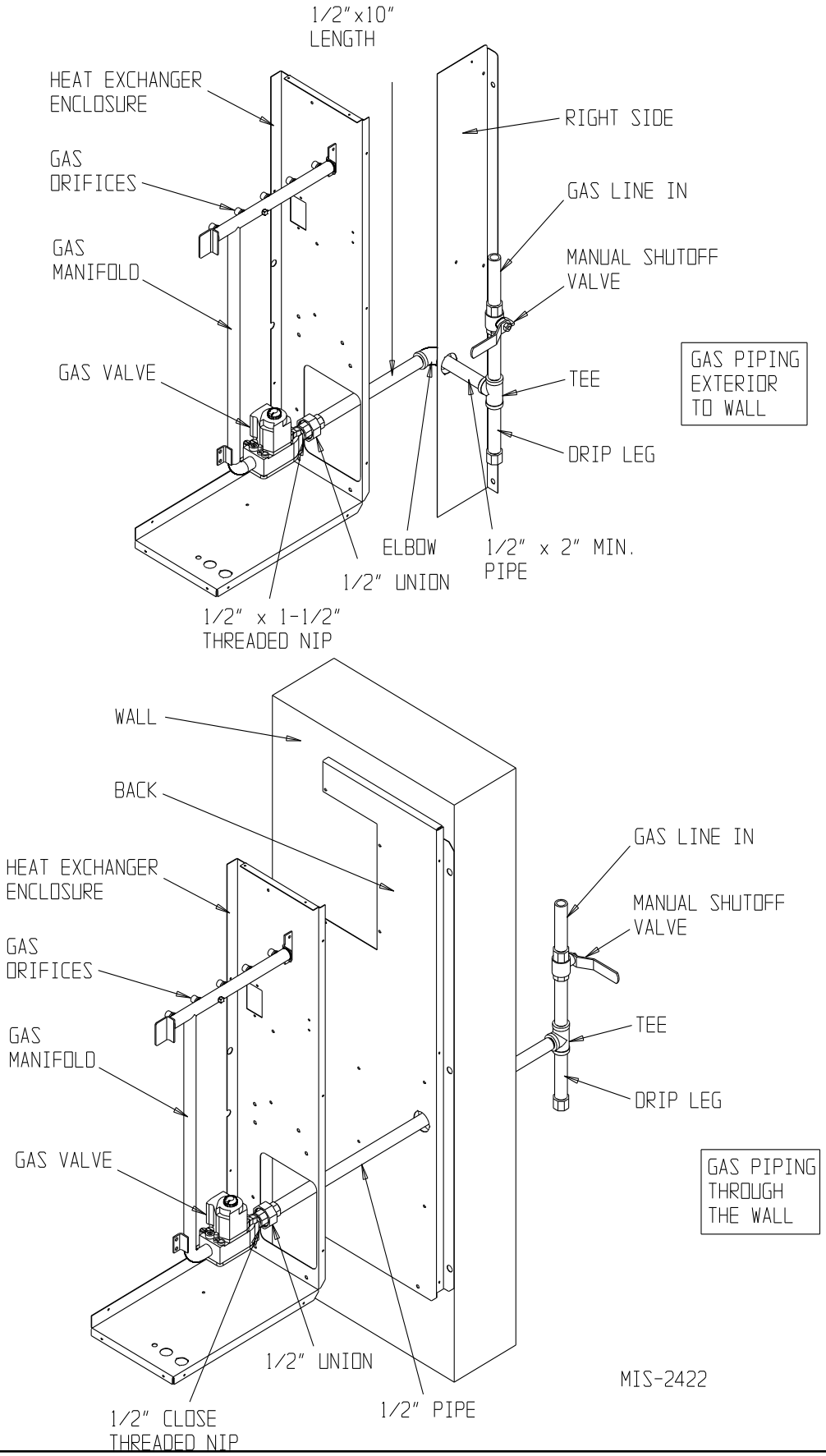

18. GAS SUPPLY AND PIPING

General Recommendations

1. Be sure the gas line complies with the local codes and ordinances, or, in their absence, with the National Fuel Gas Code, ANSI Z223.1, or Natural Gas Installation Code, CAN/CGA B149.1, or Propane Installation Code B149.2, latest edition.
2. A sediment trap or drip leg must be installed in the supply line to the furnace.
3. A ground joint union shall be installed in the gas line adjacent to and upstream from the gas valve and downstream from the manual shut off valve.
4. An 1/8" NPT plugged tapping accessible for test gauge connection shall be installed immediately upstream of the gas supply connection to the furnace for the purpose of determining the supply gas pressure. This can be omitted if local codes permit use of plugged tapping in gas valve inlet.
5. Install listed manual shut off valve in the supply gas line external to and immediately upstream of the furnace (see Figure 11).
6. Use steel or wrought iron pipe and fittings.
7. *DO NOT* thread pipe too far. Valve distortion or malfunction may result from excess pipe within the control. Use pipe joint compound resistant to the action of liquefied petroleum gases on male threads only. *DO NOT* use Teflon tape. See Table 5 and Figure 12.

TABLE 5
Length of Standard Pipe Threads (Inches)

Pipe Size	Effective Length of Thread	Overall Length of Thread
3/8	1/2	9/16
3/4	1/2 - - 9/16	13/16
1	9/16	1

FIGURE 12
Proper Piping Practice

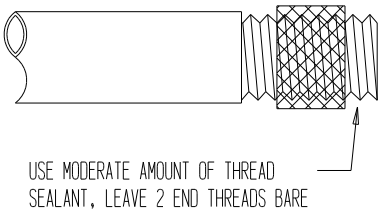

MIS-897

8. Refer to Table 6 for Gas Pipe Sizes for natural gas. If more than one appliance is supplied from a single line size, capacity must equal or exceed the combined input to all appliances, and the branch lines feeding the individual appliances properly sized for each input.

THIS PRODUCT MUST BE GAS PIPED BY A LICENSED PLUMBER OR GAS FITTER IN THE COMMONWEALTH OF MASSACHUSETTS.

TABLE 6
Gas Pipe Sizes – Natural Gas

Length of Pipe – Feet	Pipe Capacity – BTU per Hour Input Pipe Size			
	1/2"	3/4"	1"	1-1/4"
10	132,000	278,000	520,000	1,050,000
20	92,000	190,000	350,000	730,000
30	73,000	152,000	285,000	590,000
40	63,000	130,000	245,000	500,000
50	56,000	115,000	215,000	440,000
60	50,000	105,000	195,000	400,000
70	46,000	96,000	180,000	370,000
80	43,000	90,000	170,000	350,000
100	38,000	79,000	150,000	305,000

Checking the Gas Piping

Before turning gas under pressure into piping, all openings from which gas can escape should be closed. Immediately after turning on gas, the system should be checked for leaks. This can be done by watching the 1/2 cubic foot test dial and allowing 4 minutes to show any movement, and by soaping each pipe connection and watching for bubbles. If a leak is found, make the necessary repairs immediately and repeat the above test. The furnace must be isolated from the gas supply piping system by closing the manual shut off valve on the combination gas control valve during pressure testing of the gas supply piping system at pressures up to 1/2 PSIG. The furnace and its individual shut off valve must be disconnected from supply piping and supply piping capped during any pressure testing of supply piping system at test pressures in excess of 1/2 PSIG.

Defective pipes or fittings should be replaced and not repaired. Never use a flame or fire in any form to locate gas leaks; use a soap solution.

After the piping and meter have been checked completely, purge the system of air. *DO NOT* bleed air inside the furnace. ***Be sure to check and relight all the gas pilots on other appliances that may have been extinguished because of interrupted gas supply.***

PROPANE (LP) GAS CONVERSION

This unit may be converted in the field for use with Propane (LP) gas. Propane gas conversion kit number WGCK-1 is designed for conversions of units installed from 0 – 6,000' elevations. Propane gas conversion kit number WGCK-2 is designed for conversions of units installed from 6,001' – 10,000' elevations. These kits may be purchased from your local distributor.

⚠ WARNING

When converting from propane (LP) gas to natural gas, the gas orifice spuds and gas valve spring must be replaced and the gas valve regulator pressure must be adjusted correctly. Failure to do so can result in fire, injury or death. Refer to Table 8 for proper orifice sizing.

Natural gas spring kit, part number 5603-007, can be purchased through your local distributor.

19. MANIFOLD PRESSURE ADJUSTMENT

A 0 to 15" water manometer with 0.1" resolution and a 1/8" NPT manual shut off valve is needed to measure actual manifold pressure.

⚠ WARNING

Correct manifold pressure is necessary for proper ignition and burner operation. Failure to accurately adjust pressure could cause heat exchanger failure.

1. Turn off gas at equipment shut off valve in gas supply line just ahead of furnace.
2. Remove plug from outlet pressure tap in gas control or gas manifold.
3. Install 1/8" NPT manual shut off valve in hole vacated by plug. Make sure shut off valve is in off position.
4. Attach manometer to 1/8" NPT manual shut off valve just installed.
5. Slowly open equipment shut off valve in gas supply line just ahead of furnace. Start furnace following "Operating Instructions" on front door.
6. Slowly open 1/8" NPT manual shut off valve leading to manometer.
7. Read manifold pressure on manometer.
8. Adjust manifold pressure by turning gas control regulator adjusting screw clockwise to increase pressure or turning counterclockwise to decrease pressure. Manifold pressure must be within allowable range as follows:
   - Natural gas manifold pressure must be between 3.2" and 3.8" W.C. Rated pressure is 3.5".
   - Propane gas (LP) manifold pressure must be between 9.7" and 10.3" W.C. Rated pressure is 10".

NOTE: For natural gas, if gas flow rate can't be properly set within these pressure ranges then you must change main burner orifices to obtain proper gas flow rate.

9. Shut off furnace. Turn off gas at equipment shut off valve in gas supply line just ahead of furnace. Install outlet pressure tap plug in gas control. Turn on gas.
10. Check regulator adjustment cover screw and gas control plug for gas leaks. Use a commercial soap solution made for leak detection.

20. CHECKING GAS INPUT RATE

It is the installer's responsibility to see that the BTU input rate of the furnace is properly adjusted. Under-firing could cause inadequate heat, excessive condensation or ignition problems. Overfiring could cause sooting, flame impingement or overheating of heat exchanger.

⚠ WARNING

Failure to adjust furnace to the proper firing rate could cause heat exchanger failure.

Depending on local gas heating value and elevation, the manifold pressure may need to be adjusted or the orifices changed to get proper gas input rate. Check with the local gas supplier to determine heating value (BTU/cu. ft.) of natural gas in the area.

NOTE: If furnace is being installed at an altitude of more than 6,000' above sea level, the furnace must be derated. See Section 21 "Standard Orifice Sizing and High Altitude Derate".

Natural Gas Input Rate

Natural gas heating value (BTU/cu. ft.) can vary significantly. Before starting natural gas input check, obtain the gas heating value at the location from local supplier. A stopwatch is needed to measure actual gas input.

1. Gas supply pressure must be between 5" and 7" W.C. for natural gas.
2. Turn off all other gas appliances. Pilots may be left on.
3. Start furnace following “Operating Instructions” on front door.
4. Let furnace warm up for 6 minutes.
5. Locate gas meter. Determine which dial has the least cubic feet of gas and how many cubic feet per revolution it represents. This is usually one-half, one or two cubic feet per revolution.
6. With stopwatch, measure time it takes to consume two cubic feet of gas.
   - If dial is one-half cubic foot per revolution, measure time for four revolutions.
   - If dial is one cubic foot per revolution, measure time for two revolutions.
   - If dial is two cubic feet per revolution, measure time for one revolution.
7. Divide this time by two. This gives average time for one cubic foot of gas to flow through meter. Example: If it took 58 seconds for two cubic feet to flow, it would take 29 seconds for one cubic foot to flow.
8. Calculate gas input using this formula:

$$\text{Gas input} = \frac{\text{Gas Heating Value (BTU/cu. ft.)} \times 3{,}600 \text{ sec/hr}}{\text{Time (Seconds for one cubic foot of gas)}} = \text{BTU/hour}$$

   Example:

   Assume it took 29 seconds for one cubic foot of gas to flow and heating value of 1,000 BTU/cu. ft.

$$\text{Gas input} = \frac{1{,}000 \times 3{,}600}{29} = 124{,}138 \text{ BTU}$$

   If no other pilots were left on, this is the furnace gas input.

9. If water heater, dryer or range pilots were left on, allow for them in calculating correct furnace gas input. A quick way is to allow 1,000 BTU per hour for a water heater, 500 BTU per hour for dryer and 500 BTU per hour for each range burner pilot.

   Example:

   If gas water heater, dryer, two range burner pilots and one oven pilot were left on, allow:

Water heater pilot	1,000 BTU per hour
Dryer pilot	500 BTU per hour
2 range burner pilots	1,000 BTU per hour
1 range oven pilot	500 BTU per hour
	3,000 BTU per hour

   Subtracting 3,000 BTU per hour from 124,138 BTU per hour measured above equals 121,138 BTU per hour. This would be the correct furnace gas input after allowing for pilots left on.

10. Manifold pressure may be adjusted within the range of 3.2" W.C. to 3.8" W.C. to get rated input ± 2 percent. See Section 19, “Manifold Pressure Adjustment”. If rated input with manifold pressure cannot be gotten within the allowable range, orifices must be changed.

Propane (LP) Gas Input Rate

⚠WARNING

Propane (LP) gas installations do not have gas meters to double check input rate. Measure manifold pressure adjustment with an accurate manometer. Failure to accurately adjust pressure could cause heat exchanger failure, asphyxiation, fire or explosion, resulting in damage, injury or death.

1. Make sure the main burner orifices are correct.
2. Gas supply pressure must be between 11" and 13" W.C. for propane (LP) gas.
3. Start furnace following “Operating Instructions” on front door.
4. Let furnace warm up for 6 minutes.
5. Adjust manifold pressure to 10.0" W.C. ± 0.3" W.C. See Section 19, “Manifold Pressure Adjustment”.

⚠WARNING

Do not set propane (LP) manifold pressure at 11.0" W.C. It could cause heat exchanger failure.

21. STANDARD ORIFICE SIZING AND HIGH ALTITUDE DERATE

This furnace is shipped with fixed gas orifices for use with natural gas and sized for 1000 BTU/cubic foot gas. Make sure actual gas input does not exceed rating plate input. The orifices may need to changed to get the correct gas input. Whether they need changed or not depends on input and the gas heat value at standard conditions and elevation. Consult the local gas supplier for gas heat value and any special derating requirements. See Section 20 for more information.

At higher altitudes, the density of the air is reduced. Therefore, for proper combustion, the quantity of gas burned in the furnace must also be reduced. This is called derating. This unit must be derated when installed at altitudes greater than 6,000' above sea level. A high altitude pressure switch must also be installed for operation above 6,000'. High altitude pressure switch kit number 8620-189 is designed for this application.

It is the installer's responsibility to see that the furnace input rate is adjusted properly. Derating must be achieved by reducing the size of the main burner orifices. Derating the furnace by adjusting the manifold pressure lower than the range specified in the Section 19, "Manifold Pressure Adjustment" is considered to be an improper procedure.

Table 7
Natural Gas Derate Capacities for All Models

WG Rated Input	Sea Level	1000	2000	3000	4000	5000	6000
45,000	45,000	43,560	42,120	40,680	39,600	38,880	37,980
50,000	50,000	48,400	46,800	45,200	44,000	43,200	42,200
67,500	67,500	65,340	63,180	61,020	59,400	58,320	56,970
75,000	75,000	72,600	70,200	67,800	66,000	64,800	63,300
90,000	90,000	87,120	84,240	81,360	79,200	77,760	75,960
100,000	100,000	96,800	93,600	90,400	88,000	86,400	84,400
112,500	112,500	108,900	105,300	101,700	99,000	97,200	94,950
125,000	125,000	121,000	117,000	113,000	110,000	108,000	105,500

TABLE 8
Natural Gas Orifice Tables

Factory Standard Input	Gas Heat* Value BTU/Cu. Ft.	Up to 6,000' No Changes Except for BTU Content	6,001' to 8,000' Requires Pressure Switch Change and Orifice Change Based on BTU Content	8,001' to 10,000' Requires Pressure Switch Change and Orifice Change Based on BTU Content
25000 BTU Per Burner	700-749	2.90	2.80	2.70
	750-799	2.80	2.70	2.60
	800-849	2.70	2.60	2.50
	850-899	2.60	2.50	2.45
	900-949	2.50	2.45	**(2.40)**
	950-999	2.45	**(2.40)**	2.35
	1000-1049**	**(2.40)**	2.35	**[2.30]**
	1050-1100	**[2.30]**	2.25	2.20
	Pressure Switch	Standard (.55)	Order 8620-189 High Altitude Pressure Switch Kit (.42)	
(2.40) is the standard factory-installed orifice size			**[2.30] orifices are shipped with the unit for field-installed optional 10% derate**	

Optional 10% Field Converted Derate	Gas Heat* Value BTU/Cu. Ft.	Up to 6,000' No Changes Except for BTU Content	6,001' to 8,000' Requires Pressure Switch Change and Orifice Change Based on BTU Content	8,001' to 10,000' Requires Pressure Switch Change and Orifice Change Based on BTU Content
22500 BTU Per Burner	700-749	2.75	2.70	2.60
	750-799	2.70	2.60	2.50
	800-849	2.60	2.50	
	850-899	2.50	2.45	**(2.40)**
	900-949	**(2.40)**	2.35	**[2.30]**
	950-999	2.35	**[2.30]**	2.25
	1000-1049**	**[2.30]**	2.25	2.20
	1050-1100	2.25	2.25	2.20
	Pressure Switch	Standard (.55)	Order 8620-189 High Altitude Pressure Switch Kit (.42)	
[2.30] orifices are shipped with the unit for field-installed optional 10% input rate			**(2.40) is the factory-installed orifice size for full rated input**	

* At standard conditions: 30.00 inches Mercury, 60F, saturated, .60 specific gravity.
** All Natural Gas factory orifice sizing and standard input ratings based on nominal 1025 BTU/cu ft gas and sea level conditions

All other orifice sizes shown are available as individual items. See orifice tables below for part numbers and number required.

Bard Part No.	Orifice Size (mm)	Orifice Diameter
9010-092	2.10	0.0826
9010-088	2.15	0.0846
9010-087	2.20	0.0866
9010-086	2.25	0.0885
9010-082	2.30	0.0905
9010-085	2.35	0.0925
9010-079	2.40	0.0945
9010-084	2.45	0.0964
9010-093	2.50	0.0984
9010-094	2.60	0.1024
9010-095	2.70	0.1063
9010-096	2.75	0.1082
9010-097	2.80	0.1102
9010-098	2.90	0.1142

No. of Orifices Required Based on Unit Input Rating
45,000 (2)
50,000 (2)
68,000 (3)
75,000 (3)
90,000 (4)
100,000 (4)
113,000 (5)
125,000 (5)

22. CONVERSION OF GAS INPUT BTUH FROM HIGH TO LOW RATING

All the derated WG series units are produced with maximum BTUH input orifices installed. To field convert input, a change to main burner orifices is required.

NOTE: No change to air orifices is necessary. A set of low input orifices is shipped with every unit. They are packaged in a bag stored behind the burner door. Refer to the unit rating plate to confirm the proper orifice size. Proper installation of the orifices is detailed as follows:

A. Shut off electrical supply to the unit.

B. Shut off gas supply to the unit.

C. Remove burner access panel.

D. Disconnect gas valve from gas supply piping.

E. Disconnect the two wires from the gas valve.

F. Remove manifold assembly to make orifices accessible and remove orifices.

G. Apply a modest amount of pipe compound to the new orifices and screw them into the manifold.

H. To assemble burner reverse steps A through G.

⚠ WARNING

Failure to follow these instructions could create a hazard resulting in property damage, bodily injury, or death.

23. MEASURING AIR TEMPERATURE RISE

Air temperature rise (supply air temperature minus return air temperature) must be within allowable air temperature rise range specified on furnace rating plate and in Table 1.

Two thermometers with 1° resolution capable of reading up to 200° F are needed. Check thermometers to make sure they agree, or compensate accordingly.

Follow this procedure:

1. Open supply air registers and return air grilles. Make sure the registers and grilles are free of obstruction from rugs, carpets, drapes or furniture.
2. Set balancing dampers in supply duct system.
3. Check duct work for obstructions or leaks.
4. Make sure filters are clean and in place.
5. Place one thermometer in supply air plenum approximately 2' from furnace. Locate thermometer tip in center of plenum to ensure proper temperature measurement.
6. Place second thermometer in return air duct approximately 2' from furnace. Locate thermometer tip in center of duct to ensure proper temperature measurement.
7. Set room thermostat on highest temperature setting. Operate furnace 10 minutes. Record supply air and return air temperatures.
8. Calculate air temperature rise by subtracting return air temperature from supply air temperature.
   - If air temperature rise is above the temperature rise range on rating plate, furnace is overfired or has insufficient airflow. Check gas input following the instructions found in section “Checking Gas Input Rate”. If air temperature rise is still above temperature rise range specified, more heating airflow is needed. Check duct work and grilles to make sure all are properly sized.
   - If air temperature rise is below the temperature rise range on rating plate, furnace is underfired or has too much airflow. Check gas input following the instructions found in section “Checking Gas Input Rate”. If air temperature rise is still below temperature rise range specified, less heating airflow is needed. Adjust dampers or grilles as needed.
   - After making adjustments, check air temperature rise to verify that resulting air temperature rise is within allowable range. If air temperature rise is still outside the temperature rise range specified on rating plate, check duct system design with a qualified heating engineer. It may be necessary to re-size the duct work. Recheck air temperature rise after revising duct systems.
9. Set room thermostat to desired setting.
10. Remove thermometers and seal duct work holes.

NOTE: Failure to seal holes could result in reduced system performance.

FIGURE 13
Access Internal Filter

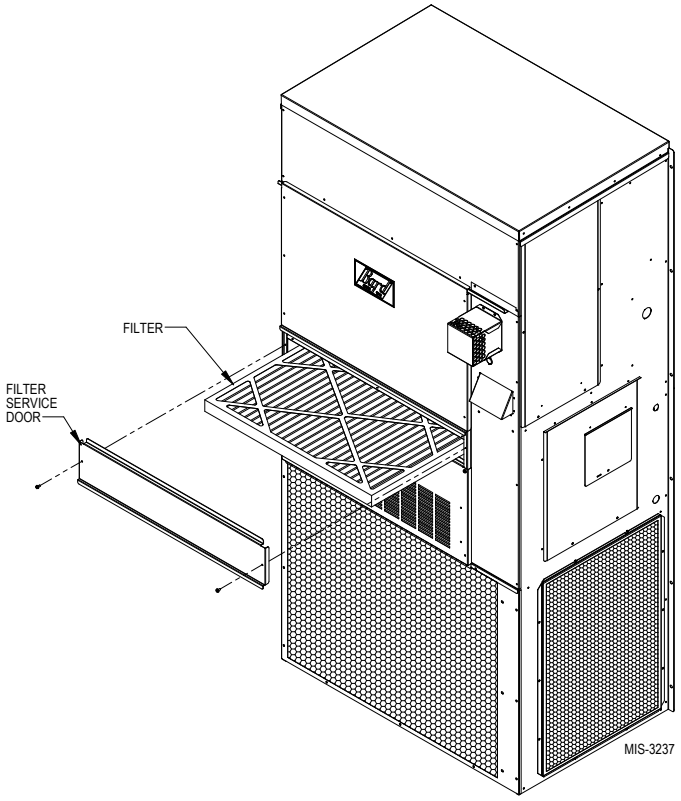

24. FILTERS

A 2" thick throwaway filter is supplied with each unit. This filter is installed by removing the filter access panel (see Figure 13).

Replacement filters are available through the local dealer.

25. COMPRESSOR CONTROL MODULE

The compressor control module is standard on the models covered by this manual. The compressor control is an anti-short cycle/lockout timer with high and low pressure switch monitoring and alarm relay output.

Adjustable Delay-on-Make and Delay-on-Break Timer

On initial power up or anytime power is interrupted to the unit, the *delay-on-make* period begins, which will be 2 minutes plus 10% of the *delay-on-break* setting. When the delay-on-make is complete and the high pressure and low pressure switches are closed, the compressor contactor is energized. Upon shutdown, the delay-on-break timer starts and prevents restart until the delay-on-break and delay-on-make periods have expired.

During routine operation of the unit with no power interruptions, the compressor will operate on demand with no delay.

High Pressure Switch and Lockout Sequence (Standard Feature)

If the high pressure switch opens, the compressor contactor will de-energize immediately. The lockout timer will go into a *soft lockout* and stay in soft lockout until the high pressure switch closes **and** the delay-on-make time has expired. If the high pressure switch opens again in this same operating cycle, the unit will go into *manual lockout* condition and the alarm circuit will energize. Recycling the wall thermostat resets the manual lockout.

Low Pressure Switch, Bypass and Lockout Sequence

If the low pressure switch opens for more that 120 seconds, the compressor contactor will de-energize and go into a soft lockout. Regardless of the state of the low pressure switch, the contactor will re-energize after the delay-on-make time delay has expired. If the low pressure switch remains open or opens again for longer than 120 seconds, the unit will go into manual lockout condition and the alarm circuit will energize. Recycling the wall thermostat resets the manual lockout.

Alarm Output

Alarm terminal is output connection for applications where alarm signal is desired. This terminal is powered whenever compressor is locked out due to HPC or LPC sequences as described.

NOTE: Both high and low pressure switch controls are inherently automatic reset devices. The high pressure switch and low pressure switch cut out and cut in settings are fixed by specific air conditioner or heat pump unit model. The lockout features, both soft and manual, are a function of the compressor control module.

Adjustments

Adjustable Delay-on-Make and Delay-on-Break Timer

The potentiometer is used to select delay-on-break time from 30 seconds to 5 minutes. Delay-on-make (DOM) timing on power-up and after power interruptions is equal to 2 minutes plus 10% of delay-on-break (DOB) setting:

0.5 minute (30 seconds)	DOB	=	123 second DOM
1.0 minute (60 seconds)	DOB	=	126 second DOM
2.0 minute (120 seconds)	DOB	=	132 second DOM
3.0 minute (160 seconds)	DOB	=	138 second DOM
4.0 minute (240 seconds)	DOB	=	144 second DOM
5.0 minute (300 seconds)	DOB	=	150 second DOM

26. PHASE MONITOR

All units with three phase scroll compressors are equipped with a three phase line monitor to prevent compressor damage due to phase reversal.

The phase monitor in this unit is equipped with two LEDs. If the “Y” signal is present at the phase monitor and phases are correct, the green LED will light.

If phases are reversed, the red fault LED will be lit and compressor operation is inhibited.

If a fault condition occurs, reverse two of the supply leads to the unit. Do not reverse any of the unit factory wires as damage may occur.

Optional Low Ambient Control

An optional low ambient control is available for both factory- and field-installed options. The low ambient control is to be applied to the WG3S/WG4S/WG5S models when operation below 50° F outdoor conditions are anticipated. Without this device, the evaporating pressure would fall off, and the indoor coil would ice over.

The fan cycling control cycles the fan motor on, once the liquid refrigerant pressure reaches 350 psig, and off, once it has dropped to 225 psig. It will continue to cycle between these parameters depending on outdoor temperatures and the load/stage of the system.

This cycling maintains a minimum liquid pressure affecting the minimum suction pressure. This effect insures an evaporating temperature that is slightly above the point of ice formation on the evaporator.

27. LIGHTING AND SHUTDOWN INSTRUCTIONS

FIGURE 14
Lighting and Shutdown Instruction Label

FOR YOUR SAFETY READ BEFORE OPERATING

WARNING: If you do not follow these instructions exactly, a fire or explosion may result causing property damage, personal injury or loss of life.

A. This appliance does not have a pilot. It is equipped with an ignition device which automatically lights the burner. Do NOT try to light the burner by hand.

B. BEFORE OPERATING smell all around the appliance area for gas. Be sure to smell next to the floor because some gas is heavier than air and will settle on the floor.

WHAT TO DO IF YOU SMELL GAS

* Do not try to light any appliance.
* Do not touch any electric switch; do not use any phone in your building.
* Immediately call your supplier from a neighbor's phone. Follow the gas supplier's instructions.
* If you cannot reach your gas supplier; call the fire department.

C. Use only your hand to push in or move the gas control lever. Never use tools. If the lever will not push in or turn by hand, don't try to repair it, call a qualified service technician. Force or attempted repair may result in a fire or explosion.

D. Do not use this appliance if any part has been under water. Immediately call a qualified service technician to inspect the appliance and to replace any part of the control system and any gas control which has been under water.

OPERATING INSTRUCTIONS

1. STOP! Read the safety information above on this label.
2. Set the thermostat to lowest setting
3. Turn off all electric power to the appliance.
4. This appliance is equipped with an ignition device which automatically lights the burner. Do NOT try to light the burner by hand.

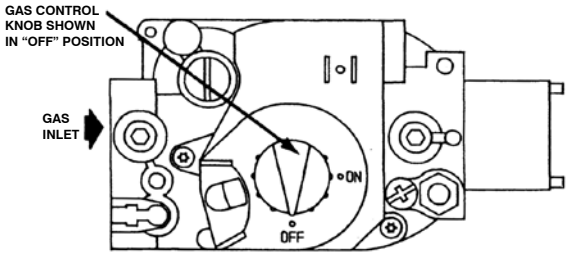

5. Remove control access panel.
6. Push in gas control knob slightly and turn clockwise to "OFF".

   NOTE: Knob cannot be turned to "OFF" unless knob is pushed in slightly. Do not force.
7. Wait five (5) minutes to clear out any gas. Then smell for gas, including near the floor. If you smell gas, STOP! Follow "B" in the safety information above on this label. If you don't smell gas, go to the next step.
8. Turn gas control knob counterclockwise to "ON".
9. Replace control access panel.
10. Turn on all electric power to the appliance.
11. Set thermostat to desired setting.
12. If the appliance will not operate, follow the instructions "To Turn Off Gas To Appliance" and call your service technician or gas supplier.

TO TURN OFF GAS TO APPLIANCE

1. Set the thermostat to lowest setting.
2. Turn off all electric power to the appliance if service is to be performed.
3. Remove control access panel.
4. Push in gas control lever slightly and move to "OFF". Do not force.
5. Replace control access panel.

7961-509

28. SERVICE AGENCY PROCEDURES

⚠ CAUTION

Label all wires prior to disconnection when servicing controls. Wiring errors can cause improper and dangerous operation. Verify proper operation after servicing.

⚠ WARNING

Follow these procedures before inspecting furnace.

- Turn room thermostat to its lowest or off setting.
- Turn off manual gas shut off valve.
- Wait at least 5 minutes for furnace to cool if it was recently operating.
- Turn off furnace electrical power; failure to do so could result in injury or death.

Main Burner

Observe the main burners in operation. The flame should be mostly "blue" with possibly a little orange (not yellow) at the tips of the flame. The flames should be in the center of the heat exchanger tubes and not impinging on the heat exchanger surfaces themselves.

Observe the fire until the blower starts (there is a normal delay period until the heat exchanger warms up). There should be no change in the size or shape of the flame. If there is any wavering or blowing of the flame on blower start-up, it is an indication of a possible leak in the heat exchanger.

FIGURE 15
Top View of Gas Control

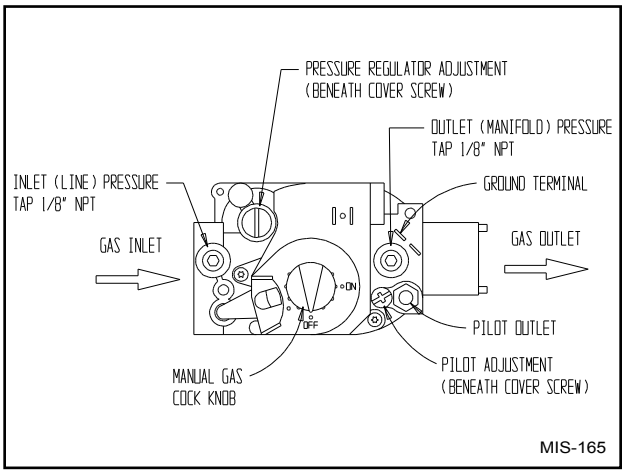

Burners/Heat Exchanger/Flue Gas Passage Ways

The burners, heat exchanger and interior flue gas passages may be inspected using a light on small mirror or an extension handle. Remove the screws securing the inducer and collector box. Now inspect the upper tubes of the heat exchanger.

Check the exterior of the heat exchanger and the interior flue gas passages for any evidence of deterioration due to corrosion, cracking or other causes. If signs of sooting exist, remove the burners and clean the heat exchanger, as required.

29. MAINTAINING UNIT IN GOOD WORKING ORDER

The unit should be inspected annually by a qualified service agency.

⚠ WARNING

Use replacement parts listed in the Replacement Parts list only. The use of incorrect parts could cause improper unit operation, resulting in damage, injury or death.

⚠WARNING

Disconnect electrical power before servicing unit. Failure to do so could result in electrical shock or death.

Annual Maintenance

Routine inspection and maintenance procedures are the responsibility of the user and are outlined below.

1. Before inspecting unit:
   a. Turn room thermostat to lowest or OFF setting.
   b. Turn off equipment gas shut off valve.
   c. Wait for unit to cool if it was recently operating.
   d. Turn off electrical power to unit.
2. Inspect the following:
   a. Vent terminal and combustion air intake terminal. Make sure both are free from obstructions.
   b. Vertical Vent Applications – Inspect venting system. Make sure system has no holes, is physically sound and free from obstructions.
   c. Make sure the supply and return air flange sleeves or duct work are securely fastened to unit and physically sound.
   d. Supply and return grilles must be open and free from obstructions.
   e. Inspect to make sure the unit is securely fastened to the wall. Seal any possible leaks between unit and wall with appropriate exterior sealing material.
   f. Inspect burners, heat exchanger, induced draft blower and induced draft blower collector box. There must be no obvious signs of deterioration.
   g. Inspect all electrical connections and wiring.
   h. Check all gas piping for leaks with soap solution used to detect leaks.
   i. Inspect, clean and repair as needed the entire blower assembly, air filters, draft inducer, cooling coils and vent options (if installed).

Routine Maintenance

1. Air Filters – Check the condition at least monthly when the unit is in use, and replace as necessary.
2. Lubrication Requirements – The indoor circulating air blower motor and outdoor circulating air fan motor are permanently lubricated and require no re-oiling. The combustion air blower motor requires no re-oiling.

⚠WARNING

Turn off electrical power supply to prevent injury from moving parts or electric shock.

Routine Inspection

1. Inspect the physical support of the unit annually to make sure it is securely fastened to the building. Also look for any obvious signs of deterioration.
2. Inspect the main burners at the beginning of each heating season and clean as necessary.
3. Inspect the vent terminal and combustion air intake hood for any obvious deterioration and to make sure it is free and clear of any obstructions.

30. REPLACEMENT PARTS

⚠WARNING

Use replacement parts listed in Replacement Parts list. Failure to do so could cause improper furnace operation, resulting in property damage, personal injury, or death.

Replacement parts for the gas/electric units are available through local distributors.

A replacement parts list manual is supplied with each unit. When ordering parts or making inquiries pertaining to any of the units covered by these instructions, it is very important to always supply the ***complete*** model number and serial number of the unit. This is necessary to assure that the correct parts (or an approved alternate part) are issued to the service agency.

31. SEQUENCE OF OPERATION – HEATING

On a call for heat from the thermostat, the induced draft blower is energized. Once sufficient draft is established, the pressure switch contacts close and the ignition system is energized. The direct spark ignitor will be energized allowing gas to flow. At the same time the main valve is energized, a 30-second blower delay timer is activated.

After this delay, the heating speed blower relay energizes. The blower will begin operating and remain in operation until the set delay time after the call for heat has been satisfied. This timing sequence guarantees blower on, blower off operation.

This unit is equipped with a flame roll-out switch, which is wired in series with the control circuit. This is a manual reset switch and is used for the purpose of preventing possible fire hazard in the event of a system malfunction. If this switch has opened the control circuit, there could be a possible system malfunction. Some of the conditions that might cause a roll-out to occur are blockage or sooting of primary heat exchanger, overfiring of furnace due to improper main burner orifices or incorrect manifold pressure, insufficient combustion air or installation deficiencies with respect to return air duct design or sizing.

Once the problem has been resolved, reset the switch by pressing down on the reset button on top of the switch. See Figure 16 for additional information.

32. SEQUENCE OF OPERATION – COOLING

Non-Economizer

Stage 1 (Y1) cooling call activates Step 1 (partial capacity, 66%) of compressor capacity.

Stage 2 (Y2) cooling call activates Step 2 (full capacity, 100%) of compressor capacity.

With Economizer

Stage 1 (Y1) cooling call goes to economizer controls for decision:

- If enthalpy control decides outdoor conditions are suitable for free cooling, the economizer will operate.
  - If Stage 2 cooling call is issued during economizer operation, the economizer will close and the compressor will go straight to Step 2 full capacity operation.
- If enthalpy control decides outdoor conditions are not suitable for free cooling, the economizer will not operate (or close) and Step 1 of the compressor will operate.
  - If Stage 2 cooling call is issued, the compressor will shift to Step 2 full cooling capacity operation.

FIGURE 16
Sequence of Operation
Electronic Blower Control

Action	System Response
Thermostat calls for heat (W terminal is energized).	• Combustion air blower is energized. • Air proving switch makes. Airflow is established. • Ignition system is energized. • Gas valve opens and main burner lights. • Heat fan on delay timing begins. When timing is complete, the circulating fan is energized at heat speed.
Thermostat ends call for heat.	• Ignition system is de-energized and gas valve closes. • Combustion air blower is de-energized after postpurge timing. • Heat fan off delay timing begins. When timing is complete, the circulating fan is de-energized.
Thermostat begins call for cool (G and Y terminals re-energized).	• Cooling contactor is energized. • Circulating fan is energized on cool speed after cool fan on delay timing.
Thermostat begins call for fan (G terminal is de-energized).	• Circulating fan is de-energized
Limit (flame rollout) opens.	• Thermostat and ignition system are de-energized and gas valve closes. • Combustion air blower and circulating fan heat speed are energized.
Limit (auto reset) or flame rollout (manual reset) circuit closed.	• Combustion air blower remains energized for postpurge timing. • The circulation fan remains energized for the selected delay off timing. • Normal operation resumes.

FIGURE 17
Furnace Control Board and Blower Control

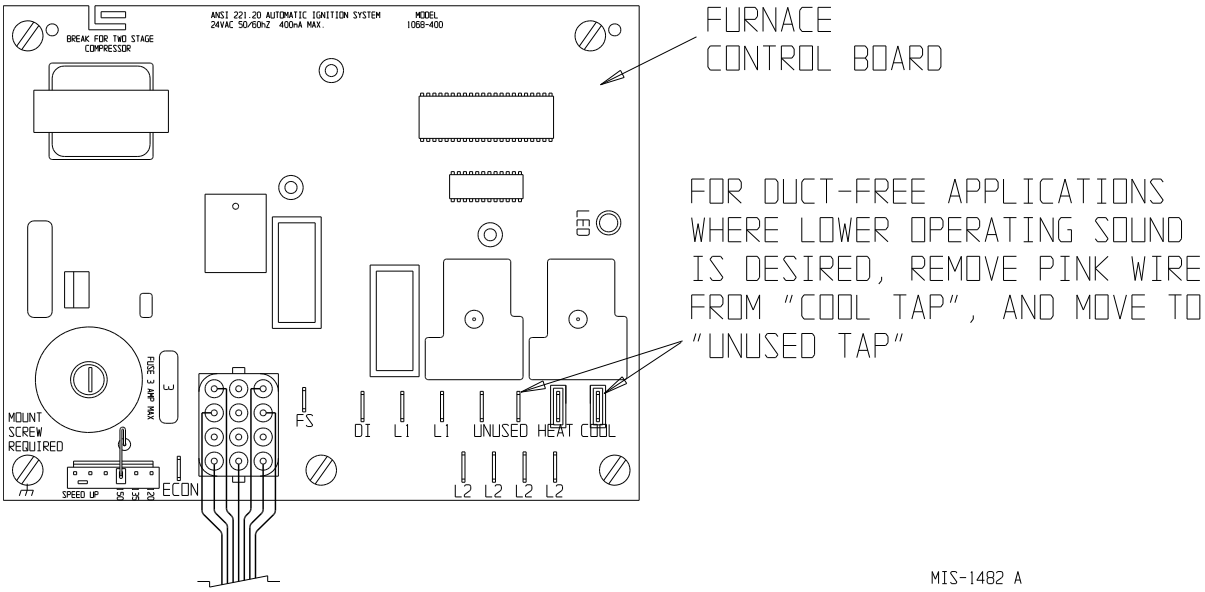

33. INDOOR BLOWER OPERATION

The indoor blower motor is a constant CFM variable speed direct drive motor. The motor is programmed to respond to individual thermostatic inputs that will determine the speed/airflow at which the motor operates. The motor software maintains the rated airflow across the range of allowable static whether the system is ducted or free blow. It will also maintain the temperature rise across the gas heat exchanger at the mid-point of the allowable rise range automatically. There are not adjustments that can be made in the field to adjust the airflows for any mode of operation.

For duct-free applications where lower operating sound is desired, remove pink wire from “COOL” tap and move to “Unused” tap.

TABLE 9
Indoor Blower Performance ①

Model	Rated ESP	Max ESP	Continuous CFM ②	Rated 1st Stage Cooling CFM ③	Rated 2nd Stage Cooling CFM ④	Reduced 2nd Stage Cooling CFM ⑤	Heating CFM ⑥ ⑦			
							50,000 BTU Input	75,000 BTU Input	100,000 BTU Input	125,000 BTU Input
WG3S2	0.15	0.50	800	800	1100	1000	1020	1250	1365	1410
WG4S2	0.20	0.50	825	1100	1500	1350	1020	1250	1365	1410
WG5S2	0.20	0.50	850	1300	1700	1500	1020	1250	1365	1410

① Motor will deliver consistent CFM through voltage supply range with no deterioration (197-253V for 230/208V models, 414-506V for 460V models).

② Continuous CFM is the total air being circulated during continuous (manual) fan mode.

③ Will occur automatically with a call for “Y1” signal from thermostat.

④ Will occur automatically with a call for “Y2” signal from thermostat.

⑤ Reduced cooling airflow when pink wire is removed from “COOL” tap on furnace control board and placed on “UNUSED” tap.

⑥ Will occur automatically with a call for “W” signal from thermostat.

⑦ Constant CFM of variable speed motor should maintain mid-rise temperature differential through range of allowable static.

TABLE 10
Integrated Furnace and Blower Control Operation

IGNITION SEQUENCE CONTROL

Ignition Source	24 VAC DSI
Flame Sensing	Remote
Timings	
- Prepurge	15 seconds
- Postpurge	30 seconds (0 if cycle terminated before valve "on")
- Inter-trial purge	15 seconds
- Pressure switch proving period	60 seconds
- Trials for ignition	3 per ignition sequence
- Trial for ignition	7 seconds total time to prove flame
- Ignition sequence lockout	60 minutes (after 3 trials for ignition), auto reset – can be reset during the 60-minute lockout period by opening thermostat circuit for 3 seconds or more
- Heat blower on – delay	30 seconds (timing starts when ignitor cycles off)
- Heat blower off – delay	90, 120, 150 seconds selectable; factory set at 120
- Cool blower on – delay	7 seconds
- Cool blower off – delay	60 seconds
- Manual fan operations	Operates on selected heating speed and cycles off during ignition or burner start-up sequence.
- High limit control operation	Automatic reset, ignition sequence restart. See Note 1.
- Flame rollout switch operation	Manual reset, igniton sequence initiated after switch is manually reset. See Note 1.

NOTE 1: After the fourth limit trip on a given call for heat there will be a 1-hour delay before the ignition sequence will restart. After either high limit switch or flame rollout switch actuation the inducer will operate for the 30-second post purge and the comfort air blower will operate for the selected off delay. If on Manual Fan operation, the comfort air blower will continue to operate.

SAFETY UNITS

High limit/Rollout	SPST in 24 Volt
Pressure switch	SPST, safe start check

COMFORT FAN CONTROL

Heating Speed Fan	
Normal operation	
– ON delay	30 seconds fixed. Timing starts when igniter de-energized.
– OFF delay	3 selectable timings – 120 seconds standard can be changed to 90 or 150 seconds.
Limit Operation	ON when limit OPEN OFF after OFF delay when limit CLOSES
Flame Sense	ON if flame is sensed *and* there is no call for heat.
Cooling Speed Fan	
– ON delay	7 seconds
– OFF delay	60 seconds
Manual Fan	ON continuously on HEATING speed. When call for cool, the fan switches to COOLING speed. Then when thermostat satisfied, the fan switches back to HEATING speed after COOLING OFF delay.

DIAGNOSTIC INDICATOR

A red LED is provided to indicate system faults as follows:

Steady ON – Control okay in standby, call for heat, cool or fan modes
Steady OFF – Internal control fault or no power. Also check 3A fuse on control.
1 flash – Lockout due to failed ignition or flame dropouts
2 flashes – Pressure switch open with inducer on
3 flashes – Pressure switch is closed with inducer off
4 flashes – Limit switch is open
5 flashes – Flame detected with gas valve closed
6 flashes – Compressor output delayed from short cycle/staging timer
The flash rate is 0.25 seconds on, 0.25 seconds off with 2.0 seconds pause between flash codes.

START UP

These units require R-410A refrigerant and Polyol Ester oil.

Application

1. Use separate service and manufacturing equipment to avoid cross contamination of oil and refrigerants.
2. Use recovery equipment rated for R-410A refrigerant.
3. Use manifold gauges rated for R-410A (800 psi/250 psi low).
4. R-410A is a binary blend of HFC-32 and HFC-125.
5. R-410A is nearly azeotropic—similar to R-22 and R-12. Although nearly azeotropic, charge with liquid refrigerant.
6. R-410A operates at 40-70% higher pressure than R-22, and systems designed for R-22 cannot withstand this higher pressure.
7. R-410A has an ozone depletion potential of zero, but must be reclaimed due to its global warming potential.
8. R-410A compressors use Polyol Ester oil.
9. Polyol Ester oil is hygroscopic; it will rapidly absorb moisture and strongly hold this moisture in the oil.
10. A liquid line dryer must be used—even a deep vacuum will not separate moisture from the oil.
11. Limit atmospheric exposure to 15 minutes **MAXIMUM**.
12. If compressor removal is necessary, always plug compressor immediately after removal. Purge with small amount of nitrogen when inserting plugs.

Important Installer Note

For improved start-up performance, wash the indoor coil with a dishwasher detergent.

High and Low Pressure Switch

All models covered by this manual are supplied with a remote reset high pressure switch and low pressure switch. If tripped, this pressure switch may be reset by turning the thermostat off then back on again.

Three Phase Scroll Compressor Start Up Information

Scroll compressors, like several other types of compressors, will only compress in one rotational direction. Direction of rotation is not an issue with single phase compressors since they will always start and run in the proper direction.

However, three phase compressors will rotate in either direction depending upon phasing of the power. Since there is a 50% chance of connecting power in such a way as to cause rotation in the reverse direction, verification of proper rotation must be made. All three phase units incorporate a phase monitor to ensure proper field wiring. See the "Phase Monitor" section on page 33.

Verification of ***proper rotation*** must be made any time a compressor is changed or rewired. If improper rotation is corrected at this time there will be no negative impact on the durability of the compressor. However, reverse operation for over 1 hour may have a negative impact on the bearing due to oil pump out.

NOTE: If compressor is allowed to run in reverse rotation for several minutes, the compressor's internal protector will trip.

All three phase ZPS compressors are wired identically internally. As a result, once the correct phasing is determined for a specific system or installation, connecting properly phased power leads to the same Fusite terminal should maintain proper rotation direction.

Verification of proper rotation direction is made by observing that suction pressure drops and discharge pressure rises when the compressor is energized. Reverse rotation also results in an elevated sound level over that with correct rotations, as well as, substantially reduced current draw compared to tabulated values.

The direction of rotation of the compressor may be changed by reversing any two line connections to the unit.

COMPRESSOR SOLENOID

(See Sequence of Operation on page 37 for function.) A nominal 24-volt direct current coil activates the internal compressor solenoid. The input control circuit voltage must be 18 to 28 volts AC. The coil power requirement is 20 VA. The external electrical connection is made with a molded plug assembly. This plug contains a full wave rectifier to supply direct current to the unloader coil.

Compressor Solenoid Test Procedure

If it is suspected that the unloader is not working, the following methods may be used to verify operation.

1. Operate the system and measure compressor amperage. Cycle the compressor solenoid on and off at 10-second intervals. The compressor amperage should go up or down at least 25%.
2. If Step 1 does not give the expected results, shut unit off. Apply 18 to 28 volts AC to the solenoid molded plug leads and listen for a click as the solenoid pulls in. Remove power and listen for another click as the solenoid returns to its original position.
3. If clicks can't be heard, shut off power and remove the control circuit molded plug from the compressor and measure the solenoid coil resistance. The resistance should be 32 to 60 ohms depending on compressor temperature.
4. Next, check the molded plug.

Voltage Check

Apply control voltage to the plug wires (18 to 28 volts AC). The measured **DC voltage** at the female connectors in the plug should be around 15 to 27 VDC.

Resistance Check

Measure the resistance from the end of one molded plug lead to either of the two female connectors in the plug. One of the connectors should read close to zero ohms, while the other should read infinity. Repeat with other wire. The same female connector as before should read zero, while the other connector again reads infinity. Reverse polarity on the ohmmeter leads and repeat. The female connector that read infinity previously should now read close to zero ohms.

Replace plug if either of these test methods does not show the desired results.

FAN BLADE SETTING DIMENSIONS

Shown below are the correct fan blade setting dimensions for proper air delivery across the outdoor coil.

Any service work requiring removal or adjustment in the fan and/or motor area will require that the dimensions below be checked and blade adjusted in or out on the motor shaft accordingly (see Table 11).

FIGURE 18
Fan Blade Setting

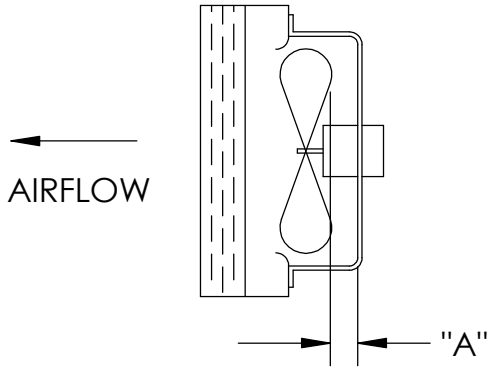

TABLE 11
Fan Blade Dimensions

Model	Dimension A
WG3S2 WG4S2 WG5S2	1.75"

REMOVAL OF FAN SHROUD

1. Disconnect all power to unit.
2. Remove the screws holding both grills—one on each side of unit—and remove grills.
3. Remove screws holding fan shroud to condenser and bottom – nine (9) screws.
4. Unwire condenser fan motor.
5. Slide complete motor, fan blade and shroud assembly out the left side of the unit.
6. Service motor/fan as needed.
7. Reverse steps to reinstall.

Troubleshooting ECM™ Motors

CAUTION:

Disconnect power from unit before removing or replacing connectors, or servicing motor. To avoid electric shock from the motor's capacitors, disconnect power and wait at least 5 minutes before opening motor.

Symptom	Cause/Procedure
Motor rocks slightly when starting	• This is normal start-up for ECM
Motor won't start • No movement	• Check blower turns by hand • Check power at motor • Check low voltage (24 Vac R to C) at motor • Check low voltage connections (G, Y, W, R, C) at motor • Check for unseated pins in connectors on motor harness • Test with a temporary jumper between R - G • Check motor for tight shaft • Perform motor/control replacement check • **Perform moisture check**
• Motor rocks, but won't start	• Check for loose or compliant motor mount • Make sure blower wheel is tight on shaft • Perform motor/control replacement check
Motor oscillates up and down while being tested off of blower	• It is normal for motor to oscillate with no load on shaft
Motor starts, but runs erratically • Varies up and down or intermittent	• Check line voltage for variation or "sag" • Check low voltage connections (G, Y, W, R, C) at motor, unseated pins in motor harness connectors • Check "Bk" for erratic CFM command (in variable-speed applications) • Check out system controls, thermostat • **Perform moisture check**
• "Hunts" or "puffs" at high CFM (speed)	• Does removing panel or filter reduce "puffing"? - Reduce restriction - Reduce max airflow
• Stays at low CFM despite system call for cool or heat CFM	• Check low voltage (thermostat) wires and connections • Verify fan is not in delay mode; wait until delay complete • "R" missing/not connected at motor • Perform motor/control replacement check
• Stays at high CFM	• "R" missing/not connected at motor • Is fan in delay mode? Wait until delay time complete • Perform motor/control replacement check
• Blower won't shut off	• Current leakage from controls into G, Y or W? Check for Triac switched thermostat or solid-state relay
Excessive noise	• Determine if it's air noise, cabinet, duct or motor noise; interview customer, if necessary

Symptom	Cause/Procedure
• Air noise	• High static creating high blower speed? - Is airflow set properly? - Does removing filter cause blower to slow down? Check filter - Use low-pressure drop filter - Check/correct duct restrictions
• Noisy blower or cabinet	• Check for loose blower housing, panels, etc. • High static creating high blower speed? - Check for air whistling through seams in ducts, cabinets or panels - Check for cabinet/duct deformation
• "Hunts" or "puffs" at high CFM (speed)	• Does removing panel or filter reduce "puffing"? - Reduce restriction - Reduce max. airflow
Evidence of Moisture • Motor failure or malfunction has occurred and moisture is present	• Replace motor and **perform moisture check**
• Evidence of moisture present inside air mover	• **Perform moisture check**

Do	Don't
• Check out motor, controls, wiring and connections thoroughly before replacing motor	• Automatically assume the motor is bad.
• Orient connectors down so water can't get in - Install "drip loops"	• Locate connectors above 7 and 4 o'clock positions
• Use authorized motor and model #'s for replacement	• Replace one motor or control model # with another (unless an authorized replacement)
• Keep static pressure to a minimum: - Recommend high efficiency, low static filters - Recommend keeping filters clean. - Design ductwork for min. static, max. comfort - Look for and recommend ductwork improvement, where necessary	• Use high pressure drop filters some have **½"** H20 drop! • Use restricted returns
• Size the equipment wisely	• Oversize system, then compensate with low airflow
• Check orientation before inserting motor connectors	• Plug in power connector backwards • Force plugs

Moisture Check

- Connectors are oriented "down" (or as recommended by equipment manufacturer)
- Arrange harness with "drip loop" under motor
- Is condensate drain plugged?
- Check for low airflow (too much latent capacity)
- Check for undercharged condition
- Check and plug leaks in return ducts, cabinet

Comfort Check

- Check proper airflow settings
- Low static pressure for lowest noise
- Set low continuous-fan CFM
- Use humidistat and 2-speed cooling units
- Use zoning controls designed for ECM that regulate CFM
- Thermostat in bad location?

Replacing ECM Control Module

To replace the control module for the GE variable-speed indoor blower motor, take the following steps:

1. It is essential to have the correct replacement module. The controls are factory programmed for specific operating modes. Even though they look alike, different modules may have completely different functionality.

   Using the wrong control module voids all product warranties and may produce unexpected results.

2. Begin by removing AC power from the unit being serviced. **Do not work on the motor with AC power applied.** To avoid electric shock from the motor's capacitors, disconnect power and wait at least 5 minutes before opening motor.

3. It is not necessary to remove the motor from the blower assembly, nor the blower assembly from the unit. Unplug the two cable connectors to the motor control assembly. There are latches on each connector. **Do not pull on the wires.** The plugs remove easily when properly released.

4. Locate the screws that retain to the motor control bracket to the sheet metal of the unit and remove them. Remove two (2) nuts that retain the control to the bracket and then remove two (2) nuts that retain sheet metal motor control end plate. *Refer to Figure 19.*

5. Disconnect the three (3) wires interior of the motor control by using a thumb and forefinger to squeeze the latch tab and the opposite side of the connector plug, gently pulling the connector. **Do not pull on the wires; grip the plug only.** *Refer to Figure 19.*

6. The control module is now completely detached from the motor. Verify with a standard ohmmeter that the resistance from each motor lead (in the motor plug just removed) to the motor shell is >100K ohms. *Refer to Figure 20.* (Measure to unpainted motor end plate.) If any motor lead fails this test, do not proceed to install the control module. **The motor is defective and must be replaced.** Installing the new control module will cause it to fail also.

7. Verify that the replacement control is correct for the application. Refer to the manufacturer's authorized replacement list. **Using the wrong control will result in improper or no blower operation.** Orient the control module so that the 3-wire motor plug can be inserted into the socket in the control. Carefully insert the plug and press it into the socket until it latches. **A slight click will be heard when properly inserted.**

8. Reverse Steps #5, 4, 3 to reconnect the motor control to the motor wires, secure the motor control cover plate, mount the control to the bracket and mount the motor control bracket back into the unit. **Make sure the orientation selected for replacing the control assures the control's cable connectors will be located downward in the application so that water cannot run down the cables and into the control.** ***Do not overtighten the bolts.***

9. Plug the 16-pin control plug into the motor. The plug is keyed. Make sure the connector is properly seated and latched.

10. Plug the 5-pin power connector into the motor. Even though the plug is keyed, **observe the proper orientation. Do not force the connector.** It plugs in very easily when properly oriented. **Reversing this plug will cause immediate failure of the control module.**

11. Final installation check. Make sure the motor is installed as follows:

    a. Motor connectors should be oriented between the 4 o'clock and 8 o'clock positions when the control is positioned in its final location and orientation.

    b. Add a drip loop to the cables so that water cannot enter the motor by draining down the cables. *Refer to Figure 21.*

The installation is now complete. Reapply the AC power to the HVAC equipment and verify that the new motor control module is working properly. Follow the manufacturer's procedures for disposition of the old control module.

Figure 19
Control Disassembly

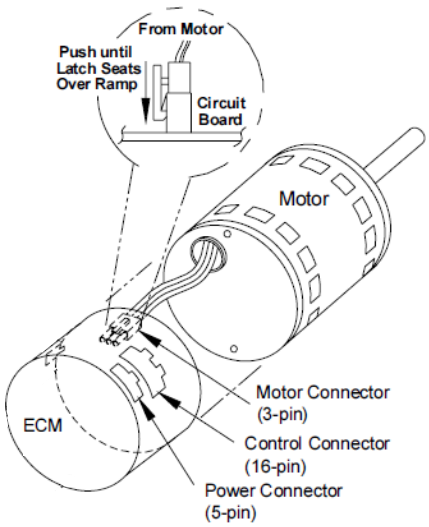

Figure 20
Winding Test

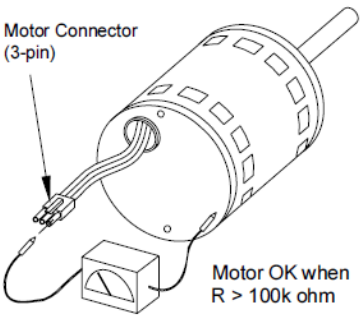

Figure 21
Drip Loop

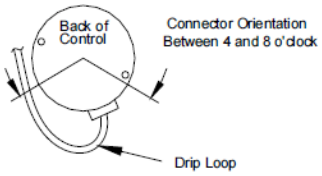

34. PRESSURE SERVICE PORTS

High and low pressure service ports are installed on all units so that the system operating pressures can be observed. Table 12 outlines expected pressures at various indoor and outdoor temperatures.

This unit employs high-flow Coremax valves instead of the typical Shrader type valves.

WARNING! Do NOT use a Schrader valve core removal tool with these valves. Use of such a tool could result in eye injuries or refrigerant burns!

To change a Coremax valve without first removing the refrigerant, a special tool is required which can be obtained at www.fastestinc.com/en/SCCA07H. See the replacement parts manual for replacement core part numbers.

TABLE 12
Cooling Pressures (All Temperatures °F)

High Capacity Cooling			Air Temperature Entering Outdoor Coil °F													
Model	**Return Air Temperature**	**Pressure**	**50**	**55**	**60**	**65**	**70**	**75**	**80**	**85**	**90**	**95**	**100**	**105**	**110**	**115**
WG3S2	75° DB 62° DB	Low Side High Side	112 195	115 214	119 233	122 253	126 272	129 291	131 314	132 337	134 360	135 383	136 409	138 435	139 461	140 487
	80° DB 67° DB	Low Side High Side	124 201	127 220	131 239	134 259	138 278	139 297	140 319	140 341	141 363	141 389	148 413	149 440	151 468	152 495
	85° DB 72° DB	Low Side High Side	135 205	138 224	142 243	145 263	149 282	152 301	154 326	156 350	157 375	159 399	161 425	162 451	164 476	165 502
WG4S2	75° DB 62° DB	Low Side High Side	117 197	119 216	121 235	123 255	125 274	127 293	128 316	130 339	131 361	132 383	133 410	135 438	136 466	137 494
	80° DB 67° DB	Low Side High Side	127 201	129 220	131 239	134 259	136 278	138 298	138 318	139 341	139 364	145 381	145 415	146 443	146 471	149 500
	85° DB 72° DB	Low Side High Side	141 203	143 223	145 243	148 263	150 283	152 303	152 326	153 349	153 372	154 396	156 422	158 449	160 478	162 508
WG5S2	75° DB 62° DB	Low Side High Side	118 199	119 217	120 236	122 260	123 285	125 309	126 333	128 357	129 381	130 405	132 432	133 460	135 487	136 514
	80° DB 67° DB	Low Side High Side	129 205	130 224	131 247	131 270	132 292	132 315	134 339	137 363	139 387	143 394	143 438	145 465	146 492	148 519
	85° DB 72° DB	Low Side High Side	137 216	139 237	140 258	141 279	142 300	143 321	146 346	148 370	151 395	153 419	155 447	157 474	158 502	160 529

Low Capacity Cooling			Air Temperature Entering Outdoor Coil °F													
Model	**Return Air Temperature**	**Pressure**	**50**	**55**	**60**	**65**	**70**	**75**	**80**	**85**	**90**	**95**	**100**	**105**	**110**	**115**
WG3S2	75° DB 62° DB	Low Side High Side	126 181	127 198	129 215	130 233	132 250	133 267	135 289	136 310	138 332	139 353	141 378	144 404	146 429	148 454
	80° DB 67° DB	Low Side High Side	134 184	134 201	135 218	135 236	136 253	136 270	137 291	137 312	138 333	138 358	140 380	142 406	144 432	146 458
	85° DB 72° DB	Low Side High Side	153 190	154 207	155 224	156 241	157 258	158 275	160 297	162 318	163 340	165 361	167 387	168 413	170 438	171 464
WG4S2	75° DB 62° DB	Low Side High Side	122 184	124 201	125 218	127 236	129 254	131 272	131 291	132 312	133 335	134 359	135 381	137 407	139 435	141 463
	80° DB 67° DB	Low Side High Side	132 185	134 203	136 221	138 239	140 257	142 275	145 298	146 317	147 339	149 354	149 384	150 410	151 438	152 467
	85° DB 72° DB	Low Side High Side	145 187	147 205	149 223	152 241	154 259	156 278	156 397	157 319	158 343	159 369	161 390	163 415	164 443	165 472
WG5S2	75° DB 62° DB	Low Side High Side	123 187	125 207	127 226	129 245	131 263	133 282	134 305	135 328	136 350	137 373	139 399	141 425	143 451	145 477
	80° DB 67° DB	Low Side High Side	134 192	136 211	138 230	139 248	141 267	143 286	144 308	145 331	146 353	148 367	153 402	155 429	156 456	158 483
	85° DB 72° DB	Low Side High Side	146 200	148 217	149 235	151 252	152 270	154 287	156 311	159 335	161 358	163 382	165 408	166 434	168 460	169 486

Low side pressure ± 4 PSIG
High side pressure ± 10 PSIG

35. R-410A REFRIGERANT CHARGE

This unit was charged at the factory with the quantity of refrigerant listed on the serial plate. AHRI capacity and efficiency ratings were determined by testing with this refrigerant charge quantity.

The pressure tables on page 44 show nominal pressures for the units. Since many installation specific situations can affect the pressure readings, this information should only be used by certified technicians as a guide for evaluating proper system performance. They shall not be used to adjust charge. If charge is in doubt, reclaim, evacuate and recharge the unit to the serial plate charge.

36. LOW-NOX BURNER ASSEMBLY "N" SUFFIX MODELS ONLY – U.S. INSTALLATIONS ONLY

Natural Gas Models Only

Model numbers designated with an "N" are designed for low NOx emissions which comply with all California Air Quality Management District regulations for nitrogen oxide emission levels. Refer to Figure 22 below for NOx insert information.

*** * IMPORTANT * ***

For propane (LP) conversions the NOx reduction screen inserts shown below must be removed. This is accomplished by removing the burner box assembly and removing the NOx screens. Reassemble unit properly before firing. Failure to remove the NOx screens can result in improper operation and malfunction of the burner system.

FIGURE 22
Low NOx Insert

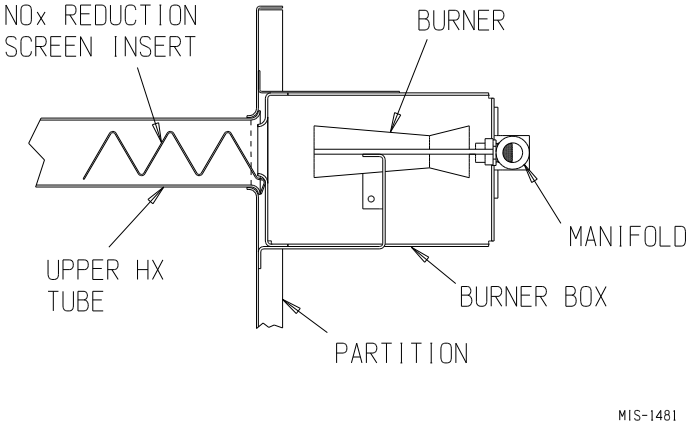

INDEX

Wiring Diagrams and Ladder Diagrams

Model No.	Heating Input	Input Power	Wiring Diagram	Ladder Diagram
WG3S2	50,000	208/230/60/1	4085-154A	4085-155
	75,000		4085-156A	4085-157
	100,000		4085-154A	4085-155
	125,000		4085-156A	4085-157
	50,000	208/230/60/3	4085-254A	4085-269
	75,000		4085-255A	4085-270
	100,000		4085-254A	4085-269
	125,000		4085-255A	4085-270
	50,000	460/60/3	4085-377A	4085-392
	75,000		4085-378A	4085-393
	100,000		4085-377A	4085-392
	125,000		4085-378A	4085-393
WG4S2	50,000	208/230/60/1	4085-154A	4085-155
	75,000		4085-156A	4085-157
	100,000		4085-154A	4085-155
	125,000		4085-156A	4085-157
	50,000	208/230/60/3	4085-254A	4085-269
	75,000		4085-255A	4085-270
	100,000		4085-254A	4085-269
	125,000		4085-255A	4085-270
	50,000	460/60/3	4085-377A	4085-392
	75,000		4085-378A	4085-393
	100,000		4085-377A	4085-392
	125,000		4085-378A	4085-393
WG5S2	50,000	208/230/60/1	4085-154A	4085-155
	75,000		4085-156A	4085-157
	100,000		4085-154A	4085-155
	125,000		4085-156A	4085-157
	50,000	208/230/60/3	4085-254A	4085-269
	75,000		4085-255A	4085-270
	100,000		4085-254A	4085-269
	125,000		4085-255A	4085-270
	50,000	460/60/3	4085-377A	4085-392
	75,000		4085-378A	4085-393
	100,000		4085-377A	4085-392
	125,000		4085-378A	4085-393

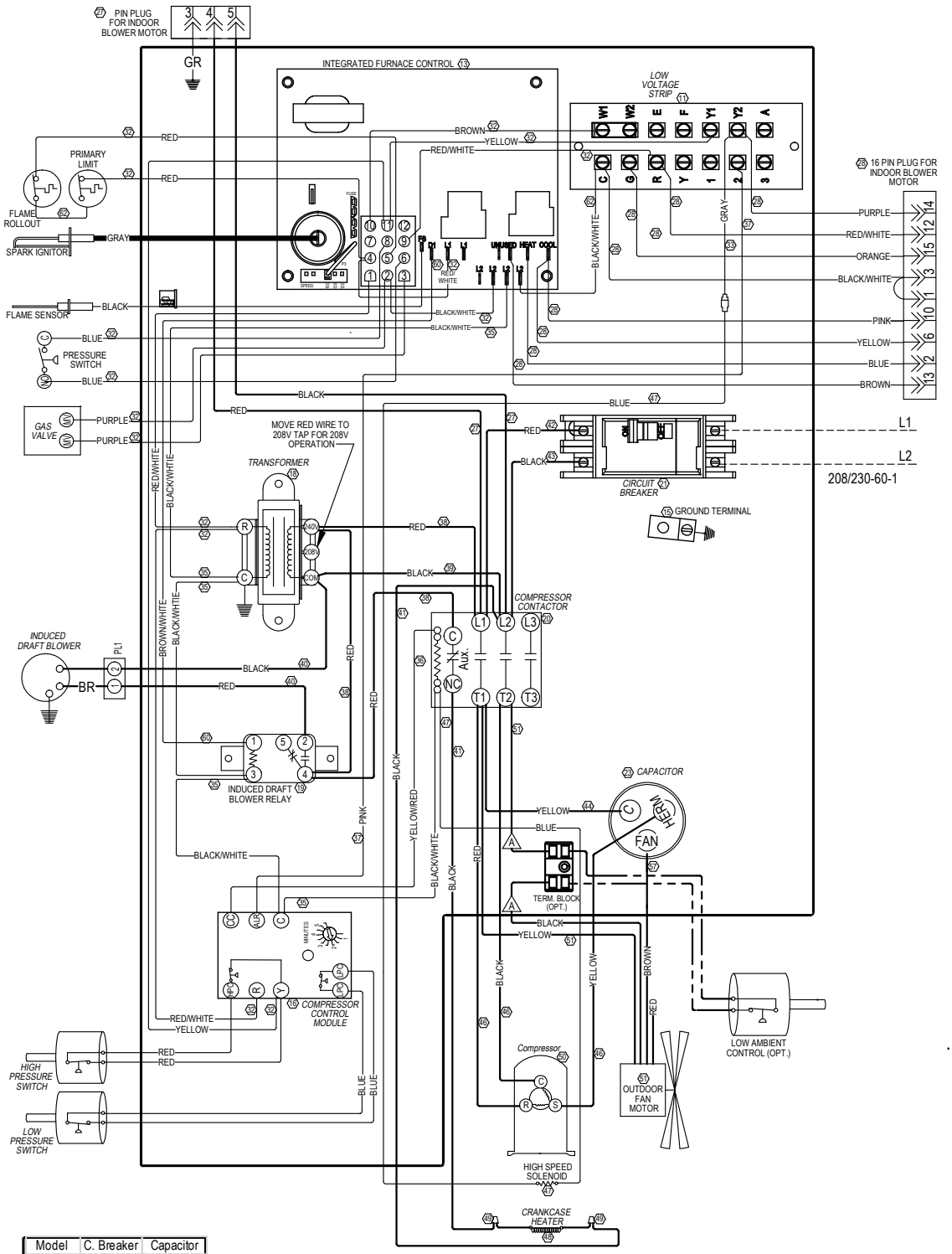

Model	C. Breaker	Capacitor
WG3S2-A	40A	40+10/370
WG4S2-A	45A	30+10/370
WG5S2-A	60A	40+10/440

USE COPPER CONDUCTORS SUITABLE FOR AT LEAST 75° C

IF ANY ORIGINAL WIRE AS SUPPLIED WITH THE APPLIANCE MUST BE REPLACED, IT MUST BE REPLACED WITH WIRING MATERIAL HAVING A TEMPERATURE RATING OF AT LEAST 105° C EXCEPT THE IGNITION CABLE WHICH IS 250°C HIGH VOLTAGE CABLE

Wire Identification numbers for Bard use only.

	Factory	Field	Optional
High Voltage			
Low Voltage			

A WIRES CONNECT IF OPTION NOT USED

4085-154 A

WG3S2-A, WG4S2-A, WG5S2-A 208/230/60/1

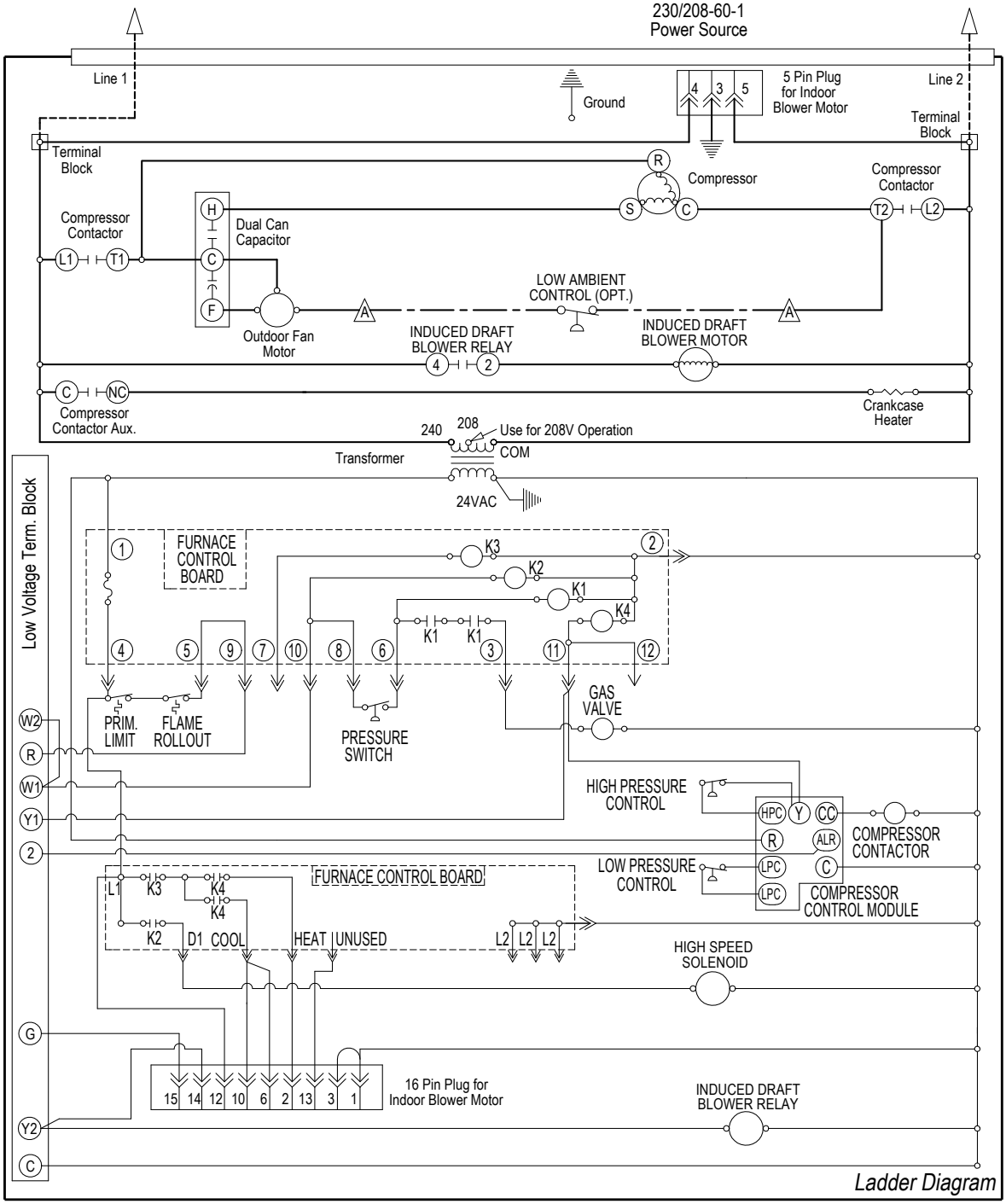

	Factory	Optional
High Voltage	———	— - —
Low Voltage	———	— - —

A
Wires Connect if Option Not Used

4085-155

WG3S2-A, WG4S2-A, WG5S2-A 208/230/60/1

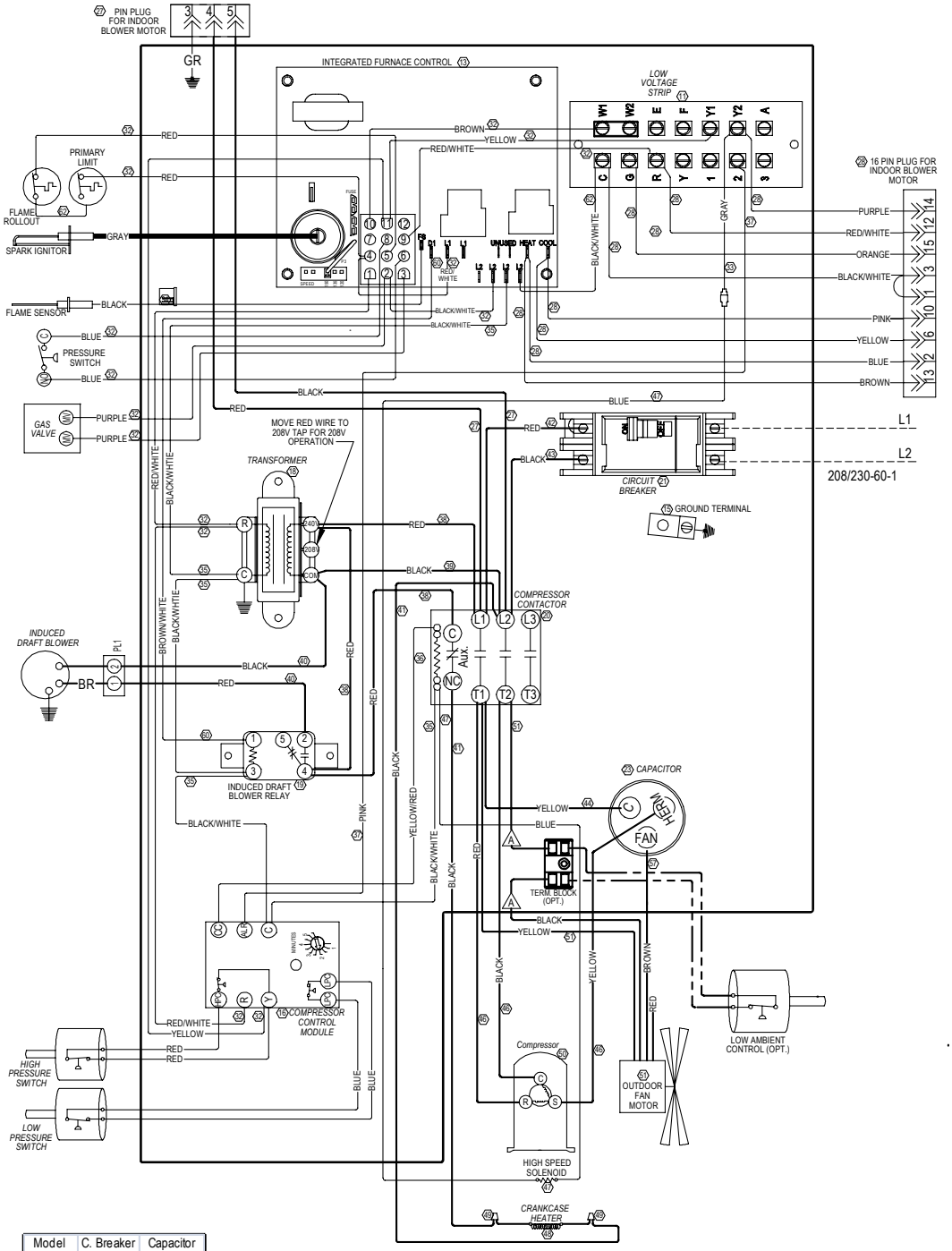

Model	C. Breaker	Capacitor
WG3S2-A	40A	40+10/370
WG4S2-A	45A	30+10/370
WG5S2-A	60A	40+10/440

USE COPPER CONDUCTORS SUITABLE FOR AT LEAST 75° C

IF ANY ORIGINAL WIRE AS SUPPLIED WITH THE APPLIANCE MUST BE REPLACED, IT MUST BE REPLACED WITH WIRING MATERIAL HAVING A TEMPERATURE RATING OF AT LEAST 105° C EXCEPT THE IGNITION CABLE WHICH IS 250°C HIGH VOLTAGE CABLE

Wire Identification numbers for Bard use only.

	Factory	Field	Optional
High Voltage			
Low Voltage			

A WIRES CONNECT IF OPTION NOT USED

4085-156 A

WG3S2-A, WG4S2-A, WG5S2-A 208/230/60/1

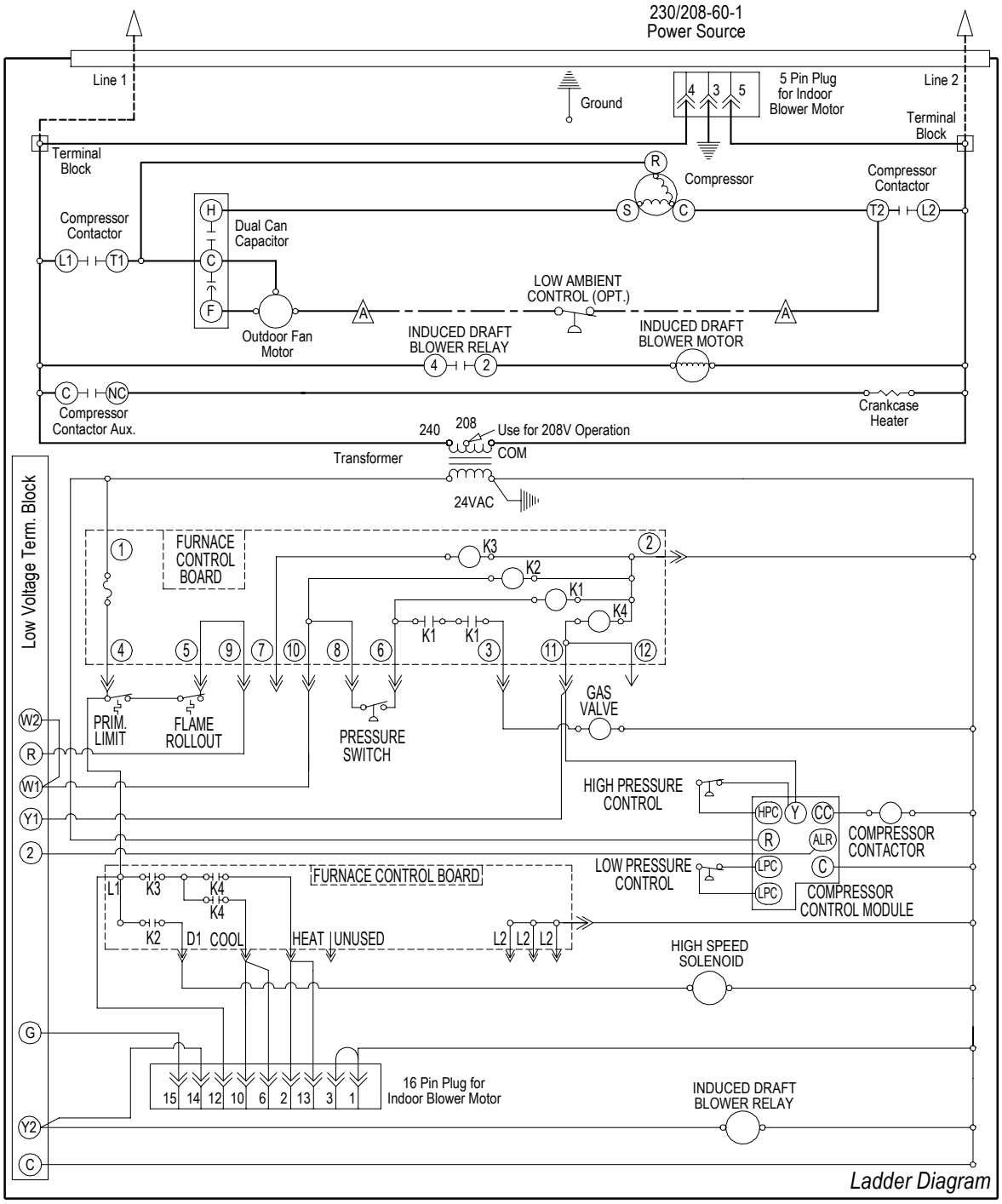

	Factory	Optional
High Voltage	———	— – —
Low Voltage	———	— – —

A
Wires Connect if Option Not Used

4085-157

WG3S2-A, WG4S2-A, WG5S2-A 208/230/60/1

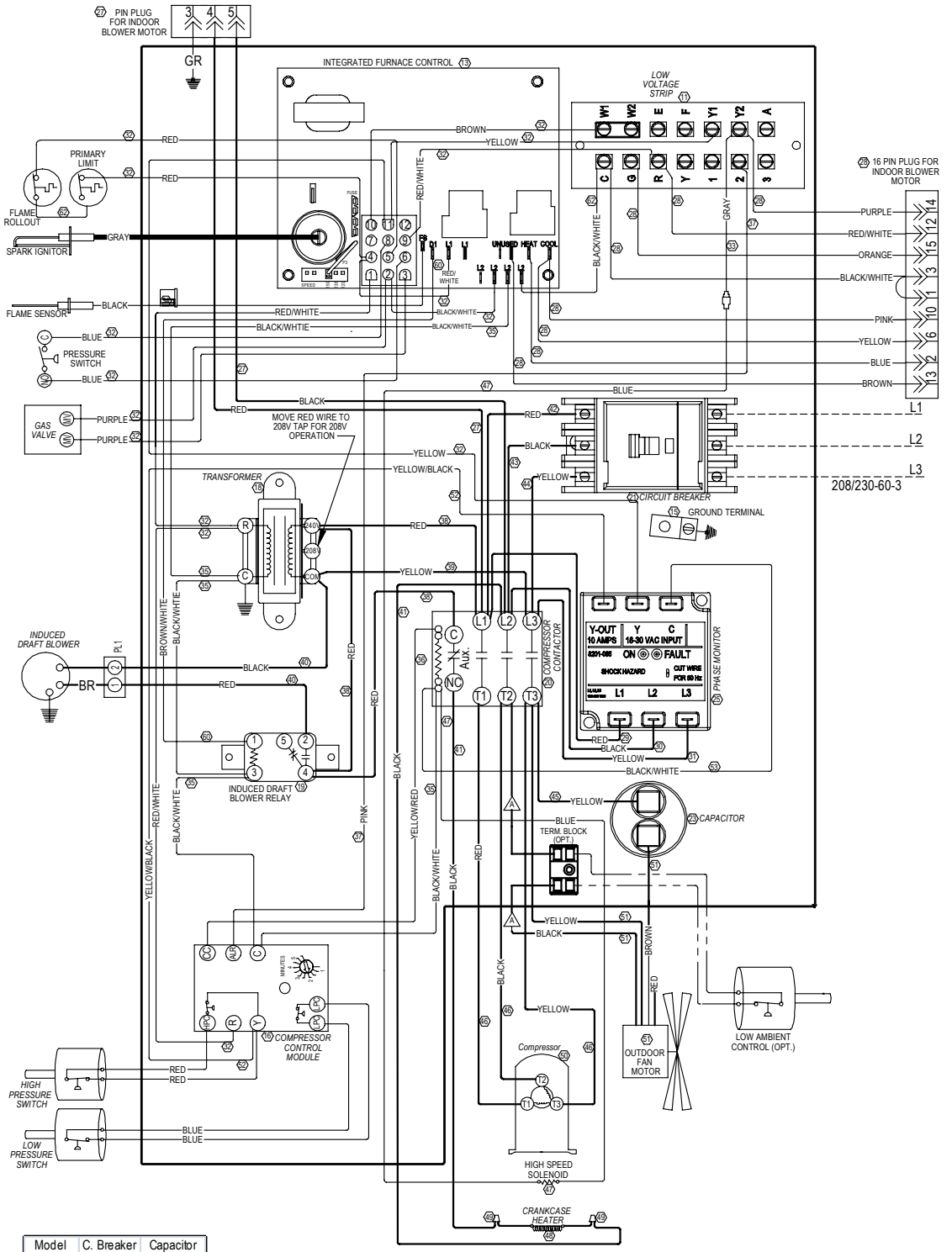

Model	C. Breaker	Capacitor
WG3S2-B	30A	10/370
WG4S2-B	40A	10/370
WG5S2-B	40A	10/370

USE COPPER CONDUCTORS SUITABLE FOR AT LEAST 75° C

IF ANY ORIGINAL WIRE AS SUPPLIED WITH THE APPLIANCE MUST BE REPLACED, IT MUST BE REPLACED WITH WIRING MATERIAL HAVING A TEMPERATURE RATING OF AT LEAST 105° C EXCEPT THE IGNITION CABLE WHICH IS 250°C HIGH VOLTAGE CABLE

99 Wire Identification numbers for Bard use only.

	Factory	Field	Optional
High Voltage			
Low Voltage			

A WIRES CONNECT IF OPTION NOT USED

4085-254 A

WG3S2-B, WG4S2-B, WG5S2-B 208/230/60/3

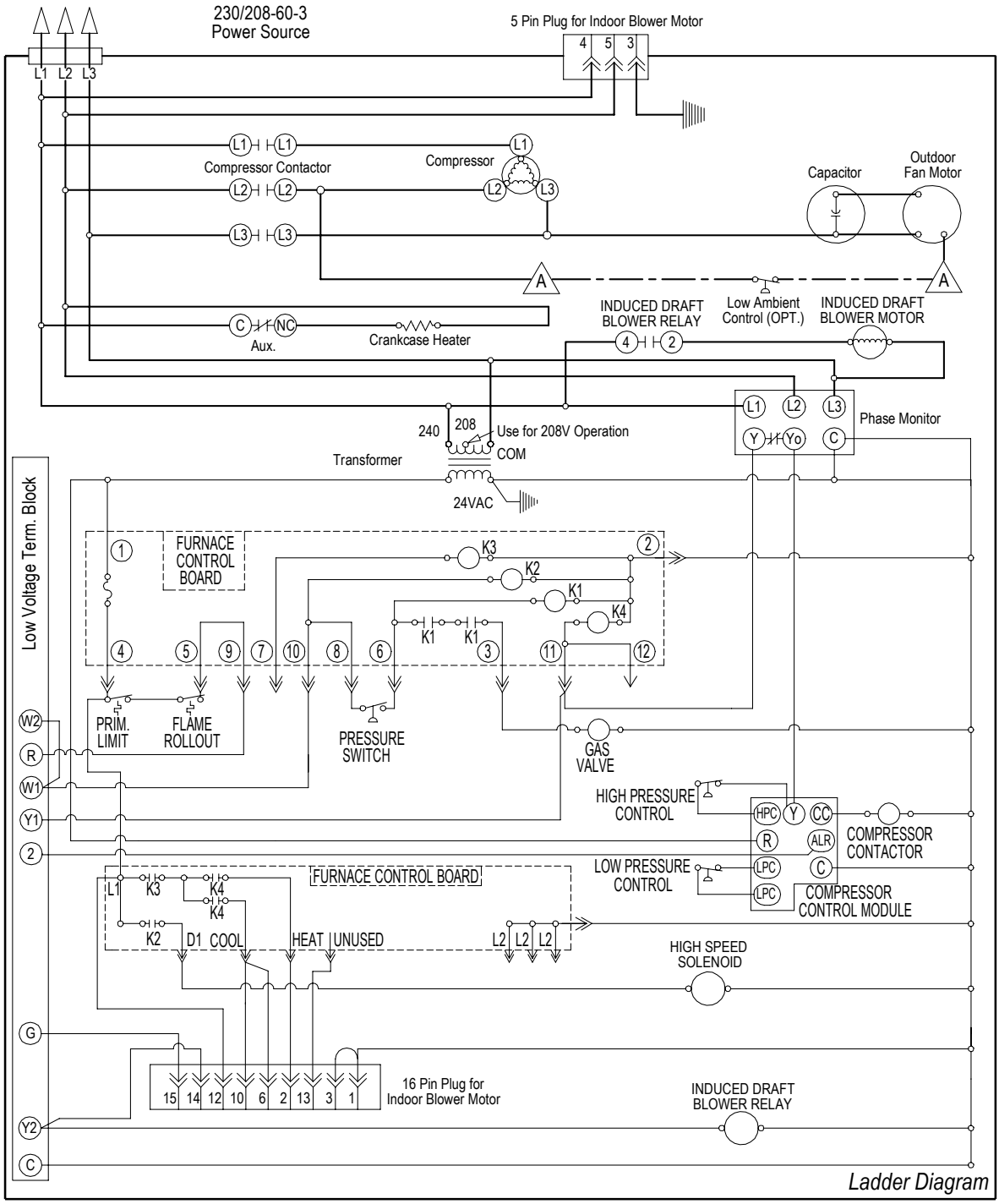

	Factory	Optional
High Voltage	———	— - —
Low Voltage	———	— - —

A
Wires Connect if Option Not Used

4085-269

WG3S2-B, WG4S2-B, WG5S2-B 208/230/60/3

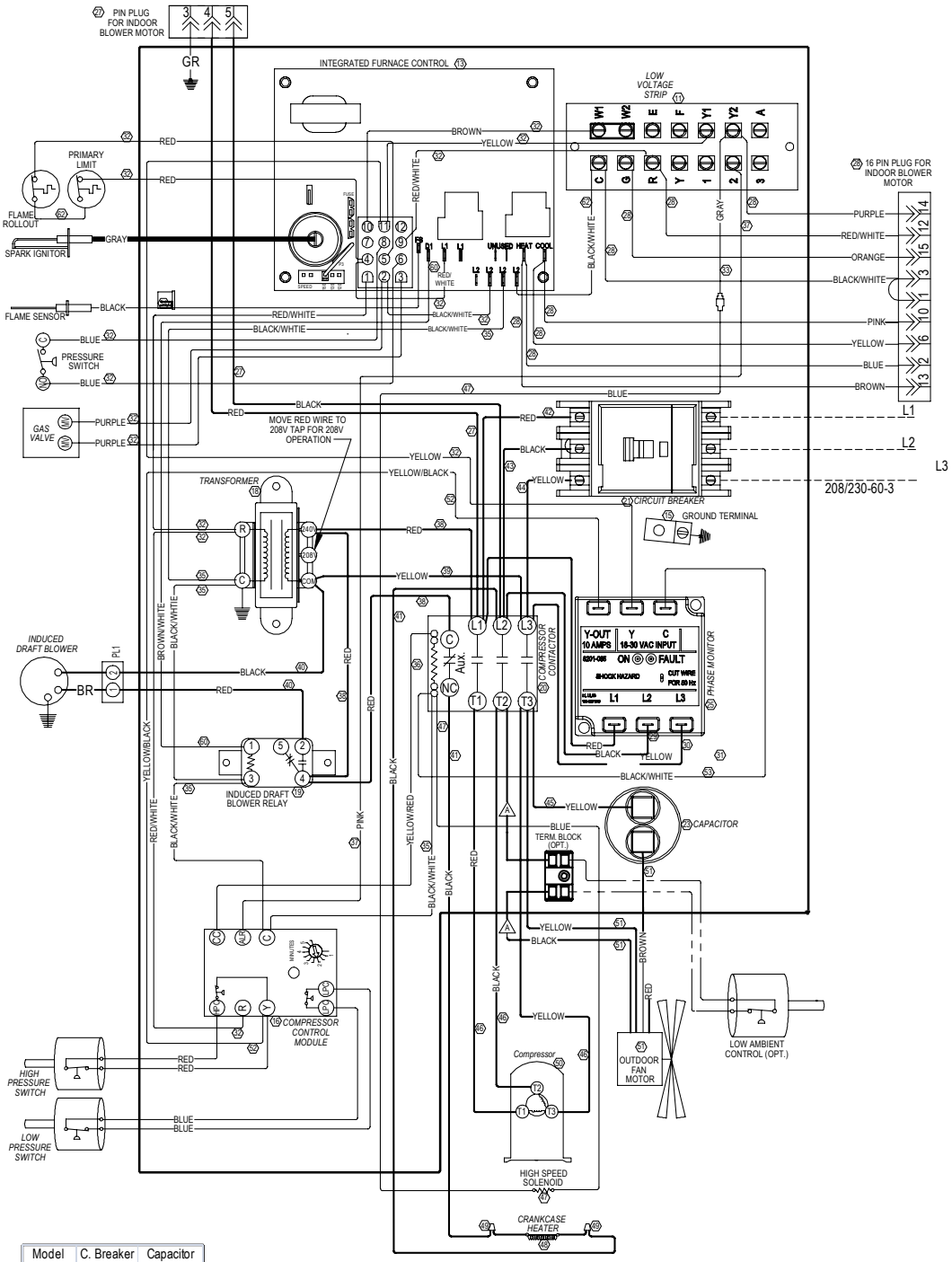

Model	C. Breaker	Capacitor
WG3S2-B	30A	10/370
WG4S2-B	40A	10/370
WG5S2-B	40A	10/370

USE COPPER CONDUCTORS SUITABLE FOR AT LEAST 75° C

IF ANY ORIGINAL WIRE AS SUPPLIED WITH THE APPLIANCE MUST BE REPLACED, IT MUST BE REPLACED WITH WIRING MATERIAL HAVING A TEMPERATURE RATING OF AT LEAST 105° C EXCEPT THE IGNITION CABLE WHICH IS 250°C HIGH VOLTAGE CABLE

	Factory	Field	Optional
High Voltage			
Low Voltage			

A WIRES CONNECT IF OPTION NOT USED

4085-255 A

WG3S2-B, WG4S2-B, WG5S2-B 208/230/60/3

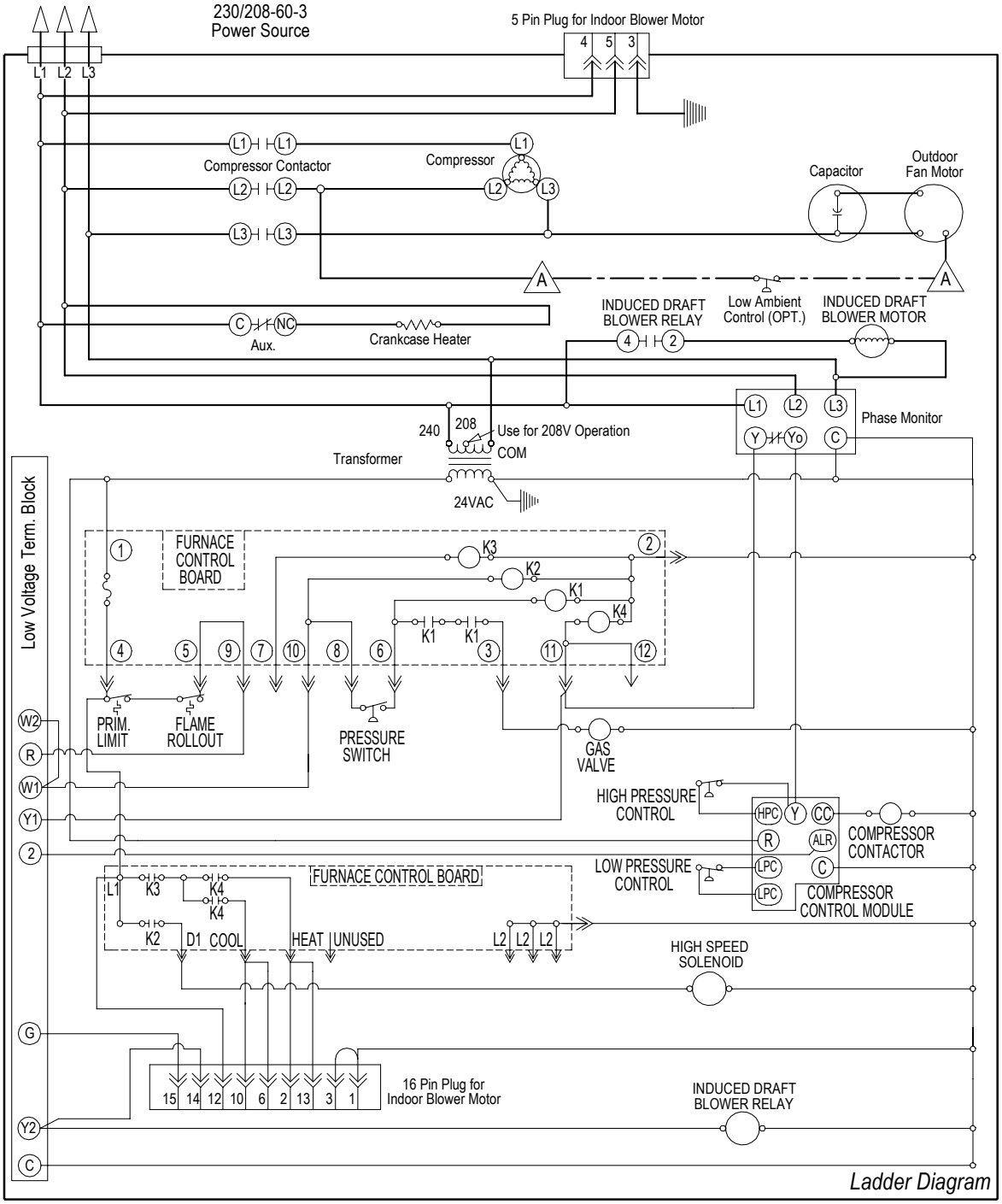

	Factory	Optional
High Voltage	———	— — —
Low Voltage	———	— — —

A
Wires Connect if Option Not Used

4085-270

WG3S2-B, WG4S2-B, WG5S2-B 208/230/60/3

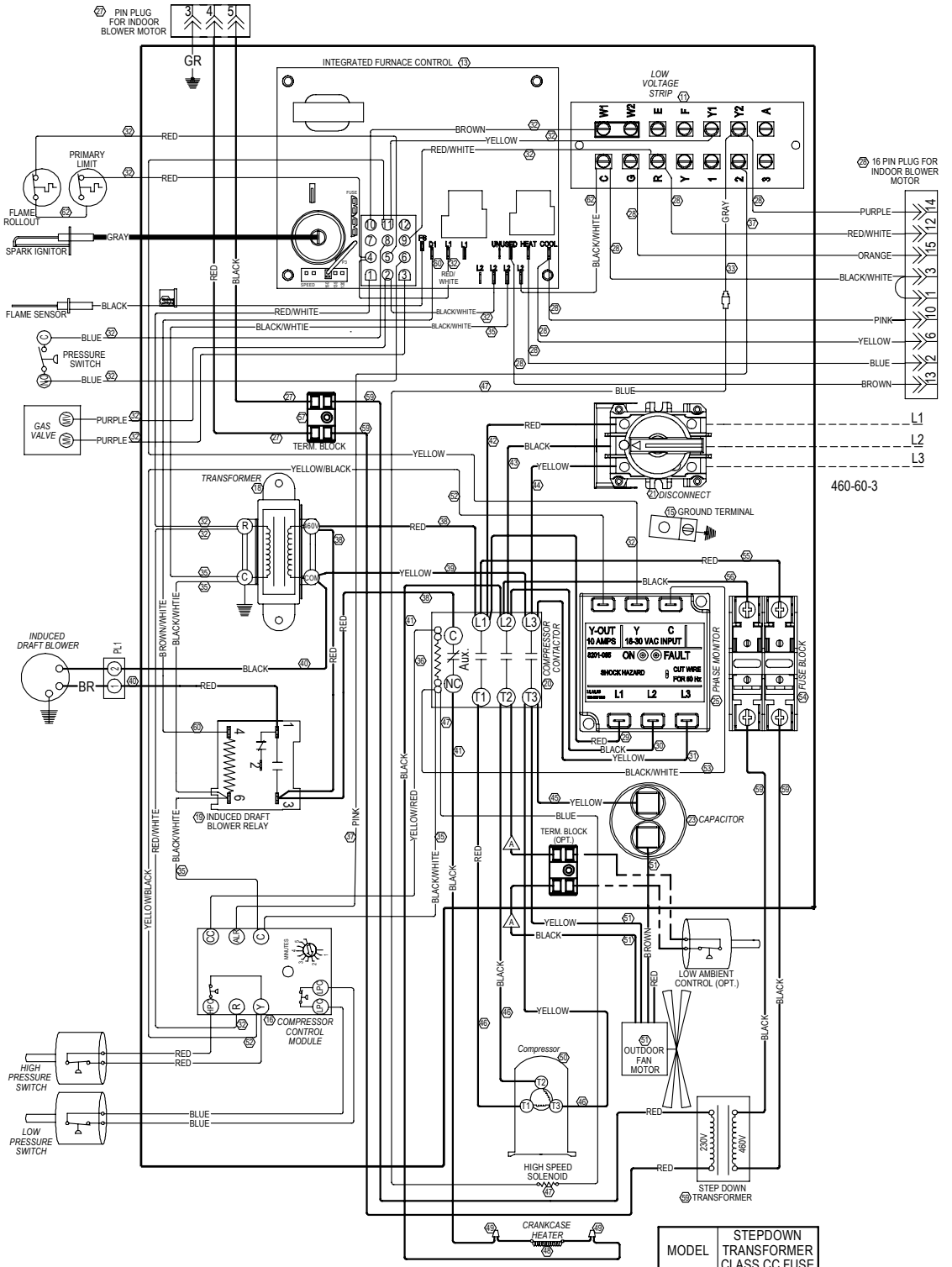

Model	Capacitor
WG3S2-C	15/370
WG4S2-C	15/370
WG5S2-C	15/370

99 Wire Identification numbers for Bard use only.

USE COPPER CONDUCTORS SUITABLE FOR AT LEAST 75° C

MODEL	STEPDOWN TRANSFORMER CLASS CC FUSE
WG3S	5 A
WG4S	7 A
WG5S	7 A

IF ANY ORIGINAL WIRE AS SUPPLIED WITH THE APPLIANCE MUST BE REPLACED, IT MUST BE REPLACED WITH WIRING MATERIAL HAVING A TEMPERATURE RATING OF AT LEAST 105° C EXCEPT THE IGNITION CABLE WHICH IS 250°C HIGH VOLTAGE CABLE

	Factory	Field	Optional
High Voltage			
Low Voltage			

A WIRES CONNECT IF OPTION NOT USED

WG3S2-C, WG4S2-C, WG5S2-C 460/60/3

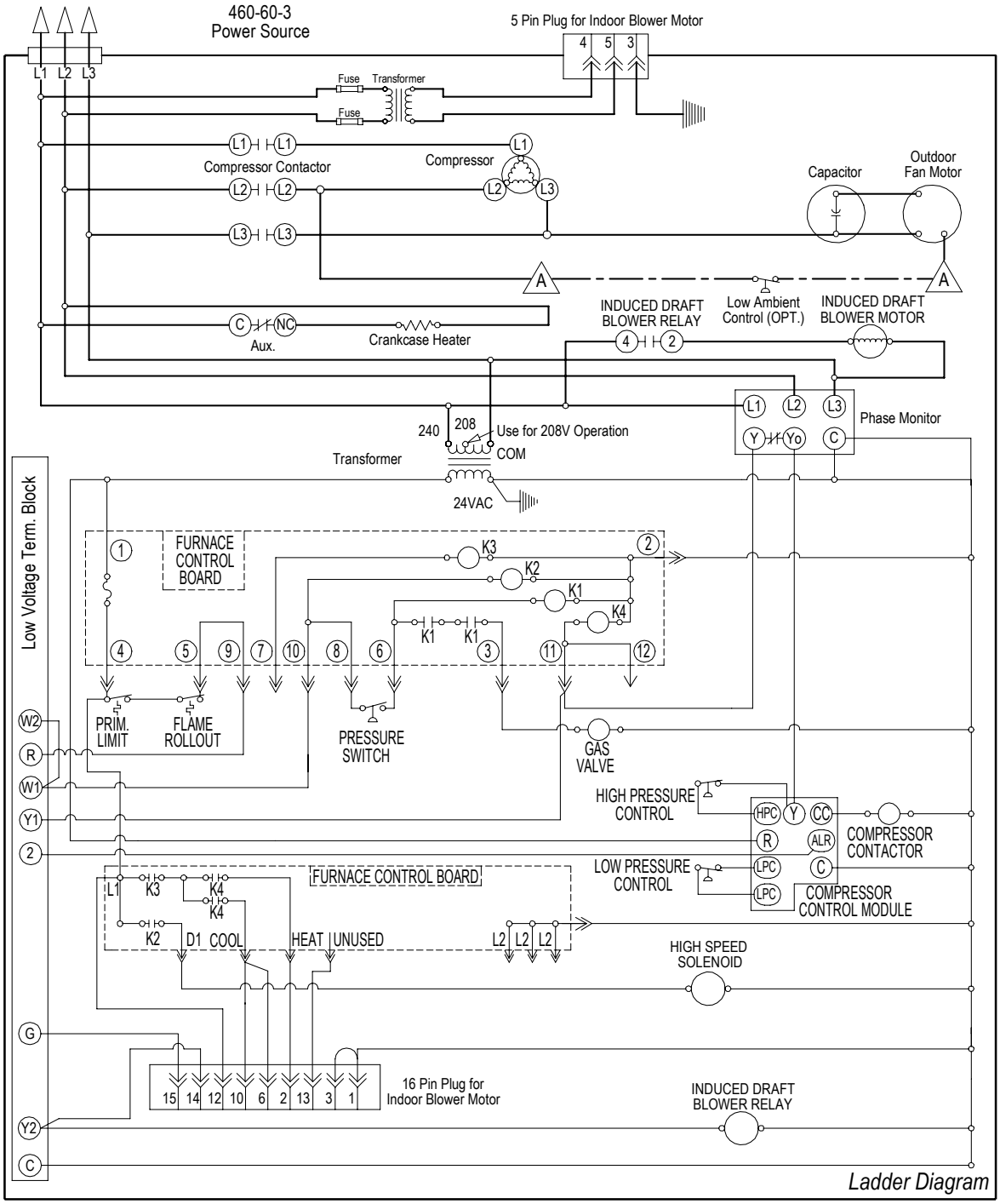

	Factory	Optional
High Voltage	———	— – —
Low Voltage	———	— – —

A
Wires Connect if Option Not Used

4085-392

WG3S2-C, WG4S2-C, WG5S2-C 460/60/3

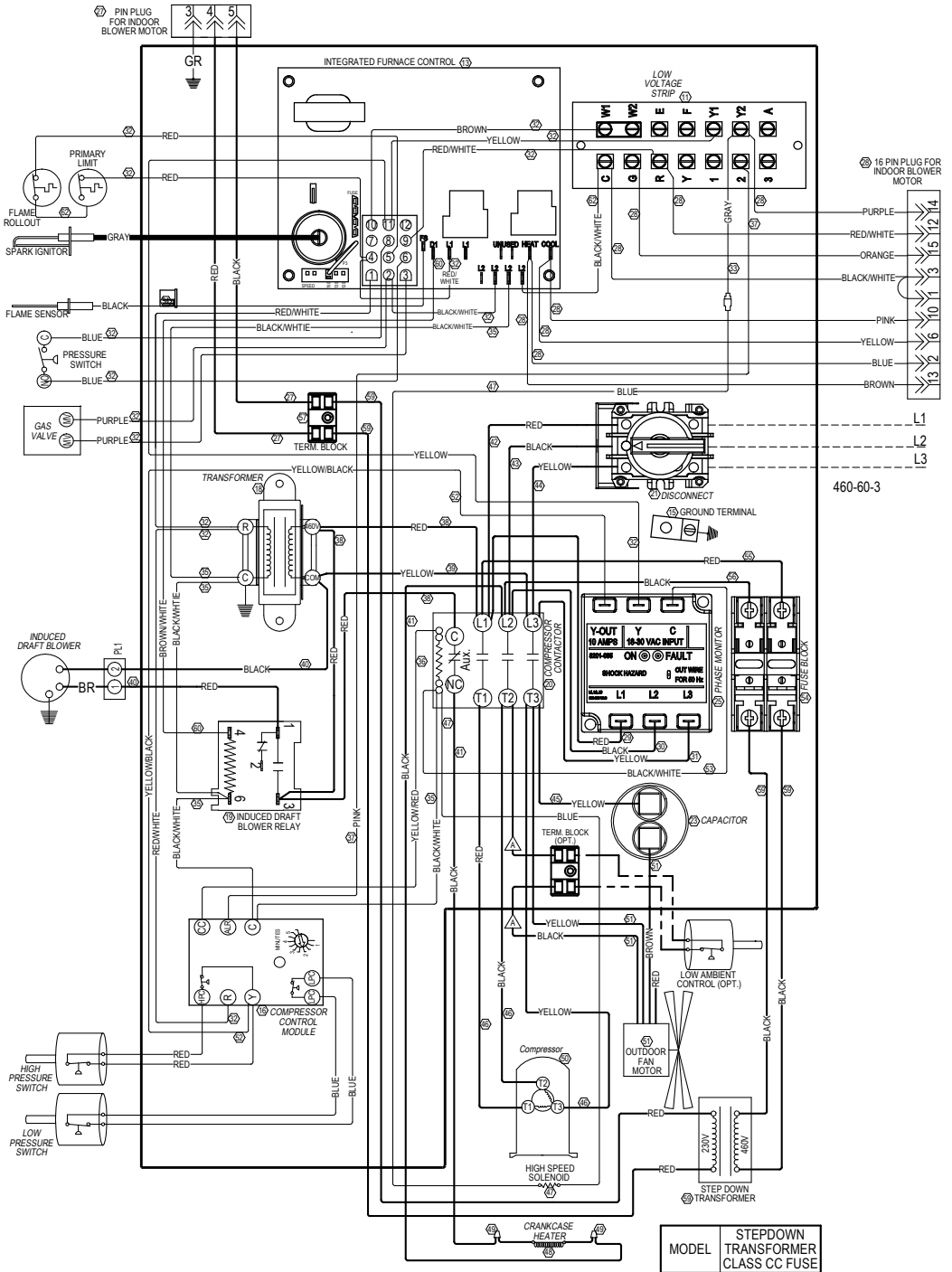

Model	Capacitor
WG3S2-C	15/370
WG4S2-C	15/370
WG5S2-C	15/370

99 Wire Identification numbers for Bard use only.

USE COPPER CONDUCTORS SUITABLE FOR AT LEAST 75° C

IF ANY ORIGINAL WIRE AS SUPPLIED WITH THE APPLIANCE MUST BE REPLACED, IT MUST BE REPLACED WITH WIRING MATERIAL HAVING A TEMPERATURE RATING OF AT LEAST 105° C EXCEPT THE IGNITION CABLE WHICH IS 250°C HIGH VOLTAGE CABLE

MODEL	STEPDOWN TRANSFORMER CLASS CC FUSE
WG3S	5 A
WG4S	7 A
WG5S	7 A

	Factory	Field	Optional
High Voltage			
Low Voltage			

A WIRES CONNECT IF OPTION NOT USED

4085-378 A

WG3S2-C, WG4S2-C, WG5S2-C 460/60/3

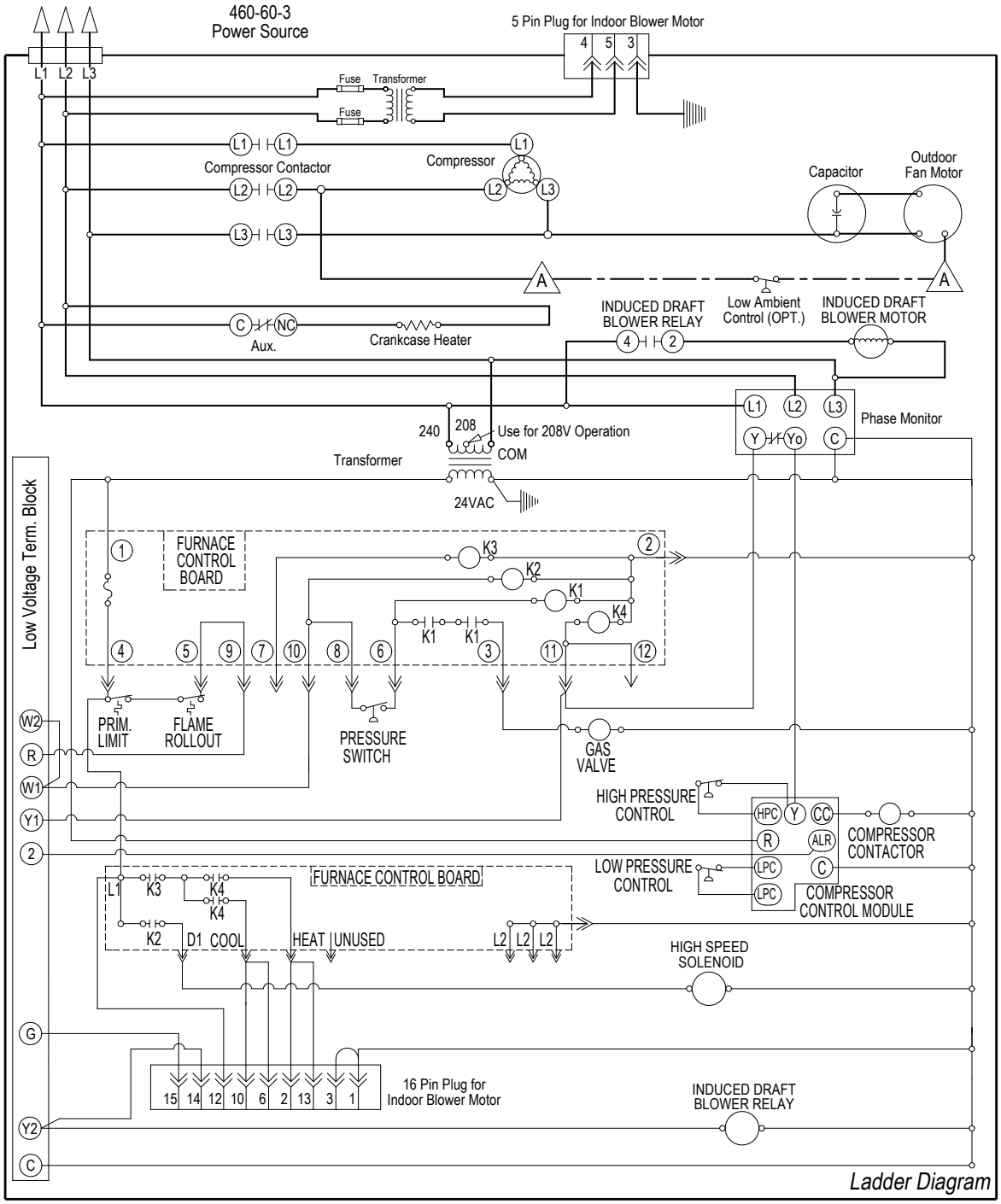

	Factory	Optional
High Voltage	———	— – —
Low Voltage	———	— – —

A
Wires Connect if Option Not Used

4085-393

WG3S2-C, WG4S2-C, WG5S2-C 460/60/3