INSTALLATION INSTRUCTIONS

I-TEC® Series
Packaged Air Conditioner

Models:

I30A1DA	I36A1DA	I42A1DA	I48A1DA	I60A1DA
I30A1DB	I36A1DB	I42A1DB	I48A1DB	I60A1DB
I30A1DC	I36A1DC	I42A1DC	I48A1DC	I60A1DC

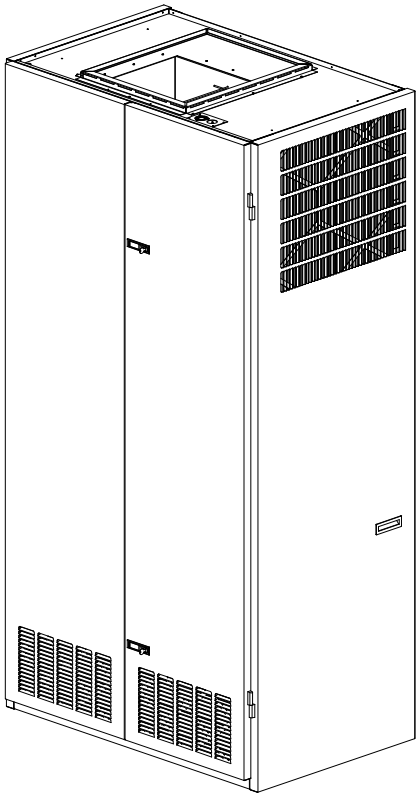

MIS-2957 A

Bard® SINCE 1914
Climate Control Solutions

Bard Manufacturing Company, Inc.
Bryan, Ohio 43506
www.bardhvac.com

Manual: 2100-597Q
Supersedes: 2100-597P
Date: 5-14-21

CONTENTS

Getting Other Information and Publications 4
General 5

I-TEC General Information 6
I-TEC Model Nomenclature 6
Shipping Damage 9
Unit Removal From Skid 9
Handling Unit After Removal From Skid 9
Required Steps After Final Placement 10
Minimum Installation Height 10
Securing Unit to Structure 10
Duct Work.....18
Filters 18
Condensate Drain 19
With No Vent Option 19
With Commercial Room Ventilator 19
With Energy Recovery Ventilator.....19

Installation Instructions.....22
Mounting the Unit 22
Wiring – Main Power 22
Wiring – Low Voltage Wiring.....22
Low Voltage Connections.....23
General 23

Start Up 31
General 31
Topping Off System Charge 31
Safety Practices 31
Description of Standard Equipment.....31
Important Installer Note.....32
Phase Monitor.....32
Three Phase Scroll Compressor Start Up Information.. 32
Service Hints 32
Sequence of Operation.....32
Compressor Control Module 33
Pressure Service Ports 34
Lowering Outdoor Fan Speed for Sound 34

I-TEC Commercial Room Ventilator System (Vent Code "M") 35
General Description 35
Control Wiring 35
Recommended Control Sequences 35
Setting the Ventilation CFM Levels.....35

I-TEC Combination CRV and Economizer Ventilation System (Vent Code "N") 38
General Description 38
Control Wiring 38
Setting the Ventilation CFM Levels.....39
I-TEC Economizer Sequence of Operation 40
Heating Mode Operation 40
Ventilation Mode 40

I-TEC Modulating Commercial Room Ventilator System (Vent Code "Q") 41
General Description 41
Control Wiring 41
Recommended Control Sequences 41
Changing Ventilation CFM Rates in Manual Mode 42
Changing to Fully Modulating Mode 42
Configuring Bard Part #8403-096 CO_2 Control for CRV Modulating Control 46

I-TEC Energy Recovery Ventilator System (Vent Code "R").....49
General Description 49
Control Wiring 49
Recommended Control Sequences 49
Changing Ventilation CFM Rates in Manual Mode 50
Changing to Fully Modulating Mode 50
Configuring Bard Part #8403-096 CO_2 Control for ERV Modulating Control 55
Energy Recovery Ventilator Maintenance.....57

Troubleshooting 60
Checking Temperature Sensor.....60
Troubleshooting Condensate Overflow Systems 61
Troubleshooting ECM™ 142R Outdoor Fan Motors 62
Troubleshooting ECM™ Indoor Blower Motors 64
Fan Blade Setting Dimensions.....67
Refrigerant Charge.....67

Figures

Figure 1 Unit Dimensions 8
Figure 2A Unit on Lift 9
Figure 2B Unit Side 9
Wall Mounting Bracket Location 10
Bracket Wall Section View 11
Wood Framed Install 11
Figure 3 Center of Gravity 12
Figure 4 Req'd Clearances & Recomm. Access 13
Figure 5 Removal of Air Duct 14
Figure 6 Compressor Shipping Bolts 14
Figure 7A Ducted Application 15
Figure 7B 3" Riser Application 16
Figure 7C 6" Riser Application 17
Figure 8 Supply Duct Connections 18
Figure 9 Filter Location 18
Figure 10 Drain Locations 19
Figure 11A Unit Mounting 20
Figure 11B Unit Mounting 21
Figure 12 Component Location 22
Figure 13 Basic A/C w/No Vent Pkg ("B" Vent). 24
Figure 14 A/C w/CRV, without CO_2 Control ("M" Vent) 25
Figure 15 A/C with CRV & CO_2 Control ("M" Vent) ... 26
Figure 16 A/C with ERV, w/o CO_2 Control ("R" Vent) 27
Figure 17 A/C with ERV & CO_2 Control ("R" Vent).... 28
Figure 18 A/C w/ERV & CO_2 Control (Fully Mod.) ("R" Vent) 29
Figure 19 AC w/Comb. CRV & DB Econ. ("N" Vent)... 30
Figure 20 Compressor Logic Control Board 34
Figure 21 CRV Motor Speed/CFM Configuration 36
Figure 22 CRV Speed Change Terminal Access 37
Figure 23 Economizer Control Circuit 38
Figure 24 Motor Speed/CFM Configuration 39
Figure 25A CRV Manual Mode "M" Terminal 43
Figure 25B CRV Mod. Mode "P" Terminal 43
Figure 26 Ventilation Airflow Diagram 44
Figure 27 CRV Access 45
Figure 28 Control Board Configuration/Setting 46
Figure 29A ERV Manual Mode "M" Terminal 52
Figure 29B ERV Mod. Mode "P" Terminal 52
Figure 30 Ventilation Airflow Diagram 53
Figure 31 ERV Access 54
Figure 32 Control Board Configuration/Setting 55
Figure 33 Hub Assembly w/Ball Bearings 59
Figure 34 Indoor Condensate Overflow Switch 61
Figure 35 Outdoor Condensate Sensor 61
Figure 36 LED Fault Illumination 61
Figure 37 Control Disassembly 65
Figure 38 Winding Test 65
Figure 39 Drip Loop 65
Figure 40 Control Connector Motor Half 66
Figure 41 Fan Blade Position 67

Tables

Table 1A Factory Built-In Electric Heat Table 6
Table 1B Indoor Blower Performance 6
Table 2 Electrical Specifications 7
Table 3 Operating Voltage Range 22
Table 4 Wall Thermostats 23
Low Voltage Connections for DDC Control 23
Performance & Application Data: Summer Cooling & Winter Heating..... 51
Table 5 Temperature (F) vs Resistance (R) of Temperature Sensor 60
Table 6 Troubleshooting ECM™ 142R Outdoor Fan Motor 63
Table 7 Cooling Mode 63
Troubleshooting ECM™ Blower Motors... 66
Power Connector 66
Table 8 Full Load Cooling Pressure/Temperature. 68
Table 9 Part Load Cooling Pressure/Temperature 69

GETTING OTHER INFORMATION AND PUBLICATIONS

These publications can help when installing the furnace. They can usually be found at the local library or purchased directly from the publisher. Be sure to consult the current edition of each standard.

National Electrical Code ..... ANSI/NFPA 70

Standard for the Installation ..... ANSI/NFPA 90A
of Air Conditioning and Ventilating Systems

Standard for Warm Air..... ANSI/NFPA 90B
Heating and Air Conditioning Systems

Load Calculation for ..... ACCA Manual J or
Winter and Summer Manual N
Air Conditioning

Low Pressure, Low Velocity ..... ACCA Manual D or
Duct System Design Manual Q
Winter and Summer Air Conditioning

For more information, contact these publishers:

ACCA **Air Conditioning Contractors of America**
1712 New Hampshire Avenue
Washington, DC 20009
Telephone: (202) 483-9370
Fax: (202) 234-4721

ANSI **American National Standards Institute**
11 West Street, 13th Floor
New York, NY 10036
Telephone: (212) 642-4900
Fax: (212) 302-1286

ASHRAE **American Society of Heating, Refrigeration, and Air Conditioning Engineers, Inc.**
1791 Tullie Circle, N.E.
Atlanta, GA 30329-2305
Telephone: (404) 636-8400
Fax: (404) 321-5478

NFPA **National Fire Protection Association**
Batterymarch Park
P.O. Box 9101
Quincy, MA 02269-9901
Telephone: (800) 344-3555
Fax: (617) 984-7057

GENERAL

The equipment covered in this manual is to be installed by trained, experienced service and installation technicians.

> ***The I-TEC must be installed with the Bard manufactured IWS wall sleeve and ILG louver grille accessories. These are sold as separate accessories. Any substitutions will void the manufacturer's warranty.***

The unit is designed for use with or without ductwork. For use without ductwork, Plenum Box IPBDF8-color (8" height) or IPBDF12-color (12" height) is recommended.

These instructions explain the recommended method to install the air cooled self-contained unit and the electrical connections to it.

These instructions and any instructions packaged with any separate equipment required to make up the entire heating and air conditioning system should be carefully read before beginning the installation. Note particularly "Start Procedure" and any tags and/or labels attached to the equipment.

While these instructions are intended as a general recommended guide, they do not supersede any national and/or local codes in any way. Authorities having jurisdiction should be consulted before the installation is made. See page 4 for information on codes and standards.

Size of unit for a proposed installation should be based on heat loss or heat gain calculation made according to methods of Air Conditioning Contractors of America (ACCA). The air duct should be installed in accordance with the Standards of the National Fire Protection Systems of Other Than Residence Type, NFPA No. 90A, and Residence Type Warm Air Heating and Air Conditioning Systems, NFPA No. 90B. Where local regulations are at a variance with instructions, installer should adhere to local codes.

ANSI Z535.5 Definitions:

- **DANGER:** Indicate[s] a hazardous situation which, if not avoided, will result in death or serious injury. The signal word "DANGER" is to be limited to the most extreme situations. DANGER [signs] should not be used for property damage hazards unless personal injury risk appropriate to these levels is also involved.
- **WARNING:** Indicate[s] a hazardous situation which, if not avoided, could result in death or serious injury. WARNING [signs] should not be used for property damage hazards unless personal injury risk appropriate to this level is also involved.
- **CAUTION:** Indicate[s] a hazardous situation which, if not avoided, could result in minor or moderate injury. CAUTION [signs] without a safety alert symbol may be used to alert against unsafe practices that can result in property damage only.
- **NOTICE:** [this header is] preferred to address practices not related to personal injury. The safety alert symbol shall not be used with this signal word. As an alternative to "NOTICE" the word "CAUTION" without the safety alert symbol may be used to indicate a message not related to personal injury.

I-TEC Series General Information

I-TEC MODEL NOMENCLATURE

I 36 A 1 D A 0Z R P 4 X X 2

MODEL SERIES

NOMINAL CAPACITY
30 – 30,000 BTUH
36 – 36,000
42 – 42,000
48 – 48,000
60 – 60,000

SYSTEM TYPE:
AIR CONDITIONING

REVISION

SPECIAL UNITS
D – Dehum.

VOLTS & PHASE
A – 230/208, 60-1
B – 230/208, 60-3
C – 460-60-3

ELECTRIC HEAT
0Z – No heat w/breaker
04 – 4KW 1-Phase
05 – 5KW 1-Phase
06 – 6KW 3-Phase
09 – 9KW 3-Phase
10 – 10KW 1-Phase
15 – 15KW 1 & 3-Phase
18 – 18KW 3-Phase
20 – 20KW 1-Phase

VENTILATION OPTIONS
B – Blank-Off Plate
M – Multi-Speed CRV
N – Multi-Speed CRV with Economizer Mode
Q – Modulating CRV (0-10Vdc)
R – ERV

FILTER OPTIONS
P – 2" Pleated MERV 8
M – 2" Pleated MERV 11
N – 2" Pleated MERV 13
B – NPBI TECH + 2" Pleated MERV 13
A – UV-C + 2" Pleated MERV 13

COLOR OPTIONS
X – Beige paint
1 – White paint
4 – Gray paint

RESERVED

COIL TREATMENT
X – Std. Hydrophilic Fin Evap. & Uncoated Alum. Cond. Coil
1 – Phenolic Coated ID Coil
2 – Phenolic Coated OD Coil
3 – Phenolic Coated ID & OD Coil

CONTROLS
X – 24V Terminal Block Only w/o CompleteStat™
1 – CompleteStat™ THOA (Temp, Humidity & Occupancy)
2 – CompleteStat™ THOA w/CO_2
3 – CompleteStat™ THOA w/Ethernet
4 – CompleteStat™ THOA w/CO_2 & Ethernet

Note: CompleteStat™ must be field installed & wired. All units have 24V terminal block.

TABLE 1A
Factory Built-In Electric Heat Table

Models	I30A1DA		I30A1DB		I30A1DC	I36A1DA I42A1DA		I36A1DB I42A1DB		I36A1DC I42A1DC	I48A1DA		I48A1DB I60A1DB		I48A1DC I60A1DC	I60A1DA	
KW	240V-1	208V-1	240V-3	208V-3	460V-3	240V-1	208V-1	240V-3	208V-3	460V-3	240V-1	208V-1	240V-3	208V-3	460V-3	240V-1	208V-1
	BTUH	BTUH	BTUH	BTUH	BTUH	BTUH	BTUH	BTUH	BTUH	BTUH	BTUH	BTUH	BTUH	BTUH	BTUH	BTUH	BTUH
4.0											13,652	10,239					
5.0	17,065	12,799				17,065	12,799				17,065	12,799				17,065	12,799
6.0			20,478	15,359	20,478			20,478	15,359	20,478			20,478	15,359	20,478		
9.0			30,717	23,038	30,717			30,717	23,038	30,717			30,717	23,038	30,717		
10.0	34,130	25,598				34,130	25,598				34,130	25,598				34,130	25,598
15.0						51,195	38,396	51,195	38,396	51,195	51,195	38,396	51,195	38,396	51,195	51,195	38,396
18.0													61,434	46,076	61,434		
20.0											68,260	51,195				68,260	51,195

TABLE 1B
Indoor Blower Performance ①

MODEL	Rated ESP	MAX ESP	② Continuous Airflow	Rated 2nd Stage CFM	Rated 1st Stage CFM	③ 4 - 10KW CFM	④ 15 - 20KW CFM
I30A1D	.15	0.50	500	900	650	700	1050
I36A1D	.15	0.50	600	1150	850	700	1050
I42A1D	.20	0.50	650	1300	950	700	1050
I48A1D	.20	0.50	725	1500	1050	700	1400
I60A1D	.20	0.50	850	1700	1200	700	1400

① Motor will deliver consistent CFM through voltage supply range with no deterioration.
② Continuous fan CFM is the total air being circulated during continuous fan mode.
③ Will occur automatically with a call for "W3" or "Emergency Heat" signal from the thermostat.

TABLE 2
Electrical Specifications

Model	Rated Volts & Phase	No. Field Power Circuits	Single Circuit				Dual Circuit							
			① Minimum Circuit Ampacity	② Maximum External Fuse or Ckt. Brkr.	③ Field Power Wire Size	③ Ground Wire	① Minimum Circuit Ampacity		② Maximum External Fuse or Ckt. Breaker		③ Field Power Wire Size		③ Ground Wire Size	
							Ckt. A	Ckt. B	Ckt. A	Ckt. B	Ckt. A	Ckt. B	Ckt. A	Ckt. B
I30A1DA0Z	230/208-1	1	22	35	8	10								
A05		1	32	35	8	10								
A10		1	58	60	6	10								
I30A1DB0Z	230/208-3	1	17	25	10	10								
B06		1	23	25	10	10								
B09		1	32	35	10	10								
I30A1DC0Z	460-3	1	9	10	14	14								
C06		1	13	15	14	14								
C09		1	18	20	12	12								
I36A1DA0Z	230/208-1	1	26	40	8	10								
A05		1	32	40	8	10								
A10		1	58	60	6	10								
A15		1 or 2	84	90	4	8	26	52	40	60	8	6	10	10
I36A1DB0Z	230/208-3	1	22	30	10	10								
B06		1	23	30	10	10								
B09		1	32	35	8	10								
B15		1	51	60	6	10								
I36A1DC0Z	460-3	1	11	15	14	14								
C06		1	13	15	14	14								
C09		1	18	20	12	12								
C15		1	28	30	10	10								
I42A1DA0Z	230/208-1	1	30	45	8	10								
A05		1	32	40	8	10								
A10		1	58	60	6	10								
A15		1 or 2	82	90	4	8	56	52	60	60	6	6	10	10
I42A1DB0Z	230/208-3	1	25	35	8	10								
B06		1	25	35	8	10								
B09		1	32	35	8	10								
B15		1	52	60	6	10								
I42A1DC0Z	460-3	1	12	15	14	14								
C06		1	14	15	14	14								
C09		1	19	20	12	12								
C15		1	28	30	10	10								
I48A1DA0Z	230/208-1	1	34	50	8	10								
A04		1	34	50	8	10								
A05		1	34	50	8	10								
A10		1	59	60	6	10								
A15		1 or 2	85	90	3	8	35	52	45	60	8	6	10	10
A20		1 or 2	110	110	2	6	59	52	60	60	6	6	10	10
I48A1DB0Z	230/208-3	1	26	35	8	10								
B06		1	26	35	8	10								
B09		1	34	35	8	10								
B15		1	53	60	6	10								
B18		1	53	60	6	10								
I48A1DC0Z	460-3	1	12	15	12	12								
C06		1	14	15	12	12								
C09		1	19	20	12	12								
C15		1	29	30	10	10								
C18		1	33	35	8	10								
I60A1DA0Z	230/208-1	1	44	60	8	10								
A05		1	44	60	6	10								
A10		1	59	60	6	10								
A15		1 or 2	96	100	3	8	44	52	60	60	8	6	10	10
A20		1 or 2	112	120	2	6	60	52	60	60	6	6	10	10
I60A1DB0Z	230/208-3	1	31	45	8	10								
B06		1	31	45	8	10								
B09		1	35	45	8	10								
B15		1	58	60	6	10								
B18		1 or 2	63	70	6	8	31	54	45	60	8	6	10	10
I60A1DC0Z	460-3	1	15	20	12	12								
C06		1	15	20	12	12								
C09		1	19	20	12	12								
C15		1	29	30	10	10								
C18		1	29	30	10	10								

① These "Minimum Circuit Ampacity" values are to be used for sizing the field power conductors. Refer to the National Electrical code (latest version), Article 310 for power conductor sizing. ***CAUTION:*** *When more than one field power circuit is run through one conduit, the conductors must be derated. Pay special attention to note 8 of Table 310 regarding Ampacity Adjustment Factors when more than three (3) current carrying conductors are in a raceway.*

② Maximum size of the time delay fuse or circuit breaker for protection of field wiring conductors.

③ Based on 75°copper wire. All wiring must conform to the National Electrical Code and all local codes.

NOTE: *The Maximum Overcurrent Protection (MOCP) value listed is the maximum value as per UL 1995 calculations for MOCP (branch-circuit conductor sizes in this chart are based on this MOCP). The actual factory-installed overcurrent protective device (circuit breaker) in this model may be lower than the maximum UL 1995 allowable MOCP value, but still above the UL 1995 minimum calculated value or Minimum Circuit Ampacity (MCA) listed.*

IMPORTANT: *While this electrical data is presented as a guide, it is important to electrically connect properly sized fuses and conductor wires in accordance with the National Electrical Code and all local codes.*

FIGURE 1
Unit Dimenions

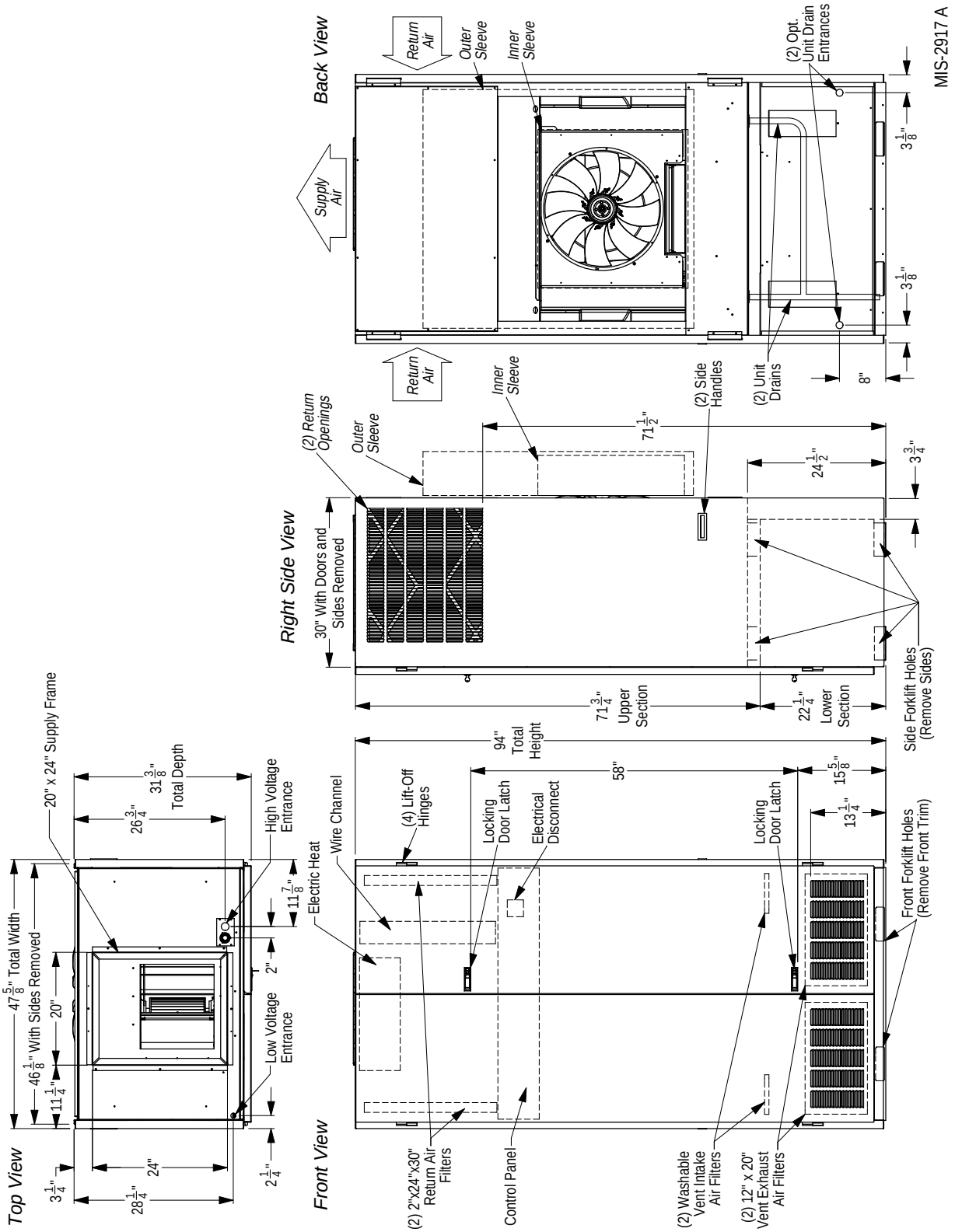

SHIPPING DAMAGE

Upon receipt of equipment, the unit should be checked for external signs of shipping damage. The skid must remain attached until the unit is ready for installation. If damage is found, the receiving party must contact the last carrier immediately, preferably in writing, requesting inspection by the carrier's agent.

UNIT REMOVAL FROM SKID

⚠ WARNING

This unit is heavy and requires more than one person to handle during installation and removal from the skid. Extreme caution must be taken to prevent injury to personnel and damage to the unit. Use appropriate safety equipment, including gloves when handling. Failure to do so may result in serious injury.

A forklift or a lift rated for the load (Figure 2A) is required to lift the unit off from the skid. This unit is top heavy and should never be tipped while moving it.

The I-TEC is designed to be lifted off the skid from the front or rear of the unit without having to remove any doors or side panels. See Figure 1 for fork openings. The shipping brackets on front and rear of the unit must be removed and discarded. The unit can now be lifted straight up and the skid can be slid out from underneath.

⚠ CAUTION

Tip unit from left side only.
Failure to do so may result in injury due to unit top-heaviness or compressor damage!

FIGURE 2A – Unit on Lift

HANDLING UNIT AFTER REMOVAL FROM SKID

If a wide and tall enough opening exists, the I-TEC can be moved as a complete assembled unit. If not, it is designed to break down into two sections to allow it to pass through a 36" wide door.

1. Depress and release both top and bottom door latches and open doors.
2. Remove the doors by lifting straight up and off from the hinge pins.
3. Remove cabinet sides by first removing the four (4) sheet metal screws from the front (leading edge) of the side panel. The panel will not fall off. Swing the panel away from the chassis 20-30° and then pull forward from the two (2) tabs supporting the rear edge.
4. On each side of the unit is a tie plate that secures the top and bottom sections with four (4) cap bolts. Using a ½" wrench or socket, remove these screws from both plates and set aside.
5. If the unit is equipped with a CRV or ERV, unplug the wire harness on the left-hand side of the control box.
6. ***A forklift or a lift rated for the load is required to lift the top section off from the bottom base. Do not attempt to do this manually. Failure to do so could result in the unit tipping over and causing bodily injury and/or damage to the unit.***
7. The top section can be forked from either the right-hand or left-hand side. See Figure 1 for fork openings.
8. Carefully lift the top section straight up avoiding tipping.

FIGURE 2B – Unit Side

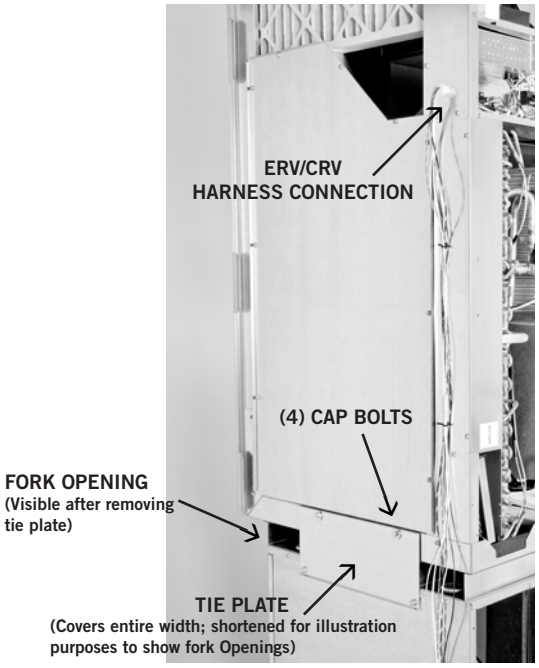

9. Move the top section through the doorway and place on flat surface free of debris.
10. The bottom base can now be moved through the doorway the same way.
11. Reassemble the unit by reversing this procedure.

REQUIRED STEPS AFTER FINAL PLACEMENT

The compressor is secured to the base with two (2) bolts for shipping. Although the unit will perform as designed with the shipping bolts in place, there may be a noticeable additional noise and vibration noted. To obtain the lowest noise and vibration levels, remove the shipping bolts after the unit is in its final operating location. To gain access to the compressor, the compressor access panel must be removed (see Figure 5 on page 14). Once this panel is removed, the CRV/ERV air duct must be removed (see Figure 5).

The air duct is removed by pulling it straight out; there are no screws securing it in place. Both the top and bottom will slide out at the same time (*pull hard*). Once removed, the compressor is visible as well as the tags on the shipping bolts (see Figure 6 on page 14).

After the compressor shipping bolts have been removed, the CRV/ERV air duct can be slid back in place and the compressor access panel re-attached.

MINIMUM INSTALLATION HEIGHT

The minimum installation height to the bottom of the roof or fixed ceiling for ducted applications is 9' 7". This provides enough clearance to install the duct work. See Figure 7A on page 15.

The IWS Series wall sleeve has a built-in vertical adjustment to fit window sill heights from 31-34". If additional height is required, two riser platform accessories are available. The IRP3 increases the unit height by 3" (Figure 7B on page 16) and the IRP6 by 6" (Figure 7C on page 17).

SECURING UNIT TO STRUCTURE

Shipped with the I-TEC unit is a wall mounting bracket (screwed to shipping skid on backside of unit). This bracket can be utilized to secure the top portion of the unit to the wall using the appropriate field-supplied hardware based upon the material you are fastening to. *(There are several offset holes, sized to accept up to a 1/4" diameter fastener that will easily allow you to hit studs on a framed wall.)* See ***BRACKET WALL SECTION VIEW*** for locating this top wall bracket which will need to be applied after the unit is located in the final position.

Additional/optional mounting holes for up to a 3/8" diameter fastener are also available in the backside of the unit. These can be accessed by:

- removing the air filters for the uppermost set
- removing the compressor section service door for the lower set

Refer to ***WOOD FRAMED INSTALLATION*** for additional framing required to secure unit to wall.

The additional/optional mounting holes will require a long extension to drive the fasteners.

Wall Mounting Bracket Location

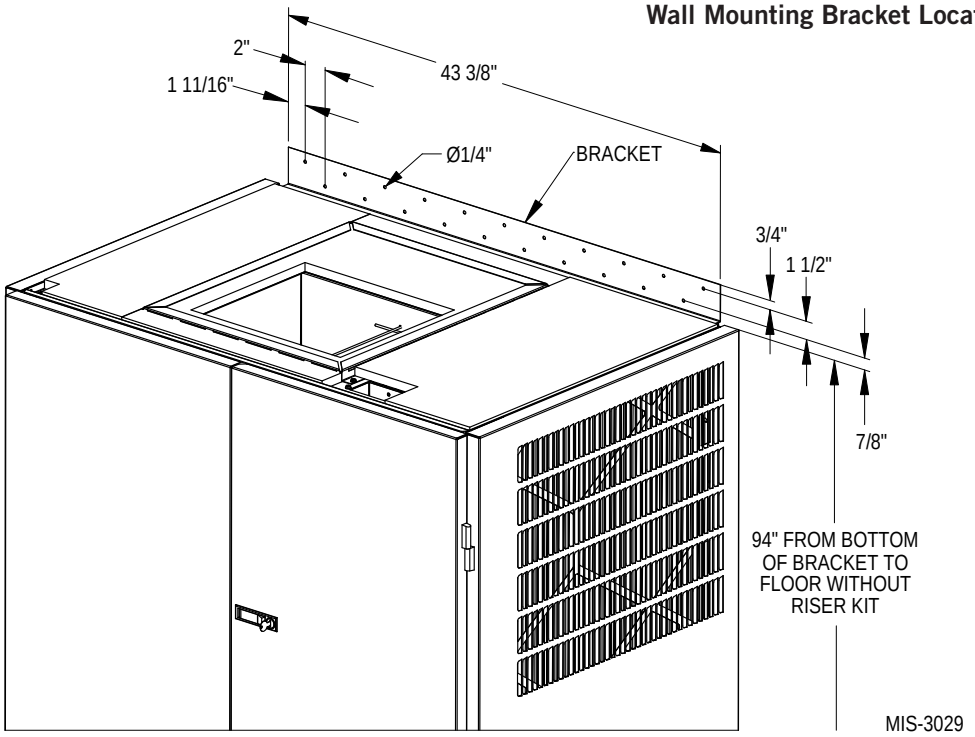

Bracket Wall Section View

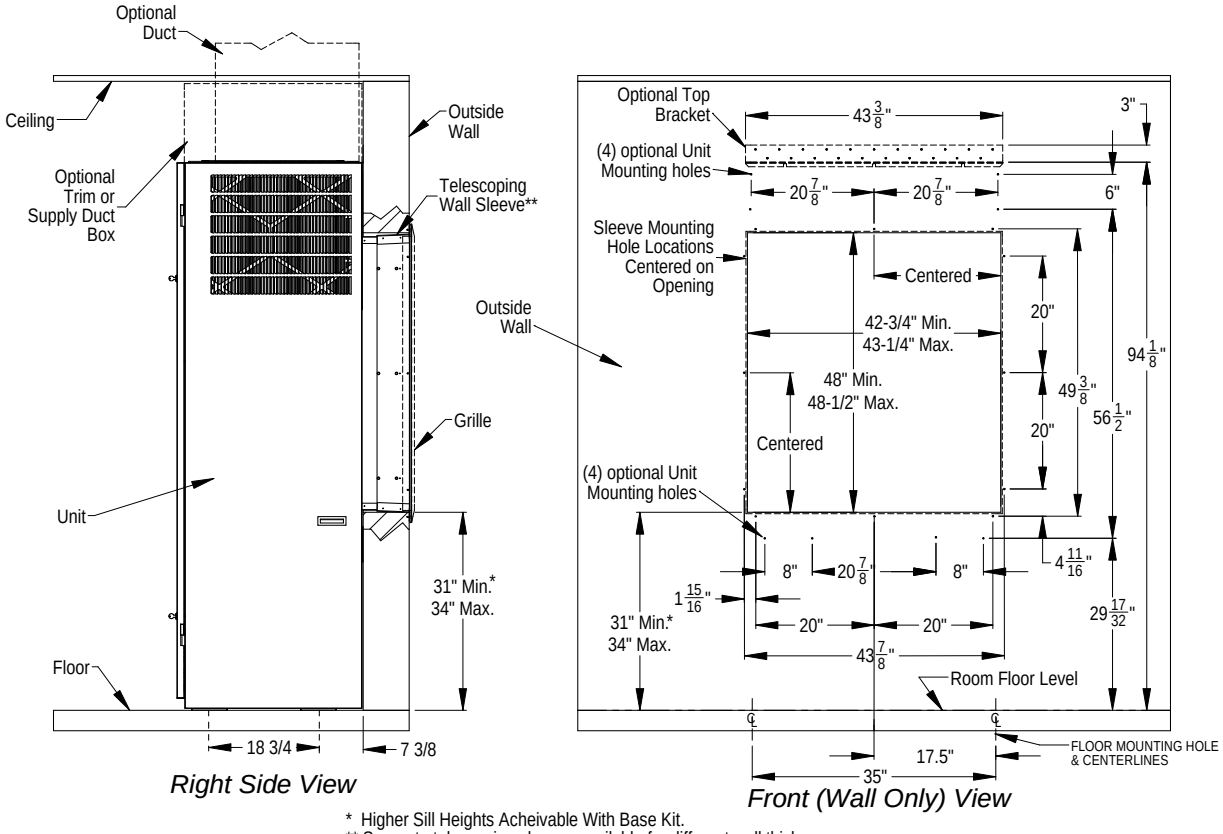

* Higher Sill Heights Acheivable With Base Kit.
** Separate telescoping sleeves available for different wall thicknesses.

MIS-2918 C

Wood Framed Installation (for Wall Attachment)

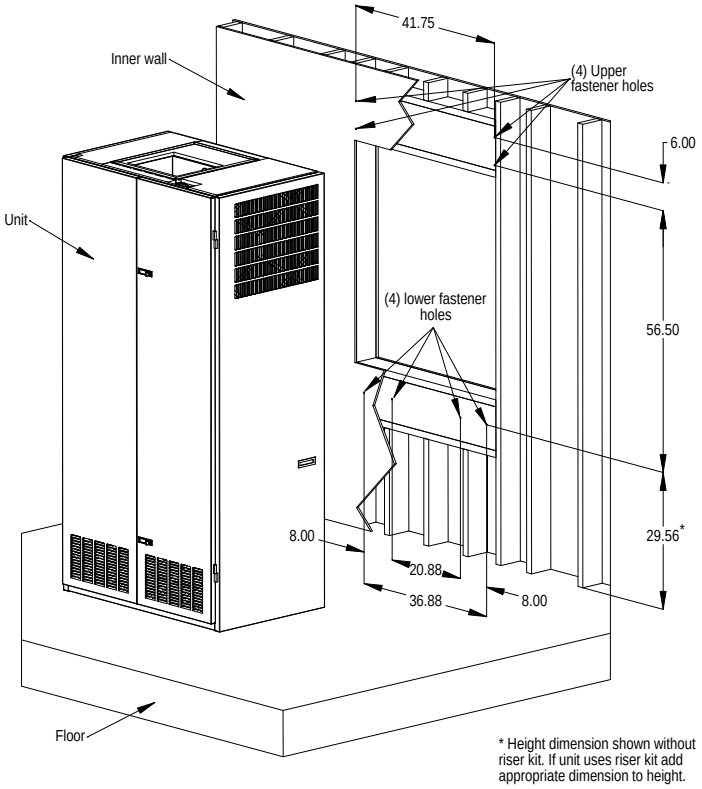

* Height dimension shown without riser kit. If unit uses riser kit add appropriate dimension to height.

MIS-3072

FIGURE 3
Center of Gravity

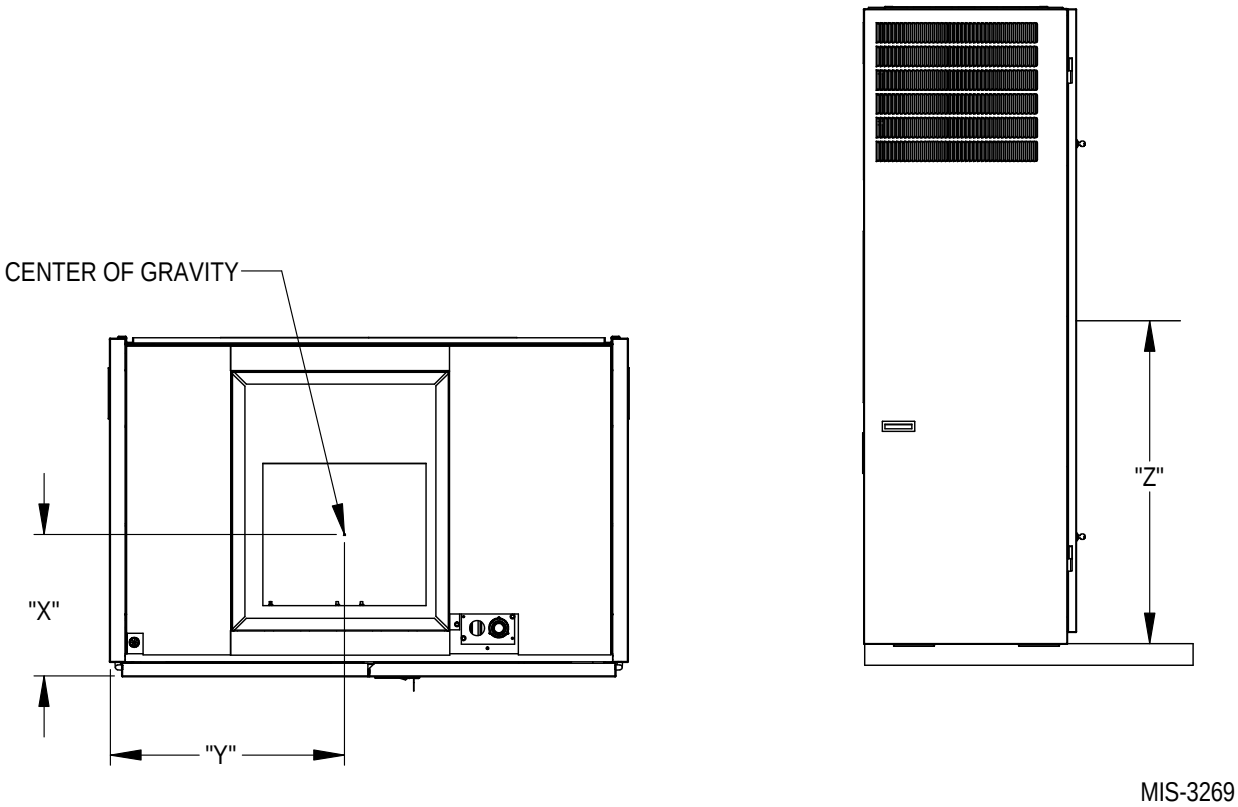

UNIT TESTED	FRONT OF UNIT DOOR TO CENTER	LEFT SIDE TO CENTER	FLOOR TO CENTER CRV & ERV	FLOOR TO CENTER NO VENT
	"X" Dimension	"Y" Dimension	"Z" Dimension	"Z" Dimension
I30A1DA, DB	13-3/4"	24"	43½"	47"
I30A1DC	13-3/4"	24¼"	43½"	47"
I36A1DA, DB	13-3/4"	24"	43½"	47"
I36A1DC	13-3/4"	24¼"	43½"	47"
I42A1DA, DB	13-3/4"	24"	43½"	47"
I42A1DC	13-3/4"	24¼"	43½"	47"
I48A1DA, DB	13-3/4"	24"	43½"	47"
I48A1DC	13-3/4"	24¼"	43½"	47"
I60A1D, DB	13-3/4"	24"	43½"	47"
I60A1DC	13-3/4"	24¼"	43½"	47"

FIGURE 4
Required Clearances and Recommended Access

WING WALL CONSTRUCTION TOP VIEW

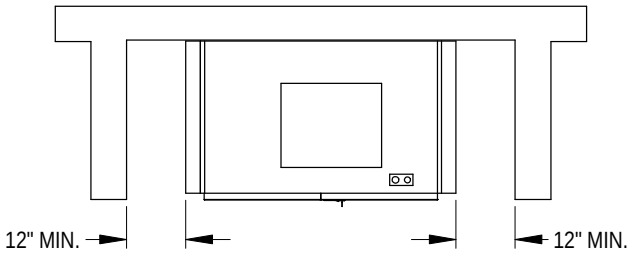

IMPORTANT

Unit can be located in corner with 0" clearance as long as other side is unobstructed

CLOSET CONSTRUCTION TOP VIEW

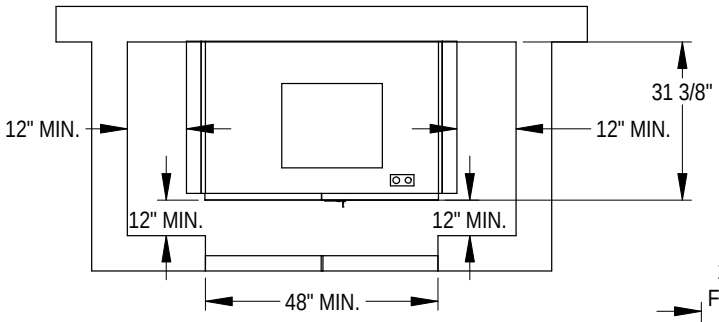

RECOMMENDED SERVICE ACCESS DIMENSIONS

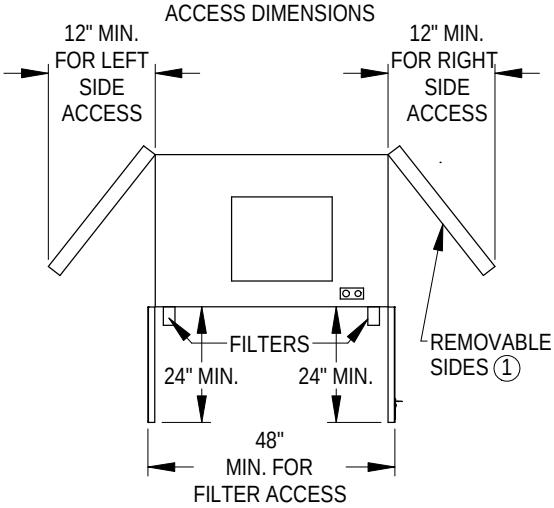

LEFT CORNER CONSTRUCTION TOP VIEW

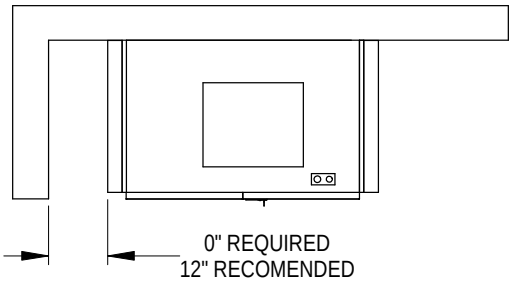

RIGHT CORNER CONSTRUCTION TOP VIEW

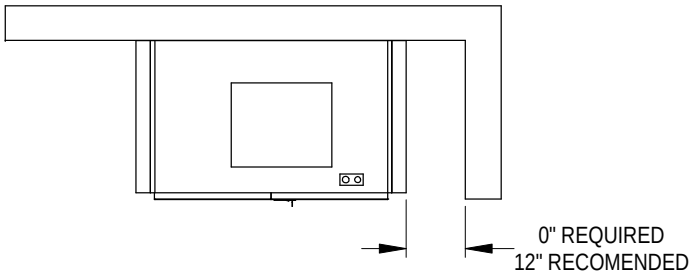

① ALL FILTER AND COMPONENT ACCESS IS FROM THE FRONT. COILS CAN BE CLEANED FROM THE FRONT, BUT SIDES ARE EASILY REMOVED FOR ENHANCED ACCESS.

MIS-3273

FIGURE 5
Removal of Air Duct

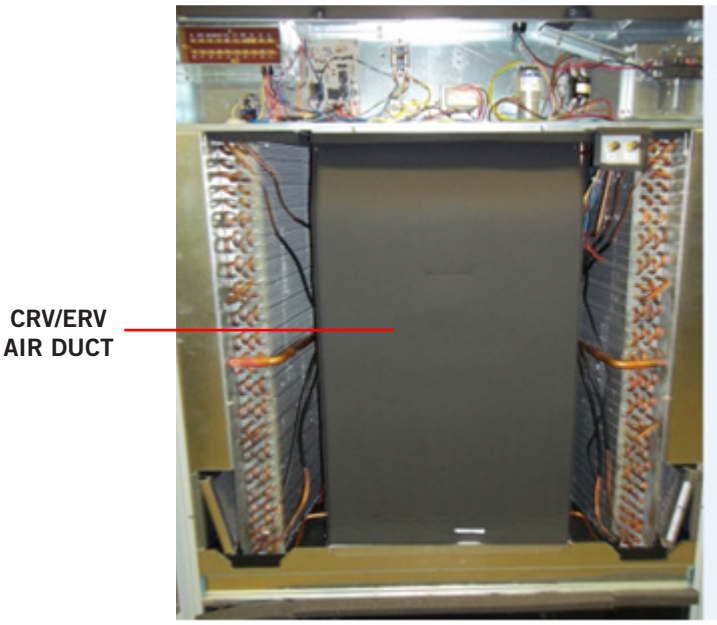

FIGURE 6
Compressor Shipping Bolts

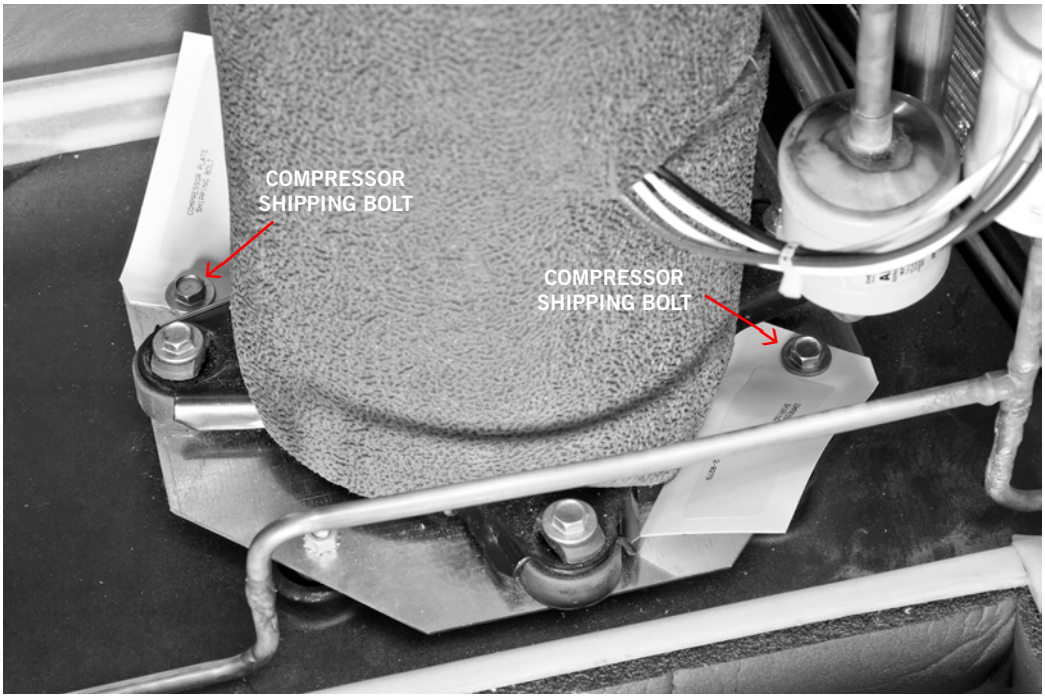

FIGURE 7A
Ducted Application – Basic Unit

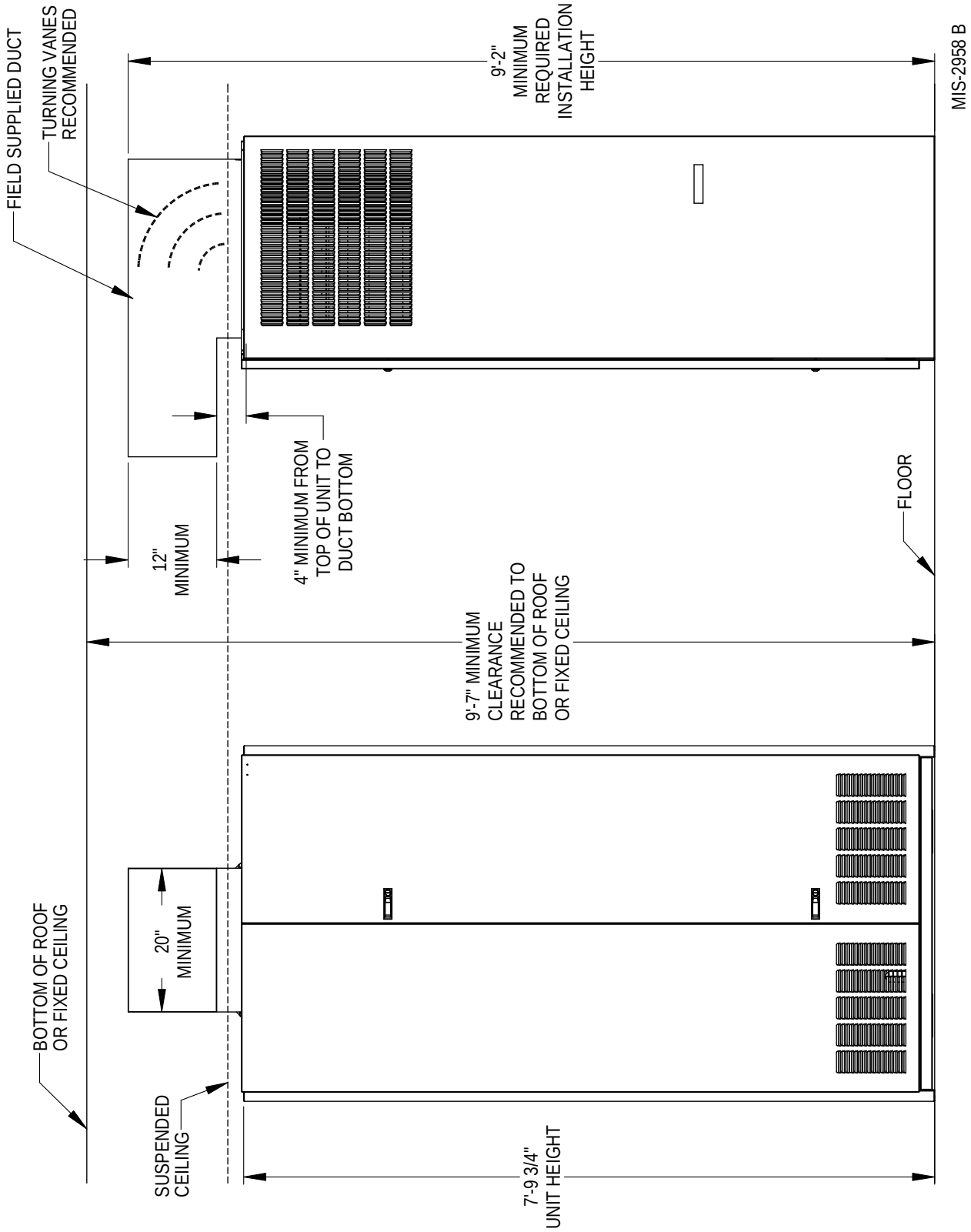

FIGURE 7B
3" Riser Application

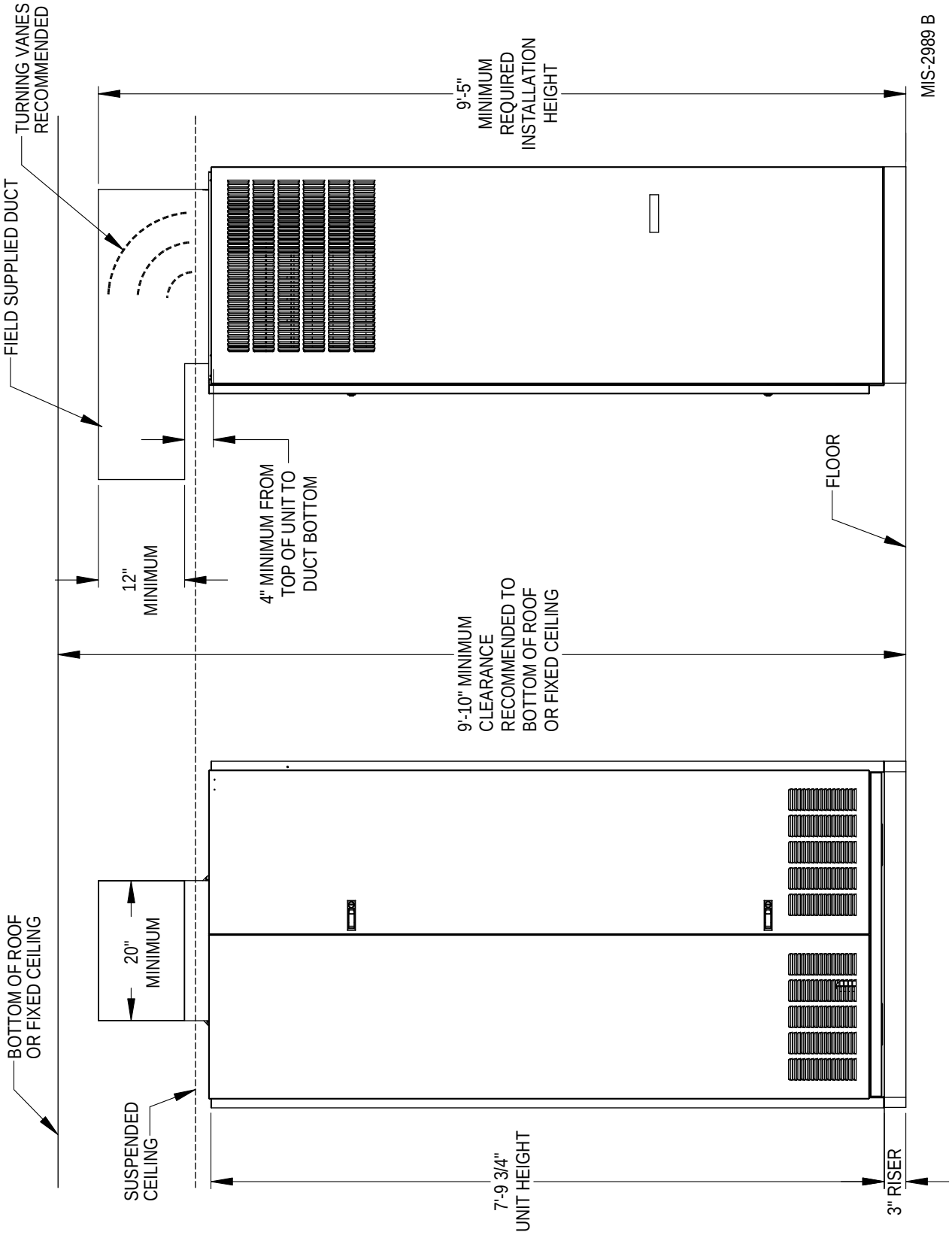

FIGURE 7C
6" Riser Application

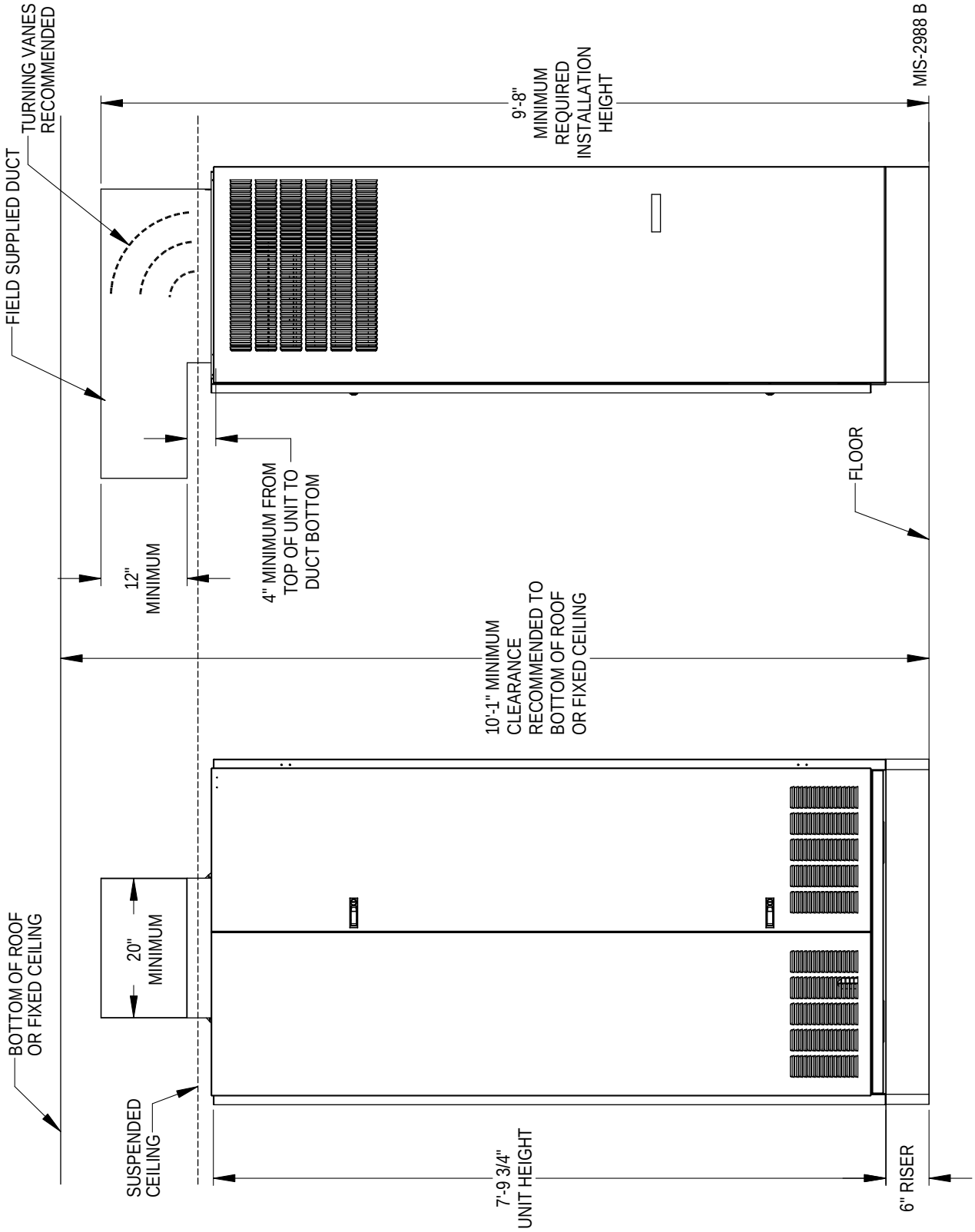

DUCT WORK

All duct work must be properly sized for the design airflow requirement of the equipment. Air Conditioning Contractors of America (ACCA) is an excellent guide to proper sizing. All duct work or portions thereof not in the conditioned space should be properly insulated in order to both conserve energy and prevent condensation or moisture damage. When duct runs through unheated spaces, it should be insulated with a minimum of 1" of insulation. Use insulation with a vapor barrier on the outside of the insulation. Flexible joints should be used to connect the duct work to the equipment in order to keep the noise transmission to a minimum.

The I-TEC Series models have provision to attach a supply air duct to the top of the unit. Duct connection size is 20" x 24". The flanges are shipped flat and must be bent upward using sheet metal flanging pliers. The duct work is field supplied. See Figure 8 for suggested attachment method.

Make sure to seal the slots in the bend-up flange at the time of securing your ductwork to the flange. This can be accomplished with either foil tape or caulk. Failing to do so may cause air leakage/whistling of air.

FIGURE 8
Supply Duct Connections

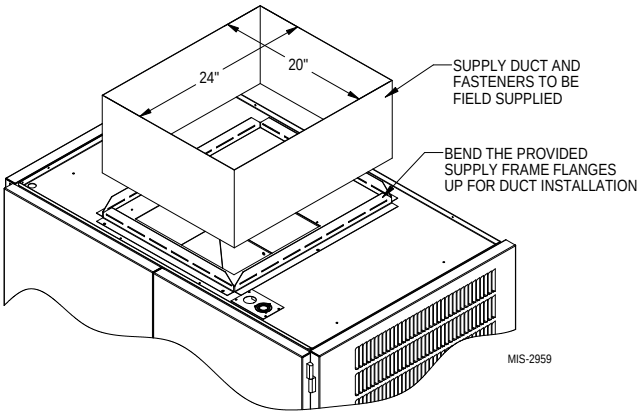

NOTE: Unit cabinet, supply air duct and duct free plenum are approved for "0" clearance to combustible material.

The I-TEC Series models are designed for use with free return (non-ducted) and either duct free with the use of IPBDF Series Plenum Box (8" or 12") or a duct supply air system.

The IPBDF Plenum Box mounts on top of the unit and has both vertically and horizontally adjustable louvers on the front discharge grille.

When used with a ducted supply, an ICX28 Cabinet Extension may be used to conceal the ductwork above the unit to the ceiling. The ICX28 extends 28" above the unit for a total height of 10'-2" for a floor mounted install (10'-5" with IRP3 riser and 10'-8" with IRP6 riser). It can be trimmed in the field for installations that require less than 10'-2".

The unit is equipped with a variable speed indoor blower motor which increases in speed with an increase in duct static pressure. The unit will therefore deliver proper rated airflow up to the maximum ESP shown in Table 1B on page 5. However, for quiet operation of the air system, the duct static should be kept as low as practical, within the guidelines of good duct design.

FILTERS

Two 2" throw away filters (24 x 30) and two 1" throw away filters (12 x 20) are supplied with each unit. The 2" filters slide into brackets on both sides for the return air openings. The 1" filters are in the cabinet doors for the vent (room air) exhaust. If a CRV or ERV vent option is used, there are two additional ½" (8 x 17) washable filters included with that option. See Figure 9 for specific locations. The filters are serviced from the inside of the building by opening the cabinet doors and do not require any tools to access.

FIGURE 9
Filter Location

CONDENSATE DRAIN

There are two condensate drain connections from the condenser drain pan (compressor area). These are visible from the rear of the unit. Factory-installed tubing connects the two drains at a tee connection and then a single drain hose with a barbed hose connector carries the condensate to the draining option chosen. Enough tubing is provided to reach all drain options and can be cut down in length.

The unit is shipped from the factory with the drain line on the left-hand side (looking at the rear of the unit). The tubing can be removed from the drain connections and flipped for a right-hand drain. See Figure 10.

The drain can be routed directly through the floor or through the wall. There are also two optional drain locations in the lower rear back panel. See Figure 10.

The I-TEC design does not require a trap in the condensate disposal tubing. Check local codes to see if a "P" trap is required.

For a stand pipe floor drain or through the wall, there is adequate hose length to reach anything located behind the unit. The lower rear portion of the cabinet is recessed approximately 4" allowing room for a "P" trap to be installed with the cabinet flush with the wall. The drain line must be able to be removed from the unit if necessary to remove the unit from the wall.

Access plates are located on the rear of the unit for servicing the drain trap (see Figure 10). ***If the drain line is to be routed through an unconditioned space, it must be protected from freezing.***

The condensate drain line can also be routed back into the unit through either the right-hand or left-hand optional drain locations on the rear of the unit. The hole is covered by insulation on the inside of the unit and will have to be cut away. Drain holes are located inside the unit in the bottom of the base about 12" in from the front on both the left and right side. These holes are covered with insulation and are not visible. They are located very close to the side panels and can be found by pressing down on the insulation. Cut insulation away to expose the hole. A drain trap can now be installed inside of the cabinet, and the drain hose routed directly through the floor.

Once the I-TEC is installed, the rear drains exiting the condenser section can be easily serviced with removal of the pre-painted metal sides (lift-off doors, remove four (4) screws to remove side).

If side access is not available, the drain lines and trap can be serviced by removing either one of the drain access panels on the rear of the unit (in the ventilation package area.) See Figure 10.

WITH NO VENT OPTION

To access the drain access panels in the rear of this section, remove the front door/cover from the box, and the plates are located in the rear of the box.

WITH COMMERCIAL ROOM VENTILATOR

1. Open hinged front doors.
2. Disconnect unit power to eliminate shock hazard.
3. Remove front cover/door of CRV vent package. (Can leave filter access panels in place.)
4. Unplug wires coming in on left side from upper unit section.
5. Unplug two wire harness from front (intake) blower.
6. Remove two (2) screws securing front (intake) blower and slide blower out of unit.
7. Remove four (4) screws that retain the partition behind/beneath intake blower removed in Step 6.
8. Rear drain access panels are now visible on both right-hand and left-hand sides in rear of box.

WITH ENERGY RECOVERY VENTILATOR

To access the rear drain access panels of this section:

1. Open hinged front doors.
2. Disconnect unit power to eliminate shock hazard.
3. Remove front cover/door of ERV vent package. (Can leave filter access panels in place.)
4. Unplug wires coming in on left side from upper unit section.
5. Unplug heat recovery cassette on the side you wish to access, and slide cassette out the front of the unit.
6. Remove two (2) screws securing partition on outboard side of cassette and remove.
7. Rear drain access panels are now visible on both right-hand and left-hand sides in rear of box.

FIGURE 10 – Drain Locations

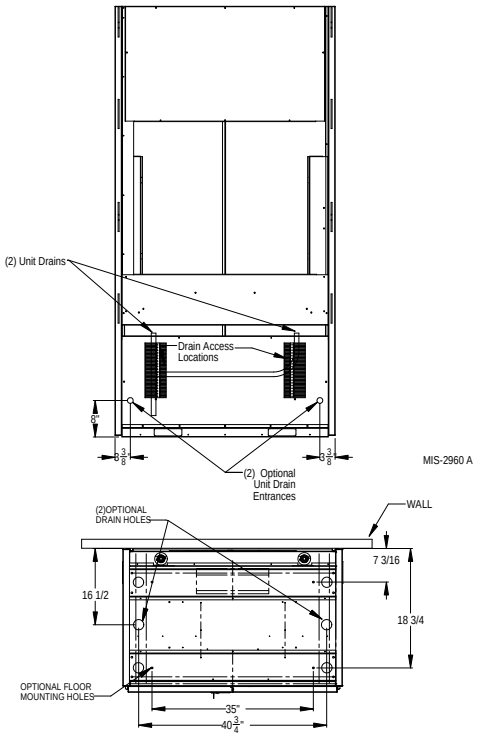

FIGURE 11A
Unit Mounting

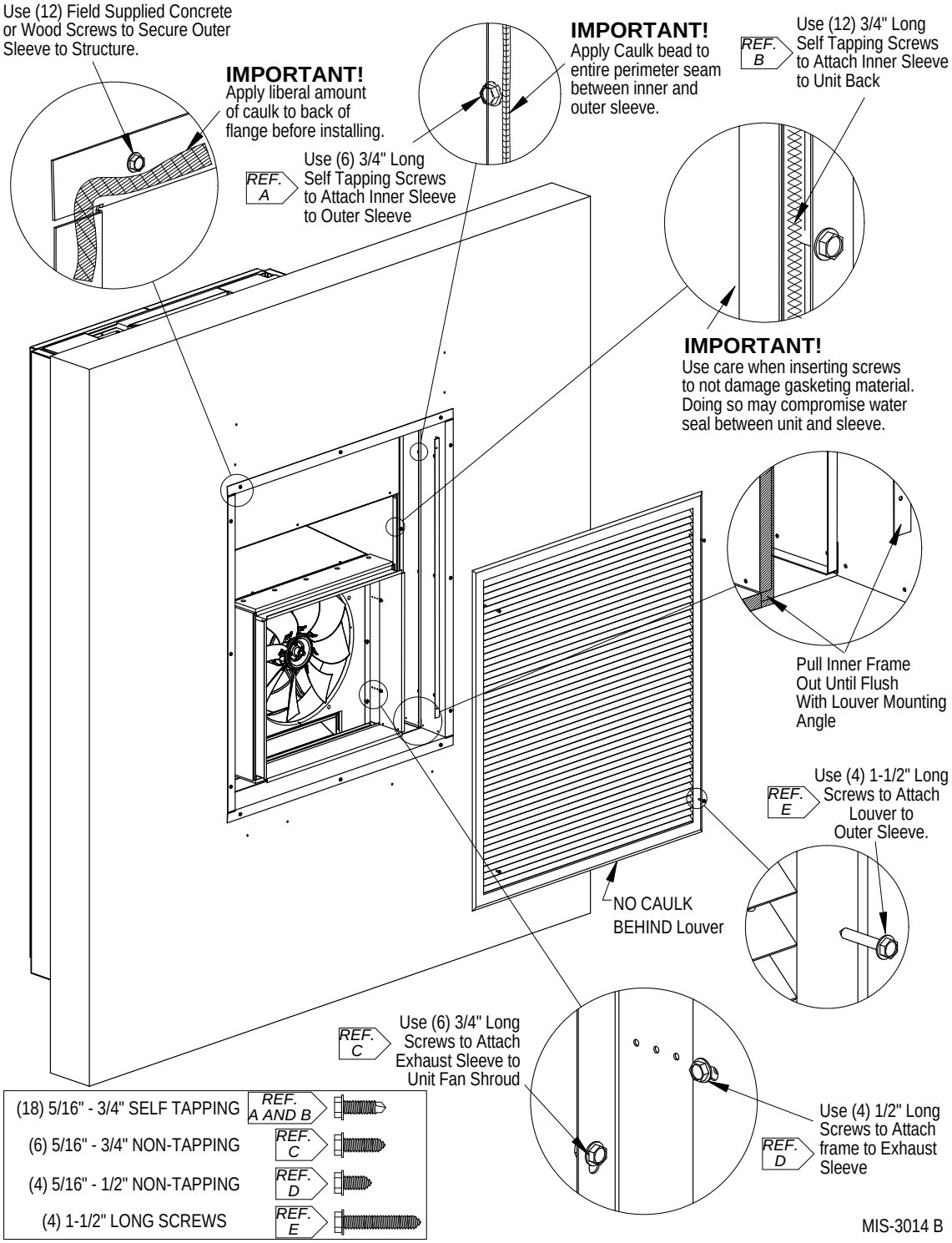

FIGURE 11B
Unit Mounting

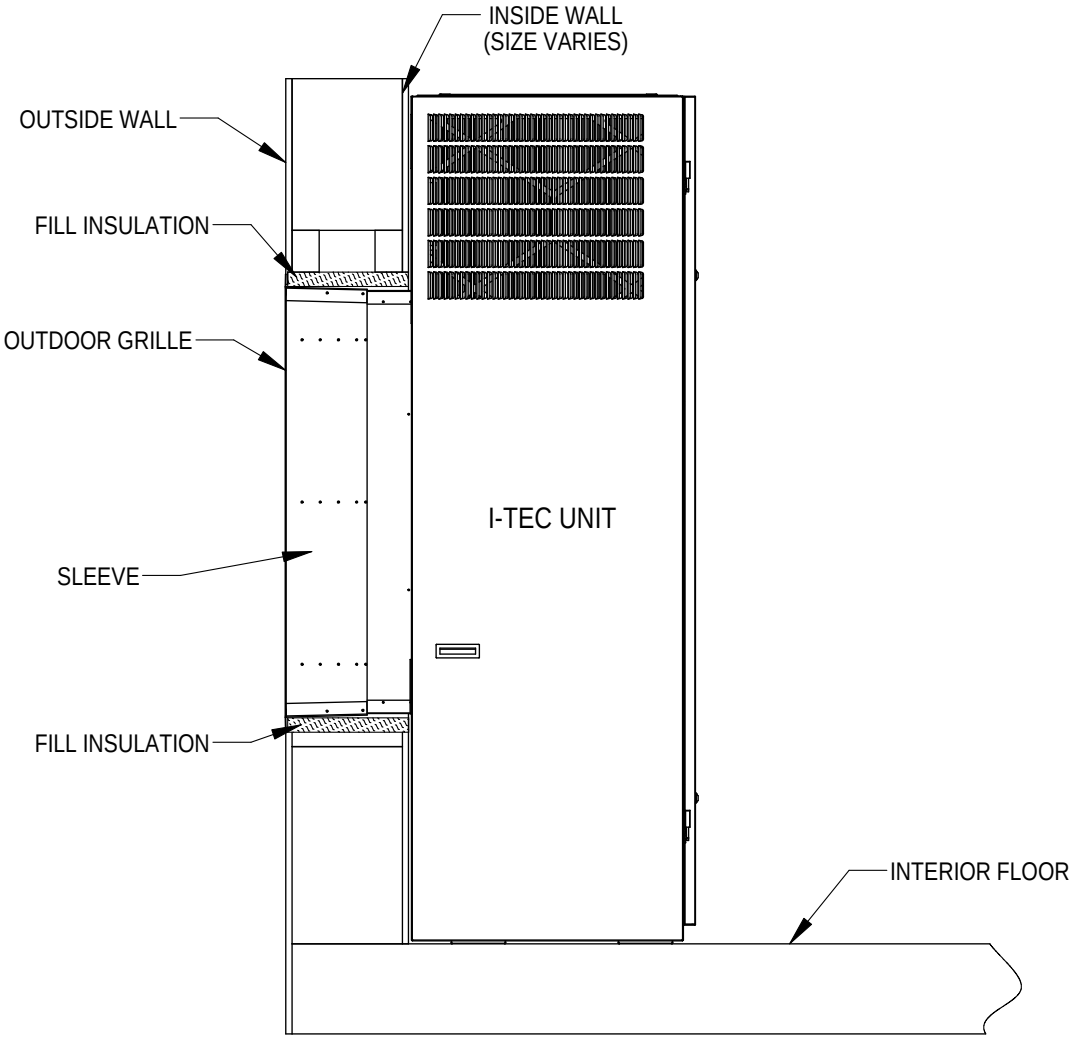

MIS-2928 A

MOUNTING THE UNIT

The wall sleeve is attached to the I-TEC unit from the outside of the building. See Figures 11A and 11B. Refer to wall sleeve Manual 2100-562 supplied with sleeve.

Following are the steps for attaching the I-TEC to the wall sleeve.

1. Lift the unit into place making sure that it is aligned side to side.
2. Push the unit back until the rear panel touches the sleeve gasket.
3. This unit must be level from side to side and from front to back. If adjustments are necessary, shim up under the base rails with sheets of metal or any substance not affected by moisture.
4. Attach the sleeve to the unit using the ten (10) ¾" long self-tapping screws supplied with the sleeve.
5. The exhaust sleeve has three (3) ¾" long screw slots in each side flange. Line these up with the screw engagement holes in the fan panel. Attach using six (6) ¾" long pointed sheet metal screws supplied with the sleeve. Extend the sleeve out until it is flush with the louver grill attachment angles.
6. Lock the sleeve in place using two (2) ½" long pointed sheet metal screws on each side by shooting through the slot into a pre-punched hole.
7. A bottom trim piece is shipped loose for installation beneath the doors. Attach the trim piece to the unit with screws provided.
8. The compressor is secured to the base with two (2) bolts for shipping. Both bolts are identified with a tag. Remove shipping bolts (see Figure 5 on page 13).

WIRING – MAIN POWER

Refer to the unit rating plate and/or Table 2 on page 6 for wire sizing information and maximum fuse or circuit breaker size. Each unit is marked with a "Minimum Circuit Ampacity". This means that the field wiring used must be sized to carry that amount of current. Depending on the installed KW of electric heat, there may be two field power circuits required. If this is the case, the unit serial plate will so indicate. All models are suitable only for connection with copper wire. Each unit and/or wiring diagram will be marked "Use Copper Conductors Only suitable for at least 75°C". ***THESE INSTRUCTIONS MUST BE ADHERED TO.*** Refer to the National Electrical Code (NEC) for complete current carrying capacity data on the various insulation grades of wiring material. All wiring must conform to NEC and all local codes.

The electrical data lists fuse and wire sizes (75°C copper) for all models, including the most commonly used heater sizes. Also shown are the number of field power circuits required for the various models with heaters.

The unit rating plate lists a "Maximum Time Delay Relay Fuse" or circuit breaker that is to be used with the equipment. The correct size must be used for proper circuit protection, and also to assure that there will be no nuisance tripping due to the momentary high starting current of the compressor motor.

See **"START UP"** section for information on three phase scroll compressor start-ups.

The field wiring conduit connections are located on the top right-hand corner of the unit with a wire raceway to feed the wires down to the circuit breaker(s). See Figure 12.

FIGURE 12
Component Location

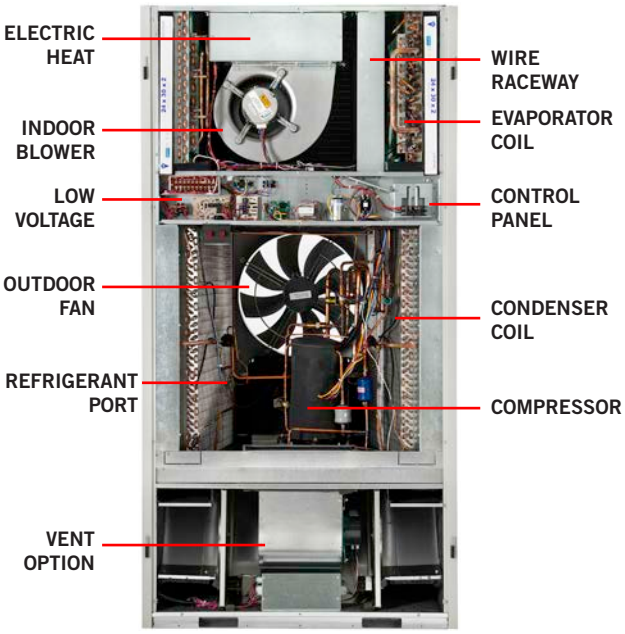

WIRING – LOW VOLTAGE WIRING

230/208V, 1 PHASE AND 3 PHASE EQUIPMENT DUAL PRIMARY VOLTAGE TRANSFORMERS

All equipment leaves the factory wired on 240V tap. For 208V operation, reconnect from 240V to 208V tap. The acceptable operating voltage range for the 240 and 208V taps are as noted in Table 3.

TABLE 3 – Operating Voltage Range

TAP	RANGE
240V	253 – 216
208V	220 – 187

NOTE: *The voltage should be measured at the field power connection point in the unit and while the unit is operating at full load (maximum amperage operating condition).*

The standard unit includes a remote thermostat connection terminal strip. See Figures 13-19 on pages 24 through 30 for connection diagrams. Compatible thermostats are listed in Table 4.

TABLE 4 – Wall Thermostats

Thermostat	Predominant Features
8403-060 (1120-445)	3 Stage Cool; 3 Stage Heat Programmable/Non-Programmable Electronic HP or Conventional Auto or Manual changeover
8403-096 (CDT-2W40-LCD-RLY)	Carbon Dioxide Sensor with LCD for Sensor Readings
8403-081 (VT8650U5500B)	2 stage Cool; 2 stage Heat Programmable/Non-Programmable Electronic HP or Conventional, Auto or Manual changeover with Humidity and Occupancy Sensor, BACnet
CS9B-THOA	3 Stage Heat, 3 Stage Cool, Prog/NonProg, HP or Conv, Auto or Manual Changeover, Humidity Sensor w/dehumidification, Motion Sensor w/Intelligent Learning Control, BACnet-compatible
CS9B-THOCA	3 Stage Heat, 3 Stage Cool, Prog/NonProg, HP or Conv, Auto or Manual Changeover, Humidity Sensor w/dehumidification, CO_2 Sensor, Motion Sensor w/Intelligent Learning Control, BACnet-compatible
CS9BE-THOA	3 Stage Heat, 3 Stage Cool, Prog/NonProg, HP or Conv, Auto or Manual Changeover, Humidity Sensor w/dehumidification, Motion Sensor, Intelligent Learning Control, BACnet-compatible, Ethernet-compatible
CS9BE-THOCA	3 Stage Heat, 3 Stage Cool, Prog/NonProg, HP or Conv, Auto or Manual Changeover, Humidity Sensor w/ dehumidification, CO_2 Sensor, Motion Sensor w/Intelligent Learning Control, BACnet-compatible, Ethernet-compatible

LOW VOLTAGE CONNECTIONS

These units use a grounded 24 volt AC low voltage circuit.

"G" terminal is the *fan input*.

"Y1" terminal is the *compressor part load input*.

"Y2" terminal is the *compressor full load input*.

"R" terminal is *24 VAC hot*.

"C" terminal is *24 VAC grounded.*

"L" terminal is *compressor lockout* **output.** This terminal is activated on a high or low pressure trip and condensate or evaporator overflow trip. This is a 24 VAC output.

"W2" terminal is *first stage electric heat* (if equipped). First stage electric heat can be operated simultaneously with the heat pump operating.

"A" terminal is the *ventilation input*. This terminal energizes any factory installed ventilation option.

"W3" terminal is *second stage electric heat*. When "W3" terminal is energized, it locks out compressor operation to limit discharge air temperature and required branch circuit ampacity.

"D" terminal is the *dehumidification mode* (on models so equipped).

NOTE: *For total and proper control using DDC, a minimum of nine controlled outputs are needed when above 10KW electric heat is employed with ventilation, a total of eight controlled outputs with below 10KW electric heat with ventilation, seven controlled outputs below 10KW electric heat with no ventilation, seven controlled outputs with no electric heat but with ventilation, and six controlled outputs with no electric heat and no ventilation. If dehumidification model and vent, ten controlled outputs are needed when above 10KW electric heat is employed with ventilation.*

LOW VOLTAGE CONNECTIONS FOR DDC CONTROL	
Fan Only	Energize G
Cooling Part Load	Energize G, Y1
Cooling Full Load	Energize G, Y1, Y2
Heating with Bank #1 Electric Heat Only	Energize G, W2
Emergency Heat	Energize G, W2, W3
Ventilation	Energize A
Dehumidification	Energize G, D

GENERAL

This unit is equipped with a variable speed ECM motor. The motor is designed to maintain rated airflow up to the maximum static allowed. ***It is important that the blower motor plugs are not plugged in or unplugged while the power is on. Failure to remove power prior to unplugging or plugging in the motor could result in motor failure.***

⚠ CAUTION

Do not plug in or unplug blower motor connectors while the power is on. Failure to do so may result in motor failure.

FIGURE 13
Basic Air Conditioner with No Ventilation Package ("B" Vent Code)

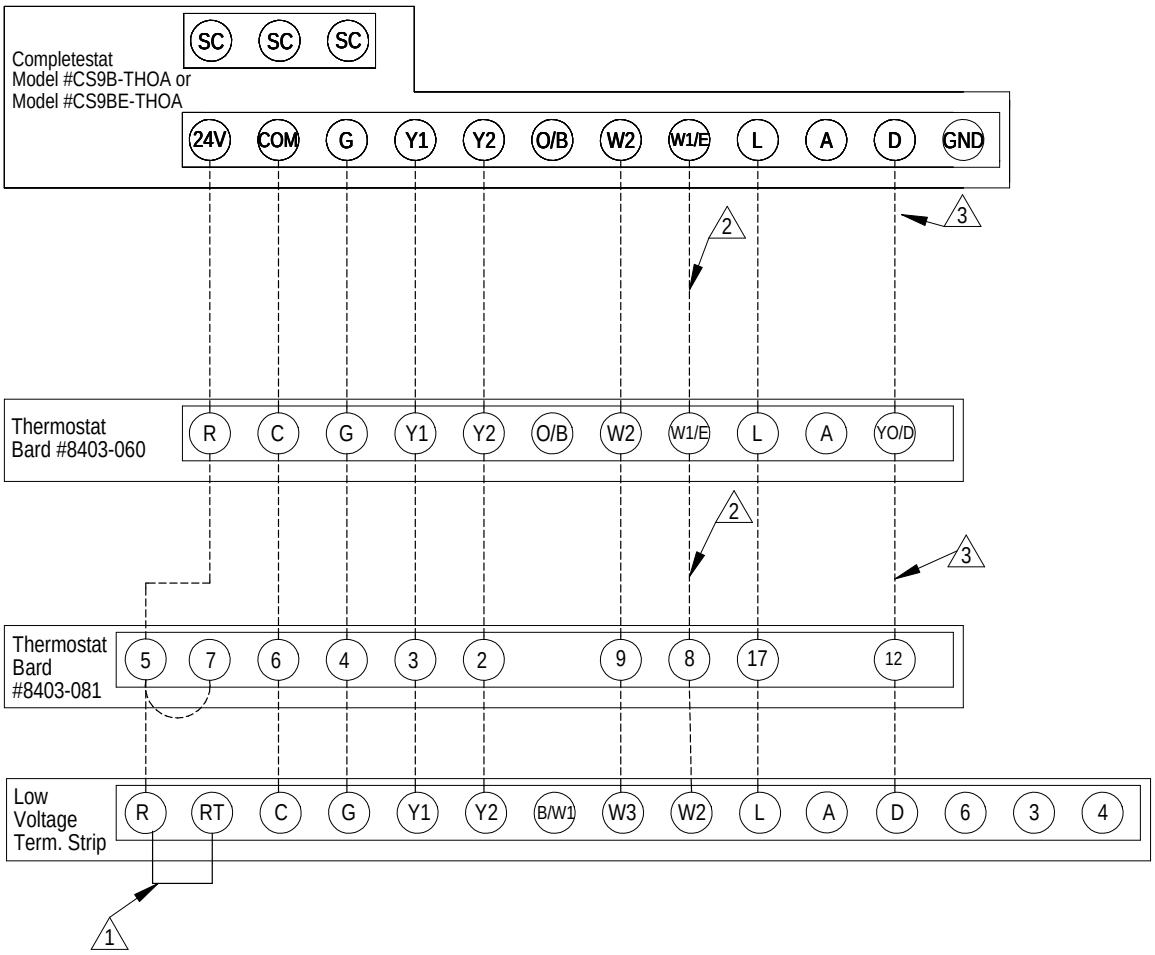

1 Factory installed jumper. Remove jumper and connect to N.C fire alarm

2 Not needed below 15KW

3 Additional wire required for dehumidification models

4 Relay Provided with Completestat

MIS-3257 D

FIGURE 14
Air Conditioner with CRV, without CO_2 Control ("M" Vent Code)

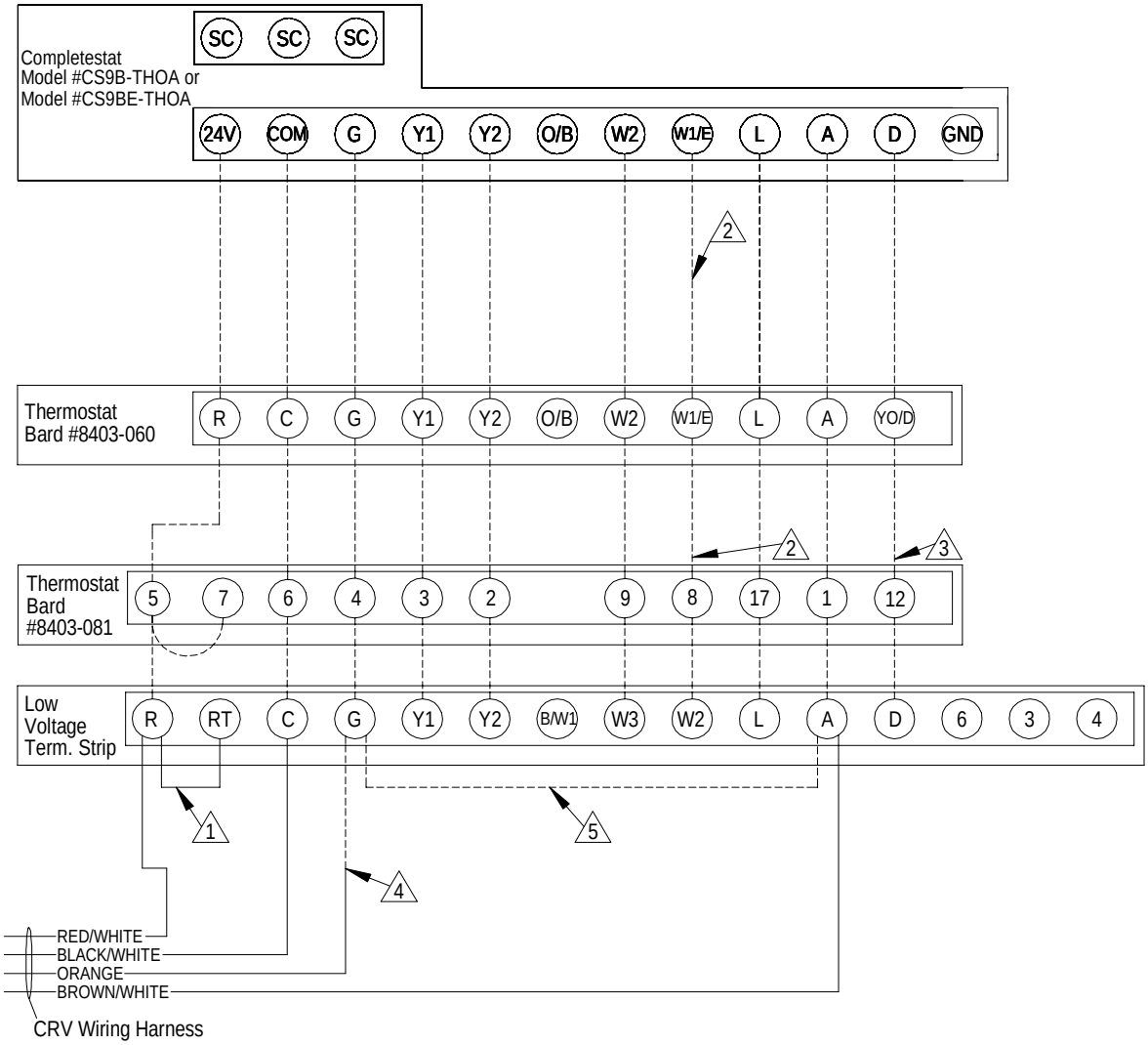

1. Factory installed jumper. Remove jumper and connect to N.C fire alarm circuit if emergency shutdown required.
2. Not needed below 15KW.
3. Additional wire required for dehumidification models.
4. Connect to "G" terminal when thermostat has "Occupancy Signal".
5. Install a jumper between "G" and "A" only when thermostat without "Occupancy Signal" is used.

MIS-3258 D

FIGURE 15
Air Conditioner with CRV and CO_2 Control ("M" Vent Code)

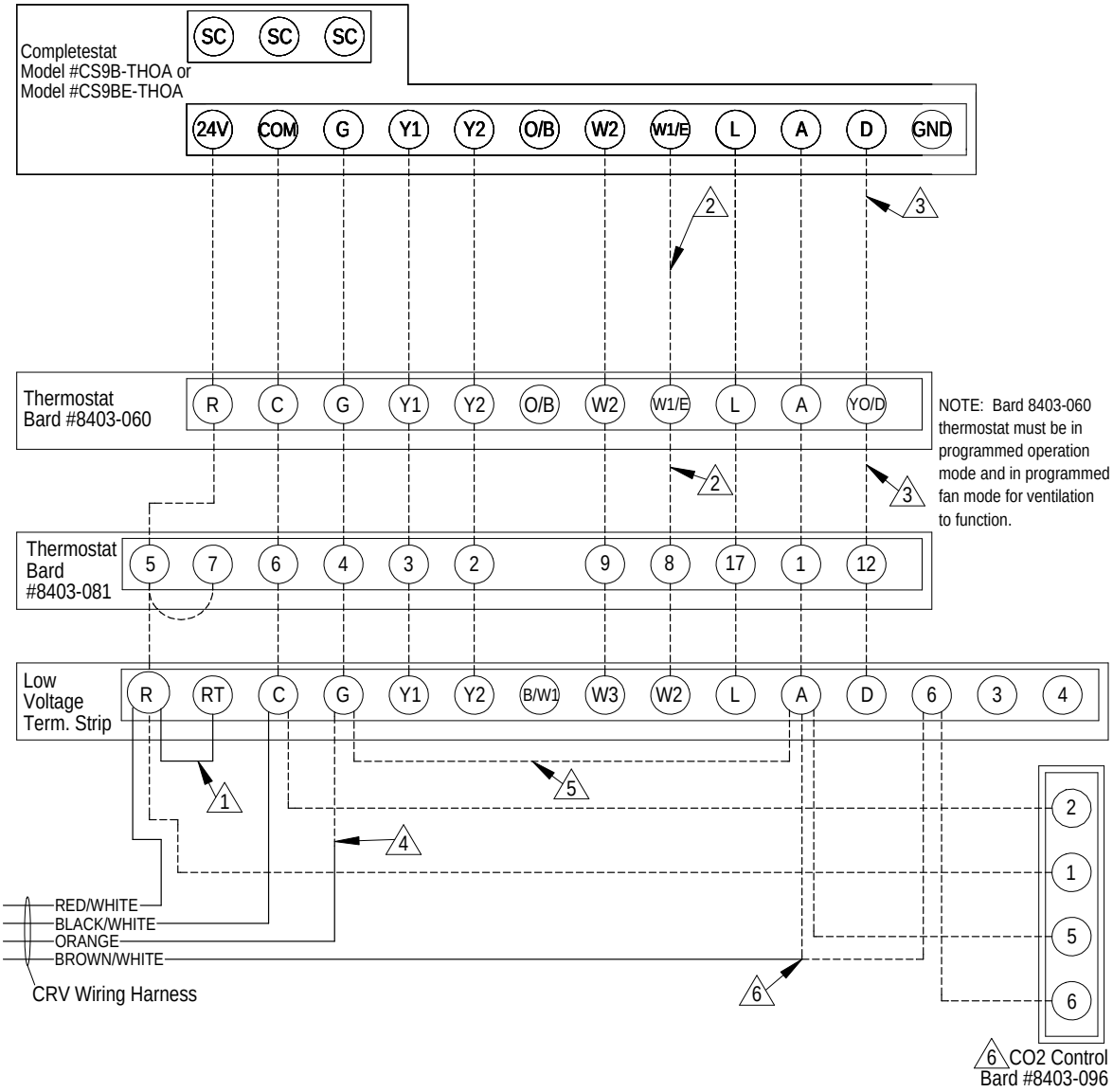

1. Factory installed jumper. Remove jumper and connect to N.C fire alarm circuit if emergency shutdown required.
2. Not needed below 15KW.
3. Additional wire required for dehumidification models.
4. Connect to "G" terminal when thermostat has "Occupancy Signal".
5. Install a jumper between "G" and "A" only when thermostat without "Occupancy Signal" is used.
6. If CS9B-THOC or CS9BE-THOC is used, connect "Brown/White" directly to "A" and do not use seperate CO2 controller.

MIS-3259 E

FIGURE 16
Air Conditioner with ERV, without CO_2 Control ("R" Vent Code)

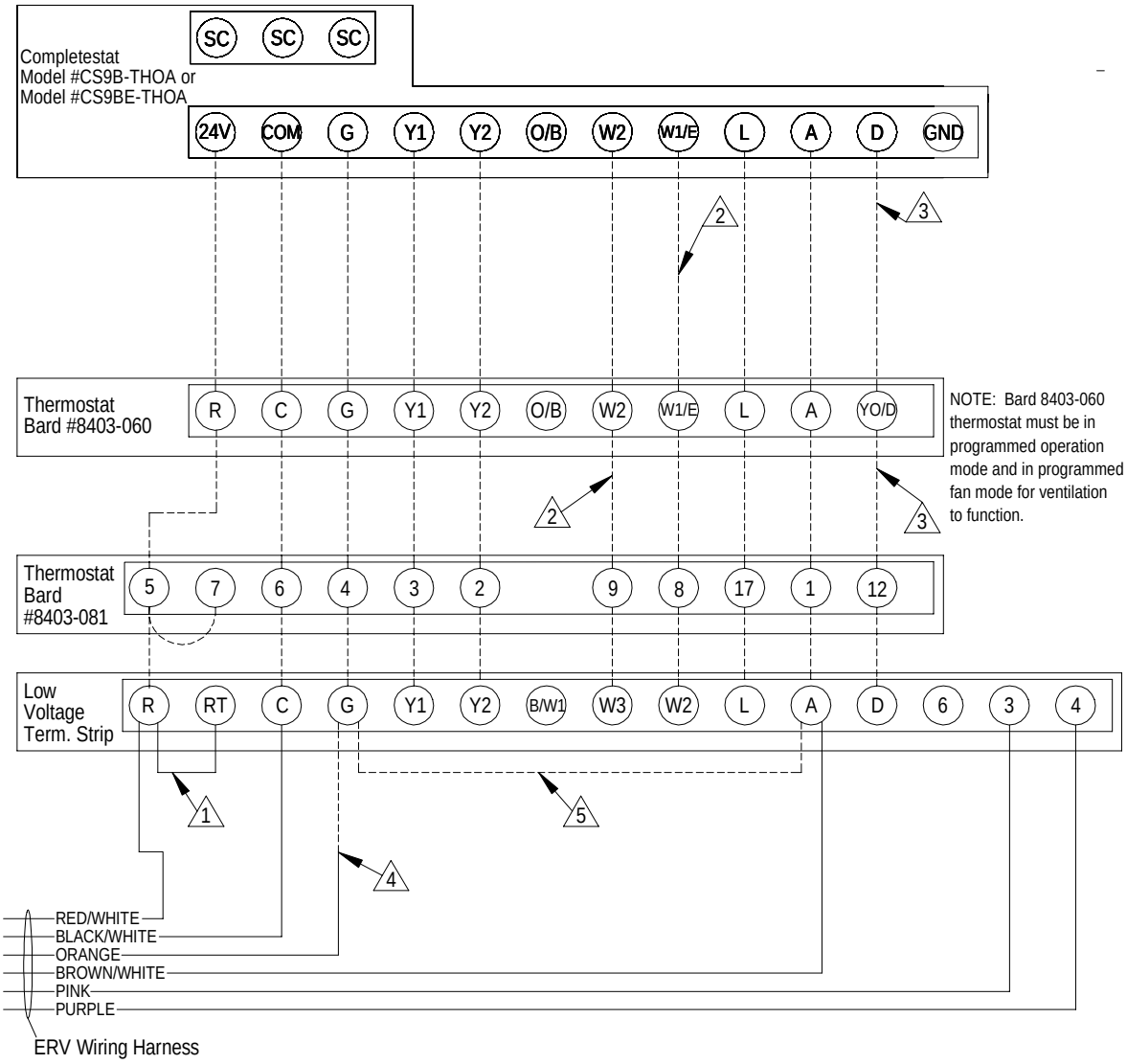

1. Factory installed jumper. Remove jumper and connect to N.C fire alarm circuit if emergency shutdown required.
2. Not needed below 15KW.
3. Additional wire required for dehumidification models.
4. Connect to "G" terminal when thermostat has "Occupancy Signal".
5. Install a jumper between "G" and "A" only when thermostat without "Occupancy Signal" is used.

MIS-3260 E

FIGURE 17
Air Conditioner with ERV and CO_2 Control (On/Off Cycling) ("R" Vent Code)

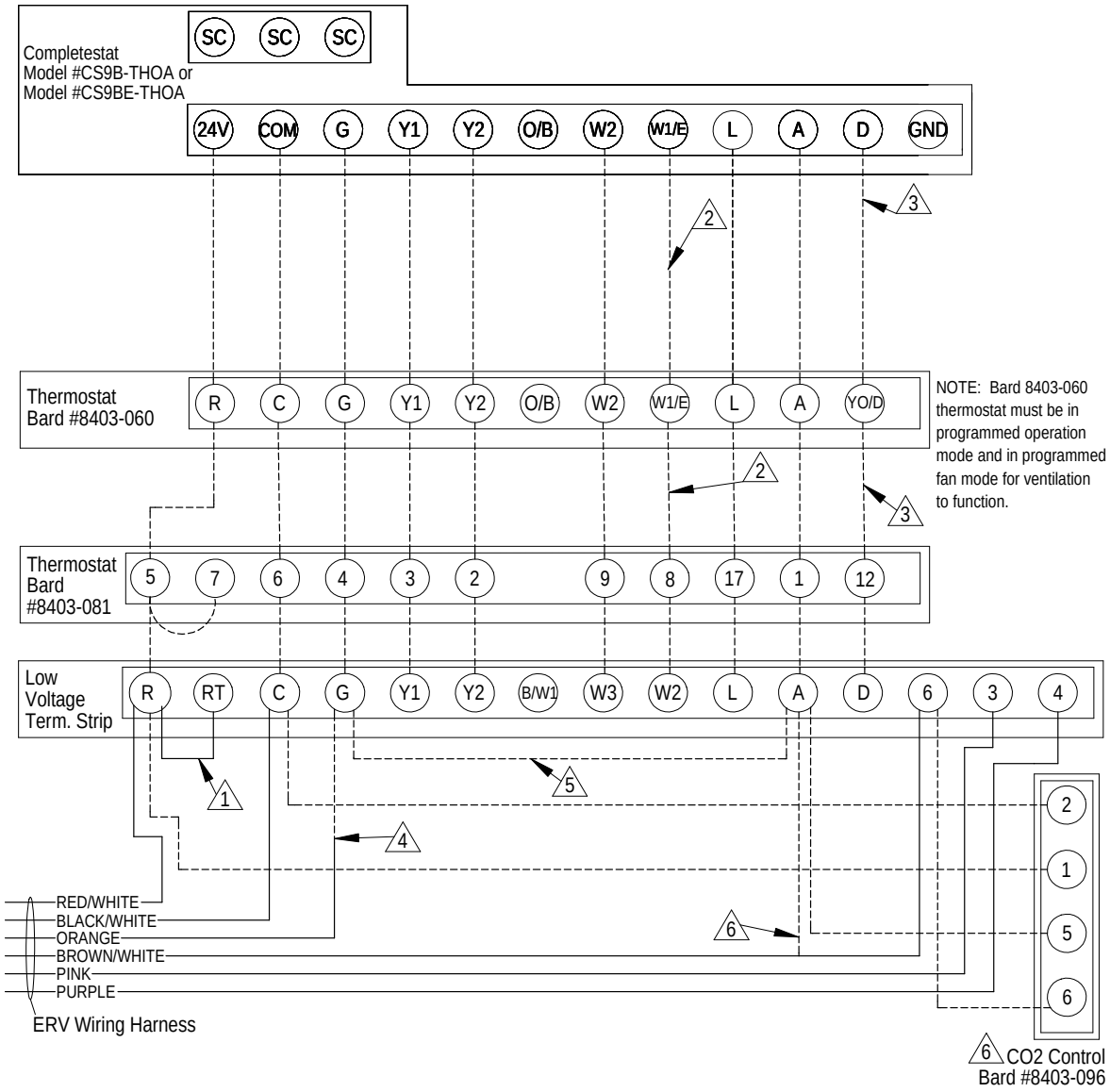

1. Factory installed jumper. Remove jumper and connect to N.C fire alarm circuit if emergency shutdown required.
2. Not needed below 15KW.
3. Additional wire required for dehumidification models.
4. Connect to "G" terminal when thermostat has "Occupancy Signal".
5. Install a jumper between "G" and "A" only when thermostat without "Occupancy Signal" is used.
6. If CS9B-THOC or CS9BE-THOC is used, connect "Brown/White" directly to "A" and do not use seperate CO2 controller.

MIS-3261 E

FIGURE 18
Air Conditioner with ERV and CO_2 Control (Fully Modulating) ("R" Vent Code)

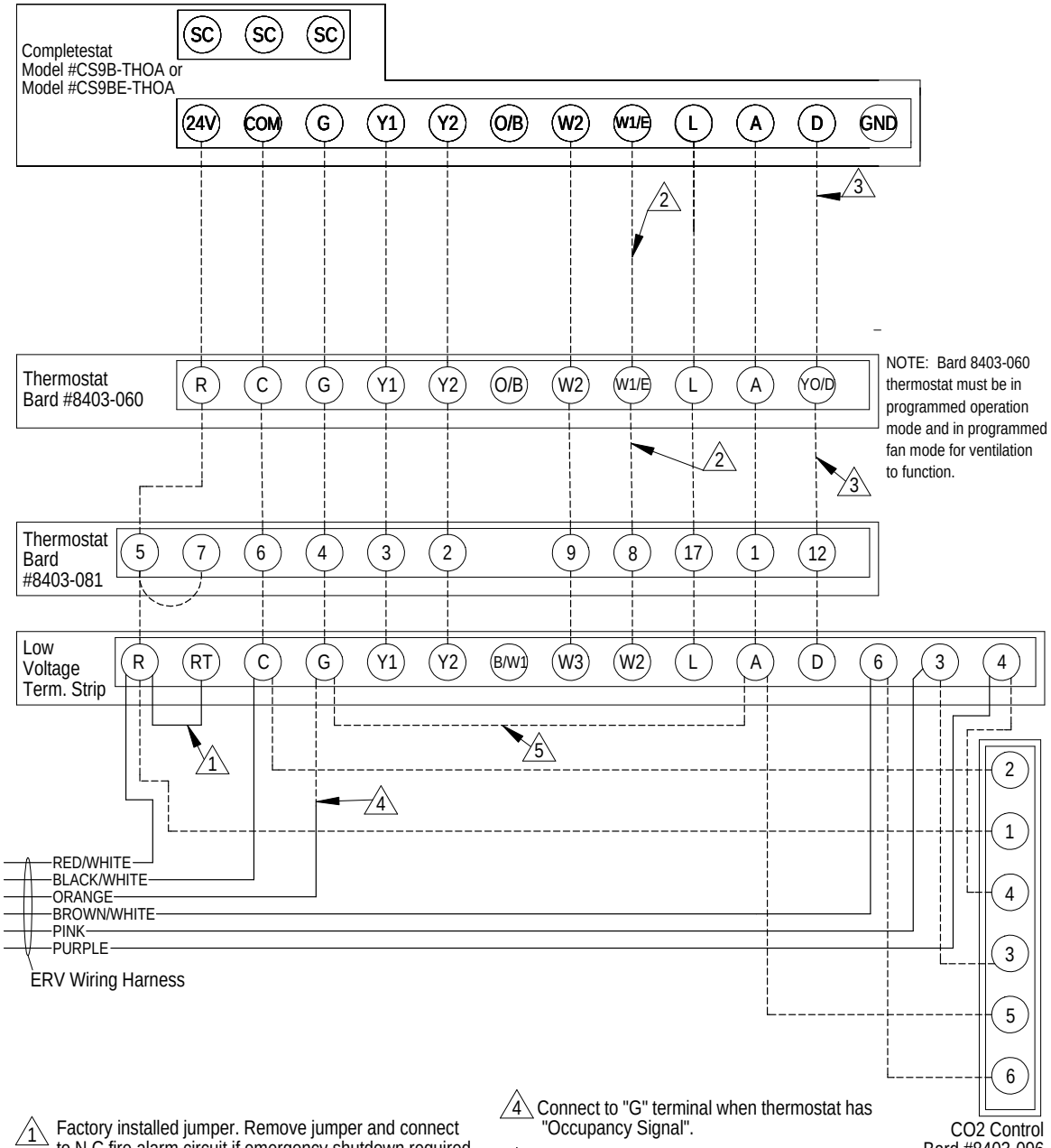

1 Factory installed jumper. Remove jumper and connect to N.C fire alarm circuit if emergency shutdown required.

2 Not needed below 15KW.

3 Additional wire required for dehumidification models.

4 Connect to "G" terminal when thermostat has "Occupancy Signal".

5 Install a jumper between "G" and "A" only when thermostat without "Occupancy Signal" is used.

MIS-3262 E

FIGURE 19
Air Conditioner with Combination CRV and DB Economizer ("N" Vent Code)
Only Recommend Bard CS9B-THOC or CS9BE-THOC as Require 3 Heating/Cooling Stages

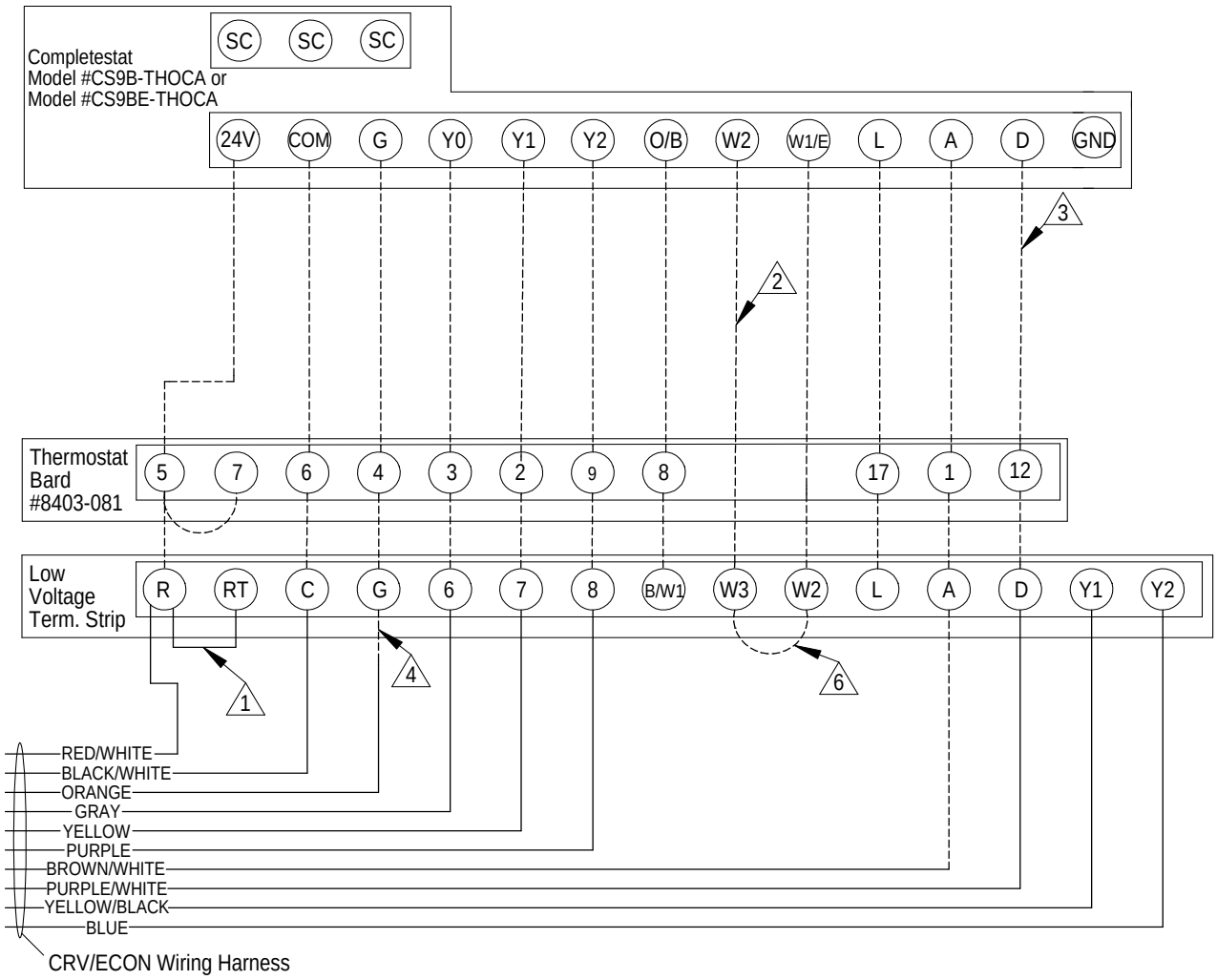

1. Factory installed jumper. Remove jumper and connect to N.C fire alarm circuit if emergency shutdown required.
2. Not needed below 15KW.
3. Additional wire required for dehumidification models.
4. Connect orange wire to "G" terminal
6. Jumper W2 to W3 on terminal strip if unit has 15 KW of heat when using the 8301-081 thermostat.

MIS-3270 D

THESE UNITS REQUIRE R-410A REFRIGERANT AND POLYOL ESTER OIL.

GENERAL

1. Use separate service equipment to avoid cross contamination of oil and refrigerants.
2. Use recovery equipment rated for R-410A refrigerant.
3. Use manifold gauges rated for R-410A (800 psi/250 psi low).
4. R-410A is a binary blend of HFC-32 and HFC-125.
5. R-410A is nearly azeotropic—similar to R-22 and R-12. Although nearly azeotropic, charge with liquid refrigerant.
6. R-410A operates at 40-70% higher pressure than R-22, and systems designed for R-22 cannot withstand this higher pressure.
7. R-410A has an ozone depletion potential of zero, but must be reclaimed due to its global warming potential.
8. R-410A compressors use Polyol Ester oil.
9. Polyol Ester oil is hygroscopic; it will rapidly absorb moisture and strongly hold this moisture in the oil.
10. A liquid line dryer must be used; even a deep vacuum will not separate moisture from the oil.
11. Limit atmospheric exposure to 15 minutes.
12. If compressor removal is necessary, always plug compressor immediately after removal. Purge with small amount of nitrogen when inserting plugs.

TOPPING OFF SYSTEM CHARGE

If a leak has occurred in the system, Bard Manufacturing recommends reclaiming, evacuating (see criteria above), and charging to the nameplate charge. However, if done correctly, topping off the system charge can be done without problems.

With R-410A, there are no significant changes in the refrigerant composition during multiple leaks and recharges. R-410A refrigerant is close to being an azeotropic blend (it behaves like a pure compound or single component refrigerant). The remaining refrigerant charge, in the system, may be used after leaks have occurred and then "top-off" the charge by utilizing the charging charts on the inner control panel cover as a guideline.

REMEMBER: When adding R-410A refrigerant, it must come out of the charging cylinder/tank as a liquid to avoid any fractionation, and to insure optimal system performance. Refer to instructions for the cylinder that is being utilized for proper method of liquid extraction.

WARNING

Failure to conform to these practices could lead to injury or death.

SAFETY PRACTICES

1. Never mix R-410A with other refrigerants.
2. Use gloves and safety glasses. Polyol Ester oils can be irritating to the skin, and liquid refrigerant will freeze the skin.
3. Never use air and R-410A to leak check; the mixture may become flammable.
4. Do not inhale R-410A—the vapor attacks the nervous system, creating dizziness, loss of coordination and slurred speech. Cardiac irregularities, unconsciousness and ultimate death can result from breathing this concentration.
5. Do not burn R-410A. This decomposition produces hazardous vapors. Evacuate the area if exposed.
6. Use only cylinders rated DOT4BA/4BW 400.
7. Never fill cylinders over 80% of total capacity.
8. Store cylinders in a cool area, out of direct sunlight.
9. Never heat cylinders above 125°F.
10. Never trap liquid R-410A in manifold sets, gauge lines or cylinders. R-410A expands significantly at warmer temperatures. Once a cylinder or line is full of liquid, any further rise in temperature will cause it to burst.

DESCRIPTION OF STANDARD EQUIPMENT

High/Low Pressure Switch

Provides refrigerant circuit high pressure and loss of charge protection. Includes lockout circuit built into logic control board that is resettable from room thermostat.

5-Minute Compressor Time Delay

Provides short cycle protection for the compressor which extends compressor life. Built into the electronic logic control board as standard.

Condensate Overflow

Senses and provides system shut down if draining issue causes water level to rise in the lower drain pan.

Low Ambient Control

The low ambient control permits cooling operation down to 0°F outdoor ambient.

IMPORTANT INSTALLER NOTE

For improved start-up performance, wash the indoor coil with a dishwasher detergent.

PHASE MONITOR

All units with three phase scroll compressors are equipped with a 3 phase line monitor to prevent compressor damage due to phase reversal.

The phase monitor in this unit is equipped with two LEDs. If the Y signal is present at the phase monitor and phases are correct the green LED will light and the compressor contactor is allowed to energize.

If phases are reversed, the red fault LED will be lit and compressor operation is inhibited.

If a fault condition occurs, reverse two of the supply leads to the unit. Do not reverse any of the unit factory wires as damage may occur.

THREE PHASE SCROLL COMPRESSOR START UP INFORMATION

Scroll compressors, like several other types of compressors, will only compress in one rotational direction. Direction of rotation is not an issue with single phase compressors since they will always start and run in the proper direction.

However, three phase compressors will rotate in either direction depending upon phasing of the power. Since there is a 50-50 chance of connecting power in such a way as to cause rotation in the reverse direction, ***verification of proper rotation must be made.*** Verification of proper rotation direction is made by observing that suction pressure drops and discharge pressure rises when the compressor is energized. Reverse rotation also results in an elevated sound level over that with correct rotation, as well as, substantially reduced current draw compared to tabulated values.

Verification of proper rotation must be made at the time the equipment is put into service. If improper rotation is corrected at this time there will be no negative impact on the durability of the compressor. However, reverse operation for even one hour may have a negative impact on the bearing due to oil pump out.

All three phase scroll compressors used in the I-TEC series are wired identically internally. As a result, once the correct phasing is determined for a specific system or installation, connecting properly phased power leads to the same Fusite terminal should maintain proper rotation direction. The direction of rotation of the motor may be changed by reversing any two line connections to the unit.

SERVICE HINTS

1. Caution user to maintain clean air filters at all times and to not needlessly close off supply air registers. This may reduce airflow through the system, which shortens equipment service life as well as increasing operating costs and noise levels.
2. Check all power fuses or circuit breakers to be sure they are the correct rating.
3. Periodic cleaning of the outdoor coils to permit full and unrestricted airflow circulation is essential.
4. Annual maintenance is required to make sure that all of the systems are functioning properly.
   a. Check to make sure that the drains are not obstructed in any way.
   b. Remove any debris in the condenser section of the unit.
   c. Inspect and wash outdoor coils as necessary.
5. All motors are sealed and require no oiling.

SEQUENCE OF OPERATION

Cooling Part Load

On a call for cooling, the thermostat completes a circuit from R to Y1 sending the signal to the compressor logic control board. The compressor logic control board verifies that the high pressure switch, the low pressure switch and the float switch control are all in the closed position. The compressor logic control board also verifies that the condenser float switch control is in the open position. It then energizes the A terminal output. Following 10 seconds of the A terminal being energized, the CC terminal is energized and outdoor motor initiates.

The G (indoor motor) circuit is automatically completed on any call for cooling operation or can be energized by manual fan switch switch on sub-base for constant air circulation.

Cooling Full Load

Circuit R-Y1 & Y2 makes at the thermostat energizing the 2nd stage solenoid in the compressor. The default position of the compressor staging solenoid is non-energized. The compressor will run at low capacity until this solenoid is energized.

Heating Stage 1

Circuit R-G & W1 makes at the thermostat energizing the corresponding heater contactors. The indoor blower is also energized.

Heating Stage 2

Circuit R & W2 makes at the thermostat energizing the corresponding heater contactors. The indoor blower remains energized.

Alarm Relay Output

Alarm terminal is output connection for applications where alarm relay is employed. This terminal is powered whenever the compressor is locked out due to HP or LP sequences as described below.

NOTE: *Both high and low pressure switch controls are inherently automatic reset devices. The high pressure switch and low pressure switch cut out and cut in settings are fixed by specific air conditioner unit model. The lockout features, both soft and manual, are a function of the compressor logic control board.*

Logic Control Board

If the controller operates in normal mode, the green status light blinks. This indicates that 24 volt power is applied to the board and the controller is running in normal operation.

On initial power up and call for compressor, a 5-minute delay plus a random start delay of 0 to 0 seconds is applied. After the random delay, the compressor relay is energized (terminal CC). When the Y1 input opens, the compressor de-energizes.

Freeze Stat

When the Y signal is sent to the logic control board, the signal will travel from the dehum board through the freeze stat and give 24 volt power at the Y1 terminal of the compressor logic control board. Following that, the output will energize 10 seconds prior to CC output that starts the compressor.

Anti-Short Cycle Timer

After compressor shutdown, or power disruption, a 5-minute timer is applied which prevents the compressor from operating.

High Pressure Switch

(Terminals HP1 and HP2) Circuit will be proved as "closed" prior to energizing A or CC terminals. If pressure switch opens, compressor will go into soft lockout mode and compressor operation will be terminated; green fault light will be illuminated. Logic control will then go through 5-minute delay on break plus random start sequence. If no fault is found on next run cycle, compressor will continue operation. If fault reoccurs, a hard lockout will be initiated and fault signal is sent to L terminal.

Low Pressure Switch

(Terminals LP1 and LP2) Circuit will be proved as "closed" prior to energizing A or CC terminals. The condition of the LP terminals will then be ignored for the first 90 seconds after a demand for compressor operation. Following this 90-second period, if pressure switch opens, compressor will go into soft lockout mode and compressor operation will be terminated; orange fault light will be illuminated. The compressor control board will then go through a 5-minute delay on break plus random start sequence. If no fault is found on next run cycle, compressor will continue operation. If fault reoccurs, hard lockout will be initiated and the fault signal is sent to the L terminal.

Float Switch (Evaporator)

(Terminals FS1 and FS2) Circuit will be proved as "closed" prior to energizing CC terminal. If float switch opens, compressor will go into soft lockout mode and compressor operation will be terminated; red fault light will be illuminated. Compressor logic control will then go through 5-minute delay on break plus random start sequence. If no fault is found on next run cycle, compressor will continue operation. If fault reoccurs, hard lockout will be initiated and fault signal is sent to L terminal.

Condenser Overflow

(Terminals CO1 and CO2) Circuit will be proved as "open" prior to energizing A or CC terminals. If flow switch closes, compressor will go into soft lockout mode and compressor operation will be terminated; yellow fault light will be illuminated. If fault clears, the compressor logic control will then go through 5-minute delay on break plus random start sequence. If no fault is found on next run cycle, compressor will continue operation. If fault reoccurs, or did not clear the first time after 30 seconds, the control will go into hard lockout and fault signal is sent to L.

Over and Under Voltage Protection

When an under or over voltage condition exists, the controller locks out the unit. When condition clears, the controller automatically releases the unit to normal operation and the compressor restarts after the random start and anti-short cycle timings are met. The under and over voltage protection starts at plus or minus 20% from nominal voltage and returns to operation at plus or minus 10% from nominal voltage. All four LED fault lights will flash when an under or over voltage condition occurs. The over voltage protection can be disabled by removing the O/V jumper on the logic control board (see Figure 20 on page 34).

FIGURE 20

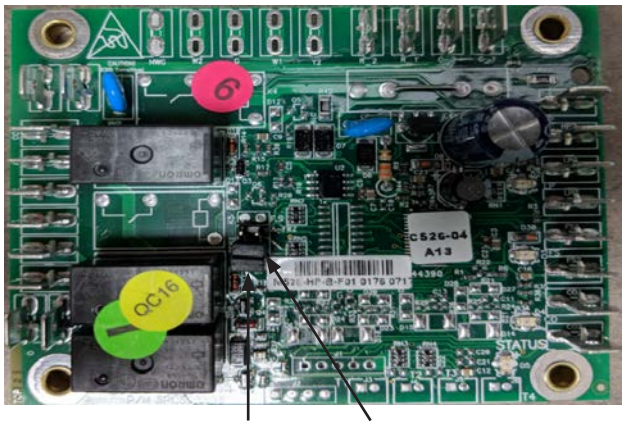

Intelligent Reset

The compressor logic control board has an intelligent reset feature after a safety control is activated. The controller locks out the unit for 5 minutes; at the end of this period, the controller checks to verify that all faults have been cleared. If faults have been cleared, the controller restarts the unit. If a second fault occurs, the controller will lockout the unit until the control is reset by breaking Y signal from thermostat. The last fault will be kept in memory after a full lockout; this is only cleared by cycling the unit power.

Alarm Output

The L terminal has 24 volts applied when a hard lockout occurs. This can be used to drive a fault light or a low voltage relay.

PRESSURE SERVICE PORTS

High and low pressure service ports are installed on all units so that the system operating pressures can be observed. Pressure tables covering all models can be found on pages 67 and 68. It is imperative to match the correct pressure table to the unit by model number.

This unit employs high-flow Coremax valves instead of the typical Shrader type valves.

WARNING! Do NOT use a Schrader valve core removal tool with these valves. Use of such a tool could result in eye injuries or refrigerant burns!

To change a Coremax valve without first removing the refrigerant, a special tool is required which can be obtained at www.fastestinc.com/en/SCCA07H. See the replacement parts manual for replacement core part numbers.

LOWERING OUTDOOR FAN SPEED FOR SOUND

Supplied in the literature assembly is a fan control resistor assembly that can be installed to lower the fan speed for reduced sound performance. This resistor assembly is to be installed in series with the outdoor fan control thermistor to change the temperature curve that the fan logic control sees.

It is anticipated that a 2-3% drop in system capacity and efficiency will be seen when this resistor is installed.

To install the resistor assembly:

1. Locate fan control resistor assembly in literature packet hanging on right inside door of unit.
2. Throw main power disconnect to the “OFF” position to eliminate risk of injury or death due to electrical shock.
3. Remove four (4) screws that retain the control panel cover to the unit.
4. Locate fan logic control board.
5. Locate one of the red leads of the fan control thermistor where it attaches to the fan logic control and remove it.
6. Install resistor in-line with the thermistor lead removed in Step #5, and then connect back onto the fan logic control board.

GENERAL DESCRIPTION

The I-TEC Commercial Room Ventilator (CRV) is designed to be used with all Bard I-TEC models. The only intent of this device is to provide the required ventilation by delivering fresh air to meet IAQ (indoor air quality) requirements. In the installed application, this system also includes exhaust provisions which are balanced with the intake air to maintain building pressurization requirements of ASHRAE 62.1 Standard.

Ventilation is accomplished with two blower/ motor assemblies for maximum ventilation at low sound levels. The intake and exhaust blowers are programmed independently and are balanced to maintain a slight positive pressurization in accordance to ASHRAE 62.1 Standard.

The I-TEC CRV is also provided with filters to reduce the required service needed and to further improve the IAQ. The exhaust air blowers are protected by disposable filters and the intake air blowers are protected by washable filters. Both are accessible without the need for tools.

CONTROL WIRING

The I-TEC CRV comes wired from the factory set to 375 CFM of ventilation. Care must be taken when deciding how to control the operation of the ventilator. When designing the control circuit for the ventilator, the following requirements must be met.

1. The indoor blower must be run whenever the I-TEC CRV is run.
2. Select and configure the correct CFM ventilation level that the I-TEC CRV needs to operate and configure the system to this level following later instructions within this section. Over ventilating serves no useful purpose and significantly affects the overall efficiency of the heat pump system. System operating costs would also increase.
3. Run the I-TEC CRV only during periods when the conditioned space is occupied. Running the ventilation during unoccupied periods wastes energy, decreases the expected life of the CRV, and can result in large moisture buildup in the structure. Running the CRV when the structure is unoccupied allows moisture to build up in the structure because there is little or no cooling load. Thus, the air conditioner is not running enough to remove the excess moisture being brought in. Use a control system that in some way can control the system based upon occupancy.

NOTICE

Operating the I-TEC CRV during unoccupied periods can result in a build up of excess moisture in the structure.

RECOMMENDED CONTROL SEQUENCES

Several possible scenarios are listed below:

1. Use a programmable electronic thermostat with auxiliary terminal to control the CRV based on daily programmed occupance periods. Bard markets and recommends Bard Part #8403-060 programmable electronic thermostat.
2. Use Bard CompleteStat™ that incorporates temperature, humidity and occupancy control with learning capability into a single device. No programming required.
3. Use a DDC control system to control the CRV-based upon a room occupancy schedule to control the CRV.
4. Tie the operation of the CRV into the light switch. The lights in a room are usually on only when occupied.
5. Use a manual timer that the occupants turn to energize the CRV for a specific number of hours.
6. Use a programmable mechanical timer to energize the CRV and indoor blower during occupied periods of the day.

NOTE: *The ventilation package comes with a blower interlock function, but is disabled when it is shipped from the factory in case a thermostat with an occupancy output or occupancy sensor is not utilized. In this situation, "A" terminal must be tied to "G" terminal to drive the ventilation package. If a thermostat or control that drives occupancy output is utilized, the tape from the orange wire located in the low voltage terminal box will need to be removed and the orange wire connected to the "G" terminal to activate this function. (See Figures 13-19 on pages 24 to 30.)*

SETTING THE VENTILATION CFM LEVELS

The I-TEC CRV has four pre-set levels of ventilation CFM available. These are 300, 375, 450 and 525 CFM of ventilation air. The I-TEC CRV is shipped from the factory set on the 375 CFM ventilation level. To change between these four different levels of provided

ventilation CFM, first refer to Figure 21 to look up the corresponding CFM needed for the intake and exhaust blowers to meet the design criteria and determine which "speed/wire color" is needed. Then, perform the following steps.

WARNING

- ***Hazard of electrical shock.***
- ***Electrical shock can result in serious injury or death.***
- ***Disconnect the remote electric power supply or supplies before servicing.***

1. Open front swinging doors of main unit (by popping front door latches).
2. Throw main power disconnect to the "OFF" position to eliminate risk of injury or death due to electrical shock.
3. Remove five (5) screws holding front CRV door in place (see Figure 22).
4. Locate "Brown Wire with White Trace" that has a black terminal on the end where it connects to the terminal strip (see Figure 21).
5. Move "Brown Wire with White Trace" to the corresponding CFM level needed in accordance with Figure 21.

FIGURE 21
CRV Motor Speed/CFM Configuration

VENT OPTION INTAKE/EXHAUST SPEEDS		
WIRE COLOR	SPEED	NOM. CFM
BLACK	HI	525
BLUE	MED-HI	450
ORANGE	MED-LO	375
RED	LO	300
TO CHANGE SPEEDS, MOVE BROWN WIRE WITH WHITE TRACE. 7961-755-2		

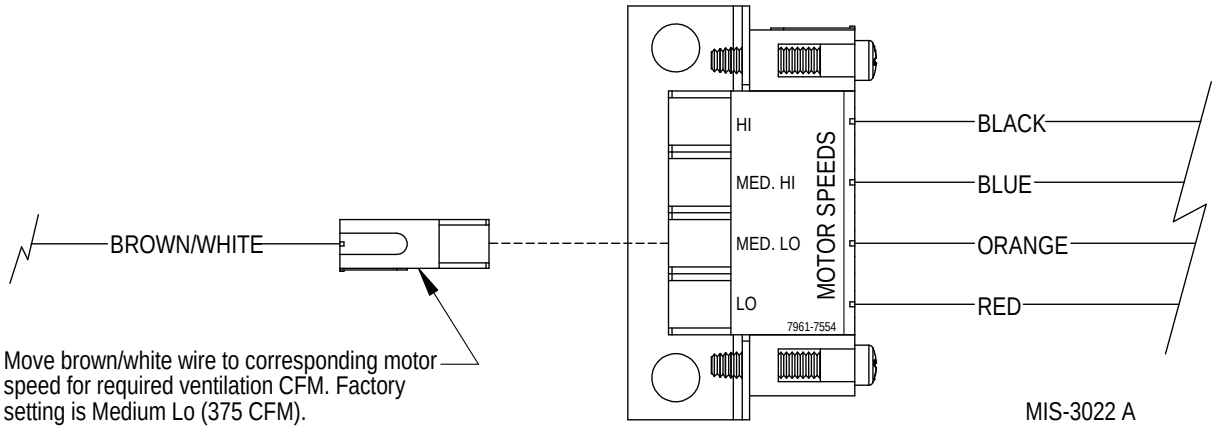

FIGURE 22
CRV Speed Change Terminal Access

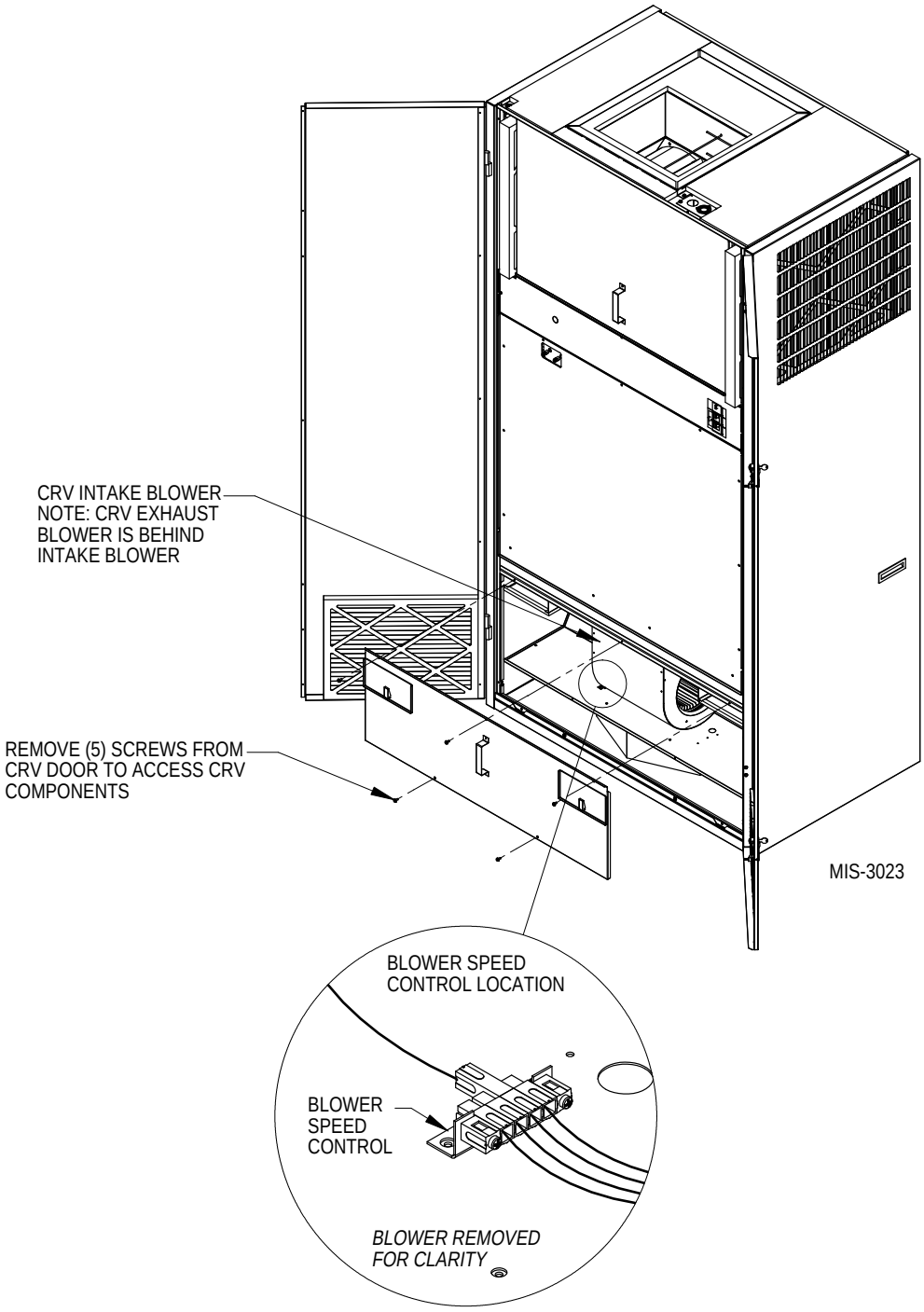

I-TEC COMBINATION CRV AND ECONOMIZER VENTILATION SYSTEM (VENT CODE "N")

NOTICE

Operating the I-TEC CRV during unoccupied periods can result in a build up of excess moisture in the structure.

GENERAL DESCRIPTION

The I-TEC Combination Commercial Room Ventilator (CRV) and Dry Bulb Economizer is designed to be used with all Bard I-TEC models. This ventilation package and its control provides two roles:

- It will provide the required ventilation by delivering fresh air to meet IAQ (Indoor Air Quality) requirements through CRV portion of the device.
- It will provide up to 525 CFM of free outdoor cooling CFM when the outdoor ambient temperature is below the outdoor thermostat setpoint.

Ventilation is accomplished with two blower/motor assemblies for maximum ventilation at low sound levels. The intake and exhaust blowers are programmed independently and are balanced to maintain a slight positive pressurization in accordance to ASHRAE 62.1 Standard.

The ventilation package is also provided with filters to reduce the required service needed and to further improve the IAQ. The exhaust air blowers are protected by disposable filters and the intake air blowers are protected by washable filters. Both are accessible without the need for tools.

CONTROL WIRING

Refer to Low Voltage Connection (Figure 19).

Reference Figure 23 for Control Sequence of Operation.

FIGURE 23
Economizer Control Circuit

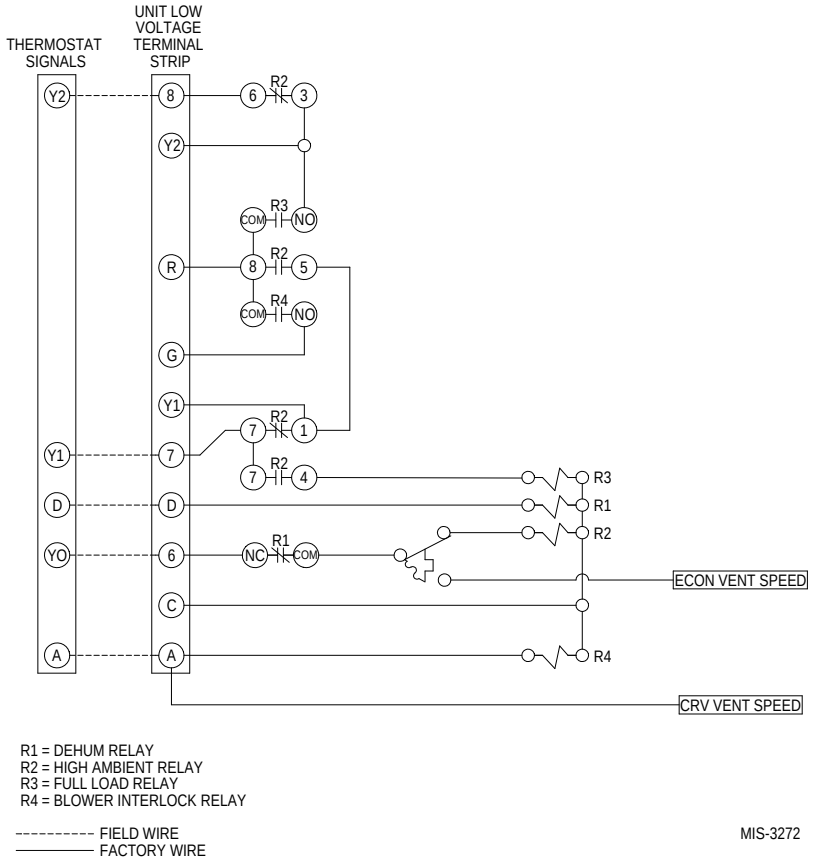

SETTING THE VENTILATION CFM LEVELS

The I-TEC CRV has four pre-set levels of ventilation CFM available. These are 300, 375, 450 and 525 CFM of ventilation air. This ventilation package is shipped from the factory set on the 375 CFM ventilation level while the economizer portion is set on the 525 CFM ventilation level. To change between these four different levels of provided ventilation CFM, refer to Figure 24 to look up the corresponding CFM needed for the intake and exhaust blowers to meet the design criteria and determine which "speed/wire color" is needed.

WARNING

Open disconnect to shut all power OFF before doing this! Failure to do so could result in injury or death due to electrical shock.

Perform the following steps:

1. Open front swinging doors of main unit (by popping front door latches).
2. Throw main power disconnect to the "OFF" position to eliminate risk of injury or death due to electrical shock.
3. Remove six (6) screws holding front CRV door in place (see Figure 22).
4. For CRV blower speed, locate brown wire with white trace that has as black terminal on the end where it connects to the terminal strip (see Figure 24).
5. Move the brown wire with white trace to the corresponding CFM level needed in accordance with Figure 24.
6. For economizer blower speed, locate pink wire that has a black terminal on the end where it connects to the terminal strip (see Figure 24).
7. Move the pink wire to the corresponding CFM level needed in accordance with Figure 24.

FIGURE 24
Motor Speed/CFM Configuration

VENT OPTION INTAKE/EXHAUST SPEEDS		
WIRE COLOR	SPEED	NOM. CFM
BLACK	HI	525
BLUE	MED-HI	450
ORANGE	MED-LO	375
RED	LO	300
TO CHANGE SPEEDS, MOVE BROWN WIRE WITH WHITE TRACE. 7961-755-2		

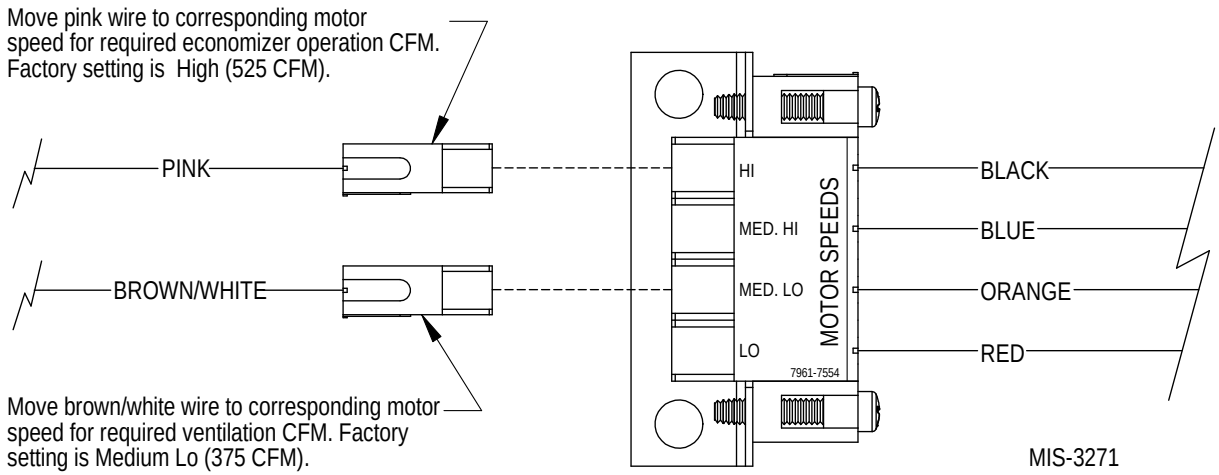

I-TEC ECONOMIZER SEQUENCE OF OPERATION

If Outdoor Temperature is Below Outdoor Thermostat Setpoint

On call from CompleteStat™ for first stage cooling:

- "YO" thermostat signal powers vent blower motors at Economizer Speed/Airflow (black – 525 CFM) through NC contacts of Relay "R1" ("Dehum Relay").

On call from CompleteStat™ for first and second stage cooling:

- "YO" thermostat signal powers vent blower motors at Economizer Speed/Airflow (black – 525 CFM) through NC contacts of Relay "R1" ("Dehum Relay").
- "Y1" thermostat signal powers "Y1" terminal on unit low voltage terminal strip through NC contacts of relay "R2" ("High Ambient Relay").

On call from CompleteStat™ for first, second and third stage cooling:

- "YO" thermostat signal powers vent blower motors at Economizer Speed/Airflow (black – 525 CFM) through NC contacts of Relay "R1" ("Dehum Relay").
- "Y1" thermostat signal powers "Y1" terminal on unit low voltage terminal strip through NC contacts of relay "R2" ("High Ambient Relay").
- "Y2" thermostat signal powers "Y2" terminal on unit low voltage terminal strip through NC contacts of relay "R2" ("High Ambient Relay").

If Outdoor Temperature is Above Outdoor Thermostat Setpoint

On call from CompleteStat for first stage cooling:

- "YO" thermostat signal powers relay coil "R2". "R2" relay then closes NO contact between "R" and "Y1" at low voltage terminal strip engaging stage 1 mechanical cooling. NC contacts of relay "R2" that connects thermostat "Y1" to "Y1" on low voltage terminal strip is opened to eliminate feedback.

On call from CompleteStat™ for first and second stage cooling:

- "YO" thermostat signal powers relay coil "R2". "R2" relay then closes NO contact between "R" and "Y1" at low voltage terminal strip engaging stage 1 mechanical cooling. NC contacts of relay "R2" that connects thermostat "Y1" to "Y1" on low voltage terminal strip is opened to eliminate feedback.
- "Y1" thermostat signal powers relay coil "R3" through now closed relay contacts "R2" closing contacts between "R" and "Y2" at low voltage terminal strip.
- "Y2" thermostat signal will do nothing, as NC contacts of relay "R2" are now opened to eliminate any feedback to thermostat.

Dehumidification Mode

On call from CompleteStat™ for dehumidification:

- "D" thermostat signal powers relay coil "R1" (Dehum. Relay). "R1" relay, then opens NC contact between "YO" and outdoor thermostat.
  - This will then negate any ECONOMIZER SPEED SIGNAL from energizing the ventilation package.
  - "Y1" & "Y2" thermostat signals will pass through NC contacts of Relay "R2" ("High Ambient Relay") as relay coil "R2" will be rendered inoperable by "R1" contacts opening. Normal cooling calls can then still apply to override Dehum. call.

HEATING MODE OPERATION

CompleteStat should never energize "YO" terminals in conjunction with "B", so relay "R2" will never energize, and neither will Economizer Ventilation Speed.

"Y1" and "Y2" signals will pass through NC contacts of relay "R2" contacts, and all heating operations will be normal.

VENTILATION MODE

The call for ventilation will never be disrupted with this control circuit. Anytime "A" signal from CompleteStat is present, the "VENTILATION SPEED" of the vent package will be energized. "A" Signal from thermostat will also energize relay "R4" ("Blower Interlock Relay") completing a circuit from "R" to "G" through the "NO" contacts to ensure blower operations on the ventilation call.

I-TEC MODULATING COMMERCIAL ROOM VENTILATOR SYSTEM (VENT CODE "Q")

NOTICE

Operating the I-TEC CRV during unoccupied periods can result in a build up of excess moisture in the structure.

GENERAL DESCRIPTION

The I-TEC Commercial Room Ventilator (CRV) is designed to be used with all Bard I-TEC models. The only intent of this device is to provide the required ventilation by delivering fresh air to meet IAQ (Indoor Air Quality) requirements. In the installed application, this system also includes exhaust provisions which are balanced with the intake air to maintain building pressurization requirements of ASHRAE 62.1 Standard.

Ventilation is accomplished with two blower/motor assemblies for maximum ventilation at low sound levels. The intake and exhaust blowers are programmed independently and are balanced to maintain a slight positive pressurization in accordance to ASHRAE 62.1 Standard.

The I-TEC CRV is also provided with filters to reduce the required service needed and to further improve the IAQ. The exhaust air blowers are protected by disposable filters, and the intake air blowers are protected by washable filters. Both are accessible without the need for tools.

CONTROL WIRING

The I-TEC CRV comes wired from the factory set to 375 CFM of ventilation. Care must be taken when deciding how to control the operation of the ventilator. When designing the control circuit for the ventilator, the following requirements must be met.

1. The indoor blower must be run whenever the I-TEC CRV is run.
2. Select and configure the correct CFM ventilation level that the I-TEC CRV needs to operate and configure the system to this level following later instructions within this section. Over ventilating serves no useful purpose and significantly affects the overall efficiency of the heat pump system. System operating costs would also increase.
3. Run the I-TEC CRV only during periods when the conditioned space is occupied. Running the ventilation during unoccupied periods wastes energy, decreases the expected life of the CRV, and can result in large moisture buildup in the structure. Running the CRV when the structure is unoccupied allows moisture to build up in the structure because there is little or no cooling load. Thus, the air conditioner is not running enough to remove the excess moisture being brought in. Use a control system that in some way can control the system based upon occupancy.

RECOMMENDED CONTROL SEQUENCES

Several possible scenarios are listed below:

1. Use a programmable electronic thermostat with auxiliary terminal to control the CRV based on daily programmed occupance periods. Bard markets and recommends Bard Part #8403-060 programmable electronic thermostat.
2. Install a Bard CompleteStat™ with occupancy sensor which learns the room usage and automatically engages ventilation (see Figure 18).
3. Use a DDC control system based upon a room occupancy schedule to control the CRV.
4. Tie the operation of the CRV into the light switch. The lights in a room are usually on only when occupied.
5. Use a manual timer that the occupants turn to energize the CRV for a specific number of hours.
6. Use a programmable mechanical timer to energize the CRV and indoor blower during occupied periods of the day.

NOTE: *The ventilation package comes with a blower interlock function, but is disabled when it is shipped from the factory in case a thermostat with an occupancy output or occupancy sensor is not utilized and "A" terminal to "G" terminal must be tied to drive the ventilation package. If a thermostat or control does drive occupancy output, remove the tape from the orange wire located in the low voltage terminal box and connect it to the "G" terminal to activate this function. (See Figures 13-19.)*

CHANGING VENTILATION CFM RATES IN MANUAL MODE

WARNING

- HAZARD OF ELECTRICAL SHOCK.
- ELECTRICAL SHOCK CAN RESULT IN SERIOUS INJURY OR DEATH.
- DISCONNECT THE REMOTE ELECTRIC POWER SUPPLY OR SUPPLIES BEFORE SERVICING.

7961-755-1

To adjust the airflow ventilation rate, first refer to Figure 25A to look up the "FLOW INDEX" needed for the intake and exhaust blowers for the CFM required. Then, perform the following steps:

1. Open front swinging doors of main unit (by popping front door latches).
2. Throw main power disconnect to the "OFF" position to eliminate risk of injury or death due to electrical shock.
3. Remove five (5) screws holding front CRV door in place (see Figure 27 on page 45).
4. Remove CRV control panel cover by removing four (4) screws (see Figure 27).
5. Locate two 0-10Vdc motor control boards in control panel (see Figure 28 on page 46).
6. On intake motor control board, observing "GREEN STATUS LIGHT", turn manual adjust potentiometer counterclockwise to increase "FLOW INDEX" or clockwise to reduce "FLOW INDEX" to match desired setting.

NOTE: *After long pause, the green status light will blink long-blinks for the "TEN COUNT" of the "FLOW RATE INDEX", then immediately followed by fast blinks which indicate the second digit. For example, a flow index of 23 would be two long blinks, followed by three fast blinks of the "GREEN STATUS LIGHT".*

7. On exhaust motor control board, observing "GREEN STATUS LIGHT", turn manual adjust potentiometer counterclockwise to increase "FLOW INDEX" or clockwise to reduce "FLOW INDEX" to match desired setting.

NOTE: *Same "GREEN STATUS LIGHT" blink as Step #6.*

CHANGING TO FULLY MODULATING MODE

If the CRV is to be operated in fully variable mode (Fig. 25B) (only run at required speed to maintain setpoint CO_2 levels), the CRV will need to be configured to the following:

1. Open front swinging doors of main unit (by popping front door latches).
2. Throw main power disconnect to the "OFF" position to eliminate risk of injury or death due to electrical shock.
3. Remove CRV control panel cover by removing four (4) screws (see Figure 27).
4. Locate two 0-10Vdc motor control boards in control panel (see Figure 28 on page 46).
5. Pull jumper pins from "M" terminals, and move to "P" terminals (see Figure 28).
6. Connect "+" 0-10Vdc output from CO_2 control to Terminal #3 (along with pink wire), and connect "-" to Terminal #4 (along with purple wire) of unit low voltage terminal strip.
7. Follow the directions supplied with the CO_2 control to configure the control appropriately.

FIGURE 25A
CRV “Manual Mode” Jumper Pin on “M” Terminal

CFM	FLOW INDEX (Light Blink Code)
525	100
500	92
475	85
450	79
425	72
400	66
375	59
350	53
325	46
300	40
275	33
250	27
225	20
200	14
175	7
150	1

To adjust the airflow ventilation rate (NO CO_2 CONTROL/NON-MODULATING), determine the "FLOW INDEX" needed for the intake and exhaust blowers for the required CFM. Use a small phillips-head screwdriver to make adjustments.

1. Locate two (2) 0-10Vdc motor control boards in control panel.
2. On ***intake*** motor control board (right hand side of control panel), observing "GREEN STATUS LIGHT", turn manual adjust potentiometer counterclockwise to increase "FLOW INDEX" or clockwise to reduce "FLOW INDEX" to match desired setting. (NOTE: After long pause, the green status light will blink long-blinks for the "TEN COUNT" of the "FLOW RATE INDEX", which then is immediately followed by fast blinks which indicate the second digit. For example, a Flow Index of 23 would be two long blinks, followed by 3 fast blinks of the green status light.)
3. On ***exhaust*** motor control board (left hand side of control panel), observing "GREEN STATUS LIGHT", turn manual adjust potentiometer counterclockwise to increase "FLOW INDEX" or clockwise to reduce "FLOW INDEX" to match desired setting. (See NOTE in Step 2.)

FIGURE 25B
CRV “Modulating Mode” Jumper Pin on “P” Terminal

CFM	Vdc Signal from CO_2 Control
525	10
500	9.4
475	8.8
450	8.2
425	7.6
400	7
375	6.4
350	5.8
325	5.2
300	4.6
275	4
250	3.4
225	2.8
200	2.2
175	1.6
150	1

After determining the air volume rates needed for the intended application (maximum and minimum), use this table to program CO_2 control output voltages in correlation to the CO_2 levels needed when Bard CO_2 Control 8403-096 is applied.

FIGURE 26
Ventilation Airflow Diagram

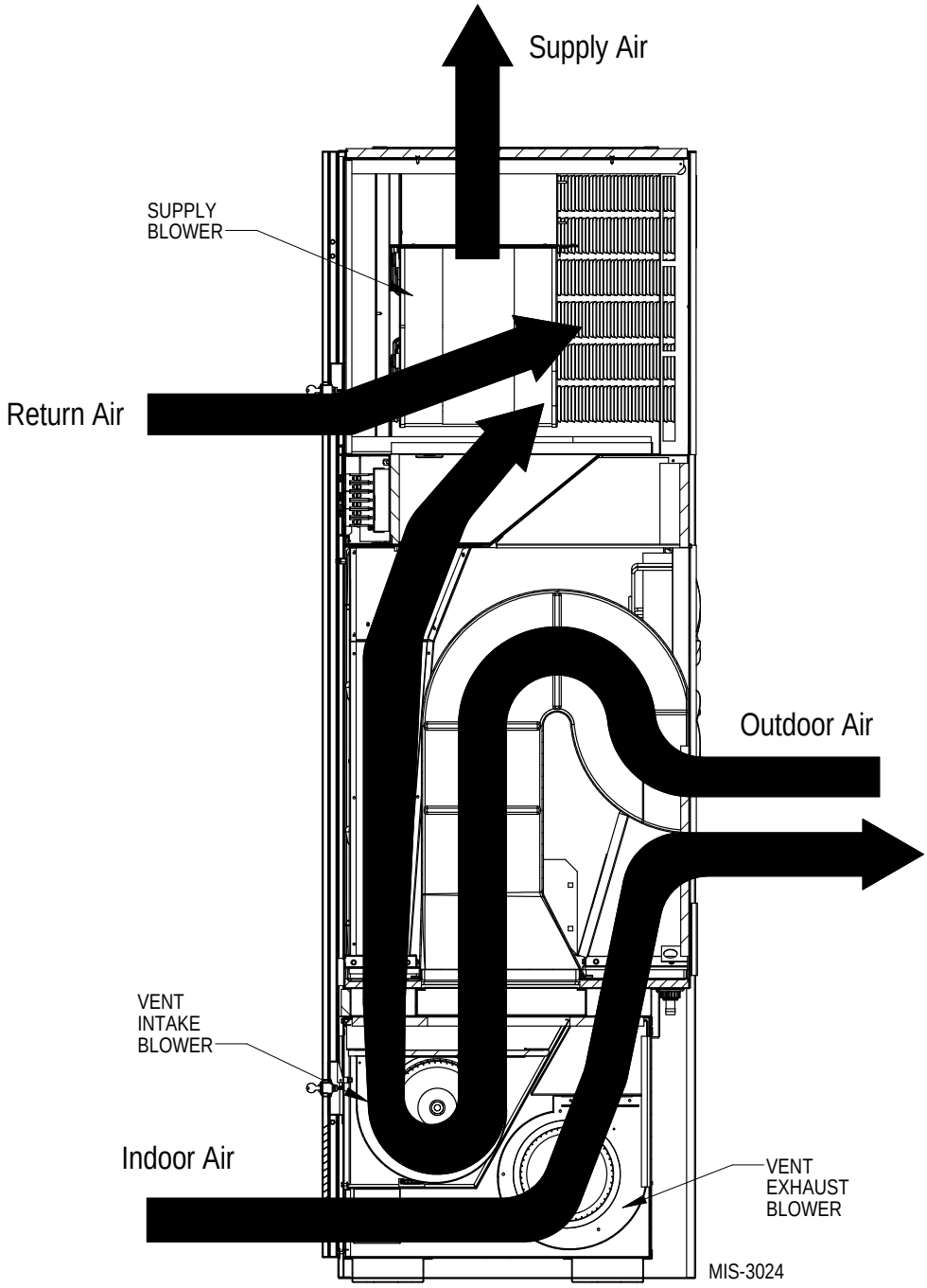

FIGURE 27
CRV Control Access

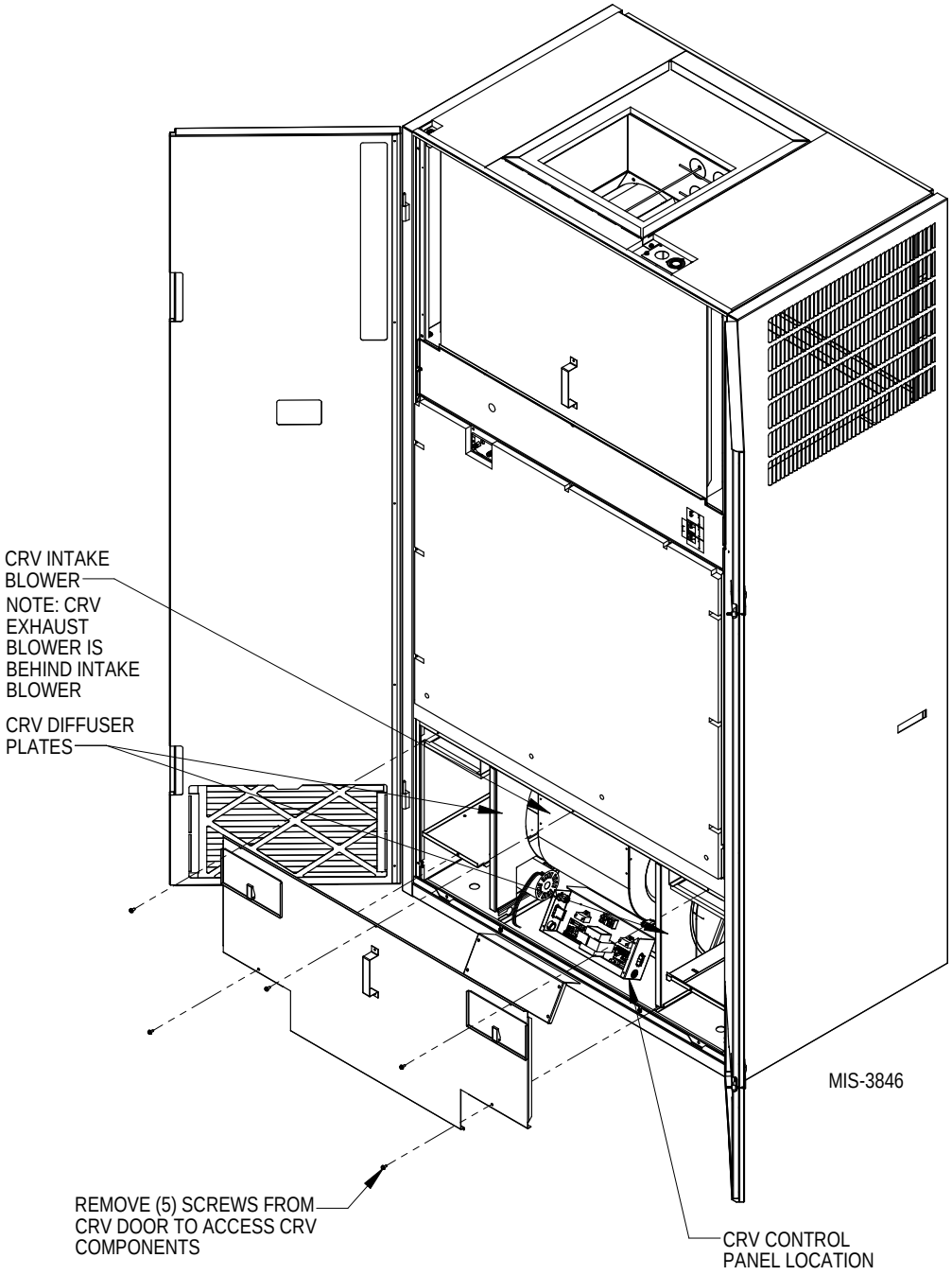

FIGURE 28
Control Board Configuration/Setting

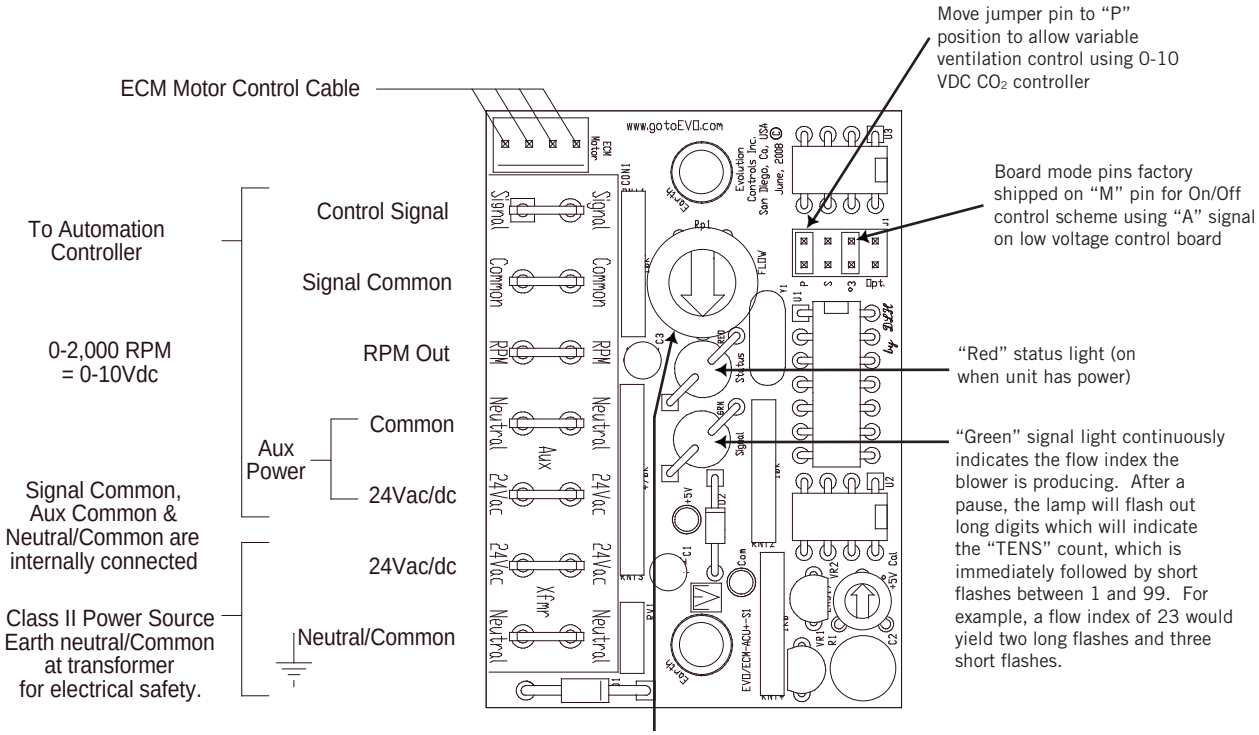

CONFIGURING BARD PART #8403-096 CO_2 CONTROL for CRV MODULATING CONTROL

Bard part #8403-096 carbon dioxide and temperature transmitters accurately monitor the CO_2 concentration and temperature in schools, office buildings and other indoor environments to help achieve LEED® certification.

Specifications

Range: CO_2: 0 to 2000 or 0 to 5000 ppm (depending on model)
Temperature: 32 to 122°F (0 to 50°C)

Accuracy: ±40 ppm + 3% of reading

Temperature Dependence: ±8 ppm/°C at 1100 ppm

Non-Linearity: 16 ppm

Pressure Dependence: 0.13% of reading per mm of Hg

Response Time: 2 minutes for 99% step change

Ambient Operating Temperature: 32 to 122°F (0 to 50°C)

Ambient Operating Humidity: 10 to 95% RH (non-condensing)

Power Requirements: 16 to 35 VDC/19 to 28 VAC

Power Consumption: Average: 2 watts;
Peak: 3.75 watts

Sensor: Single beam, dual-wave length NDIR

Output: Current: 4 to 20 mA (max 500 Ω)
Voltage: 0 to 5 VDC or 0 to 10 VDC (min 500 Ω)
Relay: SPST NO 2A @ 30 VDC
RTD or thermistor per r-t curves (depending on model)

Weight: 5.6 oz (158.8 g)

WARNING Disconnect power supply before installation to prevent electrical shock and equipment damage.

Make sure all connections are in accordance with the job wiring diagram and in accordance with national and local electrical codes. Use copper conductors only.

CAUTION Use electrostatic discharge precautions (e.g., use of wrist straps) during installation and wiring to prevent equipment damage.

CAUTION Avoid locations where severe shock or vibration, excessive moisture or corrosive fumes are present.

CAUTION Do not exceed ratings of this device, permanent damage not covered by warranty may result.

NOTICE Upon powering the transmitter, the firmware version will flash on the display. A warm up period of 30 minutes is required for the transmitter to adjust to the current CO_2 concentration.

NOTICE Self calibration feature of the transmitter requires exposure to normal outdoor equivalent carbon dioxide level once every thirty days.

Mounting

1. Push tab on bottom of cover and lift cover from back plate.
2. Select the mounting location, away from diffusers, lights or any external influences.
3. Mount transmitter on a vertical surface to a standard electrical box using the two #6 M2C type screws provided.
4. Pull wires through sub-base hole and make necessary connections.
5. Reattach cover to base plate.

Wiring

Use maximum 18 AWG wire for wiring to terminals. Refer to Figures 13-19 for wiring information.

Selection of Voltage Outputs

Prior to wiring, verify the voltage selector jumpers on jumpers PJ1 and PJ2 are set to voltage (see figure below).

Current/Voltage Output Selection Jumper (PJ1 & PJ2)

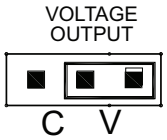

Next, move jumper PJ5 to the 0-10V range (see figure below).

Output Range Selection Jumper PJ5

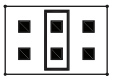

Editing Menu Parameters

Before any adjustment can be made to the transmitter, the menu lockout jumper (PJ4) must be set to the "ON" position (see figure below).

Menu Lockout Jumper

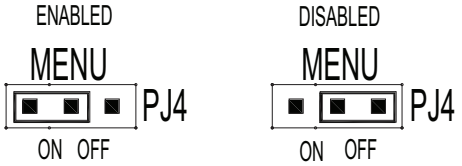

Finish installing/wiring the control. Then, refer to Figure 21 and the building ventilation specifications to decide what the maximum ventilation rate desired is and what the minimum/maximum voltage signal is required for those levels.

Next, enter the control programming stage listed below once the system is powered-up to configure the control.

Accessing Menu Parameters

Step 1: To enter the menu structure, press △ and ▽ simultaneously for 5 seconds (display will show RON parameter).

Step 2: Press △ or ▽ to cycle between menu items.

Step 3: Press ▭ to edit the value for the displayed menu item (SET will appear on display).

Step 4: Press △ or ▽ to adjust the value of the menu item.

Step 5: Press ▭ to save the changes (SET will disappear).

Step 6: Repeat Steps 2 through 5 for each of the parameters.

Step 7: To exit the menu at any time, press and hold △ and ▽ simultaneously for 5 seconds or wait 10 seconds without pushing any buttons.

Menu Descriptions

RON Relay on setpoint
Sets the CO_2 concentration which the optional relay is energized.
Low limit: 0 PPM
Factory setting: 1000 PPM
High limit: 2000/5000 PPM (depending on model)

ROF Relay off setpoint
Sets the CO_2 concentration which the optional relay is de-energized. Setting value lower than RON provides direct action for detecting high concentrations of CO_2. Setting value higher than RON provides indirect action for detecting low concentrations of CO_2. △ or ▽ on the LCD display will be lit to indicate when the relay is energized.
Low limit: 0 PPM
Factory setting: 950 PPM
High limit: 2000/5000 PPM (depending on model)

DSP Display configuration
Determines the LCD display configuration during normal operation. The LCD display can indicate the CO_2 concentration and the temperature, the CO_2 concentration only or the temperature only. The factory default is to display both the temperature and the CO_2 concentration.
CT CO_2 concentration and temperature
C CO_2 concentration only
T Temperature only

UNI Units selection
Temperature and barometric pressure measurements can be displayed in US engineering units or SI engineering units. The factory default is to display US engineering units.

US units F for temperature and in Hg for barometeric pressure

SI units C for temperature and hPa for barometric pressure

COL CO_2 low output range
Sets the CO_2 concentration for the lowest output (4 mA or 0 VDC).
Low limit: 0 PPM
Factory setting: 0 PPM
High limit: 2000/5000 PPM (depending on model)

COH CO_2 high output range
Sets the CO_2 concentration for the highest output (20 mA, 5 VDC or 10 VDC). When COH is set above COL, the transmitter is direct acting and the output will increase with an increase in CO_2 level. When COH is below COL, the transmitter is reverse acting and the output will increase with a decrease in CO_2 level.
Low limit: 0 PPM
Factory setting: 2000/5000 PPM (depending on model)
High limit: 2000/5000 PPM (depending on model)

TOL Temperature low output range
Sets the temperature for the lowest output (4 mA or 0 VDC).
Low limit: 32.0°F/0.0°C
Factory setting: 32.0°F/0.0°C
High limit: 122.0°F/50.0°C

TOH Temperature high output range
Sets the temperature for the highest output (20 mA, 5 VDC or 10 VDC). When TOH is set above TOL, the transmitter is direct acting and the output will increase with an increase in temperature. When TOH is below TOL, the transmitter is reverse acting and the output will increase with a decrease intemperature.
Low limit: 32.0°F/0.0°C
Factory setting: 122.0°F/50.0°C
High limit: 122.0°F/50.0°C

BAR Barometric pressure
Sets the typical barometric pressure for the location where the transmitter is mounted. The factory setting is for standard pressure at sea level. Adjusting the barometric pressure gives a more accurate measurement, especially at higher elevations.
Low limit: 20.0 in Hg/600 hPa
Factory setting: 29.9 in Hg/1013 hPa
High limit: 32.0 in Hg/1100 hPa

I-TEC ENERGY RECOVERY VENTILATOR SYSTEM (VENT CODE "R")

GENERAL DESCRIPTION

The I-TEC Energy Recovery Ventilator (ERV) was designed to provide energy efficient, cost effective ventilation to meet IAQ (indoor air quality) requirements while still maintaining good indoor comfort and humidity control for a variety of applications such as schools, classrooms, lounges, conference rooms and others. It provides a constant supply of fresh air for control of airborne pollutants including CO_2, smoke, radon, formaldehyde, excess moisture, virus and bacteria.

The ERV incorporates rotary heat exchanger technology to remove both heat and moisture. The package consists of unique rotary Energy Recovery Cassettes that can be easily removed for cleaning or maintenance. It has two 15" diameter heat transfer wheels for efficient heat transfer. The heat transfer wheels use a permanently bonded dry dessicant coating for total heat recovery.

The I-TEC ERV is also provided with filters to reduce the required service needed and to extend the life of the heat recovery wheels. The exhaust air blower is protected by disposable filters and the intake air blower is protected by washable filters. Both are accessible without the need for tools.

Ventilation is accomplished with two blower/motor assemblies for maximum ventilation at low sound levels. The intake and exhaust blowers can be independently adjusted to maintain desired building pressurization conditions. The rotating wheels provide the heat transfer effectively during both summer and winter conditions. Provides required ventilation to meet the requirements of ASHRAE 62.1 Standard.

NOTE: During operation below 5°F outdoor temperature, freezing of moisture in the heat transfer wheel can occur. Consult the factory if this possibility exists.

The I-TEC ERV can be controlled in different ways. It can be turned ON/OFF with an occupancy control, thermostat or CO_2 control. It can also be configured for fully modulating variable speed with a CO_2 control to only bring in the minimal amount of ventilation required (helping to minimize sound levels and ventilation load on the structure).

CONTROL WIRING

The I-TEC ERV comes wired from the factory ready to operate in manual mode (ON/OFF cycling) and set to 375 CFM of ventilation. Care must be taken when deciding how to control the operation of the ventilator. When designing the control circuit for the ventilator, the following requirements must be met:

1. The indoor blower must be run whenever the I-TEC ERV is run.
2. Select and configure the correct CFM ventilation level that the I-TEC ERV needs to operate and configure the system to this level following later instructions within this section. Over ventilating serves no useful purpose and significantly affects the overall efficiency of the system. System operating costs would also increase.
3. Run the I-TEC ERV only during periods when the conditioned space is occupied. Running the ERV during unoccupied periods wastes energy, decreases the expected life of the ERV, and can result in large moisture buildup in the structure. The ERV removes 60-70% of the moisture in the incoming air, not 100% of it. Running the ERV when the structure is unoccupied allows moisture to build up in the structure because there is little or no cooling load. Thus, the air conditioner is not running enough to remove the excess moisture being brought in. Use a control system that in some way can control the system based upon occupancy.

NOTICE

Operating the I-TEC ERV during unoccupied periods can result in a build up of excess moisture in the structure.

RECOMMENDED CONTROL SEQUENCES

Several possible scenarios are listed below:

1. Use a programmable electronic thermostat with auxiliary terminal to control the ERV based on daily programmed occupance periods. Bard markets and recommends Bard Part #8403-060 programmable electronic thermostat.
2. Install a Bard CompleteStat™ with occupancy sensor which learns room usage and automatically engages ventilation.
3. Use a DDC control system to control the ERV based upon a room occupancy schedule to control the ERV.
4. Tie the operation of the ERV into the light switch. The lights in a room are usually on only when occupied.

5. Use a manual timer that the occupants turn to energize the ERV for a specific number of hours.
6. Use a programmable mechanical timer to energize the ERV and indoor blower during occupied periods of the day.

NOTE: *The ventilation package comes with a blower interlock function, but is disabled when it is shipped from the factory in case a thermostat with an occupancy output or occupancy sensor is not utilized. In this situation, "A" terminal must be tied to "G" terminal to drive the ventilation package. If a thermostat or control that drives occupancy output is utilized, the tape from the orange wire located in the low voltage terminal box will need to be removed and the orange wire connected to the "G" terminal to activate this function. (See Figures 13-19 on pages 24 to 30.)*

CHANGING VENTILATION CFM RATES IN MANUAL MODE

⚠ WARNING

- ***Hazard of electrical shock.***
- ***Electrical shock can result in serious injury or death.***
- ***Disconnect the remote electric power supply or supplies before servicing.***

To adjust the airflow ventilation rate, first refer to Figure 29A on page 52 to look up the "FLOW INDEX" needed for the intake and exhaust blowers for the CFM required. Then, perform the following steps:

1. Open front swinging doors of main unit (by popping front door latches).
2. Throw main power disconnect to the "OFF" position to eliminate risk of injury or death due to electrical shock.
3. Remove five (5) screws holding front ERV door in place (see Figure 31 on page 54).
4. Remove ERV control panel cover by removing four (4) screws (see Figure 31).
5. Locate two 0-10Vdc motor control boards in control panel (see Figure 32 on page 55).
6. On intake motor control board, observing "GREEN STATUS LIGHT", turn manual adjust potentiometer counterclockwise to increase "FLOW INDEX" or clockwise to reduce "FLOW INDEX" to match desired setting.

   NOTE: *After long pause, the green status light will blink long-blinks for the "TEN COUNT" of the "FLOW RATE INDEX", then immediately followed by fast blinks which indicate the second digit. For example, a Flow Index of 23 would be two long blinks, followed by three fast blinks of the "GREEN STATUS LIGHT".*
7. On exhaust motor control board, observing "GREEN STATUS LIGHT", turn manual adjust potentiometer counterclockwise to increase "FLOW INDEX" or clockwise to reduce "FLOW INDEX" to match desired setting.

   NOTE: *Same "GREEN STATUS LIGHT" blink as Step #6.*

CHANGING TO FULLY MODULATING MODE

To operate the ERV in fully variable mode (only run at required speed to maintain set-point CO_2 levels), the ERV needs to be configured to the following:

1. Open front swinging doors of main unit (by popping front door latches).
2. Throw main power disconnect to the "OFF" position to eliminate risk of injury or death due to electrical shock.
3. Remove ERV control panel cover by removing four (4) screws (see Figure 31 on page 54).
4. Locate two 0-10Vdc motor control boards in control panel (see Figure 32 on page 55).
5. Pull jumper pins from "M" terminals and move to "P" terminals (see Figure 32).
6. Connect "+" 0-10Vdc output from CO_2 control to Terminal #3 (along with pink wire) and connect "-" to Terminal #4 (along with purple wire) of unit low voltage terminal strip.
7. Follow the directions supplied with the CO_2 control to configure the control appropriately.

PERFORMANCE AND APPLICATION DATA

Summer Cooling Performance
(Indoor Design Conditions 75°DB/62°WB)

Ambient O.D.		VENTILATION RATE 450 CFM 65% EFFICIENCY						VENTILATION RATE 375 CFM 66% EFFICIENCY						VENTILATION RATE 300 CFM 67% EFFICIENCY					
DB/WB	F	VLT	VLS	VLL	HRT	HRS	HRL	VLT	VLS	VLL	HRT	HRS	HRL	VLT	VLS	VLL	HRT	HRS	HRL
	75	21465	14580	6884	13952	9477	4475	17887	12150	5737	11805	8018	3786	14310	9720	4590	9587	6512	3075
105	70	14580	14580	0	9477	9477	0	12150	12150	0	8018	8018	0	9720	9720	0	6512	6512	0
	65	14580	14580	0	9477	9477	0	12150	12150	0	8018	8018	0	9720	9720	0	6512	6512	0
	80	31590	12150	19440	20533	7897	12635	26325	10125	16200	17374	6682	10692	21060	8100	12960	14110	5427	8683
	75	21465	12150	9314	13952	7897	6054	17887	10125	7762	11805	6682	5123	14310	8100	6210	9587	5427	4160
100	70	12352	12150	202	8029	7897	131	10293	10125	168	6793	6682	111	8235	8100	135	5517	5427	90
	65	12150	12150	0	7897	7897	0	10125	10125	0	6682	6682	0	8100	8100	0	5427	5427	0
	60	12150	12150	0	7897	7897	0	10125	10125	0	6682	6682	0	8100	8100	0	5427	5427	0
	80	31590	9720	21870	20533	6318	14215	26325	8100	18225	17374	5345	12028	21060	6480	14580	14110	4341	9768
	75	21465	9720	11744	13952	6318	7634	17887	8100	9787	11805	5345	6459	14310	6480	7830	9587	4341	5246
95	70	12352	9720	2632	8029	6318	1711	10293	8100	2193	6793	5345	1447	8235	6480	1755	5517	4341	1175
	65	9720	9720	0	6318	6318	0	8100	8100	0	5345	5345	0	6480	6480	0	4341	4341	0
	60	9720	9720	0	6318	6318	0	8100	8100	0	5345	5345	0	6480	6480	0	4341	4341	0
	80	31590	7290	24300	20533	4738	15794	26325	6075	20250	17374	4009	13365	21060	4860	16200	14110	3256	10854
	75	21465	7290	14175	13952	4738	9213	17887	6075	11812	11805	4009	7796	14310	4860	9450	9587	3256	6331
90	70	12352	7290	5062	8029	4738	3290	10293	6075	4218	6793	4009	2784	8235	4860	3375	5517	3256	2261
	65	7290	7290	0	4738	4738	0	6075	6075	0	4009	4009	0	4860	4860	0	3256	3256	0
	60	7290	7290	0	4738	4738	0	6075	6075	0	4009	4009	0	4860	4860	0	3256	3256	0
	80	31590	4860	26730	20533	3159	17374	26325	4050	22275	17374	2672	14701	21060	3240	17820	14110	2170	11939
	75	21465	4860	16605	13952	3159	10793	17887	4050	13837	11805	2672	9132	14310	3240	11070	9587	2170	7416
85	70	12352	4860	7492	8029	3159	4870	10293	4050	6243	6793	2672	4120	8235	3240	4995	5517	2170	3346
	65	4860	4860	0	3159	3159	0	4050	4050	0	2672	2672	0	3240	3240	0	2170	2170	0
	60	4860	4860	0	3159	3159	0	4050	4050	0	2672	2672	0	3240	3240	0	2170	2170	0
	75	21465	2430	19035	13952	1579	12372	17887	2025	15862	11805	1336	10469	14310	1620	12690	9587	1085	8502
80	70	12352	2430	9922	8029	1579	6449	10293	2025	8268	6793	1336	5457	8235	1620	6615	5517	1085	4432
	65	4252	2430	1822	2764	1579	1184	3543	2025	1518	2338	1336	1002	2835	1620	1215	1899	1085	814
	60	2430	2430	0	1579	1579	0	2025	2025	0	1336	1336	0	1620	1620	0	1085	1085	0
	70	12352	0	12352	8029	0	8029	10293	0	10293	6793	0	6793	8235	0	8235	5517	0	5517
75	65	4252	0	4252	2764	0	2764	3543	0	3543	2338	0	2338	2835	0	2835	1899	0	1899
	60	0	0	0	0	0	0	0	0	0	0	0	0	0	0	0	0	0	0

Winter Heating Performance
(Indoor Design Conditions 70°F DB)

Ambient O.D.	VENTILATION RATE					
	450 CFM 80% EFFICIENCY		375 CFM 81% EFFICIENCY		300 CFM 82% EFFICIENCY	
DB/°F	WVL	WHR	WVL	WHR	WVL	WHR
65	2430	1944	2025	1640	1620	1328
60	4860	3888	4050	3280	3240	2656
55	7290	5832	6075	4920	4860	3985
50	9720	7776	8100	6561	6480	5313
45	12150	9720	10125	8201	8100	6642
40	14580	11664	12150	9841	9720	7970
35	17010	13608	14175	11481	11340	9298
30	19440	15552	16200	13122	12960	10627
25	21870	17496	18225	14762	14580	11955
20	24300	19440	20250	16402	16200	13284
15	26730	21384	22275	18042	17820	14612

LEGEND:

VLT = Ventilation Load – Total
VLS = Ventilation Load – Sensible
VLL = Ventilation Load – Latent
HRT = Heat Recovery – Total
HRS = Heat Recovery – Sensible
HRL = Heat Recovery – Latent
WVL = Winter Ventilation Load
WHR = Winter Heat Recovery

Note: All performance data is based on operating intake and exhaust blower on the same speed.

FIGURE 29A
ERV “Manual Mode” Jumper Pin on “M” Terminal

CFM	FLOW INDEX (Light Blink Code)
450	100
425	89
400	83
375	76
350	59
325	50
300	40
275	32
250	25
225	12
200	9
175	4
150	1

To adjust the airflow ventilation rate (NO CO_2 CONTROL/NON-MODULATING), determine the "FLOW INDEX" needed for the intake and exhaust blowers for the required CFM. Use a small phillips-head screwdriver to make adjustments.

1. Locate two (2) 0-10Vdc motor control boards in control panel.
2. On ***intake*** motor control board (right hand side of control panel), observing "GREEN STATUS LIGHT", turn manual adjust potentiometer counterclockwise to increase "FLOW INDEX" or clockwise to reduce "FLOW INDEX" to match desired setting. (NOTE: After long pause, the green status light will blink long-blinks for the "TEN COUNT" of the "FLOW RATE INDEX", which then is immediately followed by fast blinks which indicate the second digit. For example, a Flow Index of 23 would be two long blinks, followed by 3 fast blinks of the green status light.)
3. On ***exhaust*** motor control board (left hand side of control panel), observing "GREEN STATUS LIGHT", turn manual adjust potentiometer counterclockwise to increase "FLOW INDEX" or clockwise to reduce "FLOW INDEX" to match desired setting. (See NOTE in Step 2.)

FIGURE 29B
ERV “Modulating Mode” Jumper Pin on “P” Terminal

CFM	Vdc Signal from CO_2 Control
450	10
425	8.87
400	8.31
375	7.61
350	6.73
325	5.91
300	5.15
275	4.58
250	4.06
225	2.91
200	2.57
175	2.24
150	1.74
125	0.96
100	0.77

After determining the air volume rates needed for the intended application (maximum and minimum), use this table to program CO_2 control output voltages in correlation to the CO_2 levels needed when Bard CO_2 Control 8403-096 is applied.

FIGURE 30
Ventilation Airflow Diagram

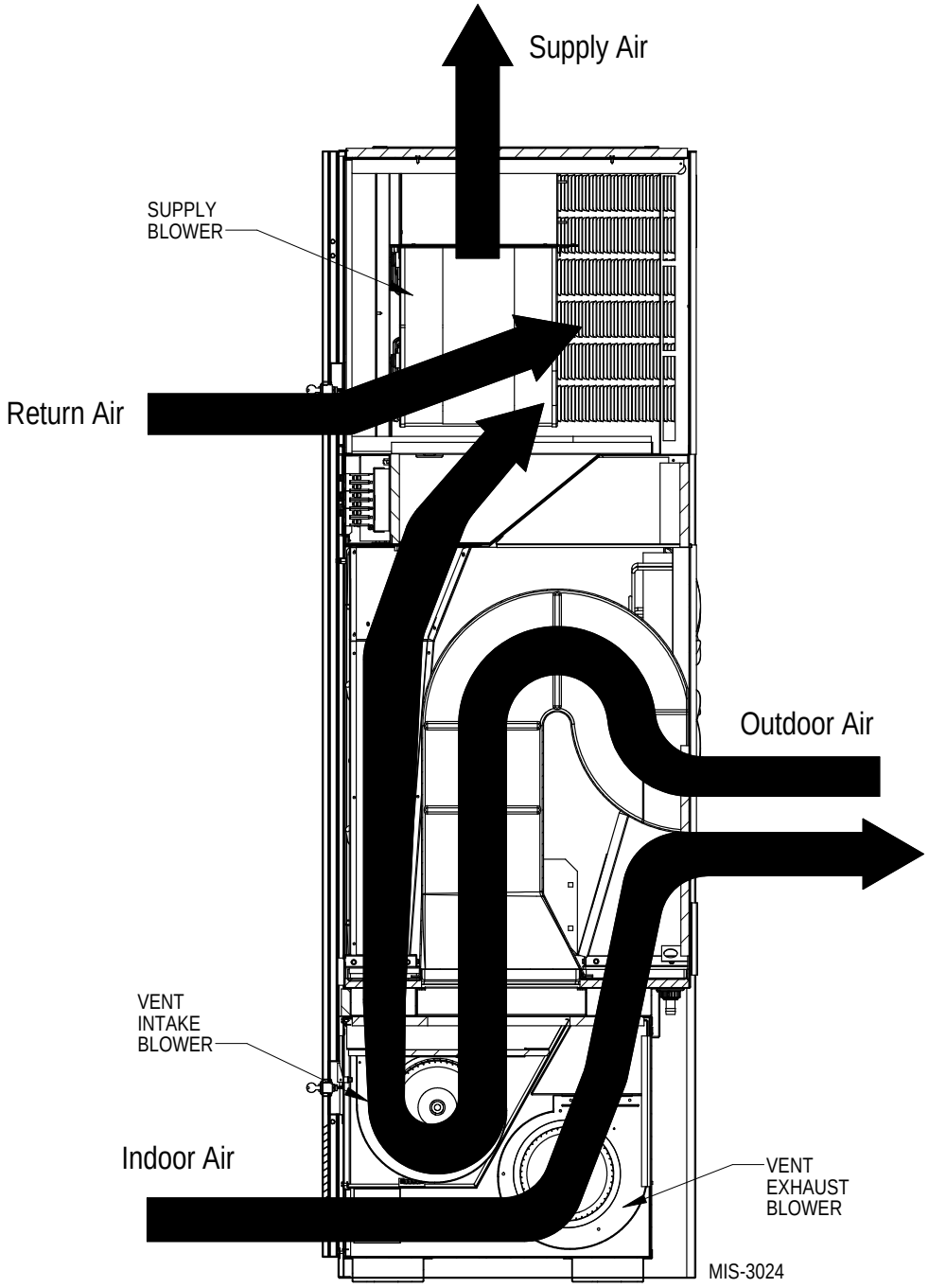

FIGURE 31
ERV Access

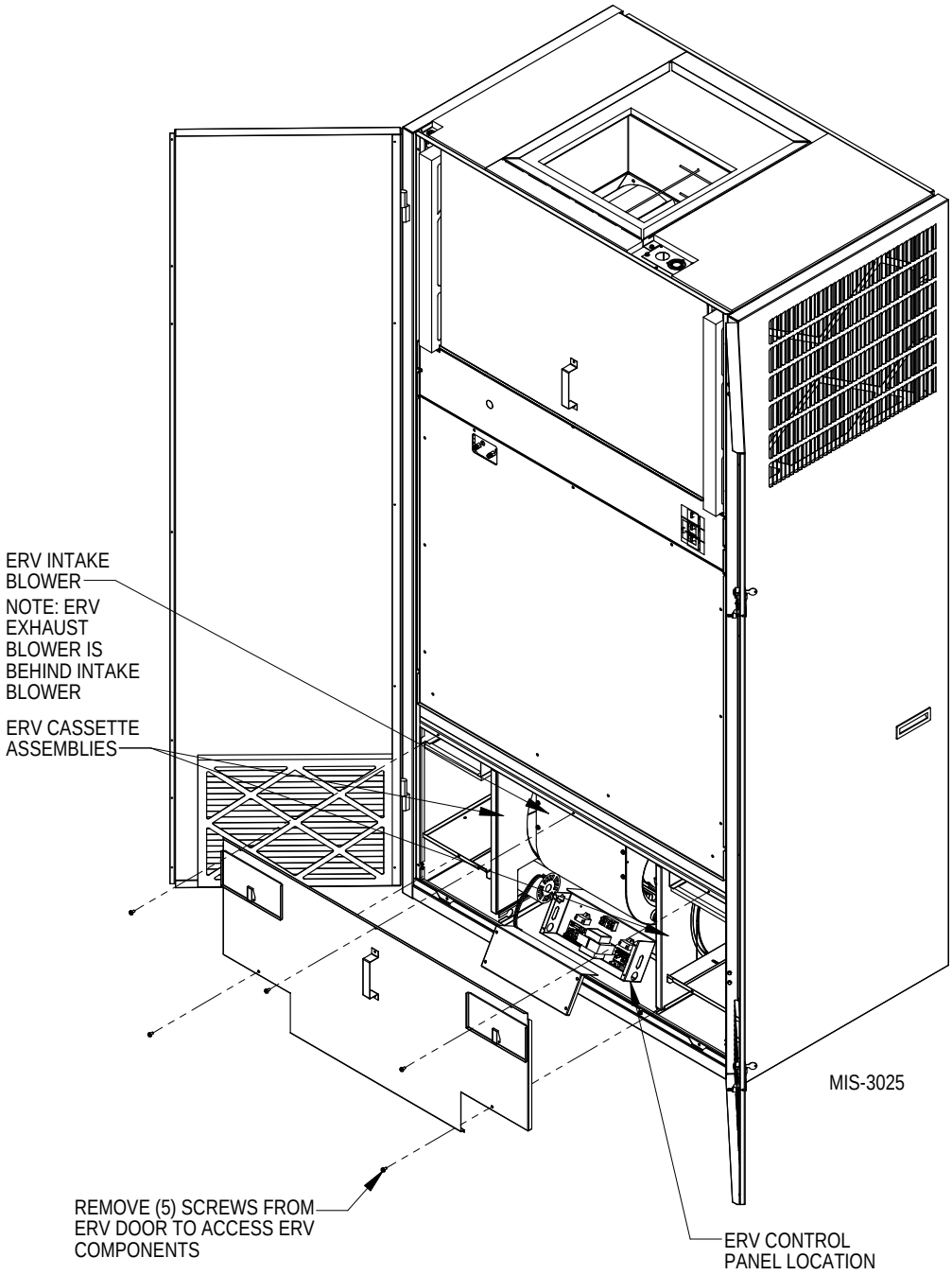

FIGURE 32
Control Board Configuration/Setting

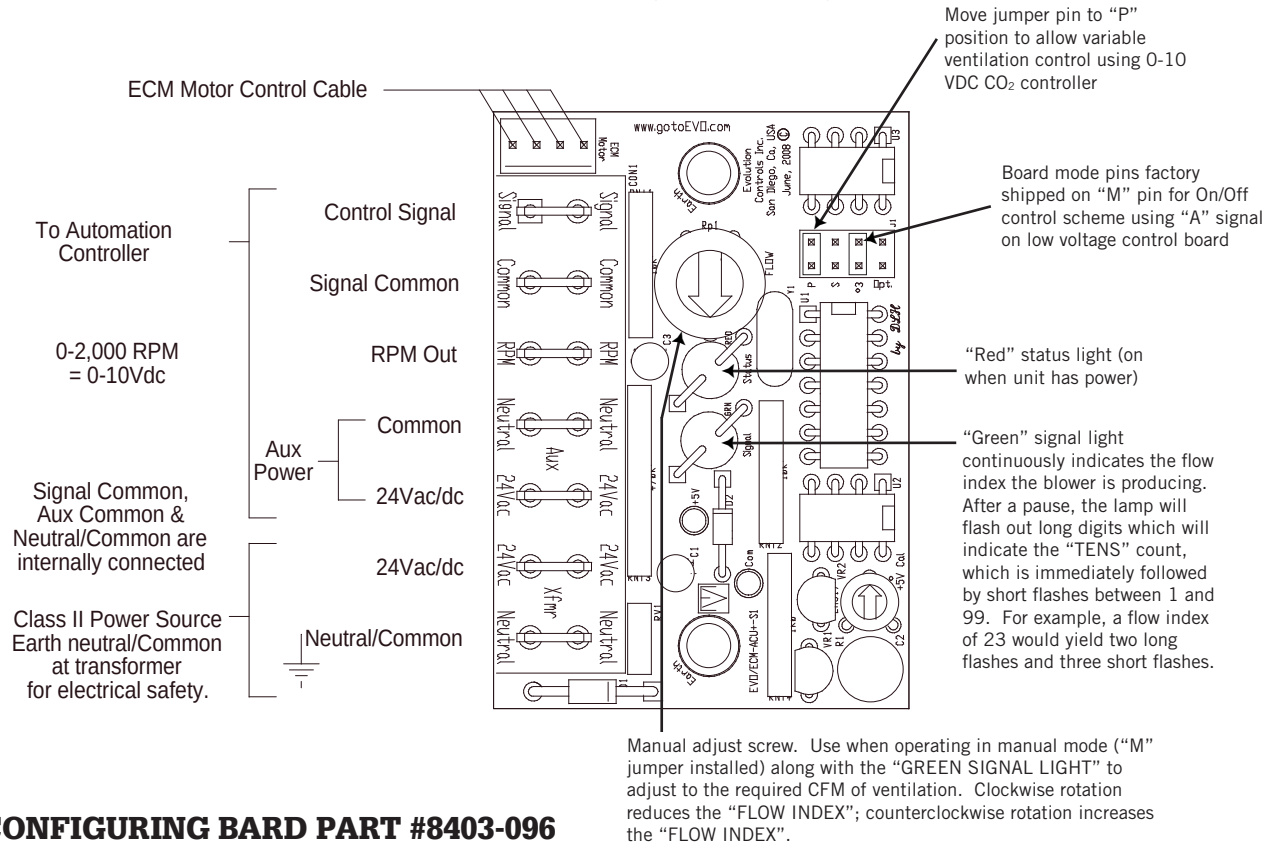

CONFIGURING BARD PART #8403-096 CO_2 CONTROL for ERV MODULATING CONTROL

Bard part #8403-096 carbon dioxide and temperature transmitters accurately monitor the CO_2 concentration and temperature in schools, office buildings and other indoor environments to help achieve LEED® certification.

Specifications

Range: CO_2: 0 to 2000 or 0 to 5000 ppm (depending on model)
Temperature: 32 to 122°F (0 to 50°C).
Accuracy: ±40 ppm + 3% of reading.
Temperature Dependence: ±8 ppm / °C at 1100 ppm.
Non-Linearity: 16 ppm.
Pressure Dependence: 0.13% of reading per mm of Hg.
Response Time: 2 minutes for 99% step change.
Ambient Operating Temperature: 32 to 122°F (0 to 50°C).
Ambient Operating Humidity: 10 to 95% RH (non-condensing).
Power Requirements: 16 to 35 VDC / 19 to 28 VAC.
Power Consumption: Average: 2 watts; Peak: 3.75 watts.
Sensor: Single beam, dual-wave length NDIR.
Output:
Current: 4 to 20 mA (max 500 Ω);
Voltage: 0 to 5 VDC or 0 to 10 VDC (min 500 Ω);
Relay: SPST NO 2A @ 30 VDC;
RTD or thermistor per r-t curves (depending on model)
Weight: 5.6 oz (158.8 g)

WARNING Disconnect power supply before installation to prevent electrical shock and equipment damage.

Make sure all connections are in accordance with the job wiring diagram and in accordance with national and local electrical codes. Use copper conductors only.

CAUTION Use electrostatic discharge precautions (e.g., use of wrist straps) during installation and wiring to prevent equipment damage.

CAUTION Avoid locations where severe shock or vibration, excessive moisture or corrosive fumes are present.

CAUTION Do not exceed ratings of this device, permanent damage not covered by warranty may result.

NOTICE Upon powering the transmitter, the firmware version will flash on the display. A warm up period of 30 minutes is required for the transmitter to adjust to the current CO_2 concentration.

NOTICE Self calibration feature of the transmitter requires exposure to normal outdoor equivalent carbon dioxide level once every thirty days.

Mounting

1. Push tab on bottom of cover and lift cover from back plate.
2. Select the mounting location, away from diffusers, lights or any external influences.
3. Mount transmitter on a vertical surface to a standard electrical box using the two #6 M2C type screws provided.
4. Pull wires through sub base hole and make necessary connections.
5. Reattach cover to base plate.

Wiring

Use maximum 18 AWG wire for wiring to terminals. Refer to Figures 13-19 on pages 24 to 30 for wiring information.

Selection of Voltage Outputs

Prior to wiring, verify the voltage selector jumpers on jumpers PJ1 and PJ2 are set to voltage.

CURRENT/VOLTAGE OUTPUT SELECTION JUMPER (PJ1 & PJ2)

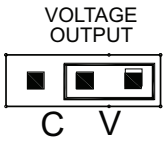

Next, move jumper PJ5 to the 0-10V range.

OUTPUT RANGE SELECTION JUMPER PJ5

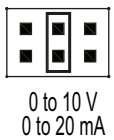

Editing Menu Parameters

Before any adjustment can be made to the transmitter, the Menu Lockout Jumper (PJ4) must be set to the "ON" position.

MENU LOCKOUT JUMPER

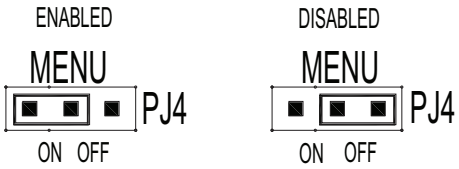

Finish installing/wiring the control. Then, refer to Figure 21B on page 38 and the building ventilation specifications to decide what the maximum ventilation rate desired is and what the minimum/maximum voltage signal is required for those levels.

Next, enter the control programming stage listed below once the system is powered up to configure the control.

Accessing Menu Parameters

Step 1: To enter the menu structure, press △ and ▽ simultaneously for 5 seconds (display will show RON parameter).

Step 2: Press △ or ▽ to cycle between menu items.

Step 3: Press ▭ to edit the value for the displayed menu item (SET will appear on display).

Step 4: Press △ or ▽ to adjust the value of the menu item.

Step 5: Press ▭ to save the changes (SET will disappear).

Step 6: Repeat Steps 2 through 5 for each of the parameters.

Step 7: To exit the menu at any time, press and hold △ and ▽ simultaneously for 5 seconds or wait 10 seconds without pushing any buttons.

Menu Descriptions

RON Relay on setpoint
Sets the CO_2 concentration which the optional relay is energized.
Low limit: 0 PPM
Factory setting: 1000 PPM
High limit: 2000/5000 PPM (depending on model)

ROF Relay off setpoint
Sets the CO_2 concentration which the optional relay is de-energized. Setting value lower than RON provides direct action for detecting high concentrations of CO_2. Setting value higher than RON provides indirect action for detecting low concentrations of CO_2. △ or ▽ on the LCD display will be lit to indicate when the relay is energized.
Low limit: 0 PPM
Factory setting: 950 PPM
High limit: 2000/5000 PPM (depending on model)

DSP Display configuration
Determines the LCD display configuration during normal operation. The LCD display can indicate the CO_2 concentration and the temperature, the CO_2 concentration only or the temperature only. The factory default is to display both the temperature and the CO_2
CT CO_2 concentration and temperature
C CO_2 concentration only
T Temperature only

UNI Units selection

Temperature and barometric pressure measurements can be displayed in US engineering units or SI engineering units. The factory default is to display US engineering units.

US units F for temperature and in Hg for barometeric pressure

SI units C for temperature and hPa for barometric pressure

COL CO_2 low output range
Sets the CO_2 concentration for the lowest output (4 mA or 0 VDC).
Low limit: 0 PPM
Factory setting: 0 PPM
High limit: 2000/5000 PPM (depending on model)

COH CO_2 high output range
Sets the CO_2 concentration for the highest output (20 mA, 5 VDC or 10 VDC). When COH is set above COL, the transmitter is direct acting and the output will increase with an increase in CO_2 level. When COH is below COL, the transmitter is reverse acting and the output will increase with a decrease in CO_2 level.
Low limit: 0 PPM
Factory setting: 2000/5000 PPM (depending on model)
High limit: 2000/5000 PPM (depending on model)

TOL Temperature low output range
Sets the temperature for the lowest output (4 mA or 0 VDC).
Low limit: 32.0°F/0.0°C
Factory setting: 32.0°F/0.0°C
High limit: 122.0°F/50.0°C

TOH Temperature high output range
Sets the temperature for the highest output (20 mA, 5 VDC or 10 VDC). When TOH is set above TOL, the transmitter is direct acting and the output will increase with an increase in temperature. When TOH is below TOL, the transmitter is reverse acting and the output will increase with a decrease intemperature.
Low limit: 32.0°F/0.0°C
Factory setting: 122.0°F/50.0°C
High limit: 122.0°F/50.0°C

BAR Barometric pressure
Sets the typical barometric pressure for the location where the transmitter is mounted. The factory setting is for standard pressure at sea level. Adjusting the barometric pressure gives a more accurate measurement, especially at higher elevations.
Low limit: 20.0 in Hg/600 hPa
Factory setting: 29.9 in Hg/1013 hPa
High limit: 32.0 in Hg/1100 hPa

ENERGY RECOVERY VENTILATOR MAINTENANCE

General Information

The ability to clean exposed surfaces within air moving systems is an important design consideration for the maintenance of system performance and air quality. The need for periodic cleaning will be a function of operating schedule, climate and contaminants in the indoor air being exhausted and in the outdoor air being supplied to the building. All components exposed to the airstream, including energy recovery wheels, may require cleaning in most applications.

Rotary counterflow heat exchanges (heat wheels) with laminar airflow are “self-cleaning” with respect to dry particles. Smaller particles pass through; larger particles land on the surface and are blown clear as the flow direction is reversed. For this reason, the primary need for cleaning is to remove films of oil-based aerosols that have condensed on energy transfer surfaces. Buildup of material over time may eventually reduce airflow. Most importantly, in the case of desiccant coated (enthalpy) wheels, such films can close off micron sized pores at the surface of the desiccant material, reducing the efficiency with which the desiccant can absorb and desorb moisture.

Frequency

In a reasonably clean indoor environment such as a school, office building or home, experience shows that reductions of airflow or loss of sensible (temperature) effectiveness may not occur for 10 or more years. However, experience also shows that measurable changes in latent energy (water vapor) transfer can occur in shorter periods of time in commercial, institutional and residential applications experiencing moderate occupant smoking or with cooking facilities. In applications experiencing unusually high levels of occupant smoking, such as smoking lounges, nightclubs, bars and restaurants, washing of energy transfer surfaces as frequently as every 6 months may be necessary to maintain latent transfer efficiency. Similar washing cycles may also be appropriate for industrial applications involving the ventilation of high

levels of smoke or oil-based aerosols such as those found in welding or machining operations, for example. In these applications, latent efficiency losses of as much as 40% or more may develop over a period of 1 to 3 years.

Cleanability and Performance

In order to maintain energy recovery ventilation systems, energy transfer surfaces must be accessible for washing to remove oils, grease, tars and dirt that can impede performance or generate odors. Washing of the desiccant surfaces is required to remove contaminate buildups that can reduce adsorption of water molecules. The continued ability of an enthalpy wheel to transfer latent energy depends upon the permanence of the bond between the desiccant and the energy transfer surfaces.

Bard wheels feature silica gel desiccant permanently bonded to the heat exchange surface without adhesives; the desiccant will not be lost in the washing process. Proper cleaning of the Bard energy recovery wheel will restore latent effectiveness to near original performance.

Maintenance Procedures

NOTE: *Local conditions can vary and affect the required time between routine maintenance procedures, therefore all sites (or specific units at a site) may not have the same schedule to maintain acceptable performance. The following timetables are recommended and can be altered based on local experience.*

Quarterly Maintenance

1. Inspect mist eliminator/prefilter and clean if necessary. This filter is located in the fresh air intake hood on the front of the unit. This is an aluminum mesh filter and can be cleaned with water and any detergent not harmful to aluminum.
2. Inspect wall mount unit filter and clean or replace as necessary. This filter is located either in the unit, in a return air filter grille assembly or both. If in the unit it can be accessed by removing the lower service door on the front of the unit. If in a return air filter grille, gain access by hinging the grille open.
3. Inspect energy recovery ventilator for proper wheel rotation and dirt buildup. This can be done in conjunction with Step 2. Energize the energy recovery ventilator after inspecting the filter and observe for proper rotation and/or dirt buildup.
4. Follow Steps 5 through 8 for recommended energy recovery wheel cleaning procedures.
5. Disconnect all power to unit. Remove the lower service door of the wall mount unit to gain access to the energy recovery ventilator.
6. Remove the front access panel on the ventilator. Unplug amp connectors to cassette motors. Slide energy recovery cassette out of ventilator.
7. Use a shop vacuum with brush attachment to clean both sides of the energy recovery wheels.
8. Reverse shop vacuum to use as a blower and blow out any residual dry debris from the wheel.

NOTE: *Discoloration and staining of the wheel does not affect its performance. Only excessive buildup of foreign material needs to be removed.*

9. If any belt chirping or squealing noise is present, apply a small amount of LPS-1 or equivalent dry film lubricant to the belt.

Annual Maintenance

1. Inspect and conduct the same procedures as outlined under ***Quarterly Maintenance***.
2. To maintain peak latent (moisture) removal capacity, it is recommended that the energy recovery wheels be sprayed with a diluted nonacid based evaporator coil cleaner or alkaline detergent solution such as 409.

NOTE: *Do not use acid-based cleaners, aromatic solvents, temperatures in excess of 170°F or steam. Damage to the wheel may result.*

Do not disassemble and immerse the entire heat wheel in a soaking solution, as bearing and other damage may result.

3. Rinse wheel thoroughly after application of the cleaning solution and allow to drain before re-installing.
4. No re-lubrication is required to heat wheel bearings of the drive motor or to the intake and exhaust blower motors.
5. If any belt chirping or squealing noise is present, apply a small amount of LPS-1 or equivalent dry film lubricant to the belt.

See Figure 33.

FIGURE 33
Hub Assembly with Ball Bearings

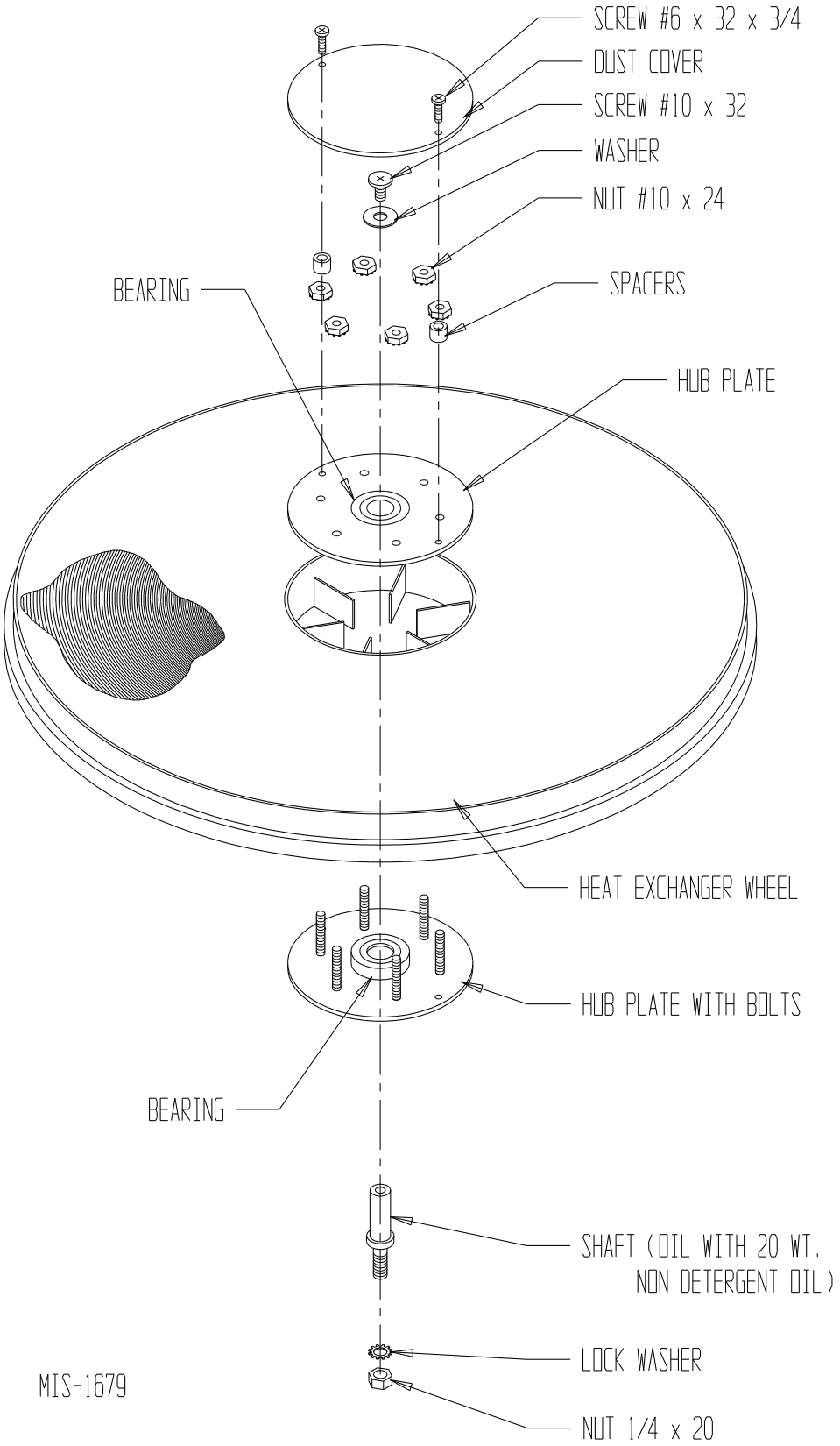

CHECKING TEMPERATURE SENSOR

1. Disconnect temperature sensor from board and from right-hand outdoor coil.
2. Use an ohmmeter and measure the resistance of the sensor. Also use ohmmeter to check for short or open.
3. Check resistance reading to chart of resistance use sensor ambient temperature. (Tolerance of part is ± 10%.)
4. If sensor resistance reads very low, sensor is shorted and will not allow proper operation of the heat pump control.
5. If sensor is out of tolerance, shorted, open or reads very low ohms, it should be replaced.

TABLE 5
Temperature (F) vs. Resistance (R) of Temperature Sensor

F	R	F	R	F	R	F	R
-25	196871	13	56985	51	19374	89	7507
-24	190099	14	55284	52	18867	90	7334
-23	183585	15	53640	53	18375	91	7165
-22	177318	16	52051	54	17989	92	7000
-21	171289	17	50514	55	17434	93	6840
-20	165487	18	49028	56	16984	94	6683
-19	159904	19	47590	57	16547	95	6531
-18	154529	20	46200	58	16122	96	6383
-17	149355	21	44855	59	15710	97	6239
-16	144374	22	43554	60	15310	98	6098
-15	139576	23	42295	61	14921	99	5961
-14	134956	24	41077	62	14544	100	5827
-13	130506	25	39898	63	14177	101	5697
-12	126219	26	38757	64	13820	102	5570
-11	122089	27	37652	65	13474	103	5446
-10	118108	28	36583	66	13137	104	5326
-9	114272	29	35548	67	12810	105	5208
-8	110575	30	34545	68	12492	106	5094
-7	107010	31	33574	69	12183	107	4982
-6	103574	32	32634	70	11883	108	4873
-5	100260	33	31723	71	11591	109	4767
-4	97064	34	30840	72	11307	110	4663
-3	93981	35	29986	73	11031	111	4562
-2	91008	36	29157	74	10762	112	4464
-1	88139	37	28355	75	10501	113	4367
0	85371	38	27577	76	10247	114	4274
1	82699	39	26823	77	10000	115	4182
2	80121	40	26092	78	9760	116	4093
3	77632	41	25383	79	9526	117	4006
4	75230	42	24696	80	9299	118	3921
5	72910	43	24030	81	9077	119	3838
6	70670	44	23384	82	8862	120	3757
7	68507	45	22758	83	8653	121	3678
8	66418	46	22150	84	8449	122	3601
9	64399	47	21561	85	8250	123	3526
10	62449	48	20989	86	8057	124	3452
11	60565	49	20435	87	7869		
12	58745	50	19896	88	7686		

TROUBLESHOOTING CONDENSATE OVERFLOW SYSTEMS

The Bard I-TEC Series is equipped with dual condensate overflow switches. One switch (float type) is located in the indoor drain pan. It is secured to the drain pan with a screw-down clamp (see Figure 34). The second switch (electronic/conductance) is a collection of two wires with the sensor probes mounted adjacent to the left outdoor coil in the outdoor drain pan (see Figure 35).

The float type switch in the indoor drain pan is equipped with an LED light that indicates when an overflow condition is present.

Three of the four switches have normally closed contacts and one (condenser overflow switch) has a normally open contact. If any of the four switches fault, their corresponding light will blink and initialize a soft lockout of the compressor circuit. If recurrence happens on the same cooling call cycle, a hard lockout of the compressor circuit will occur. (See **Sequence of Operation** on page 32.)

The compressor logic control board has five LED lights providing status updates of the system operation (see Figure 36). When the green status light is blinking, this is an indication that there is 24V power to the board. Upon an alarm detection from one of the four safety switches, there will be a blinking light indicating a fault. The faults are as follows:

HP = Green fault illumination

LP = Orange fault illumination

FS (Evap) = Red fault illumination

CO = Yellow fault illumination

FIGURE 34
Indoor Condensate Overflow Switch

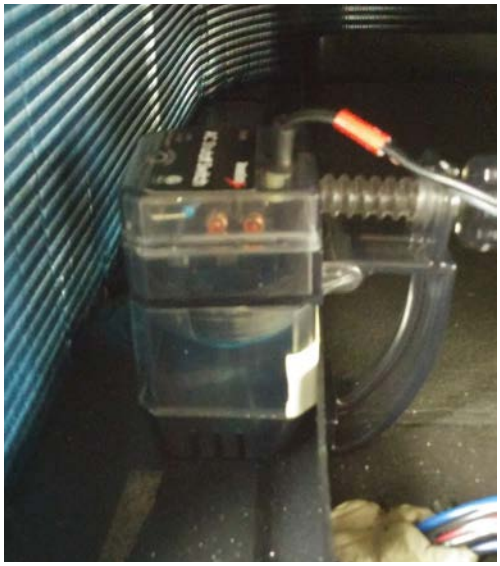

FIGURE 35
Outdoor Condensate Sensor

FIGURE 36
LED Fault Illumination

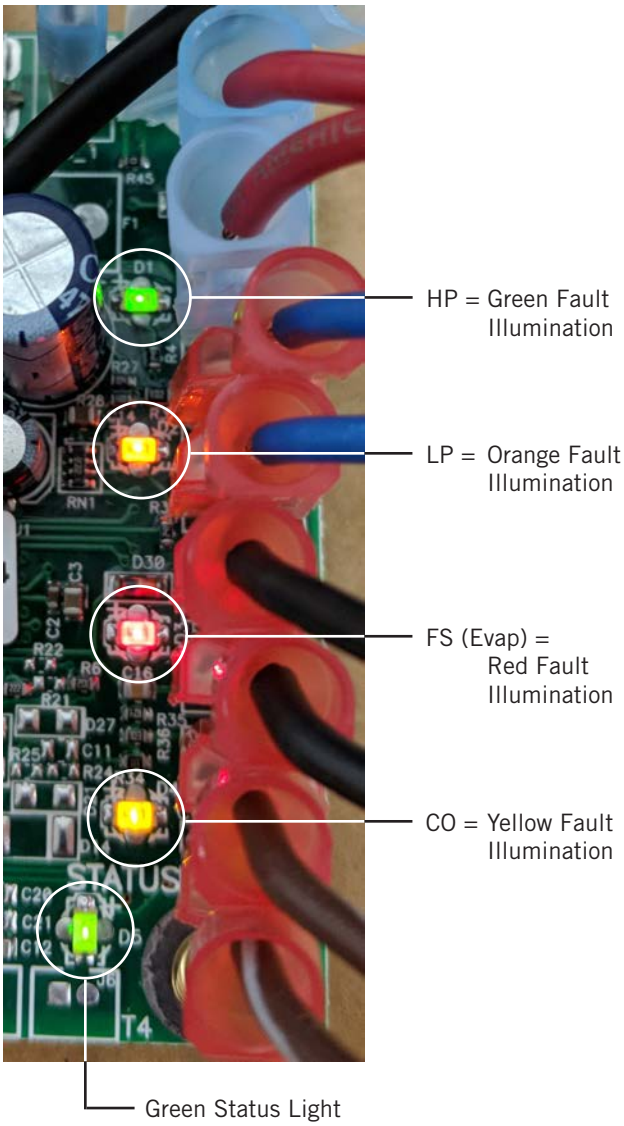

TROUBLESHOOTING ECM™ 142R OUTDOOR FAN MOTORS

⚠ WARNING

- ***Exposed moving parts.***
- ***Disconnect all electrical power before servicing.***
- ***Failure to do so can result in severe injury or amputation.***

⚠ WARNING

- ***Hazard of electrical shock.***
- ***Electrical shock can result in serious injury or death.***
- ***Disconnect the remote electric power supply or supplies before servicing.***

1. In normal operation, this motor may rock back and forth on start up. Do not replace if this is the only symptom identified.
2. If the system is operating properly, but the motor appears to run slower than it should, the motor is good. High efficiency systems with optimized fan blades are engineered to run slow to decrease noise. The Bard I-TEC Series models also adjust fan speed based upon varied outdoor ambient conditions to optimize sound and unit efficiency.
3. If the system is noisy, freezing up, running a high head pressure, tripping the high pressure switch or compressor overload, check the following:
   a. Ensure cleanliness of condenser coil(s) and fan blade/shroud.
   b. Confirm the fan blade is not bent or deformed, isn't rubbing on the shroud, and that it is tight on the motor shaft. Also ensure the motor is secure in its mounting system, and the mounting system is secure to the unit.
   c. The Bard I-TEC is equipped with a low ambient control pressure switch. This pressure switch completes the 24VAC Common feed to the outdoor fan motor control in cooling mode. If this switch is defective, the outdoor air temperature is too cold to raise the head pressure to the 350# switch closing setpoint or the system charge is too low, this could be the cause of the issue.
   d. If motor is not running, go to next section.

⚠ CAUTION

Do not operate motor without fan blade attached. Such operations will cause the motor to oscillate up and down.

⚠ CAUTION

The correct motor that is a direct replacement for the failed motor must be obtained from the manufacturer.

USING THE WRONG MOTOR VOIDS ALL WARRANTIES AND MAY PRODUCE UNEXPECTED RESULTS.

4. If the motor does not appear to be running at the proper speed or does not shut off, refer to the next section for voltage checks to determine if the motor is getting the proper input signals.

   If the motor IS NOT receiving any communication, troubleshoot the communication issue using the diagnostic table for the fan logic control.

   a. This motor uses a 7-wire harness to control the motor.
      - Line power is connected as follows:
        "Red Wire" connects to "L1"
        "Black Wire" connects to "L2"
        "Green/Yellow Wire" connects to "Ground"
      - Control power is connected as follows: "Blue Wire" connects to "BR" terminal on the fan logic control board, and subsequently connects to 24VAC Common through the fan logic control board.* "Yellow Wire" connects to "Y" on the fan logic control board. "White Wire" connects to "W" on the fan logic control board. "Orange Wire" connects to "O" on the fan logic control board.

NOTE: *A combination of the "Yellow", "White" and "Orange" wires being energized (with 24V "R" signal) determines five different speeds the fan motor will operate at. The fan logic control board uses an outdoor thermistor sensor to determine the speed the fan should operate.*

* The common wire to the "BR" terminal is interrupted by the low ambient control. This will stop the condenser fan operation until liquid pressure reaches 350#.

TABLE 6
Troubleshooting ECM™ 142R Outdoor Fan Motor

Check line power to motor	Check between red and black wires for line power
	Verify ground by checking green eire to L1 and L2 line power
Check for 24VAC common signal to motor (against Transformer "R" Signal)	Check "BR" terminal of fan logic control board
	Check "Blue" fan lead on "Fan Relay Terminal" of "Fan Logic Control"
	** Is not energized in cooling mode until low ambient fan cycling control is closed by 325 PSIG refrigerant pressure. Above 65°F outdoors in cooling mode, the low ambient control is bypassed.
Check 24VAC "hot" outputs (to "Blue" on fan logic control) to motor. See the following tables based upon outdoor temperature and model of operation.	

Troubleshooting Fan Logic Control

Please reference the Thermistor Temperature/ Resistance Chart in this manual (Table 5 on page 46).

- GREEN STATUS LED – Blinks indicating there is a call for fan operation (simultaneous to call for compressor operation) and is normal.
- RED STATUS LIGHT (LA) – Is illuminated when low ambient control switch is in the closed position. (NOTE: This is not required in heat pump operation as the low ambient switch is bypassed in this mode of operation. Low ambient switch is also negated in cooling mode above 65°F outdoor temperature.)
- YELLOW STATUS LIGHT (B) – Is illuminated when there is a reversing valve call (for heat pump operation). (NOTE: As mentioned above, this mode of operation negates the low ambient fan cycling control.)

If the board is reading a fan temperature thermistor value of 3375Ω or less (equivalent to 125°F or an "open" sensor), the fan will operate at the highest speed setting (energizes "W" and "Y" outputs on the board).

If the board is reading a fan temperature value of 118,110Ω or greater (equivalent to -10°F or a "shorted" sensor), the fan will operate at the highest speed setting (energizes "W" and "Y" outputs on the board).

If the low ambient switch is open, the red light will not be illuminated and the "BR" terminal will show open. The "BR" terminal is the "24 volt common" switching output to the outdoor fan motor.

TABLE 7
Cooling Mode

O.D. Temp Sensor	24VAC Signals Between
Below 55°F	Orange to Blue
Between 56° - 69°F	White to Blue
Between 70° - 85°F	Yellow to Blue
Between 86° - 112°F	Orange and White to Blue
Above 112°F	White and Yellow to Blue

*If the output signals are not matching the specified temperature range, go to Table 6 and verify the thermistor output curve. If the motor **is** receiving proper communications and proper high voltage power, and is still not running, proceed with motor replacement. (When checking the resistance/temperature curve, don't forget about the optional 2.2k ohm fan control resistor assembly.)*

Replacing the Motor

This motor is replaced in one piece. The control cannot be replaced separately from the motor. Even if the control is remotely located, the replacement part will be a new control with harness and new motor.

Be sure to have the correct replacement motor from the manufacturer that is a direct replacement for the failed motor.

USING THE WRONG MOTOR VOIDS ALL PRODUCT WARRANTIES AND MAY PRODUCE UNEXPECTED RESULTS.

Always mount the replacement motor and control according to the manufacturers specifications using all required hardware to reduce vibration. Make sure all wires are free of the fan blade and not pinched in mountings or cabinet through points.

TROUBLESHOOTING ECM™ INDOOR BLOWER MOTORS

CAUTION:

Disconnect power from unit before removing or replacing connectors, or servicing motor. To avoid electric shock from the motor's capacitors, disconnect power and wait at least 5 minutes before opening motor.

Symptom	Cause/Procedure
Motor rocks slightly when starting	• This is normal start-up for ECM
Motor won't start • No movement	• Check blower turns by hand • Check power at motor • Check low voltage (24 Vac R to C) at motor • Check low voltage connections (G, Y, W, R, C) at motor • Check for unseated pins in connectors on motor harness • Test with a temporary jumper between R - G • Check motor for tight shaft • Perform motor/control replacement check • **Perform Moisture Check**
• Motor rocks, but won't start	• Check for loose or compliant motor mount • Make sure blower wheel is tight on shaft • Perform motor/control replacement check
Motor oscillates up & down while being tested off of blower	• It is normal for motor to oscillate with no load on shaft
Motor starts, but runs erratically • Varies up and down or intermittent	• Check line voltage for variation or "sag" • Check low voltage connections (G, Y, W, R, C) at motor, unseated pins in motor harness connectors • Check "Bk" for erratic CFM command (in variable-speed applications) • Check out system controls, Thermostat • **Perform Moisture Check**
• "Hunts" or "puffs" at high CFM (speed)	• Does removing panel or filter reduce "puffing"? - Reduce restriction - Reduce max airflow
• Stays at low CFM despite system call for cool or heat CFM	• Check low voltage (Thermostat) wires and connections • Verify fan is not in delay mode; wait until delay complete • "R" missing/not connected at motor • Perform motor/control replacement check
• Stays at high CFM	• "R" missing/not connected at motor • Is fan in delay mode? - wait until delay time complete • Perform motor/control replacement check
• Blower won't shut off	• Current leakage from controls into G, Y or W? Check for Triac switched thermostat or solid-state relay
Excessive noise	• Determine if it's air noise, cabinet, duct or motor noise; interview customer, if necessary
• Air noise	• High static creating high blower speed? - Is airflow set properly? - Does removing filter cause blower to slow down? Check filter - Use low-pressure drop filter - Check/correct duct restrictions

Symptom	Cause/Procedure
• Noisy blower or cabinet	• Check for loose blower housing, panels, etc. • High static creating high blower speed? - Check for air whistling through seams in ducts, cabinets or panels - Check for cabinet/duct deformation
• "Hunts" or "puffs" at high CFM (speed)	• Does removing panel or filter reduce "puffing"? - Reduce restriction - Reduce max. airflow
Evidence of Moisture	
• Motor failure or malfunction has occurred and moisture is present	• Replace motor and **Perform Moisture Check**
• Evidence of moisture present inside air mover	• **Perform Moisture Check**

Do	Don't
• Check out motor, controls, wiring and connections thoroughly before replacing motor	• Automatically assume the motor is bad.
• Orient connectors down so water can't get in - Install "drip loops"	• Locate connectors above 7 and 4 o'clock positions
• Use authorized motor and model #'s for replacement	• Replace one motor or control model # with another (unless an authorized replacement)
• Keep static pressure to a minimum: - Recommend high efficiency, low static filters - Recommend keeping filters clean. - Design ductwork for min. static, max. comfort - Look for and recommend ductwork improvement, where necessary	• Use high pressure drop filters some have ½" H2O drop! • Use restricted returns
• Size the equipment wisely	• Oversize system, then compensate with low airflow
• Check orientation before inserting motor connectors	• Plug in power connector backwards • Force plugs

Moisture Check

- Connectors are oriented "down" (or as recommended by equipment manufacturer)
- Arrange harness with "drip loop" under motor
- Is condensate drain plugged?
- Check for low airflow (too much latent capacity)
- Check for undercharged condition
- Check and plug leaks in return ducts, cabinet

Comfort Check

- Check proper airflow settings
- Low static pressure for lowest noise
- Set low continuous-fan CFM
- Use humidistat and 2-speed cooling units
- Use zoning controls designed for ECM that regulate CFM
- Thermostat in bad location?

Replacing ECM Control Module

To replace the control module for the GE variable-speed indoor blower motor you need to take the following steps:

1. You MUST have the correct replacement module. The controls are factory programmed for specific operating modes. Even though they look alike, different modules may have completely different functionality.

USING THE WRONG CONTROL MODULE VOIDS ALL PRODUCT WARRANTIES AND MAY PRODUCE UNEXPECTED RESULTS.

2. Begin by removing AC power from the unit being serviced. **DO NOT WORK ON THE MOTOR WITH AC POWER APPLIED.** To avoid electric shock from the motor's capacitors, disconnect power and wait at least 5 minutes before opening motor.

3. It is not necessary to remove the motor from the blower assembly, nor the blower assembly from the unit. Unplug the two cable connectors to the motor control assembly. There are latches on each connector. **DO NOT PULL ON THE WIRES.** The plugs remove easily when properly released.

4. Locate the screws that retain to the motor control bracket to the sheet metal of the unit and remove them. Remove two (2) nuts that retain the control to the bracket and then remove two (2) nuts that retain sheet metal motor control end plate. *Refer to Figure 37.*

5. Disconnect the three (3) wires interior of the motor control by using your thumb and forefinger squeezing the latch tab and the opposite side of the connector plug, gently pulling the connector. **DO NOT PULL ON THE WIRES, GRIP THE PLUG ONLY.** *Refer to Figure 37.*

6. The control module is now completely detached from the motor. Verify with a standard ohmmeter that the resistance from each motor lead (in the motor plug just removed) to the motor shell is >100K ohms. *Refer to Figure 38.* (Measure to unpainted motor end plate.) If any motor lead fails this test, do not proceed to install the control module. **THE MOTOR IS DEFECTIVE AND MUST BE REPLACED.** Installing the new control module will cause it to fail also.

7. Verify that the replacement control is correct for your application. Refer to the manufacturer's authorized replacement list. **USING THE WRONG CONTROL WILL RESULT IN IMPROPER OR NO BLOWER OPERATION.** Orient the control module so that the 3-wire motor plug can be inserted into the socket in the control. Carefully insert the plug and press it into the socket until it latches. **A SLIGHT CLICK WILL BE HEARD WHEN PROPERLY INSERTED.**

8. Reverse the steps #5, 4, 3 to reconnect the motor control to the motor wires, securing the motor control cover plate, mounting the control to the bracket, and mounting the motor control bracket back into the unit. **MAKE SURE THE ORIENTATION YOU SELECT FOR REPLACING THE CONTROL ASSURES THE CONTROL'S CABLE CONNECTORS WILL BE LOCATED DOWNWARD IN THE APPLICATION SO THAT WATER CANNOT RUN DOWN THE CABLES AND INTO THE CONTROL.** ***DO NOT OVERTIGHTEN THE BOLTS.***

9. Plug the 16-pin control plug into the motor. The plug is keyed. Make sure the connector is properly seated and latched.

10. Plug the 5-pin power connector into the motor. Even though the plug is keyed, **OBSERVE THE PROPER ORIENTATION. DO NOT FORCE THE CONNECTOR.** It plugs in very easily when properly oriented. **REVERSING THIS PLUG WILL CAUSE IMMEDIATE FAILURE OF THE CONTROL MODULE.**

11. Final installation check. Make sure the motor is installed as follows:
    a. Motor connectors should be oriented between the 4 o'clock and 8 o'clock positions when the control is positioned in its final location and orientation.
    b. Add a drip loop to the cables so that water cannot enter the motor by draining down the cables. *Refer to Figure 39.*

The installation is now complete. Reapply the AC power to the HVAC equipment and verify that the new motor control module is working properly. Follow the manufacturer's procedures for disposition of the old control module.

Figure 37
Control Disassembly

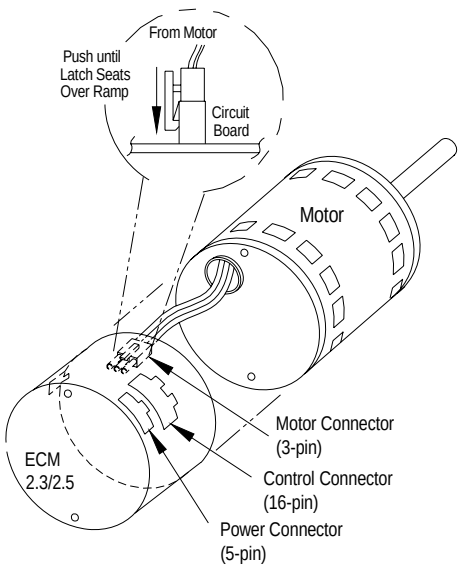

Figure 38
Winding Test

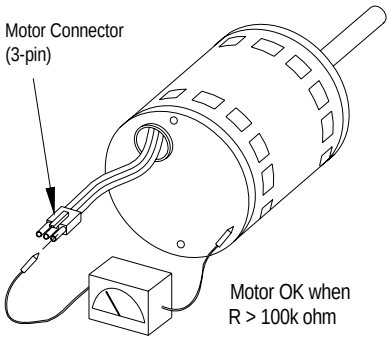

Figure 39
Drip Loop

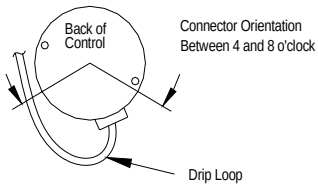

Troubleshooting ECM™ Blower Motors

MODE of OPERATION	OFF	Continuous Blower (Ventilation Mode)	Part Load Cooling	Full Load Cooling	Dehum. Mode (when equipped)	Part Load Heat Pump	Full Load Heat Pump	Heat Pump Full Load w/ 1st Bank of Elec. Heat	Heat Pump Full Load w/ 1st & 2nd Bank of Elec. Heat	Emergency Heat Mode
Thermostat 24 VAC Inuput Signals	—	"G"	"G", "Y1","Y2"	"G", "Y1","Y2"	"D"	"G", "B", "Y1"	"G", "B", "Y1", "Y2"	"G", "Y1", "Y2", "B", "W1"	"G", "Y1", "Y2", "B", "W2", "W3"	"G", "W2", "W3"
Pin #1	24 VAC "C" (Common) Signal, Always Energized									
Pin #2								X		
Pin #3	24 VAC "C" (Common) Signal, Always Energized									
Pin #4	Not Used									
Pin #5	Not Used									
Pin #6			X	X	X	X	X	X	X	
Pin #7	Not Used									
Pin #8	Not Used									
Pin #9						X	X	X		
Pin #10	Not Used									
Pin #11	Not Used									
Pin #12	24 VAC Hot "R" Signal, Always Energized									
Pin #13									X	X
Pin #14				X	X	X		X	X	
Pin #15		X	X	X	X	X	X	X	X	X
Pin #16	Not Used									

FIGURE 40

Control Connector Motor Half

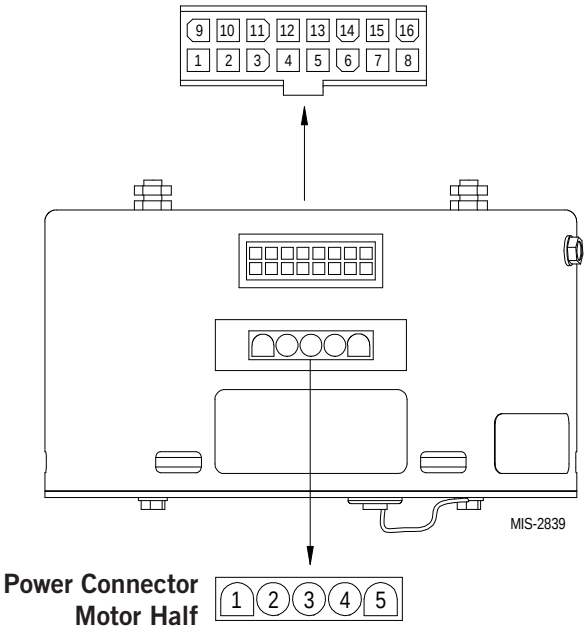

POWER CONNECTOR	
PWB HEADER	**AMP 1-350945-0**
PIN	Description
1	Jumper Pin 1 to Pin 2 for 120VAC Line Input Only **
2	
3	Chassis Ground
4	AC Line
5	AC Line

* Suggested mating connector
Housing — AMP 350809-1
Contact — AMP 350537-1

** **WARNING — Applying 240VAC line input with PIN 1 to PIN 2 jumper in place <u>will permanently damage unit!</u>**

FAN BLADE SETTING DIMENSIONS

The position of the fan blade should be set at 2.75", measuring from the motor mount to the closest point on the fan blade (as shown in Figure 41). Spin the blade by hand to make sure it does not hit the ring.

FIGURE 41
Fan Blade Position

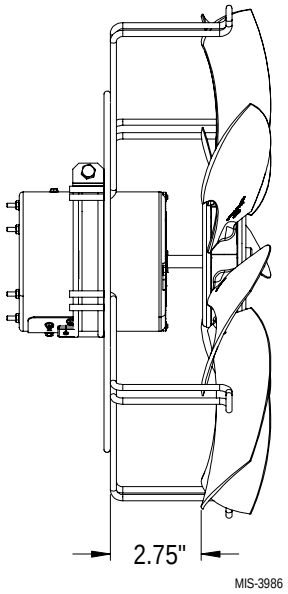

REFRIGERANT CHARGE

This unit was charged at the factory with the quantity of refrigerant listed on the serial plate. AHRI capacity and efficiency ratings were determined by testing with this refrigerant charge quantity. The pressure tables found on the following pages show nominal pressures and temperatures for the units. Since many installation specific situations can affect the pressure readings, this information should only be used by certified technicians as a guide for evaluating proper system performance. They shall not be used to adjust charge. If charge is in doubt, reclaim, evacuate and recharge the unit to the serial plate charge.

TABLE 8
Full Load Cooling Pressure/Temperature

Model	Return Air Temp.	Pressure	AIR TEMPERATURE ENTERING OUTDOOR COIL °F														
			55°	60°	65°	70°	75°	80°	85°	90°	95°	100°	105°	110°	115°	120°	125°
I30A1D	75° DB 62° WB	Low Side	117	118	120	121	123	124	126	128	129	130	132	133	135	136	137
		High Side	202	224	246	267	289	310	332	354	375	399	423	448	472	496	520
	80° DB 67° WB	Low Side	130	131	133	134	136	139	140	141	142	144	145	147	148	150	151
		High Side	201	225	248	271	294	315	345	362	386	411	436	461	486	510	535
	85° DB 72° WB	Low Side	145	146	148	149	151	152	154	156	157	159	160	162	164	165	167
		High Side	210	233	256	278	301	323	346	369	391	416	442	467	492	517	542
I36A1D	75° DB 62° WB	Low Side	126	127	129	130	131	132	134	135	136	137	138	139	141	142	143
		High Side	209	231	252	274	295	317	338	360	381	405	429	452	476	500	524
	80° DB 67° WB	Low Side	139	140	142	143	144	146	147	148	149	150	152	153	154	155	157
		High Side	208	231	254	277	300	327	358	370	392	417	441	466	490	515	539
	85° DB 72° WB	Low Side	154	155	157	158	159	160	162	163	164	165	167	168	170	171	172
		High Side	217	240	262	285	307	330	352	375	397	422	447	471	496	521	540
I42A1D	75° DB 62° WB	Low Side	122	123	125	127	128	130	131	133	134	135	136	137	138	139	140
		High Side	218	238	258	279	299	319	339	360	380	404	428	452	476	500	524
	80° DB 67° WB	Low Side	134	136	138	139	141	142	144	146	147	148	149	150	151	152	153
		High Side	217	239	260	282	304	326	355	369	391	416	440	465	490	514	539
	85° DB 72° WB	Low Side	139	140	142	143	144	145	147	148	149	150	151	152	153	154	155
		High Side	226	247	269	290	311	332	353	375	396	421	446	471	496	521	546
I48A1D	75° DB 62° WB	Low Side	125	126	127	128	129	129	130	131	132	134	135	136	138	139	140
		High Side	203	225	248	271	293	316	339	361	384	411	437	464	491	517	544
	80° DB 67° WB	Low Side	136	138	139	140	141	143	144	145	147	148	150	151	153	154	156
		High Side	208	231	254	276	299	321	351	367	390	417	444	471	498	526	553
	85° DB 72° WB	Low Side	148	149	151	153	154	156	158	159	161	162	164	166	167	169	171
		High Side	215	238	261	284	307	331	354	377	400	428	456	484	512	539	567
I60A1D	75° DB 62° WB	Low Side	123	124	124	125	126	127	128	129	129	131	132	133	134	135	136
		High Side	218	241	265	289	312	336	360	383	407	434	462	489	516	544	571
	80° DB 67° WB	Low Side	134	135	137	138	139	140	141	142	143	145	146	147	148	150	151
		High Side	224	248	271	295	319	341	373	389	413	441	469	497	524	552	580
	85° DB 72° WB	Low Side	146	147	148	150	151	153	154	156	157	159	160	161	163	164	166
		High Side	231	255	279	303	327	352	376	400	424	453	481	510	538	567	595

TABLE 9
Part Load Cooling Pressure/Temperature

Model	Return Air Temp.	Pressure	AIR TEMPERATURE ENTERING OUTDOOR COIL °F														
			55°	60°	65°	70°	75°	80°	85°	90°	95°	100°	105°	110°	115°	120°	125°
I30A1D	75° DB 62° WB	Low Side	127	128	129	129	130	131	132	133	134	135	137	138	140	141	143
		High Side	184	206	227	249	270	292	313	334	356	380	403	427	451	475	498
	80° DB 67° WB	Low Side	141	141	142	143	143	144	144	145	146	147	149	151	152	154	156
		High Side	187	209	231	252	274	293	322	338	361	385	409	433	457	481	505
	85° DB 72° WB	Low Side	154	154	155	156	156	157	157	158	159	161	162	164	166	168	170
		High Side	194	216	237	259	280	302	323	344	366	390	415	439	464	488	512
I36A1D	75° DB 62° WB	Low Side	131	133	134	136	137	139	140	142	143	144	145	146	148	149	150
		High Side	188	209	230	250	271	292	313	333	354	378	403	427	452	476	500
	80° DB 67° WB	Low Side	145	146	148	149	150	152	153	154	155	156	158	159	160	161	163
		High Side	191	212	233	254	275	295	323	338	359	384	409	433	458	483	508
	85° DB 72° WB	Low Side	158	159	161	162	163	164	166	167	168	169	171	172	173	175	176
		High Side	198	219	240	260	281	302	323	343	364	389	414	439	464	489	515
I42A1D	75° DB 62° WB	Low Side	126	128	130	132	134	136	138	139	141	142	143	144	145	146	147
		High Side	192	212	233	253	274	294	315	335	356	379	402	426	449	472	496
	80° DB 67° WB	Low Side	140	141	143	145	146	148	150	151	153	154	155	156	157	158	159
		High Side	195	216	236	257	278	299	326	340	361	384	408	432	455	479	503
	85° DB 72° WB	Low Side	144	145	147	148	150	151	152	154	155	156	157	158	159	160	161
		High Side	202	223	243	264	284	304	325	345	366	390	414	438	462	486	510
I48A1D	75° DB 62° WB	Low Side	129	130	131	132	133	133	134	135	136	137	139	140	142	143	144
		High Side	183	205	226	248	269	291	313	334	356	381	407	432	458	484	509
	80° DB 67° WB	Low Side	140	141	142	144	145	146	148	149	151	152	154	155	157	158	160
		High Side	187	209	230	252	274	295	324	339	361	387	413	439	465	491	517
	85° DB 72° WB	Low Side	154	155	157	158	160	161	162	164	165	167	168	170	172	173	175
		High Side	189	212	234	257	280	303	325	348	371	397	424	451	477	504	530
I60A1D	75° DB 62° WB	Low Side	127	127	128	128	129	130	130	131	131	133	134	135	136	137	139
		High Side	196	218	240	261	283	305	326	348	370	396	422	448	474	500	526
	80° DB 67° WB	Low Side	137	138	139	140	142	142	143	144	146	147	148	150	151	152	154
		High Side	200	222	244	266	288	310	339	353	375	402	428	454	481	507	534
	85° DB 72° WB	Low Side	152	153	153	154	155	156	157	158	159	161	162	164	165	167	168
		High Side	203	226	249	271	294	317	340	363	385	412	440	467	494	521	548