INSTALLATION INSTRUCTIONS

Q-TEC™ SERIES
PACKAGED HEAT PUMP

Models:

Q24H2-A	Q30H2-A	Q36H2-A	Q42H2-A	Q48H2-A	Q60H2-A
Q24H2-B	Q30H2-B	Q36H2-B	Q42H2-B	Q48H2-B	Q60H2-B
Q24H2-C	Q30H2-C	Q36H2-C	Q42H2-C	Q48H2-C	Q60H2-C

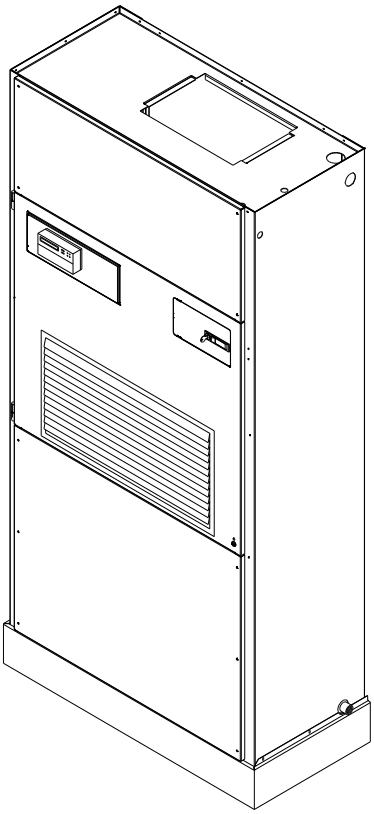

MIS-1554

Climate Control Solutions

Bard Manufacturing Company, Inc.
Bryan, Ohio 43506
www.bardhvac.com

Manual No.: 2100-601D
Supersedes: 2100-601C
Date: 8-3-16

CONTENTS

Getting Other Information and Publications
For more information, contact these publishers: 3

Q-TEC General Information
Q-TEC Model Nomenclature 4
Shipping Damage 7
Unit Removal from Skid 7
Handling Unit after Removal from Skid 8
General 8
Minimum Installation Height 8
Duct Work..... 10
Filters 10
Fresh Air Intake 11
Service Light..... 11
Condensate Drain 11
Optional Rear Drain Kits 11

Installation
Mounting the Unit 18
Wiring – Main Power 19
Wiring – Low Voltage Wiring..... 19
Optional Climate Controls Sequence of Operation 19
Low Voltage Connections..... 20

Figures
Figure 1 Unit Dimensions.....6
Figure 2 Air Seal on Bottom of Unit.....7
Figure 3 Removal of Unit from Skid.....7
Figure 4 Unit on Appliance Cart for Moving.....8
Figure 5 Installation With Duct-Free Plenum 9
Figure 6 Ducted Application 9
Figure 7 Supply Duct Connections.....10
Figure 8 Filter Location 10
Figure 9 Optional Side Drain.....12
Figure 10 Standard Rear Drain 12
Figure 11 Rear Drain (Top View) 12
Figure 12A Optional Rear Drain Kit 13
Figure 12B Optional Rear Drain Kit 14
Figure 12C Optional Rear Drain Kit 15
Figure 12D Optional Rear Drain Kit 16
Figure 13A Unit Mounting – Method 1.....17
Figure 13B Unit Mounting – Method 2.....17
Figure 14 Removing Locking Screws from Wheels .18
Figure 15 Component Location 19
Figure 16 Thermostat Plug Terminals 21
Figure 17A T-Stat Wiring Diagram "X" Opt. 22
Figure 17B T-Stat Wiring Diagram "X" Opt. w/Demand.23
Figure 18 T-Stat Wiring Diagram "D" Opt. 24
Figure 19 T-Stat Wiring Diagram "H" Option.....25
Figure 20 T-Stat Wiring Diagram "B" or "C" Opt. ..26
Figure 21 Fresh Air Damper Removal 31
Figure 22 QERV Removal 32
Figure 23 CO_2 Controller 33
Figure 24 Defrost Control Board.....35
Figure 25 Control Disassembly.....39
Figure 26 Winding Test.....39
Figure 27 Drip Loop.....39
Figure 28 Fan Blade Setting.....40

Start Up
R-410A Refrigerant Required 27
Topping Off System Charge 27
Safety Practices 27
Description of Standard Equipment..... 28
Optional CFM (Q36, Q42, Q48 & Q60 Only) 28
Important Installer Note..... 28
Phase Monitor..... 28
Three Phase Scroll Compressor Start Up Info. 28
Service Hints 29
Mist Eliminator Service..... 29
Vent Options 30
Sequence of Operation..... 33
Pressure Service Ports 34
Defrost Cycle 34

Troubleshooting
Solid State HP Control Troubleshooting Procedure 36
Checking Temperature Sensor.....37
Troubleshooting ECM™ Blower Motors 38
Fan Blade Setting Dimensions.....40
Refrigerant Charge.....40
Pressure Charts.....41

Tables
Table 1 Factory Built-In Electric Heat Table.....4
Table 2 Electrical Specifications.....5
Table 3 Operating Voltage Range 19
Table 4 Wall Thermostats 21
Table 5 Troubleshooting.....36
Table 6 Temp. vs Resistance of Temp. Sensor.....37
Table 7 Fan Blade Dimension 40
Table 8 Indoor Blower Performance 40
Table 9 Cooling Pressure 41
Table 10 Heating Pressure.....42

GETTING OTHER INFORMATION AND PUBLICATIONS

These publications can help you install the air conditioner or heat pump. You can usually find these at your local library or purchase them directly from the publisher. Be sure to consult current edition of each standard.

National Electrical Code ..... ANSI/NFPA 70

Standard for the Installation ..... ANSI/NFPA 90A
of Air Conditioning and Ventilating Systems

Standard for Warm Air..... ANSI/NFPA 90B
Heating and Air Conditioning Systems

Load Calculation for ..... ACCA Manual J or
Winter and Summer Manual N
Air Conditioning

Low Pressure, Low Velocity ..... ACCA Manual D or
Duct System Design Manual Q
Winter and Summer Air Conditioning

FOR MORE INFORMATION, CONTACT THESE PUBLISHERS:

ACCA **Air Conditioning Contractors of America**
1712 New Hampshire Avenue
Washington, DC 20009
Telephone: (202) 483-9370
Fax: (202) 234-4721

ANSI **American National Standards Institute**
11 West Street, 13th Floor
New York, NY 10036
Telephone: (212) 642-4900
Fax: (212) 302-1286

ASHRAE **American Society of Heating, Refrigeration, and Air Conditioning Engineers, Inc.**
1791 Tullie Circle, N.E.
Atlanta, GA 30329-2305
Telephone: (404) 636-8400
Fax: (404) 321-5478

NFPA **National Fire Protection Association**
Batterymarch Park
P.O. Box 9101
Quincy, MA 02269-9901
Telephone: (800) 344-3555
Fax: (617) 984-7057

Q-TEC™ MODEL NOMENCLATURE

Q 36 H 2 – A 10 X X V X X X

MODEL NUMBER
Q-TEC™

CAPACITY
24 – 2 Ton
30 – 2½ Ton
36 – 3 Ton
42 – 3½ Ton
48 – 4 Ton
60 – 5 Ton

HEAT PUMP

REVISION

VOLTS & PHASE
A – 230/208/60/1
B – 230/208/60/3
C – 460/60/3

KW
0Z – 0KW
05 – 5KW
06 – 6KW
09 – 9KW
10 – 10KW
12 – 12KW
15 – 15KW

VENTILATION OPTIONS
X – Barometric Fresh Air Damper (Standard)
B – Blank-off Plate
V – Commercial Ventilator – Motorized w/Exhaust Spring Return
P – Commercial Ventilator – Motorized w/Exhaust Power Return
R – Energy Recovery Ventilator w/Exhaust

FILTER OPTIONS
X – 1-Inch Fiberglass (Standard)
F – 2-Inch Fiberglass
P – 2-Inch Pleated

COLOR OPTIONS
V – Platinum w/Slate Front (Vinyl)
X – Beige paint
4 – Gray paint

CLIMATE CONTROL OPTIONS
X – None
D – Electronic/Prog/Man/Auto
H – Electronic/Prog/Man/Auto with CO_2
B – Electronic/Prog/Humidistat/BACNet
C – Electronic/Prog/Humidistat/BACNet/CO_2

INTERNAL CONTROLS
X – Standard
- High Pressure Switch
- Low Pressure Switch
- Compressor Time Delay

E – Low Ambient Control
Q – Outdoor Thermostat
R – Low Ambient Control & Outdoor Thermostat

COIL OPTIONS
X – Standard
1 – Phenolic coated evaporator*
2 – Phenolic coated condenser
3 – Phenolic coated evaporator and condenser coil*
*and reheat if applicable

TABLE 1
Factory Built-In Electric Heat Table
(See Table 2 for available electric heat by unit model)

Nominal KW	At 240V ①				At 208V ①				At 480V ②			At 460V ②		
	KW	1-Ph Amps	3-Ph Amps	BTUH	KW	1-Ph Amps	3-Ph Amps	BTUH	KW	3-Ph Amps	BTUH	KW	3-Ph Amps	BTUH
5.0	5.0	20.8		17,065	3.75	18.0		12,799						
6.0	6.0		14.4	20,478	4.50		12.5	15,359	6.0	7.2	20,478	5.52	6.9	18,840
9.0	9.0		21.7	30,717	6.75		18.7	23,038	9.0	10.8	30,717	8.28	10.4	28,260
10.0	10.0	41.7		34,130	7.50	36.1		25,598						
12.0	12.0		28.9	40,956	9.00		25.0	30,717	12.0	14.4	40,956	11.04	13.9	37,680
15.0	15.0	62.5	36.1	51,195	11.25	54.1	31.2	38,396	15.0	18.0	51,195	13.80	17.3	47,099

① These electric heaters are available in 230/208V units only.
② These electric heaters are available in 480V units only.

TABLE 2
Electrical Specifications

MODEL	Rated Volts & Phase	No. Field Power Circuits	Single Circuit				Dual Circuit							
			③ Minimum Circuit Ampacity	① Maximum External Fuse or Ckt. Brkr.	② Field Power Wire Size	② Ground Wire	③ Minimum Circuit Ampacity		① Maximum External Fuse or Ckt. Breaker		② Field Power Wire Size		② Ground Wire Size	
							Ckt. A	Ckt. B	Ckt. A	Ckt. B	Ckt. A	Ckt. B	Ckt. A	Ckt. B
Q24H2-A0Z	230/208-1	1	22	30	10	10								
A05		1	47	50	8	10								
A10		1 or 2	72	80	4	8	22	50	30	50	10	8	10	10
Q24H2-B0Z	230/208-3	1	17	20	12	12								
B06		1	35	35	8	10								
B09		1	44	45	8	10								
Q24H2-C0Z	460-3	1	10	15	14	14								
C06		1	19	20	12	12								
C09		1	23	25	10	10								
Q30H2-A0Z	230/208-1	1	25	35	8	10								
A05		1	50	50	8	10								
A10		1 or 2	75	80	4	8	25	50	30	50	10	8	10	10
Q30H2-B0Z	230/208-3	1	18	25	10	10								
B06		1	37	40	8	10								
B09		1	45	45	8	10								
B12		1	55	60	6	10								
Q30H2-C0Z	460-3	1	12	15	14	14								
C06		1	21	25	10	10								
C09		1	25	25	10	10								
C12		1	30	30	10	10								
Q36H2-A0Z	230/208-1	1	31	45	8	10								
A05		1	56	60	6	10								
A10		1 or 2	81	90	4	8	31	50	45	50	8	8	10	10
④ A15		1 or 2	83	90	4	8	33	50	45	50	8	8	10	10
Q36H2-B0Z	230/208-3	1	25	30	10	10								
B06		1	43	50	8	10								
B09		1	52	60	6	10								
⑤ B15		1	53	60	6	10								
Q36H2-C0Z	460-3	1	12	15	14	14								
C06		1	21	25	10	10								
C09		1	26	30	10	10								
⑤ C15		1	27	30	10	10								
Q42H2-A0Z	230/208-1	1	34	50	8	10								
A05		1	59	60	6	10								
A10		1 or 2	84	90	4	8	34	50	45	50	8	8	10	10
④ A15		1 or 2	84	90	4	8	34	50	45	50	8	8	10	10
Q42H2-B0Z	230/208-3	1	25	35	8	10								
B06		1	43	50	8	10								
B09		1	52	60	6	10								
⑤ B15		1	53	60	6	10								
Q42H2-C0Z	460-3	1	13	15	14	14								
C06		1	22	25	10	10								
C09		1	26	30	10	10								
⑤ C15		1	27	30	10	10								
Q48H2-A0Z	230/208-1	1	38	50	8	10								
A05		1 or 2	63	70	6	8	38	25	50	25	8	10	10	10
A10		1 or 2	88	90	3	8	38	50	50	50	8	8	10	10
④ A15		1 or 2	88	90	3	8	38	50	50	50	8	8	10	10
Q48H2-B0Z	230/208-3	1	29	40	8	10								
B06		1	47	50	8	10								
B09		1	56	60	6	10								
⑤ B15		1	56	60	6	10								
Q48H2-C0Z	460-3	1	15	20	12	12								
C06		1	24	25	10	10								
C09		1	28	30	10	10								
⑤ C15		1	28	30	10	10								
Q60H2-A0Z	230/208-1	1	45	60	8	10								
A05		1 or 2	70	90	4	8	45	25	60	25	8	10	10	10
A10		1 or 2	95	100	3	8	45	50	60	50	8	8	10	10
⑤ A15		1 or 2	95	100	3	8	45	50	60	50	8	8	10	10
Q60H2-B0Z	230/208-3	1	31	45	8	10								
B09		1	58	60	6	10								
⑤ B15		1	58	60	6	10								
Q60H2-C0Z	460-3	1	17	25	10	10								
C09		1	31	35	8	10								
⑤ C15		1	31	35	8	10								

① Maximum size of the time delay fuse or circuit breaker for protection of field wiring conductors.
② Based on 75°C copper wire. All wiring must conform to the National Electrical Code and all local codes.
③ These "Minimum Circuit Ampacity" values are to be used for sizing the field power conductors. Refer to the National Electric Code (latest revision), article 310 for power conductor sizing.

Caution: When more than one field power conductor circuit is run through one conduit, the conductors must be derated. Pay special attention to note 8 of table 310 regarding Ampacity Adjustment Factors when more than three conductors are in a raceway.

④ Maximum KW that can operate with heat pump on is 10KW. Other 5KW energizes during emergency heat only.
⑤ Maximum KW that can operate with heat pump on is 9KW. Other 6KW energizes during emergency heat only.

FIGURE 1
Unit Dimensions

DIMENSION CHART					
UNIT	DIM. A	DIM. B	DIM. C	DIM. D	DIM. E
Q24H2	7.625	42.000	30.000	30.000	43.000
Q30H2					
Q36H2					
Q42H2					
Q48H2	10.625	48.000	40.000	40.000	49.000
Q60H2					

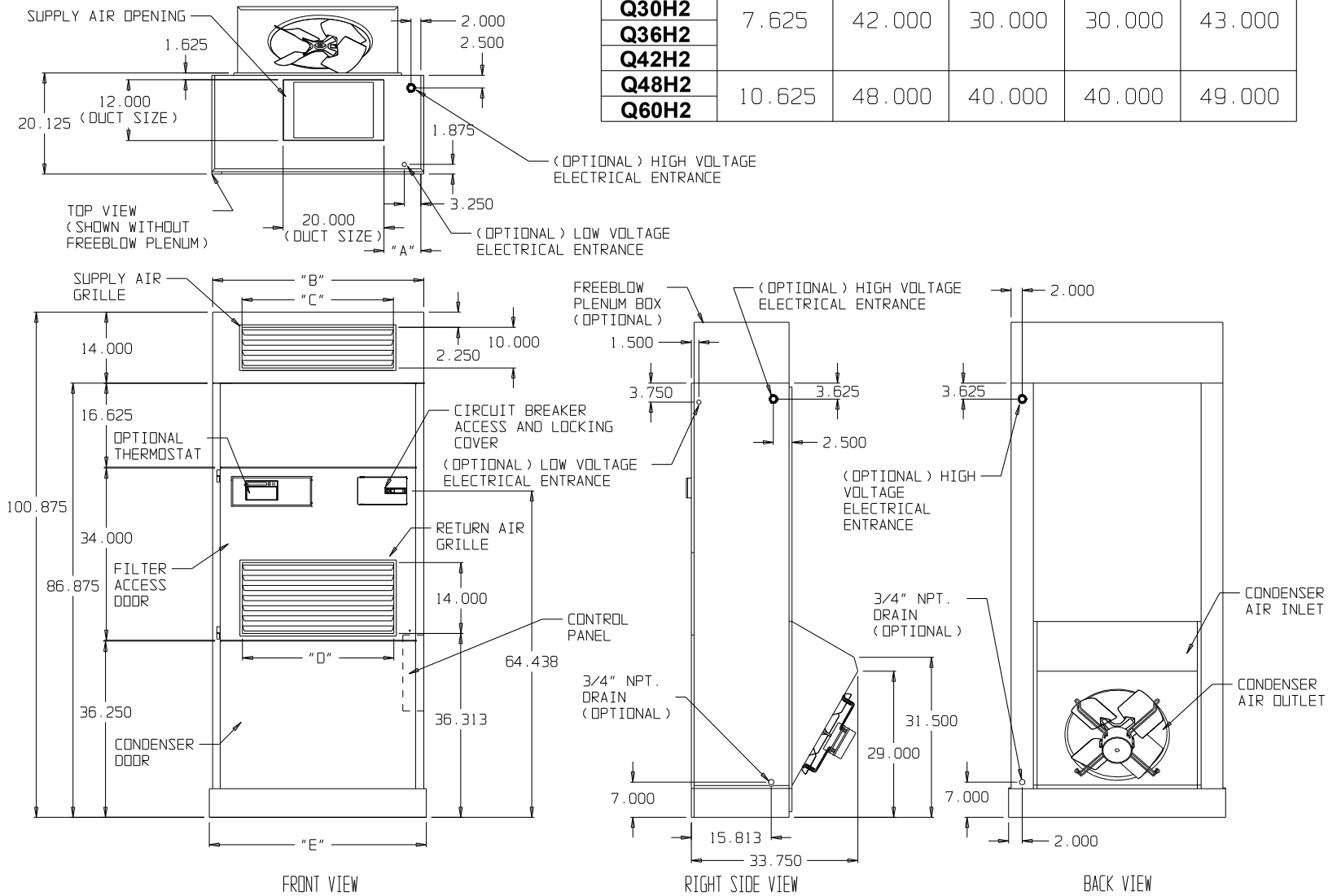

SHIPPING DAMAGE

Upon receipt of equipment, the carton should be checked for external signs of shipping damage. The skid must remain attached to the unit until the unit is ready for installation. If damage is found, the receiving party must contact the last carrier immediately, preferably in writing, requesting inspection by the carrier's agent.

UNIT REMOVAL FROM SKID

⚠ WARNING

This unit is heavy and requires more than one person to handle and remove from the skid. Check unit wheels to ensure that wheels are locked before removing from skid. Extreme caution must be taken to prevent injury to personnel and damage to the unit.

FIGURE 2
Air Sea Under Q-TEC Unit

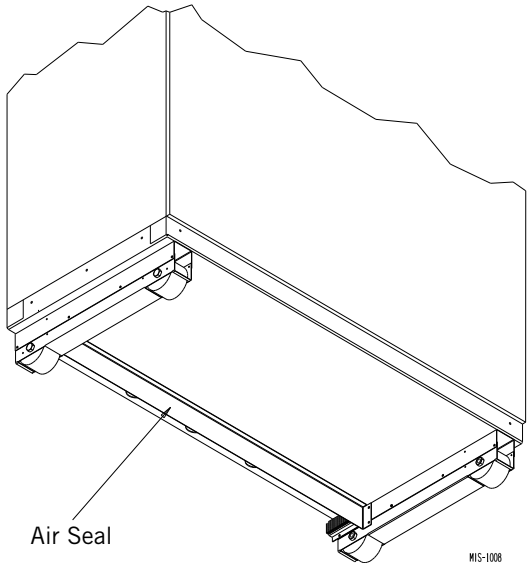

It is recommended that the unit not be removed from the skid with a forklift since the air seal under the unit could be damaged (see Figure 2).

The shipping brackets on each side of the unit must be removed and discarded (see Figure 3-A). The return air grille panel can be removed to provide a place to hold the unit. The unit can be slid forward on the skid until the front wheels hang over the edge of the skid (see Figure 3-B). The unit can be tipped forward and slid down the edge of the skid until the front wheels touch the ground (see Figure 3-C). The wheels will not roll. They are shipped from the factory locked so they will not roll. The back of the skid will have to be held down to keep it from tipping up. The skid can be slid out from under the unit. The unit can then be set upright.

FIGURE 3
Removal of Unit from Skid

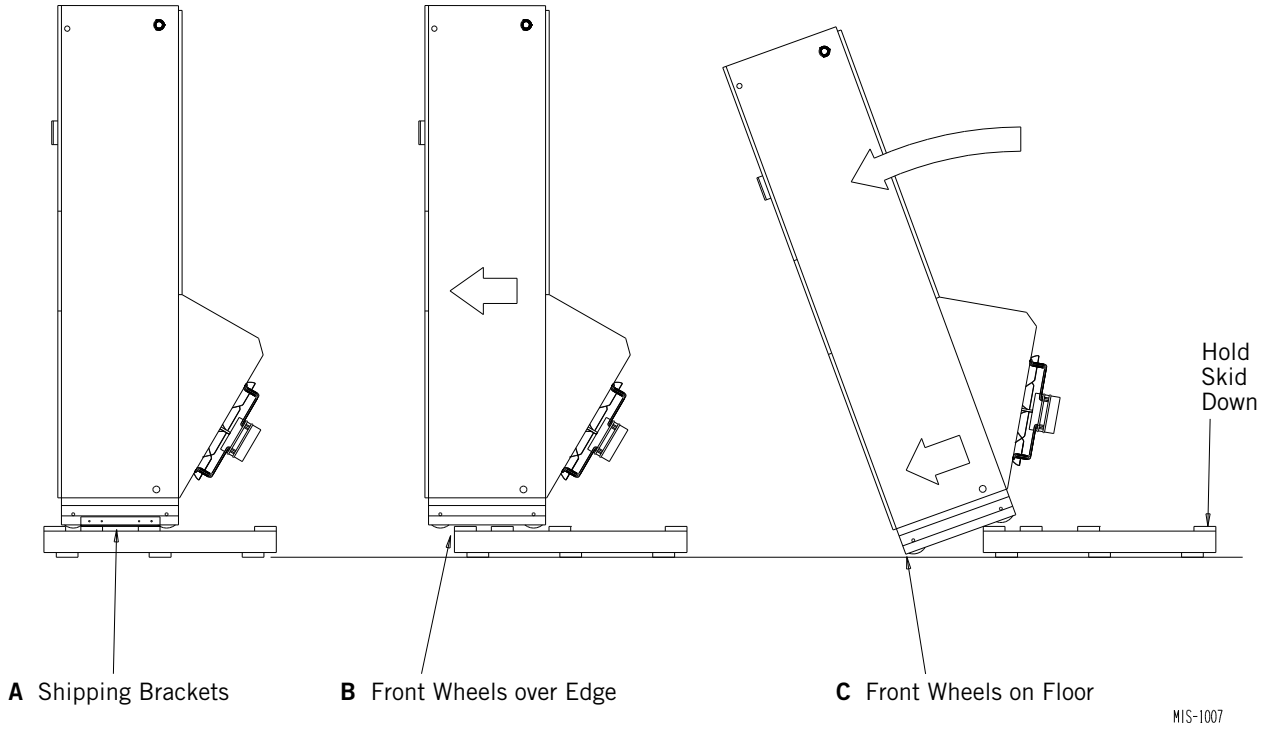

HANDLING UNIT AFTER REMOVAL FROM SKID

⚠ WARNING

Exercise extreme caution when pushing the unit on the rollers. Handle and push from the lower 1/3 of the unit. Insure that debris is not on the floor where the unit is to be moved on the rollers. Failure to do so could result in the unit tipping over and causing bodily injury and/or damage to the unit.

The unit will have to be turned sideways and removed from the skid to fit through a 36" doorway. If the door height allows, the unit can be slid sideways through the door.

If the unit cannot be slid through the door, then the unit will have to be put on a cart and tipped down to roll through the door. It is recommended that an appliance cart be used with a strap to hold the unit on the cart. The wheels of the unit ***must be locked***. If the wheels were allowed to roll, the unit could roll off the cart. ***The unit should always be carted from the left side***. This is the side where the compressor is located (see Figure 4). The blade of the appliance cart should be slid under the wheels of the unit. The strap of the appliance cart should be placed around the unit and strapped tightly. Help will be required to tip the unit back onto the cart. The unit can be leaned far enough back to be rolled through the door. Be careful when setting the unit back up to keep from damaging the unit.

FIGURE 4
Unit on Appliance Cart

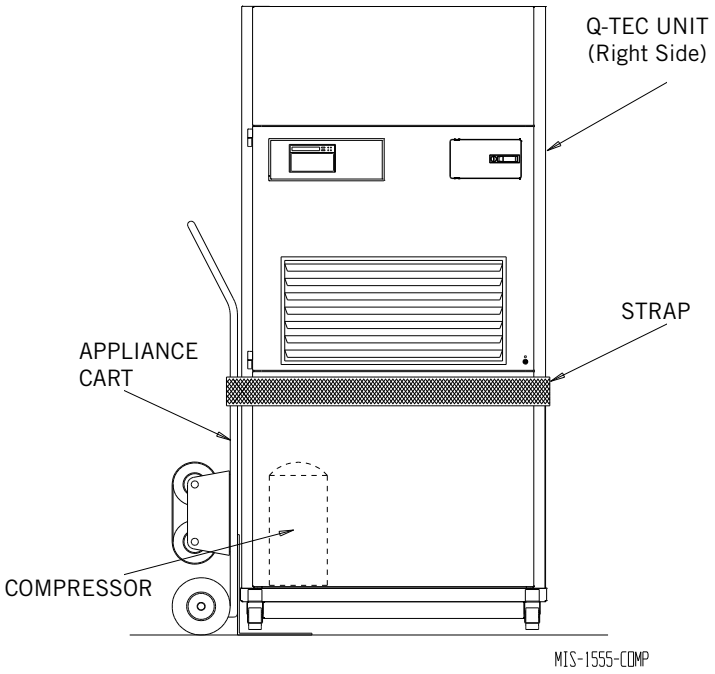

GENERAL

The equipment covered in this manual is to be installed by trained, experienced service and installation technicians.

A QWS-Series wall sleeve supplied as a separate accessory must be ordered and installed with Q-TEC unit.

The unit is designed for use with or without duct work. For use without duct work, Plenum Box QPB42 is recommended.

These instructions explain the recommended method to install the air cooled self-contained unit and the electrical wiring connections to the unit.

These instructions and any instructions packaged with any separate equipment required to make up the entire air conditioning system should be carefully read before beginning the installation. Note particularly “Start Procedure” and any tags and/or labels attached to the equipment.

While these instructions are intended as a general recommended guide, they do not supersede any national and/or local codes in any way. Authorities having jurisdiction should be consulted before the installation is made. See page 3 for information on codes and standards.

Size of unit for a proposed installation should be based on heat loss calculation made according to methods of Air Conditioning Contractors of America (ACCA). The air duct should be installed in accordance with the Standards of the National Fire Protection Systems of Other Than Residence Type, NFPA No. 90A, and Residence Type Warm Air Heating and Air Conditioning Systems, NFPA No. 90B. Where local regulations are at a variance with instructions, installer should adhere to local codes.

MINIMUM INSTALLATION HEIGHT

The minimum installation height of the unit with a Free Blow Plenum is 8 ft. 6 in. This provides enough clearance for the plenum to be removed (see Figure 5).

The minimum installation height for ducted applications is 8 ft. 4½ in. This provides enough clearance to install the duct work (see Figure 6).

FIGURE 5
Installation with Duct-Free Plenum

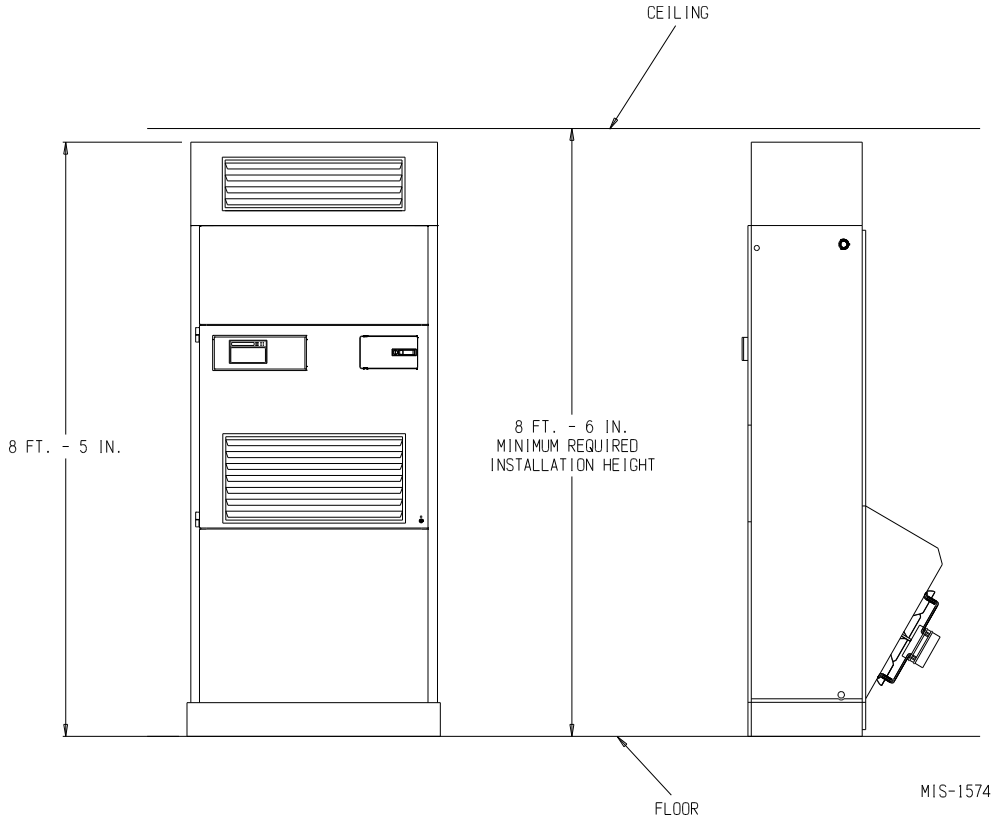

FIGURE 6
DUCTED APPLICATION

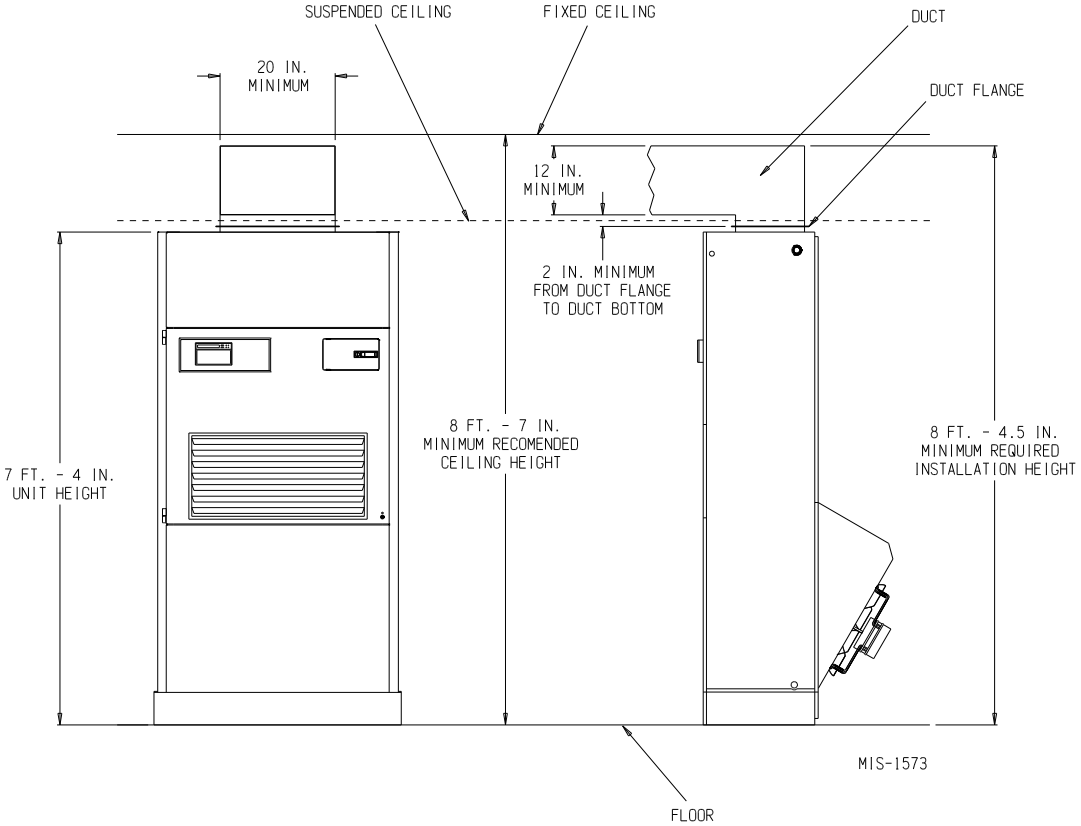

DUCT WORK

Any heat pump is more critical of proper operating charge and an adequate duct system than a straight air conditioning unit. All duct work must be properly sized for the design airflow requirement of the equipment. Air Conditioning Contractors of America (ACCA) is an excellent guide to proper sizing. All duct work or portions thereof not in the conditioned space should be properly insulated in order to both conserve energy and prevent condensation or moisture damage. When duct runs through unheated spaces, it should be insulated with a minimum of 1" of insulation. Use insulation with a vapor barrier on the outside of the insulation. Flexible joints should be used to connect the duct work to the equipment in order to keep the noise transmission to a minimum.

The Q-TEC series heat pump has provision to attach a supply air duct to the top of the unit. Duct connection size is 12" x 20". The duct work is field supplied and must be attached in a manner to allow for ease of removal when it becomes necessary to slide the unit out from the wall for service. See Figure 7 for suggested attachment method.

FIGURE 7
Supply Duct Connections

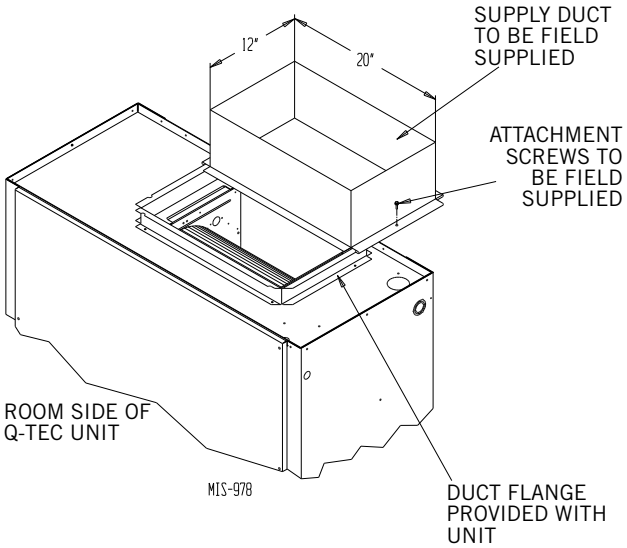

NOTE: Unit cabinet, supply air duct and duct free plenum are approved for "0" clearance to combustible material.

The Q-TEC series heat pumps are designed for use with free return (non-ducted) and either free blow with the use of QPB Plenum Box or a duct supply air system.

The QPB and QPBHW Plenum Box mounts on top of the unit and has both vertically and horizontally adjustable louvers on the front discharge grille.

For hot water coil option, a QPBHWxx-F for free blow or QPBHWxx-D for ducted airflow is used.

When used with a ducted supply, a QCX Cabinet Extension can be used to conceal the duct work above the unit to the ceiling. This extends 20" above the unit for a total height above the floor of 10'-7/8". The unit is equipped with a variable speed indoor blower motor which increases in speed with an increase in duct static pressure. The unit will therefore deliver proper rated air flow up to the maximum ESP shown in Table 9. However, for quiet operation of the air system, the duct static should be kept as low as practical, within the guidelines of good duct design.

FILTERS

Two 1" throw away filters [(1) 16x16 and (1) 16x20] are supplied with each unit. The filters slide into filter brackets (see Figure 8).

The filters are serviced from the inside of the building by opening the hinged door. This door is attached by T-25 torx screw and one locking latch.

The internal filter brackets are adjustable to accommodate 2" filters. The tabs for the 1" filters must be bent down to allow the 2" filters to slide in place.

FIGURE 8
Filter Location

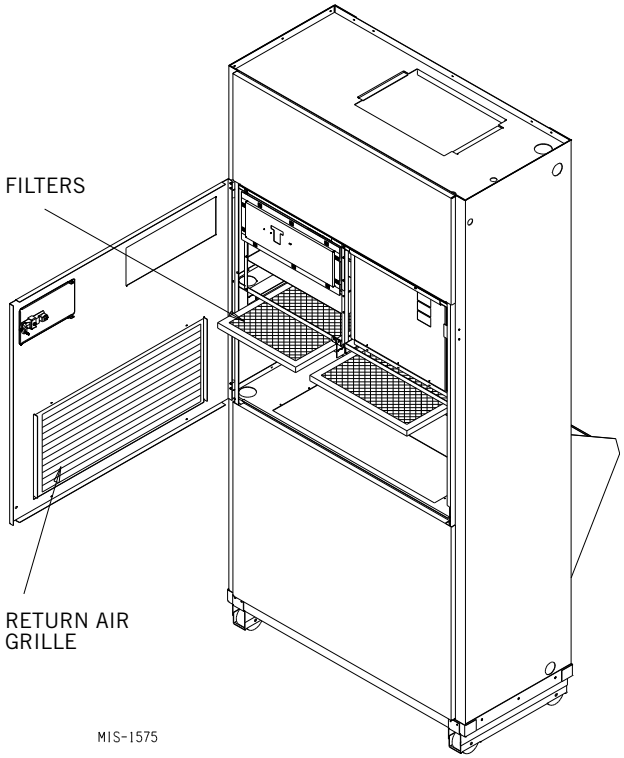

FRESH AIR INTAKE

This unit is equipped with a fresh air damper assembly. The damper blade is locked in the closed position when the unit is shipped from the factory. To allow the damper to operate remove the two plastic locking pins, one on each end of the blade. This will allow for maximum fresh airflow. The damper blade will now open when the indoor blower is operating. If less than maximum fresh airflow is required, reinsert the plastic pins to limit damper blade opening to desired level. Two extra pins are provided (taped to the inside of the assembly) which may be used to hold the blade in some position other than minimum or maximum position. This fresh air assembly is located in the rear of the unit and to gain access to make these adjustments remove the air filter service door.

All capacity, efficiency and cost of operation information as required for Department of Energy "Energyguide" Fact Sheets are based upon the fresh air blank-off plate in place and is recommended for maximum energy efficiency.

The blank-off plate is available upon request from the factory and is installed in place of the fresh air damper shipped with each unit.

For details on energy recovery ventilation see page 30.

SERVICE LIGHT

The unit is equipped with a service light which signals the user that service is required. The light is located in the upper control panel and is visible only when the hinged service/filter access door is open.

The ***Service Unit*** light indicates that the unit has been shut off by a high or low pressure device. This indicates that the unit needs to be serviced. See Sequence of Operation for details.

CONDENSATE DRAIN

There are two drain connections on the unit. The rear drain is the primary drain, and is located on the right lower rear panel of the unit. The optional side drain is located on the bottom right side of the unit. The side drain is shipped with a plug installed.

The ***side drain*** requires a water trap for proper drainage (see Figure 9). The drain can be routed through the floor or through the wall. ***If the drain is to be routed through an unconditioned space, it must be protected from freezing***. The drain line must be able to be removed from the unit if it is necessary to remove the unit from the wall. When the side drain is used, the plug must be removed and installed in the rear drain outlet.

The ***rear drain*** can be used with wall thickness of up to 10" where a water trap can be installed between the unit and the interior wall (see Figure 10). The trap cannot extend beyond the edge of the unit or it will interfere with the wall mounting bracket. The drain can be routed through the floor or through the wall. If the drain is routed through the wall, the drain line must be positioned such that it will not interfere with the sleeve flange or the grille (see Figure 11). ***If the drain is to be routed through an unconditioned space, it must be protected from freezing***.

OPTIONAL REAR DRAIN KITS

Optional Rear Drain Kit, Bard Model QCDS48A, is also available for these products. The optional rear drain kit offers multiple benefits that include the following:

- Allows unit to be rolled away from the sleeve without having to disconnect any hard plumbing connections.
- Allows indoor coil condensate to be easily connected to Rear Drain Box while bypassing the outdoor coil drain pan. This aids in minimizing the potential for biological growth to occur by minimizing the standing water and exposing it to warm temperatures.

See Figures 12A, 12B, 12C and 12D.

The drain box permanently mounts onto the wall sleeve and is then either piped directly outdoors, or can be piped vertically. The Q-TEC unit is then equipped with fittings on the rear of the unit that slide into the drain box as it is wheeled towards the wall sleeve.

NOTE: *Models equipped with a refrigerant subcooler in the lower drain pan may experience a 2-3% decrease in cooling performance and efficiency when the indoor condensate is routed around the outdoor coil drain pan/subcooler assembly. Unit rated performance and efficiency are with the indoor condensate routed to the outdoor coil pan.*

There is also a heated version of the rear drain box available (Model #QCDS48H) for installation in northern climates where freezing may occur.

FIGURE 9
Opitional Side Drain (Side View) Installation

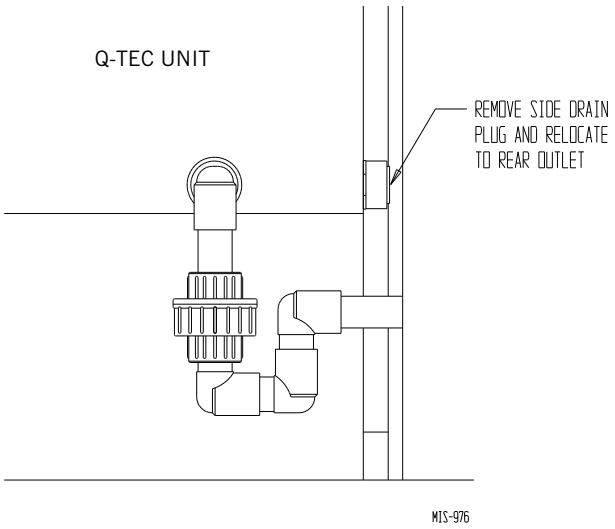

FIGURE 10
Standard Rear Drain

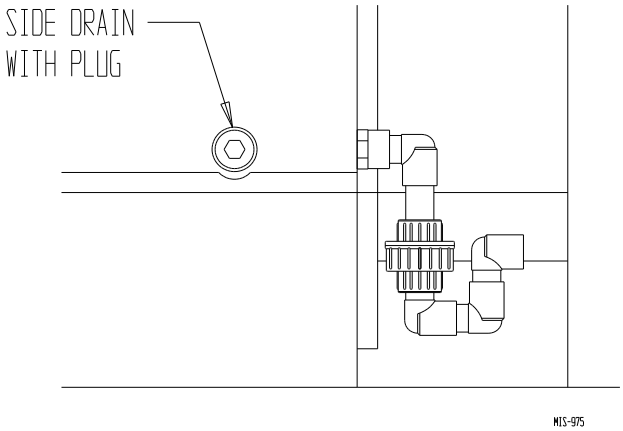

FIGURE 11
Rear Drain (Top View)

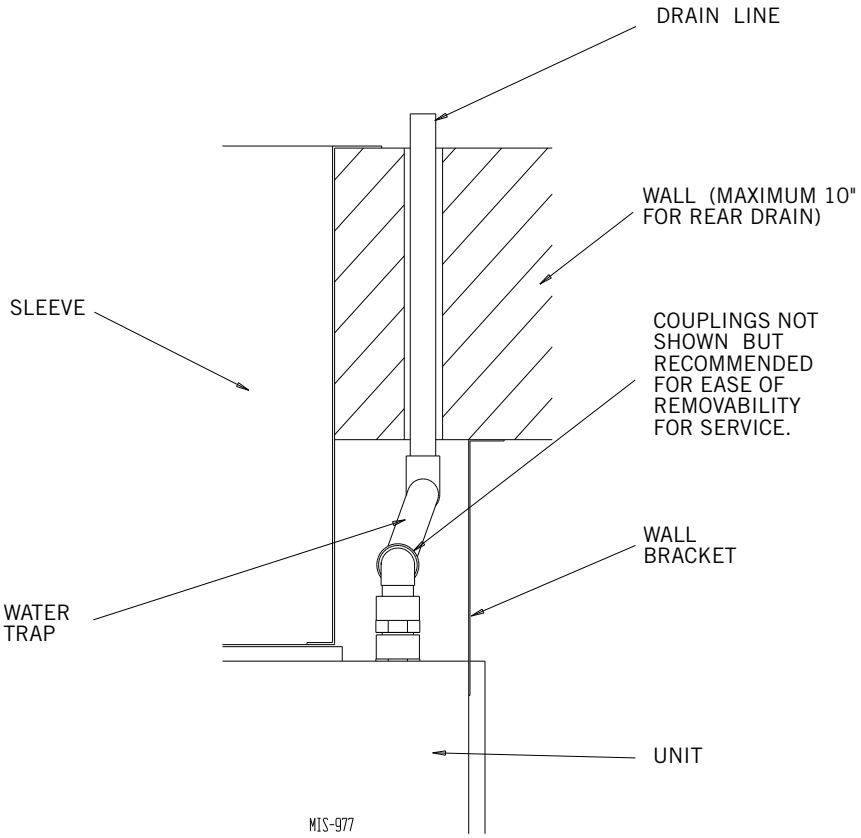

MIS-2469

FIGURE 12A

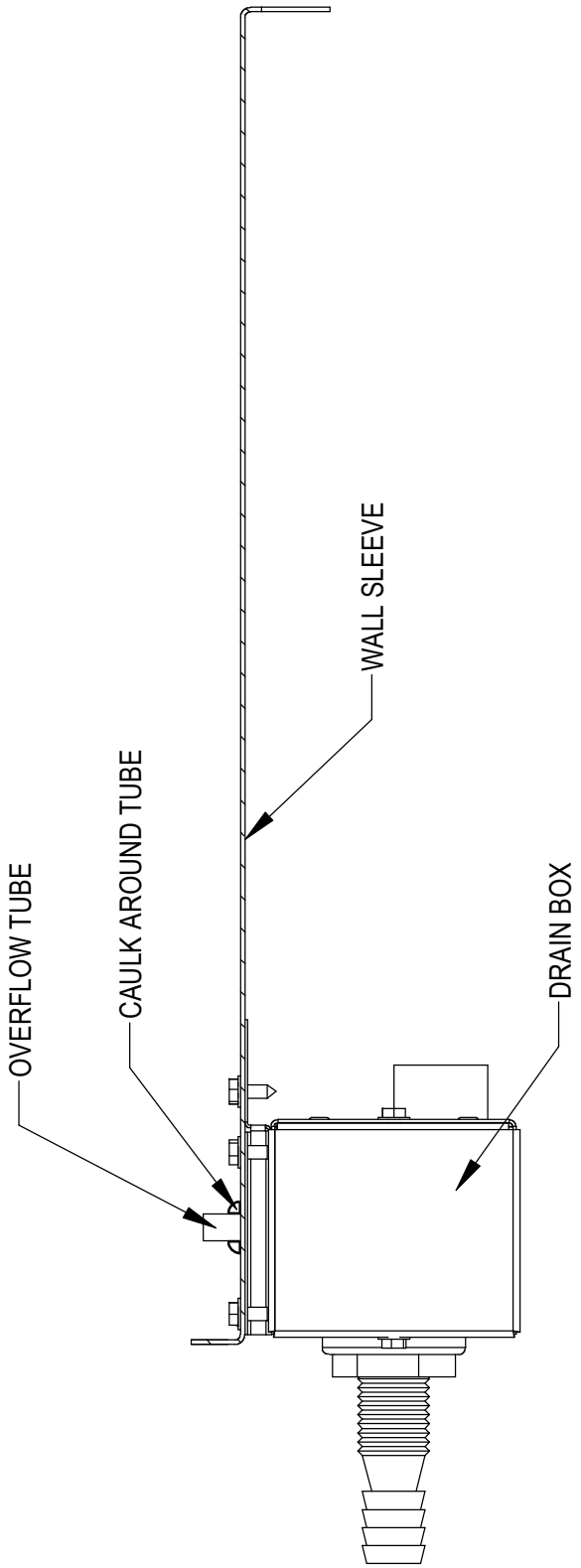

FIGURE 12B

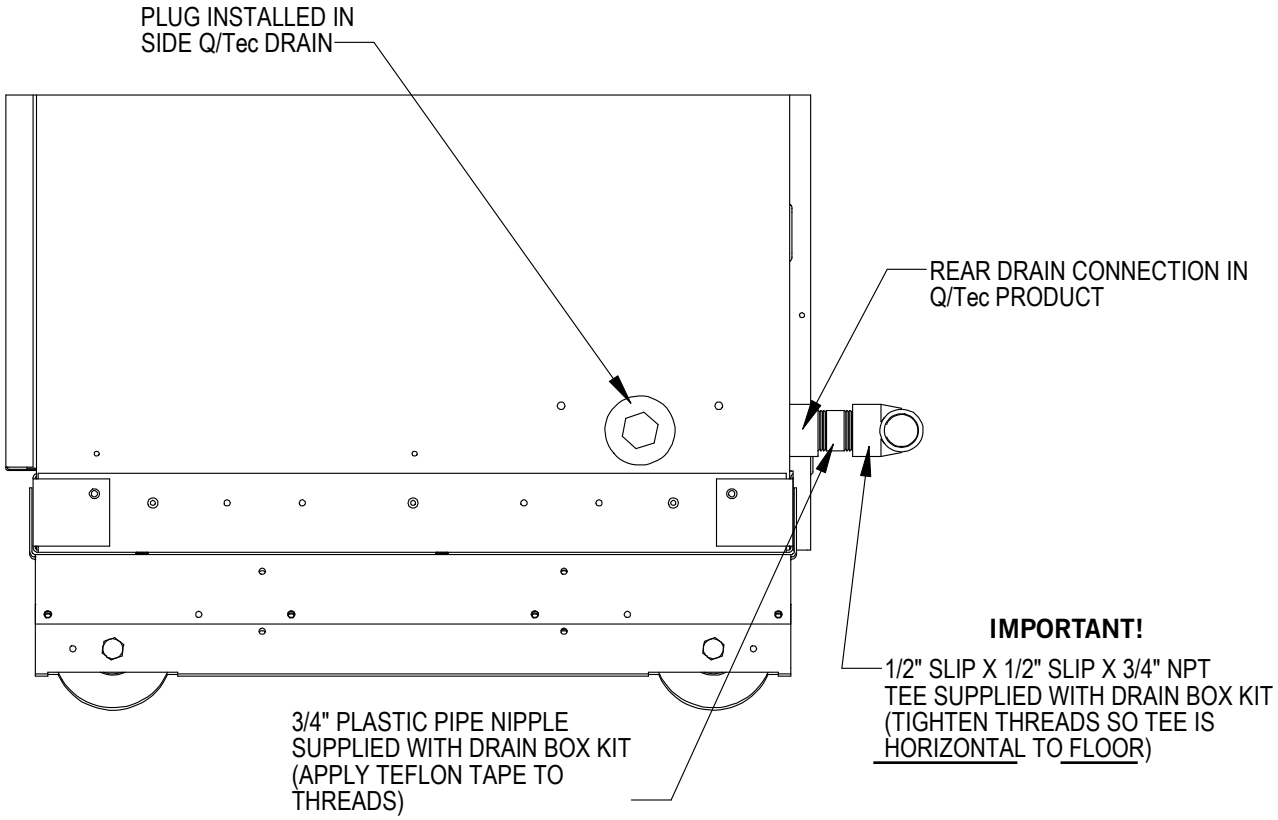

MIS-2470

FIGURE 12C

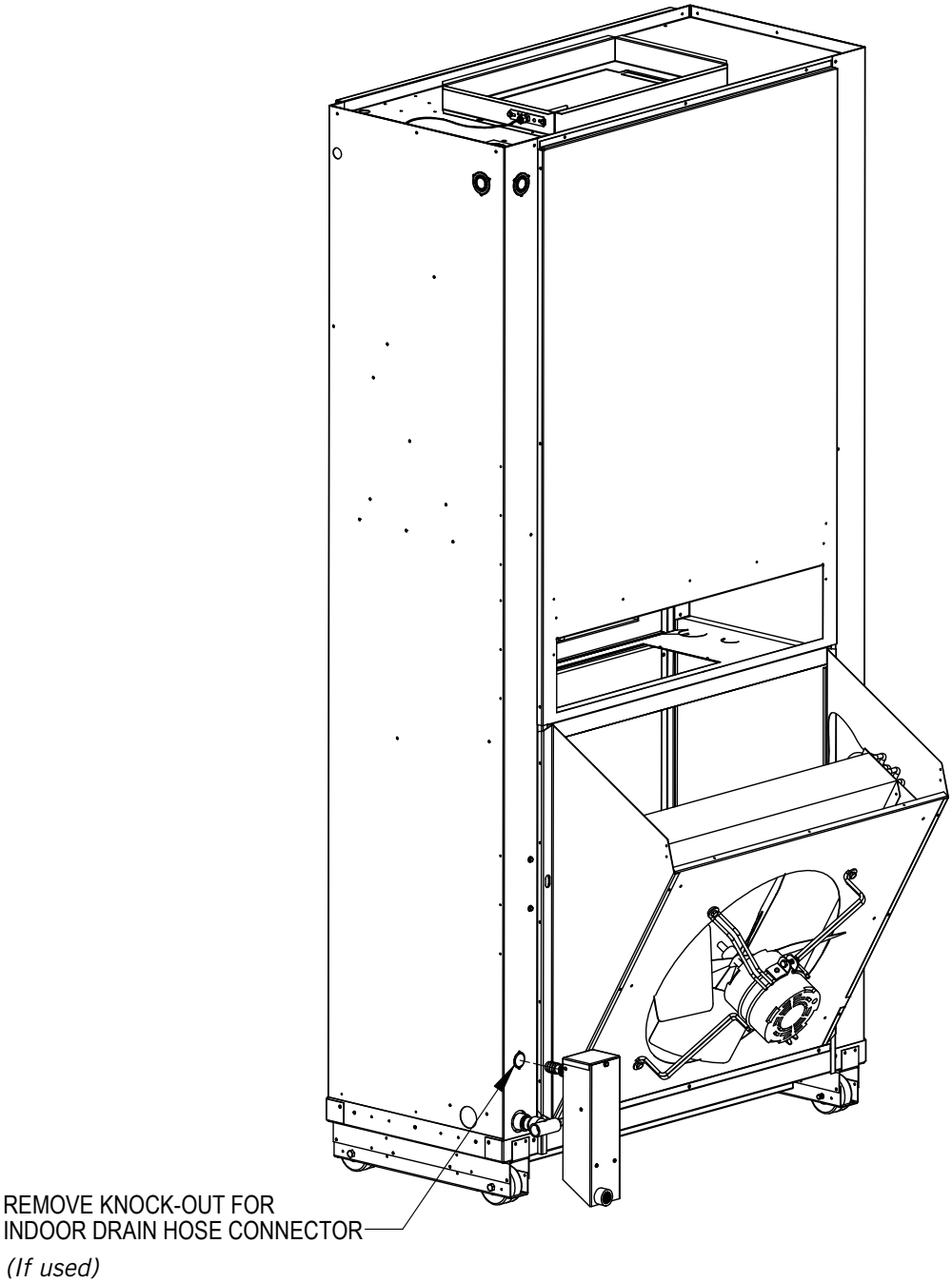

MIS-2471 A

FIGURE 12D

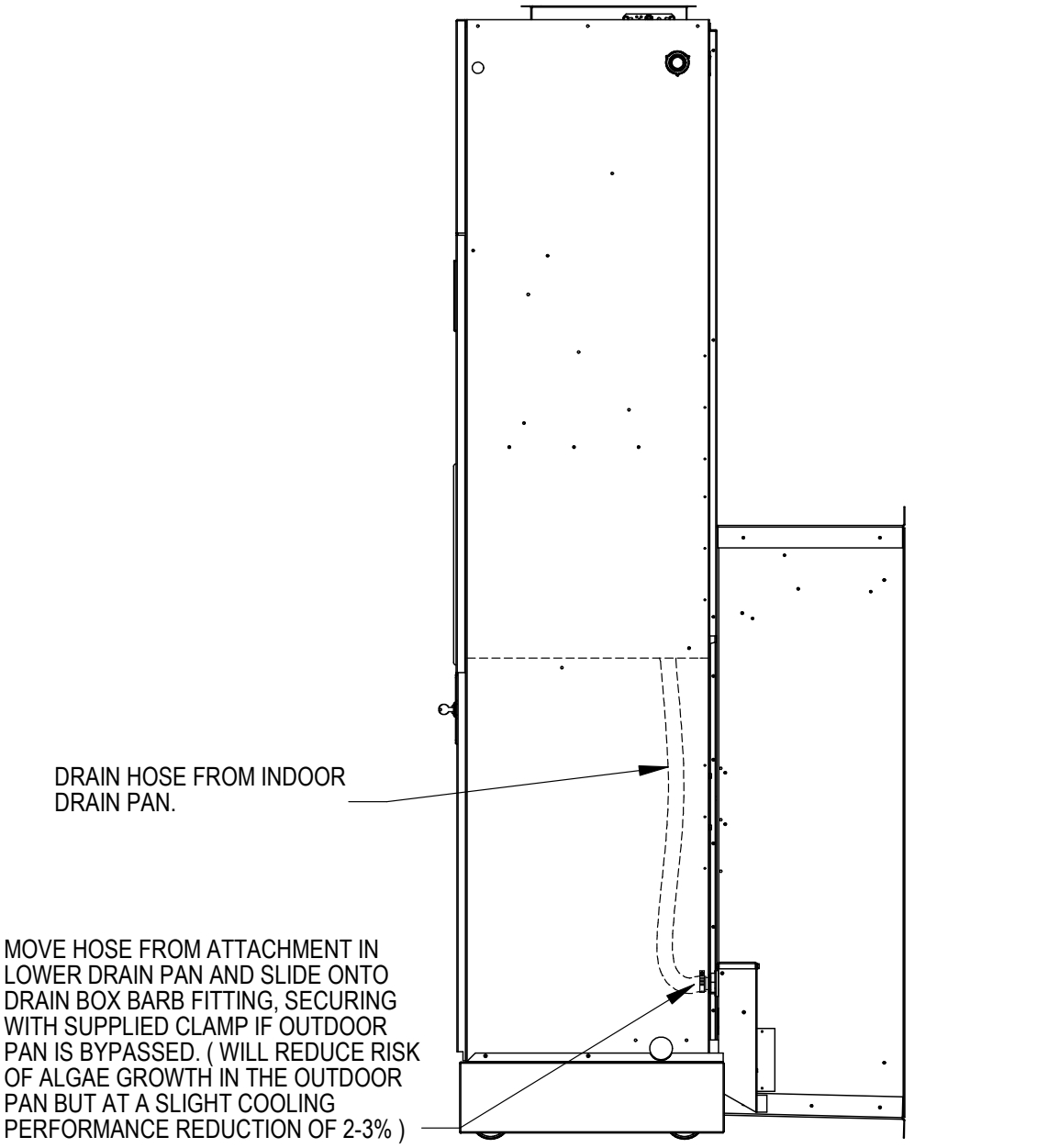

MIS-2472 A

FIGURE 13A
Unit Mounting – Method 1

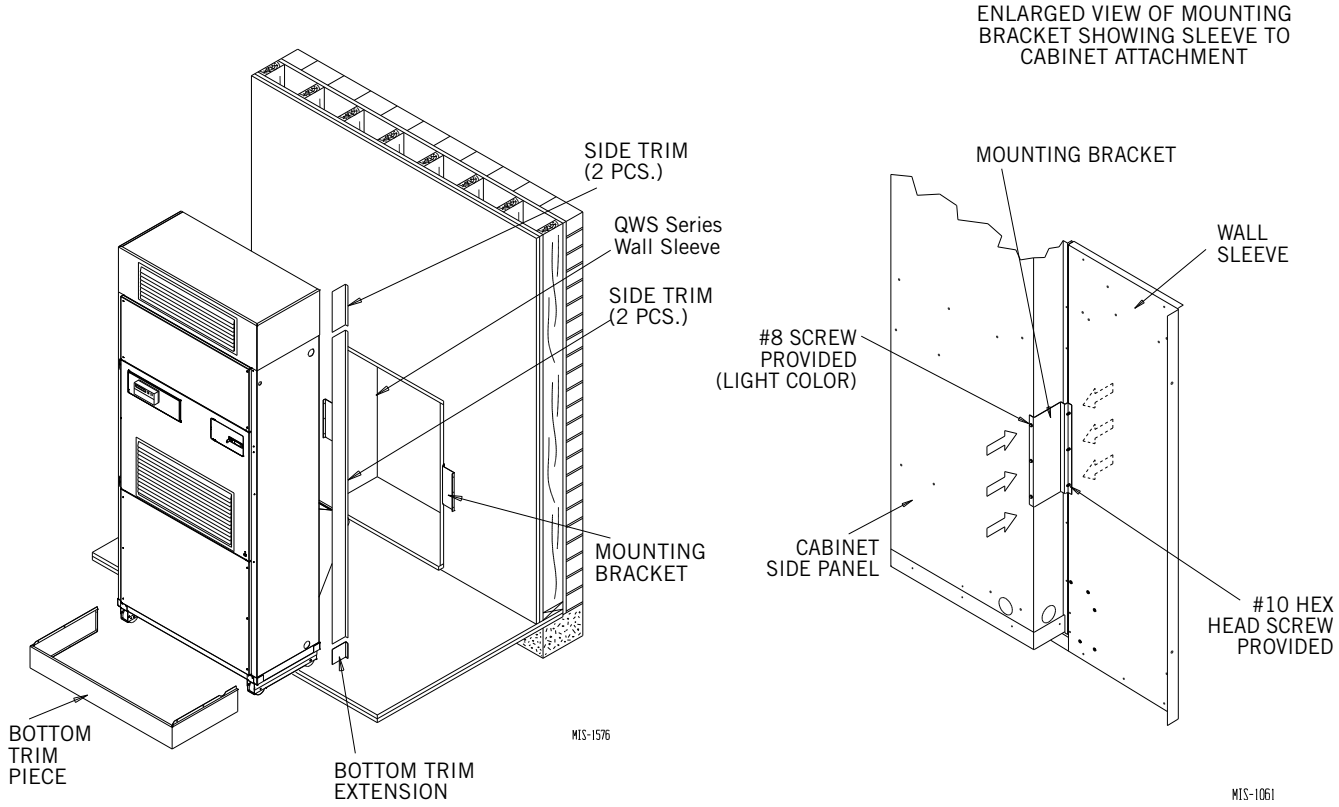

FIGURE 13B
Unit Mounting – Method 2

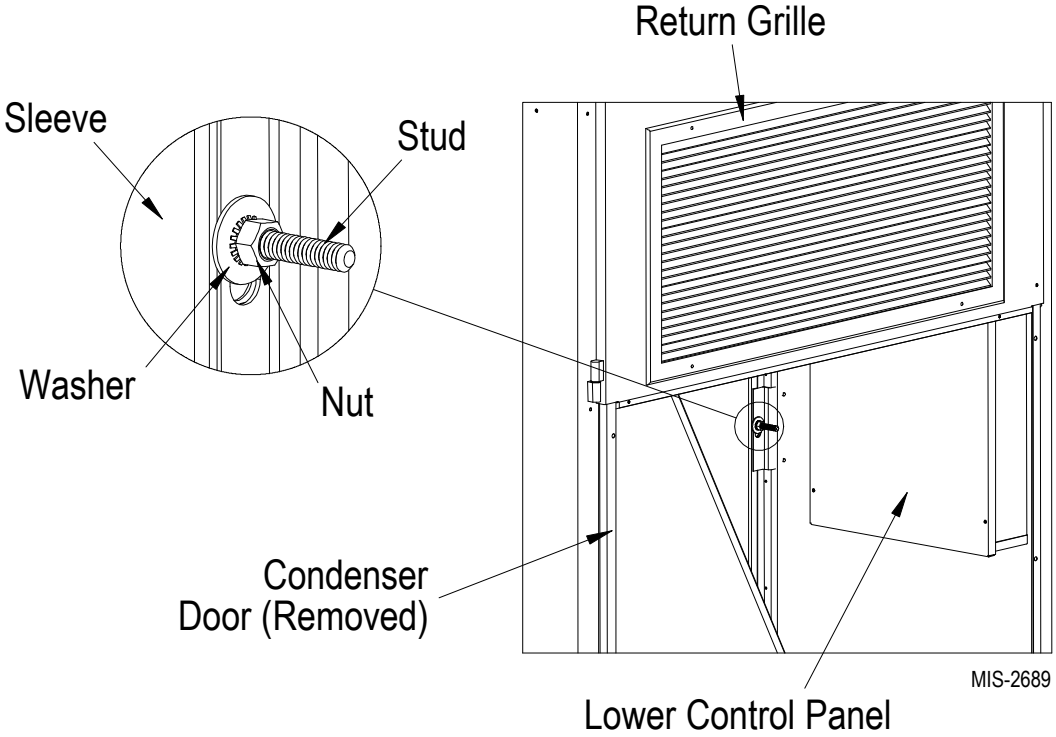

MOUNTING THE UNIT

When installing a Q-TEC unit near an interior wall on the left side, a minimum of 8" is required; 12" is preferred.

When installing a Q-TEC unit near an interior wall on the right side, a minimum of 18" is required as additional space is needed to connect the side drain. If rear condensate drain kit QCDS48 is used, the minimum can be reduced to 8".

This clearance is required to allow for the attachment of the unit to the sleeve and side trim pieces to the wall.

This unit is to be secured to the wall sleeve with mounting brackets provided. The unit itself, the supply duct and the free blow plenum are suitable of “0” clearance to combustible material.

Following are the steps for mounting the Q-TEC. For reference see Figure 13A for external mounting bracket or 13B for internal bolt secured bracket (recommended).

1. Attach mounting brackets to the wall sleeve with screws provided. Either use external mounting bracket (Fig. 13A) or internal bolt bracket (Fig. 13B).
2. Position the unit in front of the sleeve with the condenser section toward the sleeve.
3. Remove the locking screws from the wheels (see Figure 14).
4. Roll the unit into the sleeve. Make sure to check both sides of the unit as it is being rolled to keep it centered in the sleeve. Also check the alignment to the mounting brackets. This unit must be level from side to side. If adjustments are necessary, shim up under the rollers with sheets of steel or any substance that is not affected by moisture.
5. Make sure the gasket on the rear of the unit is touching the sleeve across the top and down both sides. This is a rain water seal.
6. Secure the mounting brackets to the unit with screws provided, #10 hex head sheet metal screws (Figure 13A) or use nut and washer to secure sleeve (Figure 13B).
7. Bottom trim extensions are provided for use when wall is less than 14" but greater than 10.5". Secure to wall with screws (not provided).
8. Attach the bottom trim piece to the unit with the screws provided (dark colored).
9. Position side trim pieces to wall and attach with field-supplied screws. There are two long pieces and two short pieces supplied. The long pieces are to enclose the gap behind the unit. The short pieces are to fill the gap behind the cabinet extension or the free blow plenum box. They may be cut to suit your ceiling height or overlap the unit side trim. There is sufficient length to trim up to a 10'2" ceiling.

NOTE: If the exterior wall thickness is between 5" and 10.5", a side trim extension piece kit, model QSTX42, is available.

FIGURE 14
Removing Locking Screws from Wheels

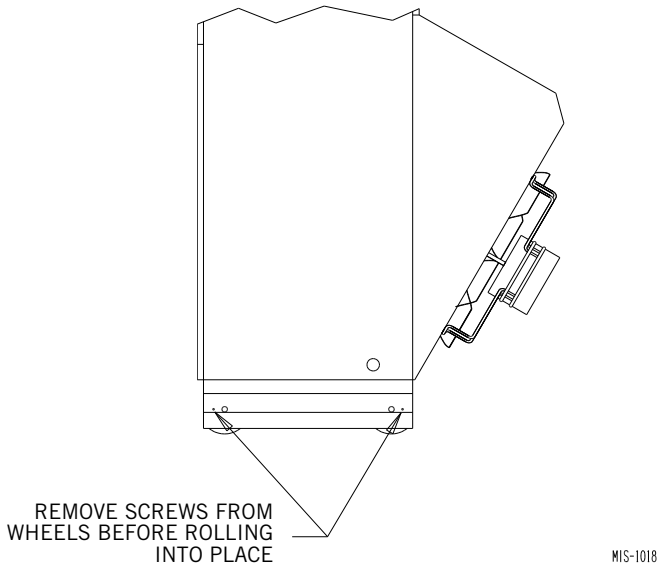

WIRING – MAIN POWER

Refer to the unit rating plate and/or Table 2 for wire sizing information and maximum fuse or circuit breaker size. Each unit is marked with a "Minimum Circuit Ampacity". This means that the field wiring used must be sized to carry that amount of current. Depending on the installed KW of electric heat, there may be two field power circuits required. If this is the case, the unit serial plate will so indicate. All models are suitable only for connection with copper wire. Each unit and/or wiring diagram will be marked "Use Copper Conductors Only". These instructions ***MUST BE*** adhered to. Refer to the National Electrical Code (NEC) for complete current carrying capacity data on the various insulation grades of wiring material. All wiring must conform to NEC and all local codes.

The electrical data lists fuse and wire sizes (75°C copper) for all models, including the most commonly used heater sizes. Also shown are the number of field power circuits required for the various models with heaters.

The unit rating plate lists a "Maximum Time Delay Relay Fuse" or circuit breaker that is to be used with the equipment. The correct size must be used for proper circuit protection and also to assure that there will be no nuisance tripping due to the momentary high starting current of the compressor motor.

The disconnect access door on this unit may be locked to prevent unauthorized access to the disconnect.

See Start Up section for information on three phase scroll compressor start-ups.

FIGURE 15
Component Location

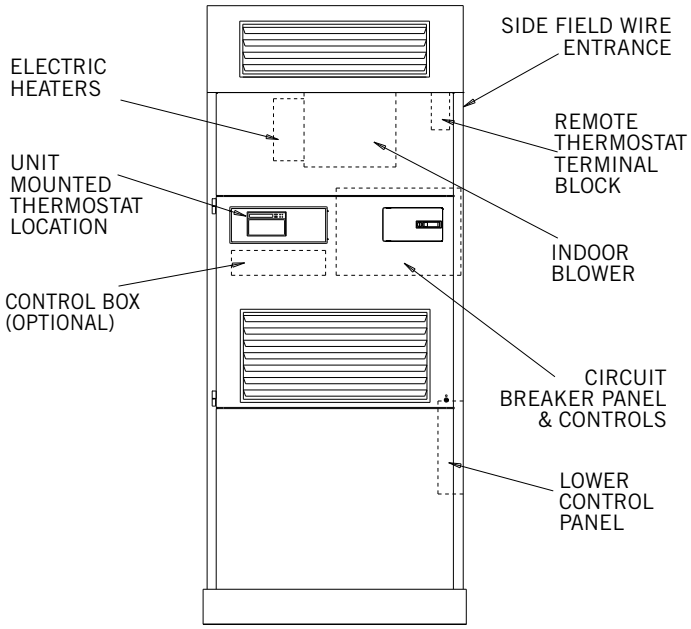

MIS-1577

The field wiring connections are located behind the top and hinged panel in the circuit breaker panel (see Figure 15).

WIRING – LOW VOLTAGE WIRING

230/208V 1 PHASE AND 3 PHASE EQUIPMENT DUAL PRIMARY VOLTAGE TRANSFORMERS.

All equipment leaves the factory wired on 240V tap. For 208V operation, reconnect from 240V to 208V tap. The acceptable operating voltage range for the 240 and 208V taps are as noted in Table 3.

TABLE 3 – OPERATING VOLTAGE RANGE

TAP	RANGE
240V	253 – 216
208V	220 – 187

NOTE: *The voltage should be measured at the field power connection point in the unit and while the unit is operating at full load (maximum amperage operating condition).*

OPTIONAL CLIMATE CONTROLS SEQUENCE OF OPERATION

The standard Climate Control ***Option X*** is a remote thermostat connection terminal block. See Figure 17A on page 22 for wiring diagram. Compatible thermostats are listed in Table 4. See Figure 17B on page 23 for Remote CO_2 Sensor Connection.

The Climate Control ***Option D*** is an electronic, programmable thermostat. The subbase of the thermostat is factory wired to the front panel of the unit. See Figure 18 on page 24 for wiring diagram. It is compatible for use with Energy Recovery Ventilator or Economizer. The thermostat can be set in the heat, cool or automatic mode. When the thermostat is set in the heat mode, it can heat only to maintain the temperature set on the thermostat. When the thermostat is set in the cool mode, it can cool only to maintain the temperature set on the thermostat. When the thermostat is set in the automatic mode, the thermostat can change automatically to the heat or cool modes to maintain the temperature set on the thermostat.

The Climate Control ***Option H*** is an electronic, programmable thermostat and a CO_2 controller. The subbase of the thermostat and CO_2 controller are factory wired to the front panel of the unit. See Figure 19 on page 25 for wiring diagram. The thermostat can be set in the heat, cool or automatic mode. When the thermostat is set in the heat mode, it can heat only to maintain the temperature set on the thermostat. When the thermostat is set in the cool mode, it can cool only to maintain the temperature set on the thermostat.

When the thermostat is set in the automatic mode, the thermostat can change automatically to the heat or cool modes to maintain the temperature set on the thermostat.

The CO_2 controller will energize the vent option and the ID blower when the room CO_2 levels rise over set level. Default CO_2 set point is 950 ppm (see Figure 23 on page 33).

Climate Control ***Option B & C*** are an electronic, programmable thermostat and (CO_2 controller on C Model only) with BACnet MS/TP or Ethernet connections.

The thermostat can be set in the heat, cool or automatic mode. When the thermostat is set in the heat mode, it can heat only to maintain the temperature set on the thermostat. When the thermostat is set in the cool mode, it can cool only to maintain the temperature set on the thermostat. When the thermostat is set in the automatic mode, the thermostat can change automatically to the heat or cool modes to maintain the temperature set on the thermostat.

Option C (Models only) the CO_2 sensor in the controller will energize the vent option and the ID blower when the room CO_2 levels rise over set level. Default CO_2 set point is 950 ppm.

NOTE: On Option X, field-provided means to control ventilation must be used if any of the motorized ventilation options are installed.

LOW VOLTAGE CONNECTIONS FOR DDC CONTROL

Fan Only	Energize G
Cooling Mode	Energize Y, G
Heat Pump Heating	Energize Y, G, B
2nd Stage Heating (if employed)	Energize G, W2
Ventilation	Energize G, O1
Emergency Heat	Energize B, W2, E

GENERAL

This unit is equipped with a variable speed ECM motor. The motor is designed to maintain rated airflow up to the maximum static allowed. ***It is important that the blower motor plugs are not plugged in or unplugged while the power is on. Failure to remove power prior to unplugging or plugging in the motor could result in motor failure.***

LOW VOLTAGE CONNECTIONS

These units use a grounded 24 volt AC low voltage circuit.

The *"R"* terminal is the *hot* terminal and the *"C"* terminal is *grounded.*

"G" terminal or pins 6 and 1 of P2 are the *fan inputs*. ***Both must be energized*** for proper fan operation. This is done automatically in the factory installed climate control options. If the climate control option is abandoned and connections are made directly to P2 both pins 6 and 1 of P2 must be energized for proper operation.

"Y" terminal or pin 7 of P2 is the *compressor input*.

"B" terminal or pin 8 of P2 is the *reversing valve input*. The reversing valve must be energized for heating mode.

"R" terminal or pin 10 of P2 is *24 VAC hot*.

"C" terminal or pin 11 of P2 is *24 VAC grounded.*

"L" terminal or pin 12 of P2 is *compressor lockout* **output**. This terminal is activated on a high or low pressure trip by the electronic heat pump control. This is a 24 VAC output.

"W2" terminal or pin 9 of P2 is *second stage heat* (if equipped). If the unit is equipped with an optional hot water coil plenum box or electric heat these will be energized by this terminal.

"O1" terminal of pin 5 of P2 is the *ventilation input*. This terminal energizes any factory installed ventilation option.

"E" terminal or pin 3 of P2 is the *emergency heat input.* This terminal energizes the emergency heat relay.

NOTE: For total and proper control using DDC, a total of 6 controlled outputs are required (5 if no ventilation system is installed). For proper system operation under Emergency Heat conditions. Where the compressor needs to be deactivated, the B-W2-E outputs need to be energized. Removing the Y (compressor) signal alone turns the compressor off, but does not activate the additional circuitry embedded in the heat pump for proper and complete operation.

⚠ CAUTION

Do not plug in or unplug blower motor connectors while the power is on. Failure to do so may result in motor failure.

TABLE 4
Wall Thermostats and Controls

Thermostat	Predominant Features
8403-067	Carbon Dioxide Sensor with LCD for Sensor Readings
8403-060 (1120-445)	3 stage Cool; 3 stage Heat Programmable/Non-Programmable Electronic HP or Conventional Auto or Manual changeover
CSB9E-THO	3 stage Cool; 3 stage Heat Programmable/Non-Programmable Electronic HP or Conventional Auto or Manual changeover with Humidity Contol BacNet MS/TP or Ethernet Connection
CSB9E-THOC	3 stage Cool; 3 stage Heat Programmable/Non-Programmable Electronic HP or Conventional Auto or Manual changeover with CO_2 & Humidity Contol BacNet MS/TP or Ethernet Connection

FIGURE 16

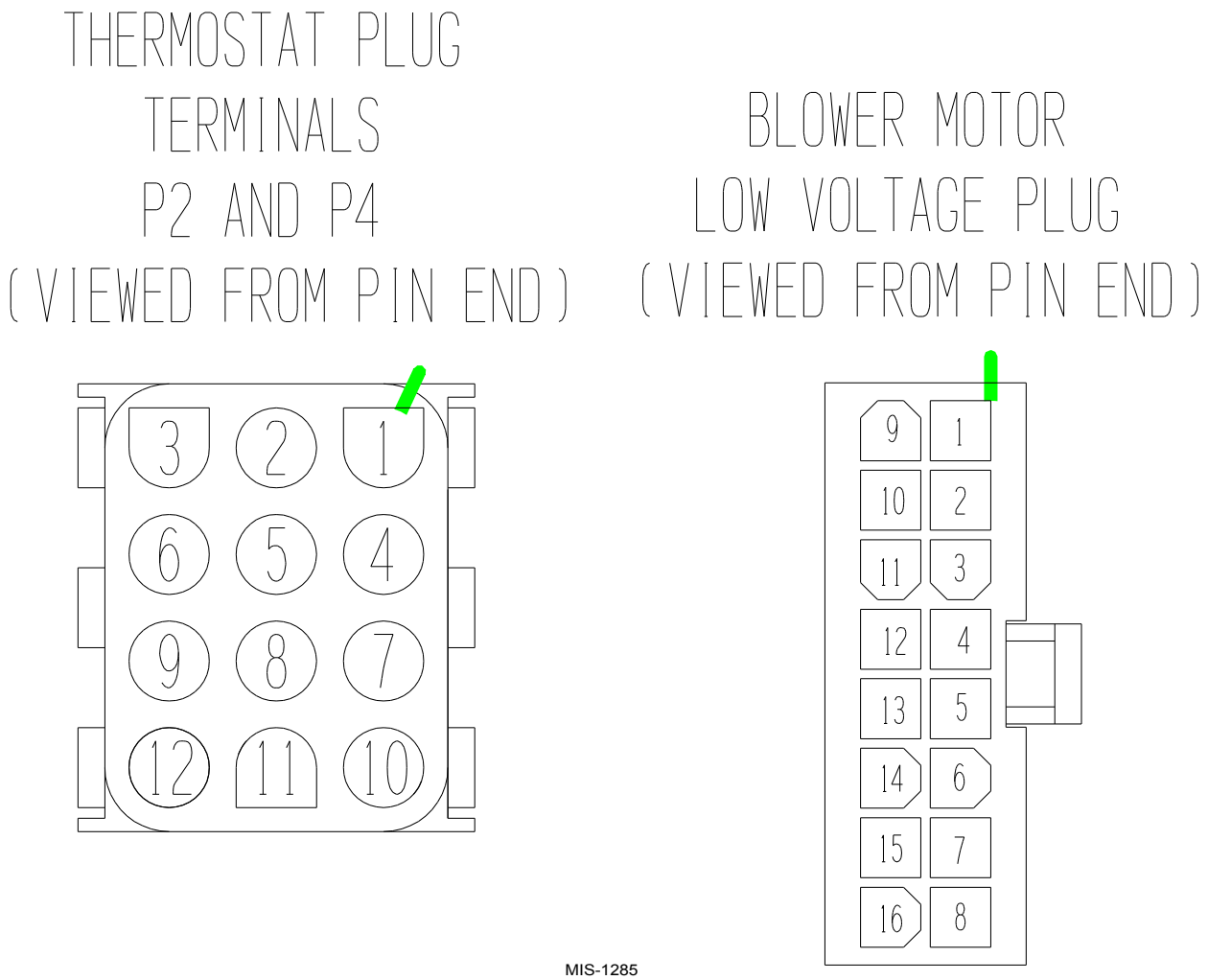

FIGURE 17A
Remote Thermostat Wiring Diagram
"X" Thermostat Option

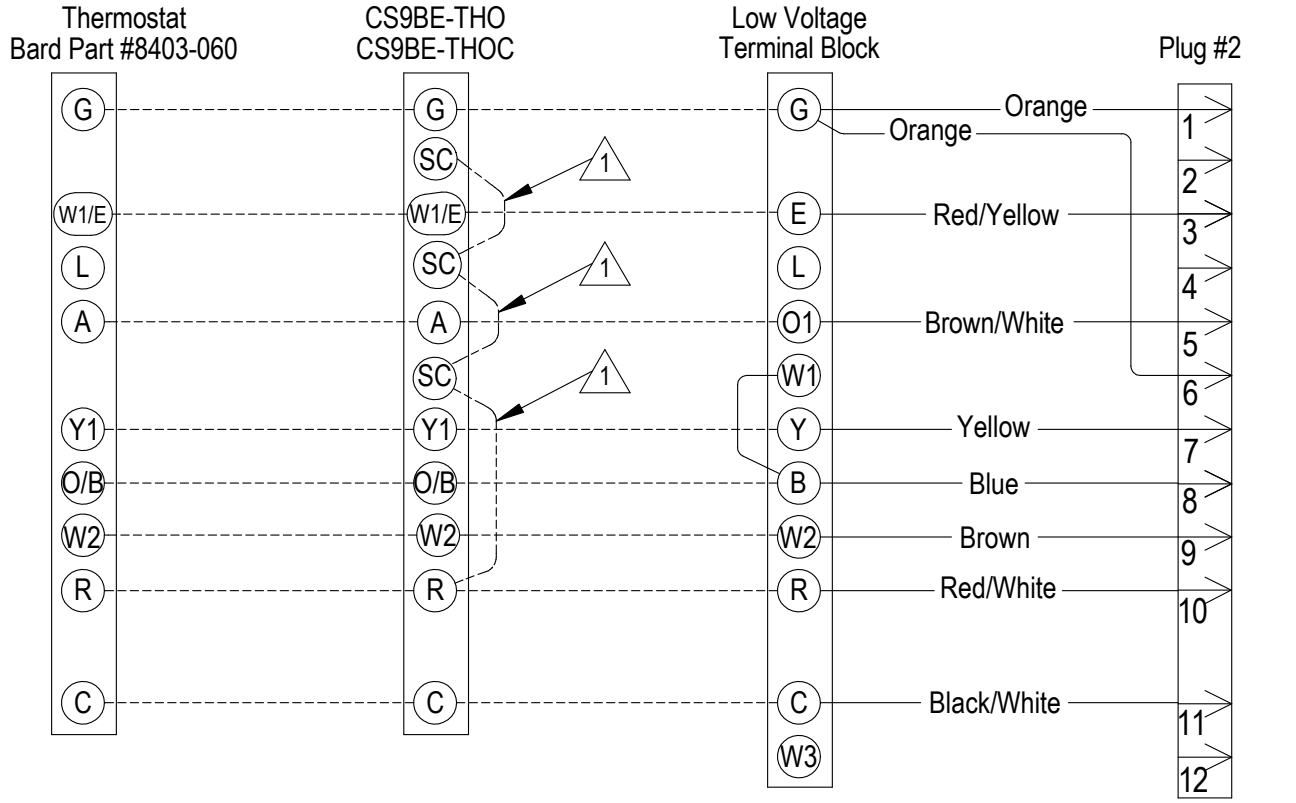

1 Factory installed jumper.

VENTILATOR OR DAMPER

NOTE: On Option X, field provided means to control ventilation O1 must be used if any of the motorized ventilation options are installed.

FIGURE 17B
Remote Thermostat Wiring Diagram
"X" Thermostat Option with Demand Ventilation

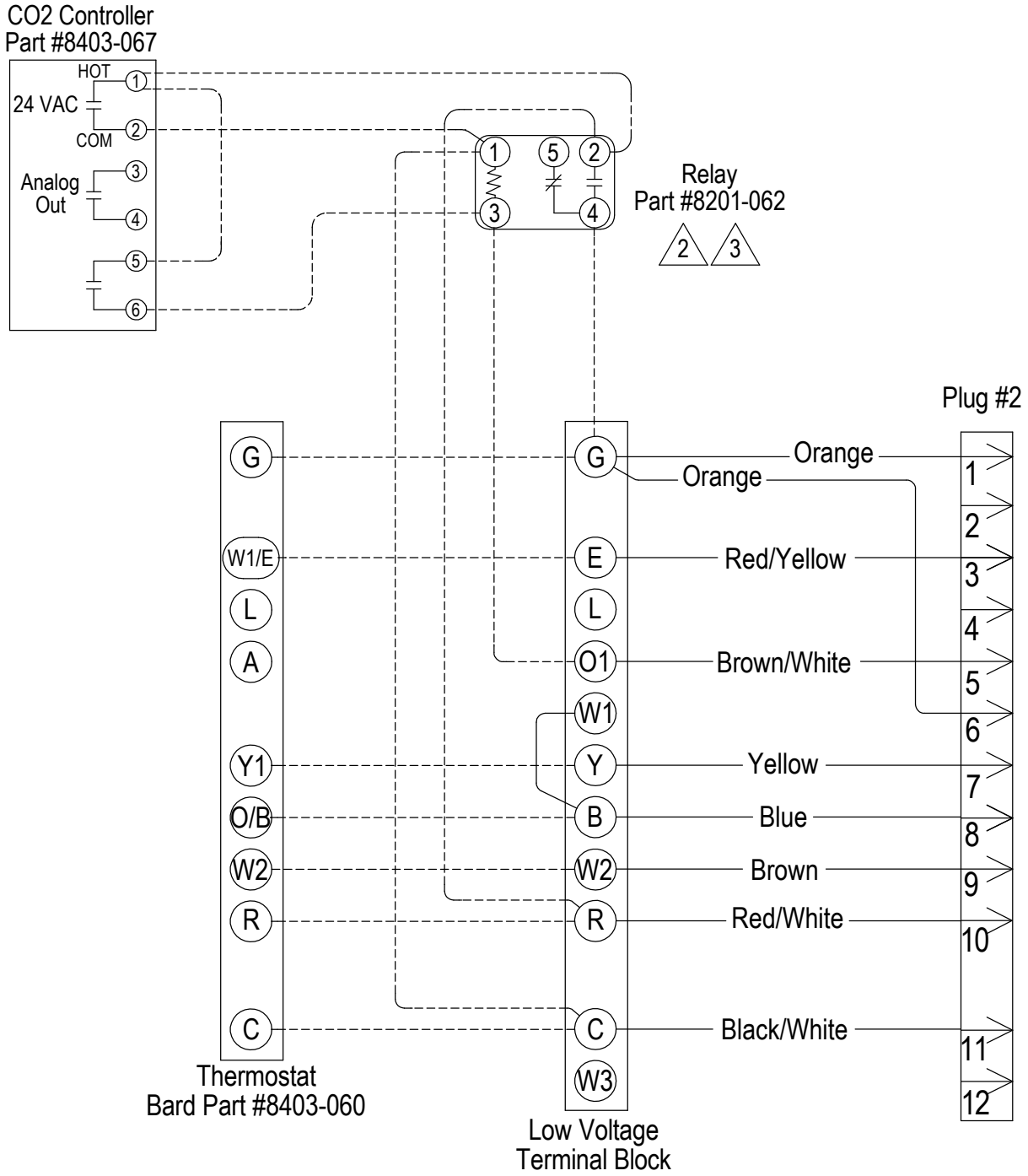

1 Factory installed jumper.

2 Mount relay in low voltage terminal block compartment.

3 Relay is field installed and required if demand ventilation control does not supply blower "G" signal when ventilation signal "O1" is supplied.

MIS-2688 B

FIGURE 18
Unit Mounted Thermostat Wiring Diagram
"D" Thermostat Option

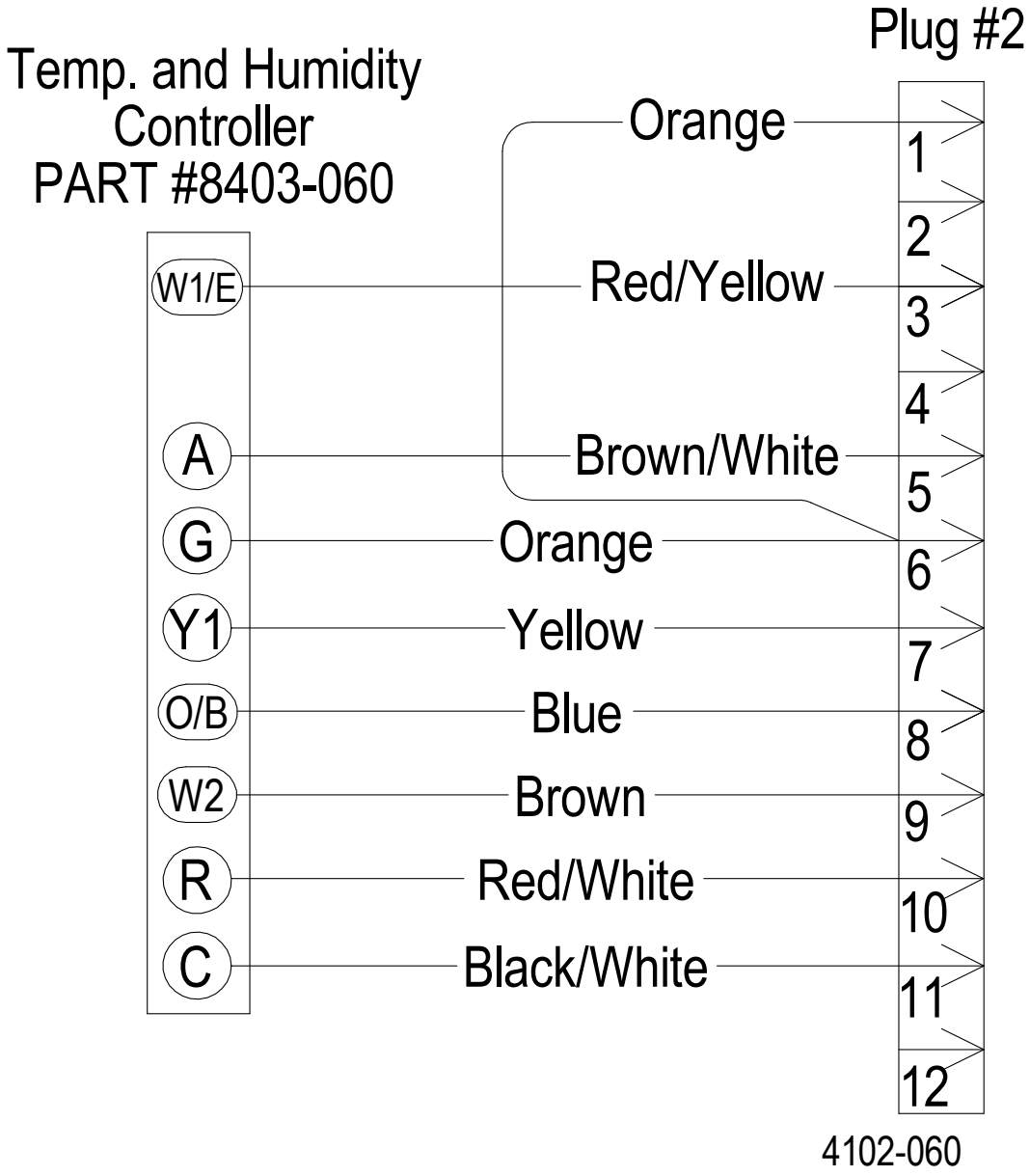

FIGURE 19
Unit Mounted Thermostat Wiring Diagram
"H" Thermostat Option

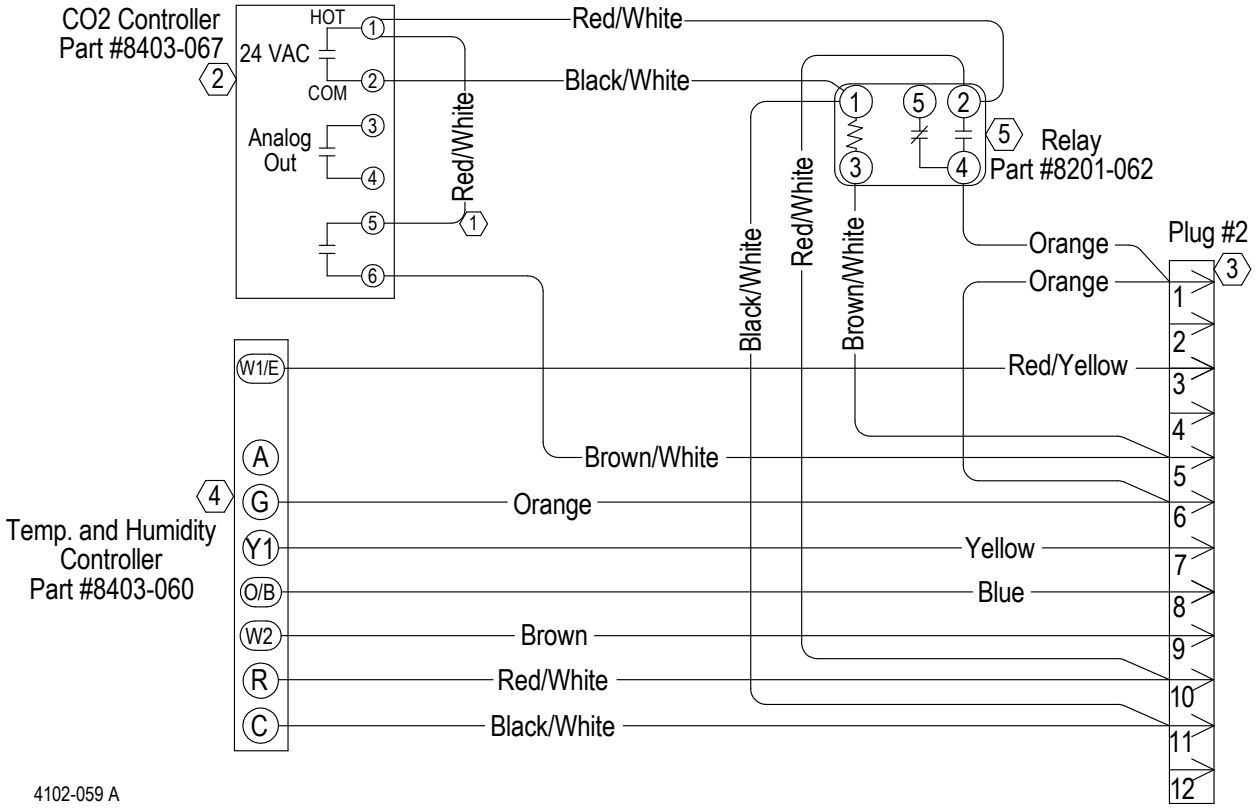

FIGURE 20
Unit Mounted Thermostat Wiring Diagram
"B" or "C" Thermostat Option

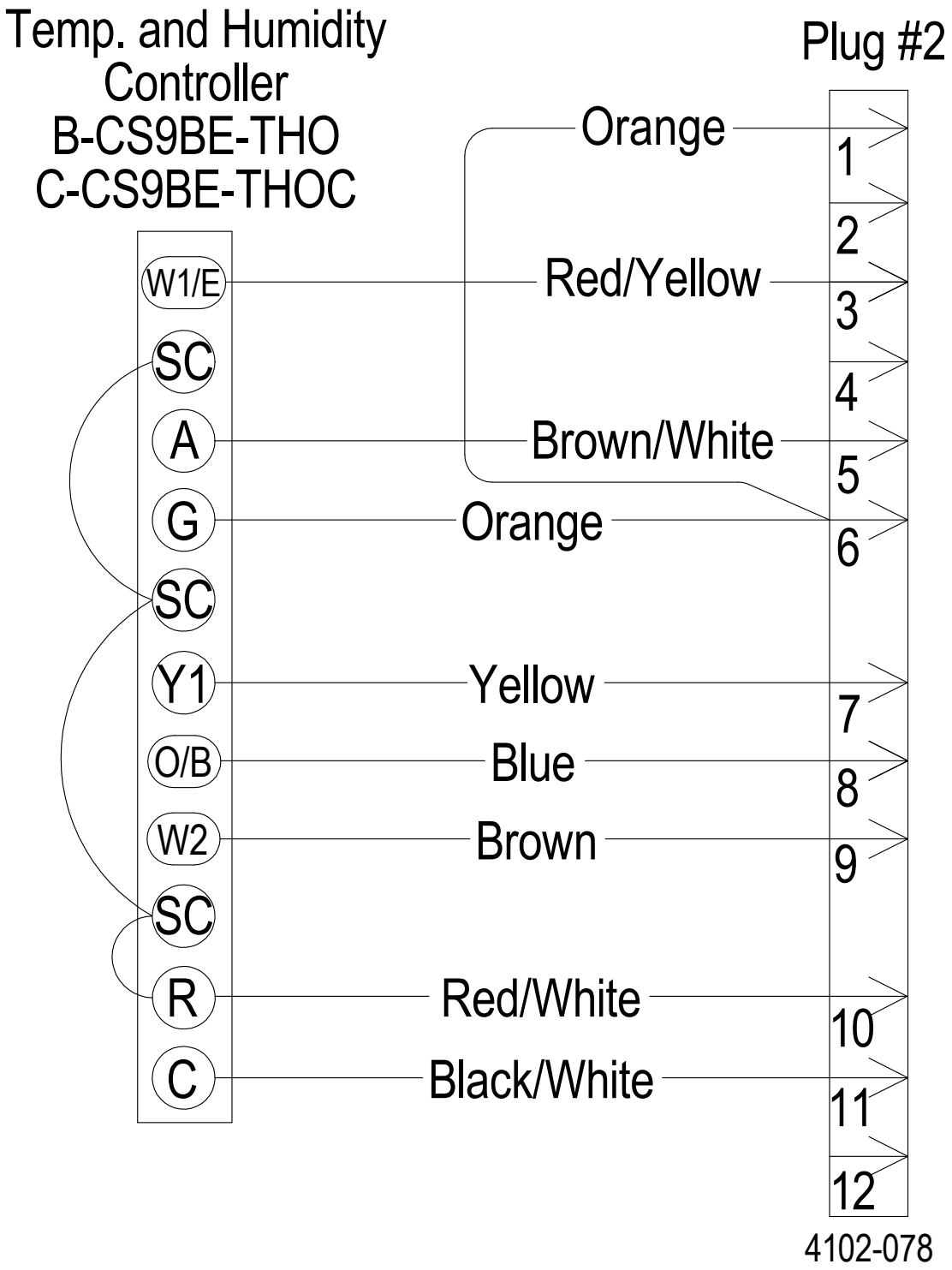

THESE UNITS REQUIRE R-410A REFRIGERANT AND POLYOL ESTER OIL.

GENERAL

1. Use separate service equipment to avoid cross contamination of oil and refrigerants.
2. Use recovery equipment rated for R-410A refrigerant.
3. Use manifold gauges rated for R-410A (800 psi/250 psi low).
4. R-410A is a binary blend of HFC-32 and HFC-125.
5. R-410A is nearly azeotropic, similar to R-22 and R-12. Although nearly azeotropic, charge with liquid refrigerant.
6. R-410A operates at 40-70% higher pressure than R-22, and systems designed for R-22 cannot withstand this higher pressure.
7. R-410A has an ozone depletion potential of zero, but must be reclaimed due to its global warming potential.
8. R-410A compressors use Polyol Ester oil.
9. Polyol Ester oil is hygroscopic; it will rapidly absorb moisture and strongly hold this moisture in the oil.
10. A liquid line dryer must be used—even a deep vacuum will not separate moisture from the oil.
11. Limit atmospheric exposure to 15 minutes.
12. If compressor removal is necessary, always plug compressor immediately after removal. Purge with small amount of nitrogen when inserting plugs.

TOPPING OFF SYSTEM CHARGE

If a leak has occurred in the system, Bard Manufacturing recommends reclaiming, evacuating (see criteria above) and charging to the nameplate charge. If done correctly, topping off the system charge can be done without problems.

With R-410A, there are no significant changes in the refrigerant composition during multiple leaks and recharges. R-410A refrigerant is close to being an azeotropic blend (it behaves like a pure compound or single component refrigerant). The remaining refrigerant charge, in the system, may be used after leaks have occurred and then "top-off" the charge by utilizing the pressure charts on the inner control panel cover as a guideline.

REMEMBER: When adding R-410A refrigerant, it must come out of the charging cylinder/tank as a liquid to avoid any fractionation, and to insure optimal system performance. Refer to instructions for the cylinder that is being utilized for proper method of liquid extraction.

⚠ WARNING

Failure to conform to these practices could lead to damage, injury or death.

SAFETY PRACTICES:

1. Never mix R-410A with other refrigerants.
2. Use gloves and safety glasses. Polyol Ester oils can be irritating to the skin, and liquid refrigerant will freeze the skin.
3. Never use air and R-410A to leak check; the mixture may become flammable.
4. Do not inhale R-410A—the vapor attacks the nervous system, creating dizziness, loss of coordination and slurred speech. Cardiac irregularities, unconsciousness and ultimate death can result from breathing this concentration.
5. Do not burn R-410A. This decomposition produces hazardous vapors. Evacuate the area if exposed.
6. Use only cylinders rated DOT4BA/4BW 400.
7. Never fill cylinders over 80% of total capacity.
8. Store cylinders in a cool area, out of direct sunlight.
9. Never heat cylinders above 125°F.
10. Never trap liquid R-410A in manifold sets, gauge lines or cylinders. R-410A expands significantly at warmer temperatures. Once a cylinder or line is full of liquid, any further rise in temperature will cause it to burst.

DESCRIPTION OF STANDARD EQUIPMENT

Solid State Electronic Heat Pump Control

Provides efficient 30-minute defrost cycle. A thermistor sensor and speed up terminal for service along with a 10-minute defrost override are standard on the electronic heat pump control.

High/Low Pressure Switch

Provides refrigerant circuit high pressure and loss of charge protection. Includes lockout circuit that is resettable from room thermostat.

Five-Minute Compressor Time Delay

Provides short cycle protection for the compressor which extends compressor life. Built into the electronic heat pump control as standard.

Service Light

One service light indicates when service is required.

- Check System – detects high or low pressure switch operation for compressor protection.

OPTIONAL CFM (Q36H2, Q42H2, Q48H2 AND Q60H2 ONLY)

These units are shipped from the factory set to operate at the optional CFM level shown in Table 8. This provides lower operating sound levels for non-ducted, free discharge applications. This CFM level will reduce the system capacity performance by approximately 2% at the same energy efficiency.

Rated CFM is required for ducted applications for maximum performance rating. To obtain full CFM on these models, connect jumper wire as follows:

1. Disconnect all power to the unit. Failure to do so may result in damage to the motor.
2. Open return air service panel.
3. Open inner control panel cover.
4. Locate low voltage terminal strip. There is a pink jumper wire with both ends attached to terminal marked “G2”. Move one end of this jumper to terminal “Y”.
5. Reverse steps to reassemble.

IMPORTANT INSTALLER NOTE

For improved start-up performance, wash the indoor coil with a dishwasher detergent.

PHASE MONITOR

All units with three phase scroll compressors are equipped with a three phase line monitor to prevent compressor damage due to phase reversal.

The phase monitor in this unit is equipped with two LEDs. If the Y signal is present at the phase monitor and phases are correct, the green LED will light and the compressor contactor is allowed to energize.

If phases are reversed, the red fault LED will be lit and compressor operation is inhibited.

If a fault condition occurs, reverse two of the supply leads to the unit. **Do not reverse any of the unit factory wires as damage may occur.**

THREE PHASE SCROLL COMPRESSOR START UP INFORMATION

Scroll compressors, like several other types of compressors, will only compress in one rotational direction. Direction of rotation is not an issue with single phase compressors since they will always start and run in the proper direction.

However, three phase compressors will rotate in either direction depending upon phasing of the power. Since there is a 50-50 chance of connecting power in such a way as to cause rotation in the reverse direction, ***verification of proper rotation must be made.*** Verification of proper rotation direction is made by observing that suction pressure drops and discharge pressure rises when the compressor is energized. Reverse rotation also results in an elevated sound level over that with correct rotation, as well as substantially reduced current draw compared to tabulated values.

Verification of proper rotation must be made at the time the equipment is put into service. If improper rotation is corrected at this time, there will be no negative impact on the durability of the compressor. However, reverse operation for even one hour may have a negative impact on the bearing due to oil pump out.

All three phase scroll compressors used in the Q-TEC series are wired identically internally. As a result, once the correct phasing is determined for a specific system or installation, connecting properly phased power leads to the same Fusite terminal should maintain proper rotation direction. The direction of rotation of the motor may be changed by reversing any two line connections to the unit.

SERVICE HINTS

1. Caution user to maintain clean air filters at all times and to not needlessly close off supply air registers. This may reduce airflow through the system, which shortens equipment service life as well as increasing operating costs and noise levels.
2. Switching to heating cycle at 75°F or higher outside temperature may cause a nuisance trip of the remote reset high pressure switch. Turn thermostat off, then on, to reset the high pressure switch.
3. Heat pump wall thermostats perform multiple functions. Be sure that all function switches are correctly set for the desired operating mode before trying to diagnose any reported service problems.
4. Check all power fuses or circuit breakers to be sure they are the correct rating.
5. Periodic cleaning of the outdoor coil to permit full and unrestricted airflow circulation is essential.
6. Some service requires the need to remove the unit from the wall including replacement of the indoor coil and/or the outdoor coil. Also, servicing the outdoor fan motor or fan blade will require removing the unit from the wall if the unit is installed at a height that is not easily accessible from the outside of the building.

   In order to remove the unit from the wall, the following procedure must be used:

   a. Turn off power to the unit at the remote location. Some units may have more than one power supply.
   b. Disconnect field wiring at unit terminal block and remove from unit.
   c. Disconnect condensate drain.
   d. Remove the lower skirting around the unit.
   e. Remove wall mounting brackets from wall on each side of the unit and/or remove the internal bolts in the lower section securing unit to wall sleeve.
   f. If unit is attached to duct work, remove upper cabinet extension by removing the top center screw only from the cabinet side panel.
   g. Remove screws that attach the duct work to the unit flanges.

      This unit is equipped with four rollers mounted to the base. For ease in pulling unit out from the wall, it may be desirable to remove the bottom service door, which requires removal of the return air panel. Grip the front flange of the base pan and pull straight out.
7. Annual maintenance is required to make sure that all of the systems are functioning properly.

   a. Check to make sure that the drains are not obstructed in any way.
   b. Remove any debris in the condenser section of the unit.
   c. Inspect and clean mist eliminator as described below.
   d. Inspect and wash outdoor coil as necessary.

MIST ELIMINATOR SERVICE

A mist eliminator is supplied with the wall sleeve. The mist eliminator is constructed of an aluminum frame and mesh. The mist eliminator is located in the top section of the wall sleeve and can be removed from the inside of the building without removing the unit from the wall. This requires that the ventilation package be removed.

It is recommended that the mist eliminator be inspected annually and serviced as required. The mist eliminator can be inspected from the outside of the building by looking through the outdoor grille. The mist eliminator can be serviced from the outside by using a vacuum cleaner. The outdoor grille must be removed. Use the vacuum to remove dirt and debris from the surface of the mist eliminator. If additional cleaning is required, the mist eliminator will have to be removed from the sleeve.

The ventilation package will have to be removed to gain access to the mist eliminator. If the blank-off plate option is used, it is not necessary to service the mist eliminator. The steps necessary to remove each of the vent options are listed on the following pages.

The mist eliminator can be cleaned by washing with soap and water. The excess water should be shaken off the mist eliminator before it is reinstalled.

VENT OPTIONS

Barometric Fresh Air Damper (Standard)

Before starting, make sure the power has been turned off. The return air grille panel must be removed. The fresh air damper assembly can be seen on the back of the unit (see Figure 21).

1. The fresh air damper is attached to the back of the unit with one screw on either side of the assembly. Both of the screws must be removed.
2. Once the mounting screws are removed, tilt the assembly down and lift it out.

The mist eliminator can be seen through the opening. The mist eliminator must be raised up and the bottom can be pulled toward the front of the unit and removed.

Commercial Room Ventilator (Option)

Before starting, make sure the power has been turned off. The return air grille panel must be removed. The commercial room ventilator (CRV) can be seen after the panel has been removed. The CRV must be removed to gain access to the mist eliminator.

1. The two mounting screws in the front of the CRV must be removed.
2. The power connectors for the CRV (located on the right side of the unit) must be disconnected. Squeeze the tabs on the sides of the connector and pull straight out. Unplug both of the connectors.
3. Slide the CRV straight out of the unit.

The mist eliminator can be seen through the opening in the back of the unit. The mist eliminator must be raised up and the bottom can be pulled toward the front of the unit and removed.

Q-TEC ENERGY RECOVERY VENTILATOR (Option)

Before starting, make sure that the power has been turned off. The return air grille panel must be removed. The energy recovery ventilator (QERV) can be seen after the panel has been removed. To gain access to the mist eliminator, the QERV must be removed. See Figure 22.

1. The front fill plate of the QERV must be removed. There is one screw on either side of the plate. Remove these screws and remove the plate.
2. On either side of the QERV there are mounting screws that hold the QERV in place. Remove both of these screws.
3. Underneath the heat recovery cassette is a power connector for the lower blower assembly. To disconnect this plug, squeeze the tabs on both sides of the plug to release the plug. While squeezing the tabs, pull the plug out of the socket.
4. The QERV is plugged into the unit in the right side of the unit. Both of these plugs must be disconnected to remove the QERV. Squeeze the tabs on the sides of the connector and pull straight out.
5. Slide the QERV assembly straight out of the unit, being careful not to let the cassette slide out of the QERV.

The mist eliminator can be seen through the opening in the back of the unit. The mist eliminator must be raised up and the bottom can be pulled toward the front of the unit and removed.

FIGURE 21
Fresh Air Damper Removal

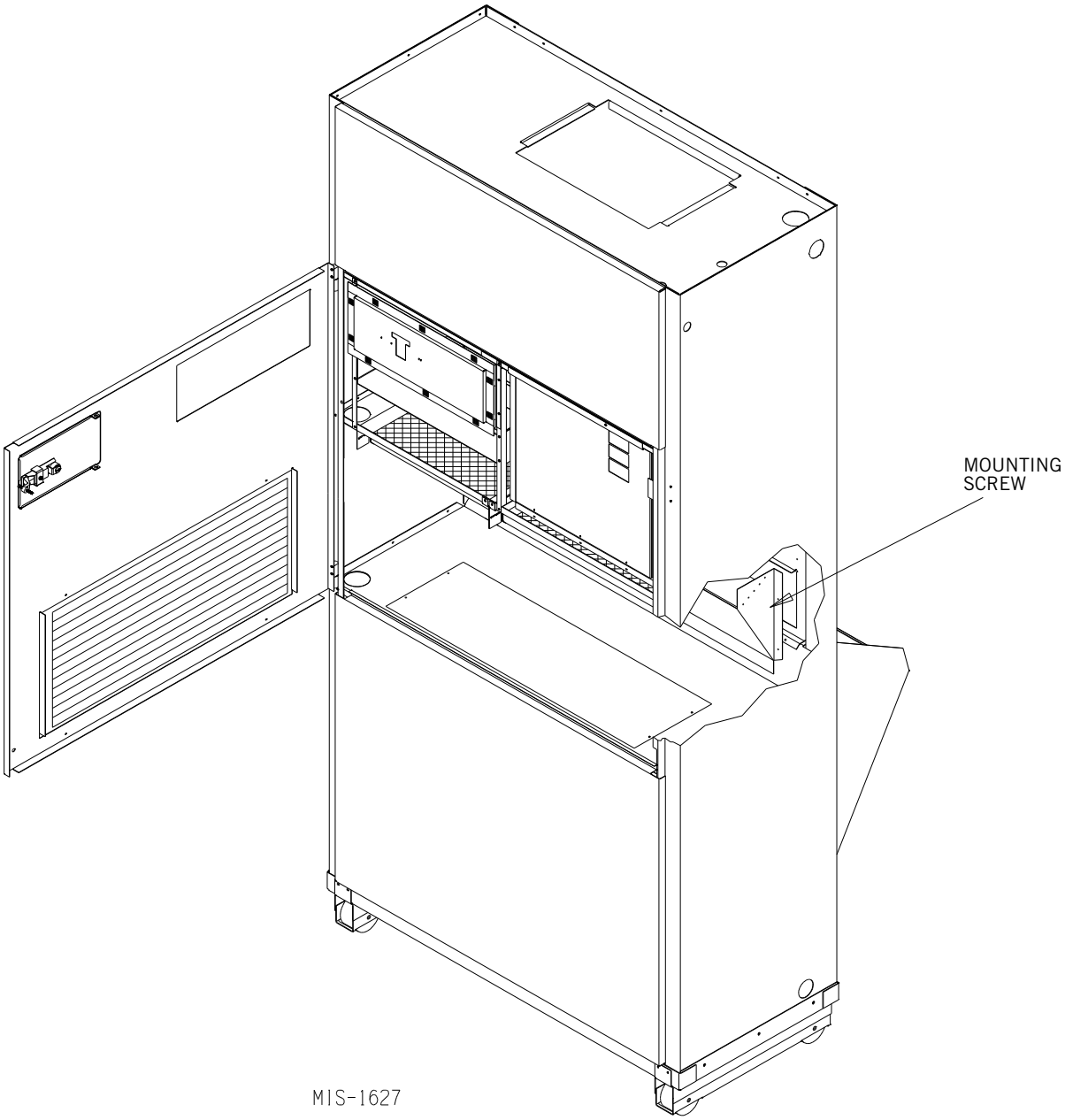

FIGURE 22
QERV Removal

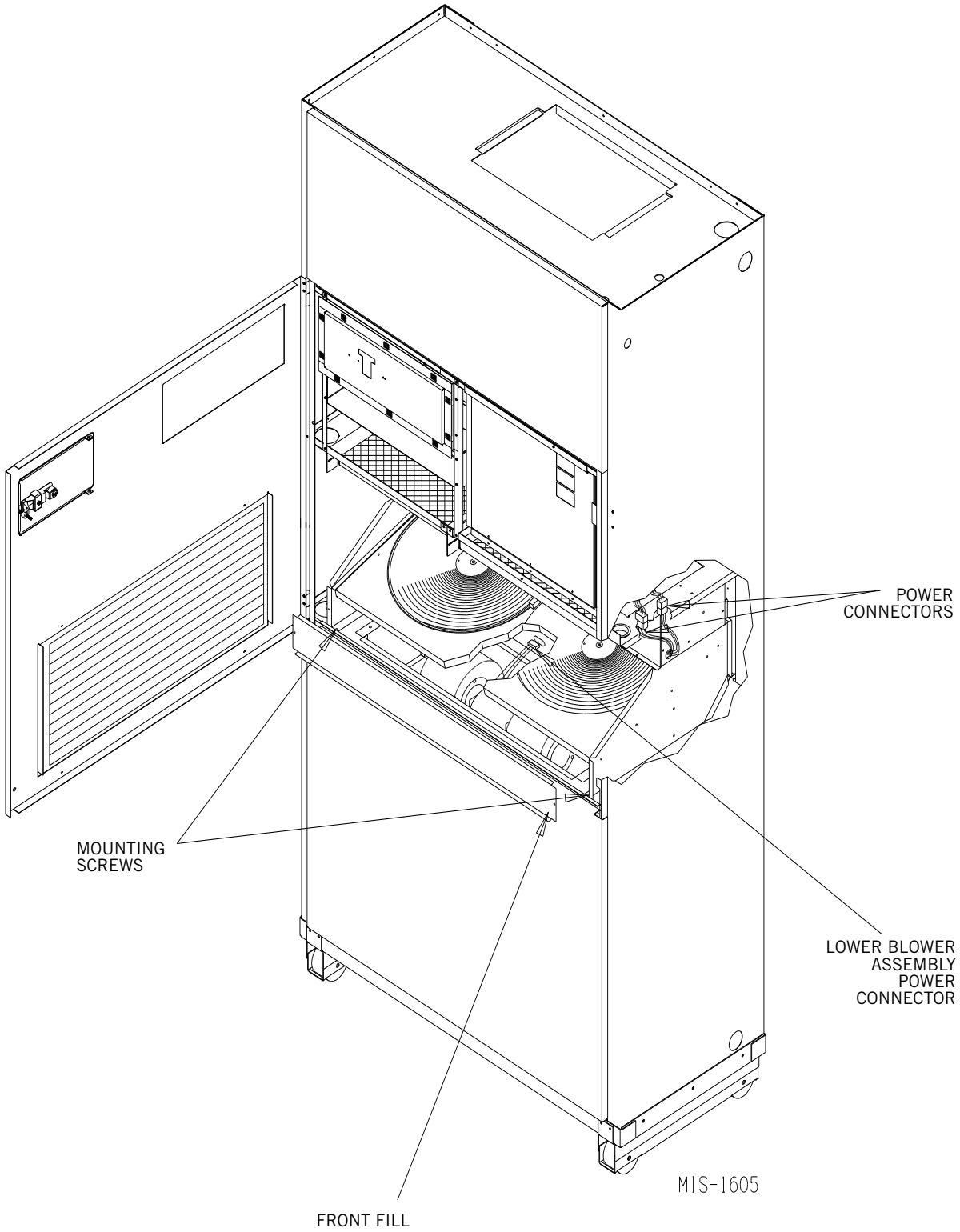

SEQUENCE OF OPERATION

Cooling – Circuit R-Y makes at thermostat, pulling in compressor contactor and starting the compressor and outdoor motor. The G (indoor motor) circuit is automatically completed on any call for cooling operation or can be energized by manual fan switch on subbase for constant air circulation.

Heating – A 24V solenoid coil on reversing valve controls heating cycle operation. Two thermostat options, one allowing "Auto" changeover from cycle to cycle and the other constantly energizing solenoid coil during heating season (thus eliminating pressure equalization noise except during defrost), are to be used. On "Auto" option a circuit is completed from R-W1 and R-Y on each heating "on" cycle, energizing reversing valve solenoid, pulling in compressor contactor and starting compressor and outdoor motor. R-G also makes, starting indoor blower motor. Heat pump heating cycle now in operation. The second option has no "Auto" changeover position, but instead energizes the reversing valve solenoid constantly whenever the system switch on subbase is placed in "Heat" position (the "B" terminal being constantly energized from R). A thermostat demand for heat completes R-Y circuit, pulling in compressor contactor and starting compressor and outdoor motor. R-G also makes, starting indoor blower motor.

High/Low Pressure control provides protection for the compressor. In the event system pressures go above 600 PSI or below 15 PSI in either cooling or heating mode, the compressor will be stopped. This will activate the red light located in the control panel. The lockout circuit will hold compressor off line. When the system problem is corrected, the unit operation can be restored by turning the main power supply off and then back on, or by resetting the room thermostat. The low pressure control has a bypass to eliminate nuisance lockout on cold start up.

The bypass timer should be set to 120 seconds. This is to assure there is no nuisance tripping of the low-pressure control during start up in heating mode under cold weather conditions (see Defrost Control Board – Figure 24.

FIGURE 23
CO_2 Controller (factory set to 950 ppm)

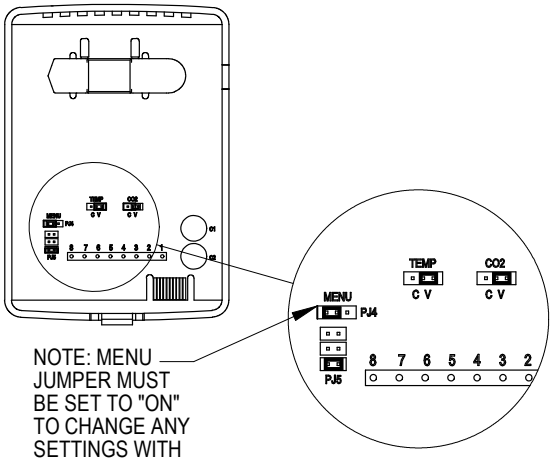

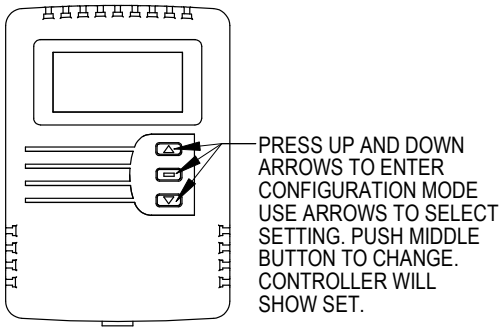

Settings	Recommended	Default
RON	1000	1000
ROF	950	950
DSP	C	CT
UNI	US	US
COL	Not Used	
COH	Not Used	
TOL	Not Used	
TOH	Not Used	
BAR	See Instrution with Controller For High Altitude Installations	
CAL	Used for Field Calibration	

MIS-3326

PRESSURE SERVICE PORTS

High and low pressure service ports are installed on all units so that the system operating pressures can be observed. Pressure tables covering all models can be found on pages 41 and 42. It is imperative to match the correct pressure table to the unit by model number. Upper and lower service doors must be attached to obtain proper reading.

This unit employs high-flow Coremax valves instead of the typical Shrader type valves.

WARNING! Do NOT use a Schrader valve core removal tool with these valves. Use of such a tool could result in eye injuries or refrigerant burns!

To change a Coremax valve without first removing the refrigerant, a special tool is required which can be obtained at www.fastestinc.com/en/SCCA07H. See the replacement parts manual for replacement core part numbers.

DEFROST CYCLE

The defrost cycle is controlled by temperature and time on the solid state heat pump control.

When the outdoor temperature is in the lower 40°F temperature range or colder, the outdoor coil temperature is 32°F or below. This coil temperature is sensed by the coil temperature sensor mounted near the bottom of the outdoor coil. Once coil temperature reaches 30°F or below, the coil temperature sensor sends a signal to the control logic of the heat pump control and the defrost timer will start accumulating run time.

After 30, 60 or 90 minutes of heat pump operation at 30°F or below, the heat pump control will place the system in the defrost mode.

During the defrost mode, the refrigerant cycle switches back to the cooling cycle, the outdoor motor stops, electric heaters are energized and hot gas passing through the outdoor coil melts any accumulated frost. When the temperature rises to approximately 57°F, the coil temperature sensor will send a signal to the heat pump control which will return the system to heating operations automatically.

If some abnormal or temporary condition such as a high wind causes the heat pump to have a prolonged defrost cycle, the heat pump control will restore the system to heating operation automatically after 8 minutes.

The heat pump defrost control board has an option of 30-, 60- or 90-minute setting. By default, this unit is shipped from the factory with the defrost time on the 30-minute pin. If circumstances require a change to another time, remove the wire from the 30-minute terminal and reconnect to the desired terminal (refer to Figure 24).

There is a cycle speed up jumper on the control. This can be used for testing purposes to reduce the time between defrost cycle operation without waiting for time to elapse.

Use a small screwdriver or other metallic object, or another ¼ inch QC, to short between the *SPEEDUP* terminals to accelerate the HPC timer and initiate defrost.

Be careful not to touch any other terminals with the instrument used to short the *SPEEDUP* terminals. It may take up to 10 seconds with the *SPEEDUP* terminals shorted for the speedup to be completed and the defrost cycle to start.

As soon as the defrost cycle kicks in, remove the shorting instrument from the SPEEDUP terminals. Otherwise the timing will remain accelerated and run through the 1-minute minimum defrost length sequence in a matter of seconds and will automatically terminate the defrost sequence.

There is an initiate defrost jumper (sen jump) on the control that can be used at any outdoor ambient during the heating cycle to simulate a 0° coil temperature. This can be used to check defrost operation of the unit without waiting for the outdoor ambient to fall into the defrost region.

By placing a jumper across the *SEN JMP* terminals (a ¼ inch QC terminal works best), the defrost sensor mounted on the outdoor coil is shunted out and will activate the timing circuit. This permits the defrost cycle to be checked out in warmer weather conditions without the outdoor temperature having to fall into the defrost region.

In order to terminate the defrost test, the *SEN JMP* jumper must be removed. If left in place too long, the compressor could stop due to the high pressure control opening because of high pressure condition created by operating in the cooling mode with outdoor fan off. Pressure will rise fairly fast as there is likely no actual frost on the outdoor coil in this artificial test condition.

There is also a 5-minute compressor time delay function built into the HPC. This is to protect the compressor from short cycling conditions. The board's LED will have a fast blink rate when in the compressor time delay. In some instances, it is helpful to the service technician to override or speed up this timing period, and shorting out the *SPEEDUP* terminals for a few seconds can do this.

Low Pressure Switch Bypass Operation – The control has a selectable (SW1) low pressure switch bypass set up to ignore the low pressure switch input during the first (30, 60, 120 or 180 seconds) of "Y" operation.

After this period expires, the control will then monitor the low pressure switch input normally to make sure that the switch is closed during "Y" operation.

High Pressure Switch Operation – The control has a built-in lockout system that allows the unit to have the high pressure switch trip up to two times in one hour and only encounter a "soft" lockout. A "soft" lockout shuts the compressor off and waits for the pressure switch to reset, which at that point then allows the compressor to be restarted as long as the 5-minute short cycle timer has run out. If the high pressure switch trips a third time within one hour, the unit is in "hard" lockout indicating something is wrong and it will not restart itself.

Figure 24
Defrost Control Board

SW 1	SW 2	TIME (SEC)
OFF	OFF	30
ON	OFF	60
OFF	ON	120*
ON	ON	180

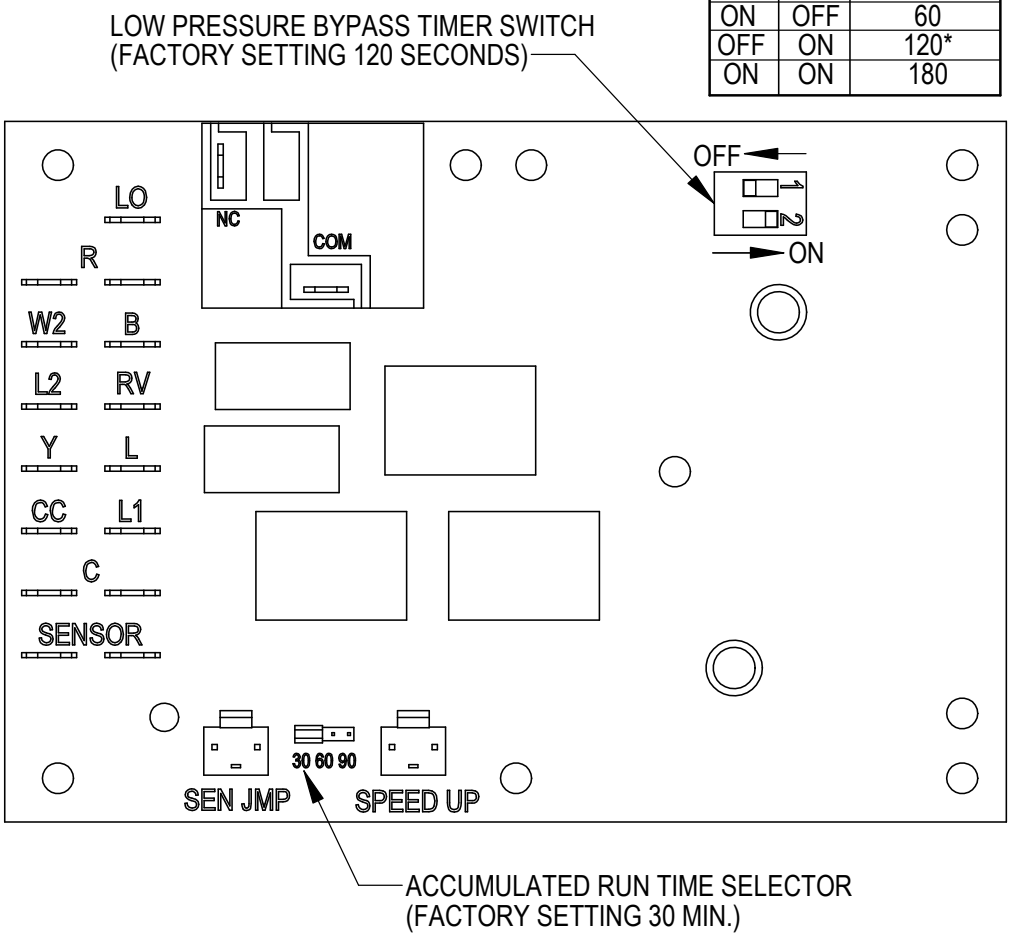

MIS-2684 A

TROUBLESHOOTING

SOLID STATE HEAT PUMP CONTROL TROUBLESHOOTING PROCEDURE

1. **NOTE:** *A thorough understanding of the defrost cycle sequence is essential. Review that section earlier in this manual prior to troubleshooting the control.* Turn on AC power supply to unit.
2. Turn thermostat blower switch to "fan on"— the indoor blower should start. (If it doesn't, troubleshoot indoor unit and correct problem.)
3. Turn thermostat blower to "auto" position. Indoor blower should stop. **NOTE:** *Many models have a 1-minute blower time delay on "off" command; wait for this to time-out.*
4. Set system switch to "heat" or "cool". Adjust thermostat to call for heat or cool. The indoor blower, compressor and outdoor fan should start.

NOTE: If there was no power to 24 volt transformer, the compressor and outdoor fan motor will not start for 5 minutes. This is because of the compressor short cycle protection.

LED BLINK CODES

BLINK	FUNCTION
Slow	Normal function (1.0 sec on/1.0 sec off)
Fast	ASCD (Compressor Delay) timer active (0.1 sec on/0.1 sec off)
1	Low pressure switch failure
2	High pressure switch failure/"Soft" Lockout
3	Defrost mode active
4	High pressure switch failure/"Hard" Lockout

TABLE 5
Troubleshooting

Sympton	Description, Check and Possible Causes	What and How to Check/Repair
Compressor will not start (heating or cooling)	**1. Check for LED illumination.** Is there an LED illuminated on the board (flashing)?	Yes = go to Step #2; No = go to Step #3
	2. Check for error codes. Is the LED flashing a Code?	Yes = go to Step #4; No = go to Step #8
	3. Check for power at board. Is there 24 volts AC between R and C?	Yes = go to Step #13; No = go to Step #9
	4. Check codes. What code is blinking?	Code "1", go to Step #6; Code "2", go to Step#7; Fast Blink, go to Step #5
	5. Compressor delay active. Wait for 5 minute delay or jump board's "speed up pins".	Check for proper operation; if still needed, go back to Step #1.
	6. Low pressure fault.	Check wiring circuit and unit pressures.
	7. High pressure fault.	Check wiring circuit and unit pressures.
	8. Check for Compressor input signal. Is there 24 volts AC between Y and C?	Yes = go to Step #10; No = go to Step #11
	9. No power to board.	The unit either does not have unit voltage, the transformer is bad or the unit wiring is incorrect.
	10. Check for Compressor output signal. Is there 24 volts AC between CC & C?	Yes = go to Step #12; No = go to Step #13
	11. No "Y" compressor input signal.	Check thermostat wiring, incorrect phase of unit (see section on Phase Monitor), and finally unit wiring.
	12. No "CC" compressor output signal.	Check compressor contactor for proper operation and finally check compressor.
	13. Faulty board.	Replace defrost board.
Fan outdoor motor does not run (cooling or heating except during defrost)	Heat pump control defective	Check across fan relay on heat pump control. (Com-NC) Replace heat pump control.
	Motor defective	Check for open or shorted motor winding. Replace motor.
	Motor capacitor defective	Check capacitor rating. Check for open or shorted capacitor. Replace capacitor.
Reversing valve does not energize (heating only)	Heat pump control defective	Check for 24V between RV-C and B-C. 1. Check control circuit wiring. 2. Replace heat pump control.
	Reversing valve solenoid coil defective	Check for open or shorted coil. Replace solenoid coil.
Unit will not go into defrost (heating only)	Temperature sensor or heat pump control defective	Disconnect temperature sensor from board and jumper across "SPEEDUP" terminals and "SEN JMP" terminals. This should cause the unit to go through a defrost cycle within one minute. 1. If unit goes through defrost cycle, replace temperature sensor. 2. If unit does not go through defrost cycle, replace heat pump control.
Unit will not come out of defrost (heating only)	Temperature sensor or heat pump control defective	Jumper across "SPEEDUP" terminal. This should cause the unit to come out of defrost within one minute. 1. If unit comes out of defrost cycle, replace temperature sensor. 2. If unit does not come out of defrost cycle, replace heat pump control.

CHECKING TEMPERATURE SENSOR

1. Disconnect temperature sensor from board and from outdoor coil.
2. Use an ohmmeter to measure the resistance of the sensor. Also use ohmmeter to check for short or open.
3. Check resistance reading to chart of resistance use sensor ambient temperature. (Tolerance of part is ±10%.)
4. If sensor resistance reads very low, then sensor is shorted and will not allow proper operation of the heat pump control.
5. If sensor is out of tolerance, shorted, open or reads very low ohms, then it should be replaced.

TABLE 6
Temperature(F) Vs. Resistance (R) of Temperature Sensor

F	R	F	R	F	R	F	R
-25.0	196871	13.0	56985	53.0	19374	89.0	7507
-24.0	190099	14.0	55284	52.0	18867	90.0	7334
-23.0	183585	15.0	53640	53.0	18375	91.0	7165
-22.0	177318	16.0	52051	54.0	17989	92.0	7000
-21.0	171289	17.0	50514	55.0	17434	93.0	6840
-20.0	165487	18.0	49028	56.0	16984	94.0	6683
-19.0	159904	19.0	47590	57.0	16547	95.0	6531
-18.0	154529	20.0	46200	58.0	16122	96.0	6383
-17.0	149355	21.0	44855	59.0	15710	97.0	6239
-16.0	144374	22.0	43554	60.0	15310	98.0	6098
-15.0	139576	23.0	42295	61.0	14921	99.0	5961
-14.0	134956	24.0	41077	62.0	14544	100.0	5827
-13.0	130506	25.0	39898	63.0	14177	101.0	5697
-12.0	126219	26.0	38757	64.0	13820	102.0	5570
-11.0	122089	27.0	37652	65.0	13474	103.0	5446
-10.0	118108	28.0	36583	66.0	13137	104.0	5326
-9.0	114272	29.0	35548	67.0	12810	105.0	5208
-8.0	110575	30.0	34545	68.0	12492	106.0	5094
-7.0	107010	31.0	33574	69.0	12183	107.0	4982
-6.0	103574	32.0	32634	70.0	11883	108.0	4873
-5.0	100260	33.0	31723	71.0	11591	109.0	4767
-4.0	97064	34.0	30840	72.0	11307	110.0	4663
-3.0	93981	35.0	29986	73.0	11031	111.0	4562
-2.0	91008	36.0	29157	74.0	10762	112.0	4464
-1.0	88139	37.0	28355	75.0	10501	113.0	4367
0.0	85371	38.0	27577	76.0	10247	114.0	4274
1.0	82699	39.0	26823	77.0	10000	115.0	4182
2.0	80121	40.0	26092	78.0	9760	116.0	4093
3.0	77632	41.0	25383	79.0	9526	117.0	4006
4.0	75230	42.0	24696	80.0	9299	118.0	3921
5.0	72910	43.0	24030	81.0	9077	119.0	3838
6.0	70670	44.0	23384	82.0	8862	120.0	3757
7.0	68507	45.0	22758	83.0	8653	121.0	3678
8.0	66418	46.0	22150	84.0	8449	122.0	3601
9.0	64399	47.0	21561	85.0	8250	123.0	3526
10.0	62449	48.0	20989	86.0	8057	124.0	3452
11.0	60565	49.0	20435	87.0	7869		
12.0	58745	50.0	19896	88.0	7686		

TROUBLESHOOTING ECM™ MOTORS

CAUTION:

Disconnect power from unit before removing or replacing connectors, or servicing motor. To avoid electric shock from the motor's capacitors, disconnect power and wait at least 5 minutes before opening motor.

Symptom	Cause/Procedure
Motor rocks slightly when starting	• This is normal start-up for ECM
Motor won't start • No movement	• Check blower turns by hand • Check power at motor • Check low voltage (24 Vac R to C) at motor • Check low voltage connections (G, Y, W, R, C) at motor • Check for unseated pins in connectors on motor harness • Test with a temporary jumper between R - G • Check motor for tight shaft • Perform motor/control replacement check • **Perform Moisture Check**
• Motor rocks, but won't start	• Check for loose or compliant motor mount • Make sure blower wheel is tight on shaft • Perform motor/control replacement check
Motor oscillates up & down while being tested off of blower	• It is normal for motor to oscillate with no load on shaft
Motor starts, but runs erratically • Varies up and down or intermittent	• Check line voltage for variation or "sag" • Check low voltage connections (G, Y, W, R, C) at motor, unseated pins in motor harness connectors • Check "Bk" for erratic CFM command (in variable-speed applications) • Check out system controls, thermostat • **Perform Moisture Check**
• "Hunts" or "puffs" at high CFM (speed)	• Does removing panel or filter reduce "puffing"? - Reduce restriction - Reduce max airflow
• Stays at low CFM despite system call for cool or heat CFM	• Check low voltage (Thermostat) wires and connections • Verify fan is not in delay mode; wait until delay complete • "R" missing/not connected at motor • Perform motor/control replacement check
• Stays at high CFM	• "R" missing/not connected at motor • Is fan in delay mode? - wait until delay time complete • Perform motor/control replacement check
• Blower won't shut off	• Current leakage from controls into G, Y or W? Check for Triac switched thermostat or solid-state relay
Excessive noise necessary • Air noise	• Determine if it's air noise, cabinet, duct or motor noise; interview customer, if • High static creating high blower speed? - Is airflow set properly? - Does removing filter cause blower to slow down? Check filter - Use low-pressure drop filter - Check/correct duct restrictions

Symptom	Cause/Procedure
• Noisy blower or cabinet	• Check for loose blower housing, panels, etc. • High static creating high blower speed? - Check for air whistling through seams in ducts, cabinets or panels - Check for cabinet/duct deformation
• "Hunts" or "puffs" at high CFM (speed)	• Does removing panel or filter reduce "puffing"? - Reduce restriction - Reduce max. airflow
Evidence of Moisture • Motor failure or malfunction has occurred and moisture is present	• Replace motor and **Perform Moisture Check**
• Evidence of moisture present inside air mover	• **Perform Moisture Check**

Do	Don't
• Check out motor, controls, wiring and connections thoroughly before replacing motor	• Automatically assume the motor is bad.
• Orient connectors down so water can't get in - Install "drip loops"	• Locate connectors above 7 and 4 o'clock positions
• Use authorized motor and model #'s for replacement	• Replace one motor or control model # with another (unless an authorized replacement)
• Keep static pressure to a minimum: - Recommend high efficiency, low static filters - Recommend keeping filters clean. - Design ductwork for min. static, max. comfort - Look for and recommend ductwork improvement, where necessary	• Use high pressure drop filters; some have **½"** H2O drop! • Use restricted returns
• Size the equipment wisely	• Oversize system, then compensate with low airflow
• Check orientation before inserting motor connectors	• Plug in power connector backwards • Force plugs

Moisture Check

- Connectors are oriented "down" (or as recommended by equipment manufacturer)
- Arrange harness with "drip loop" under motor
- Is condensate drain plugged?
- Check for low airflow (too much latent capacity)
- Check for undercharged condition
- Check and plug leaks in return ducts, cabinet

Comfort Check

- Check proper airflow settings
- Low static pressure for lowest noise
- Set low continuous-fan CFM
- Use humidistat and 2-speed cooling units
- Use zoning controls designed for ECM that regulate CFM
- Thermostat in bad location?

Replacing ECM Control Module

To replace the control module for the GE variable-speed indoor blower motor, take the following steps:

1. The correct replacement module MUST be used. The controls are factory programmed for specific operating modes. Even though they look alike, different modules may have completely different functionality.

   USING THE WRONG CONTROL MODULE VOIDS ALL PRODUCT WARRANTIES AND MAY PRODUCE UNEXPECTED RESULTS.

2. Begin by removing AC power from the furnace or air handler being serviced. **DO NOT WORK ON THE MOTOR WITH AC POWER APPLIED.** To avoid electric shock from the motor's capacitors, disconnect power and wait at least 5 minutes before opening motor.
3. It is usually not necessary to remove the motor from the blower assembly. However, it is recommended that the whole blower assembly, with the motor, be removed from the furnace/air handler. (Follow the manufacturer's procedures). Unplug the two cable connectors to the motor. There are latches on each connector. **DO NOT PULL ON THE WIRES.** The plugs remove easily when properly released.
4. Locate the two standard ¼" hex head bolts at the rear of the control housing (at the back end of the control opposite the shaft end). *Refer to Figure 25.* Remove these two bolts from the motor and control assembly while holding the motor in a way that will prevent the motor or control from falling when the bolts are removed. If an ECM2.0 control is being replaced (recognized by an aluminum casting rather that a deep-drawn black steel can housing the electronics), remove only the hex-head bolts. **DO NOT REMOVE THE TORX-HEAD SCREWS.**
5. The control module is now free of mechanical attachment to the motor endshield but is still connected by a plug and three wires inside the control. Carefully rotate the control to gain access to the plug at the control end of the wires. With thumb and forefinger, reach the latch holding the plug to the control and release it by squeezing the latch tab and the opposite side of the connector plug and gently pulling the plug out of the connector socket in the control. **DO NOT PULL ON THE WIRES. GRIP THE PLUG ONLY.**
6. The control module is now completely detached from the motor. Verify with a standard ohmmeter that the resistance from each motor lead (in the motor plug just removed) to the motor shell is >100K ohms. *Refer to Figure 26.* (Measure to unpainted motor end plate.) If any motor lead fails this test, do not proceed to install the control module. **THE MOTOR IS DEFECTIVE AND MUST BE REPLACED.** Installing the new control module will cause it to fail also.
7. Verify that the replacement control is correct for the application. Refer to the manufacturer's authorized replacement list. **USING THE WRONG CONTROL WILL RESULT IN IMPROPER OR NO BLOWER OPERATION.** Orient the control module so that the 3-wire motor plug can be inserted into the socket in the control. Carefully insert the plug and press it into the socket until it latches. **A SLIGHT CLICK WILL BE HEARD WHEN PROPERLY INSERTED.** Finish installing the replacement control per one of the three following paragraphs, 7a, 7b or 7c.

   7a. **IF REPLACING AN ECM 2.0 CONTROL** (control in cast aluminum can with air vents on the back of the can) **WITH AN ECM 2.3 CONTROL** (control containing black potting for water protection in black deep-drawn steel case with no vents in the bottom of the can), locate the two through-bolts and plastic tab that are packed with the replacement control. Insert the plastic tab into the slot at the perimeter of the open end of the can so that the pin is located on the inside of the perimeter of the can. Rotate the can so that the tab inserts into the tab locater hole in the endshield of the motor. Using the two through-bolts provided with the replacement control, reattach the can to the motor.

   THE TWO THROUGH-BOLTS PROVIDED WITH THE REPLACEMENT ECM 2.3 CONTROL ARE SHORTER THAN THE BOLTS ORIGINALLY REMOVED FROM THE ECM 2.0 CONTROL AND MUST BE USED IF SECURE ATTACHMENT OF THE CONTROL TO THE MOTOR IS TO BE ACHIEVED. *DO NOT OVERTIGHTEN THE BOLTS.*

   7b. **IF REPLACING AN ECM 2.3 CONTROL WITH AN ECM 2.3 CONTROL**, the plastic tab and shorter through-bolts are not needed. The control can be oriented in two positions 180° apart. **MAKE SURE THE ORIENTATION SELECTED FOR REPLACING THE CONTROL ASSURES THE CONTROL'S CABLE CONNECTORS WILL BE LOCATED DOWNWARD IN THE APPLICATION SO THAT WATER CANNOT RUN DOWN THE CABLES AND INTO THE CONTROL.** Simply orient the new control to the motor's endshield, insert bolts and tighten. ***DO NOT OVERTIGHTEN THE BOLTS.***

   7c. **IF REPLACING AN ECM 2.0 CONTROL WITH AN ECM 2.0 CONTROL** *(it is recommended that ECM 2.3 controls be used for all replacements),* the new control must be attached to the motor using through bolts identical to those removed with the original control. ***DO NOT OVERTIGHTEN THE BOLTS.***

8. Reinstall the blower/motor assembly into the HVAC equipment. Follow the manufacturer's suggested procedures.
9. Plug the 16-pin control plug into the motor. The plug is keyed. Make sure the connector is properly seated and latched.
10. Plug the 5-pin power connector into the motor. Even though the plug is keyed, **OBSERVE THE PROPER ORIENTATION. DO NOT FORCE THE CONNECTOR.** It plugs in very easily when properly oriented. **REVERSING THIS PLUG WILL CAUSE IMMEDIATE FAILURE OF THE CONTROL MODULE.**
11. Final installation check. Make sure the motor is installed as follows:
    a. Unit is as far INTO the blower housing as possible.
    b. Belly bands are not on the control module or covering vent holes.
    c. Motor connectors should be oriented between the 4 o'clock and 8 o'clock positions when the blower is positioned in its final location and orientation.
    d. Add a drip loop to the cables so that water cannot enter the motor by draining down the cables. *Refer to Figure 27.*

The installation is now complete. Reapply the AC power to the HVAC equipment and verify that the new motor control module is working properly. Follow the manufacturer's procedures for disposition of the old control module.

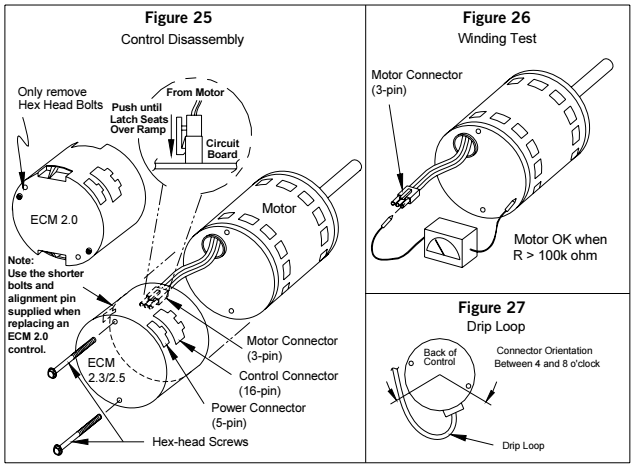

FAN BLADE SETTING DIMENSIONS

Any service work requiring removal or adjustment in the fan and/or motor area will require that the dimensions in Table 7 be checked and blade adjusted in or out of the motor shaft accordingly.

FIGURE 28
Fan Blade Setting

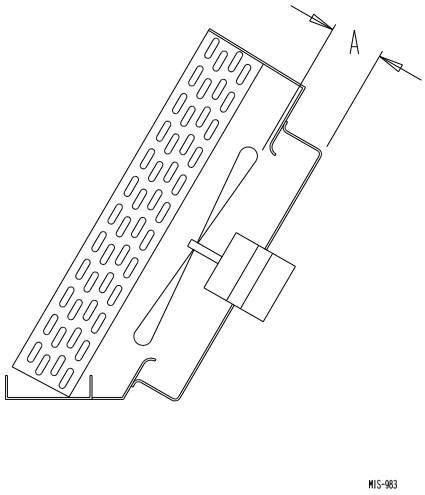

R-410A REFRIGERANT CHARGE

This unit was charged at the factory with the quantity of refrigerant listed on the serial plate. AHRI capacity and efficiency ratings were determined by testing with this refrigerant charge quantity.

The following pressure tables show nominal pressures for the units. Since many installation specific situations can affect the pressure readings, this information should only be used by certified technicians as a guide for evaluating proper system performance. They shall not be used to adjust charge. If charge is in doubt, reclaim, evacuate and recharge the unit to the serial plate charge.

TABLE 7
Fan Blade Dimension

MODEL	DIMENSION A (INCHES)
All Q**H2 Models	.750

TABLE 8
Indoor Blower Performance

Model	Rated ESP	① Max. ESP	② Rated CFM	③ Optional CFM	④ Continuous CFM	CFM @ Max. ESP
Q24H2 n	.10	0.5	800	N/A	800	700
Q30H2	.15	0.8	1000	N/A	1000	910
Q36H2	.15	0.8	1200	1000	1000	1175
Q42H2	.15	0.8	1200	1000	1000	1175
Q48H2	.15	0.8	1400	1100	1100	1175
Q60H2	.20	0.5	1550	1250	1100	1400

NOTE: These units are equipped with a variable speed (ECM) indoor motor that automatically adjusts itself to maintain approximately the same rate of indoor airflow in both heating and cooling, dry and wet coil conditions and at both 230/208 or 460 volts.

① Maximum ESP (inches WC) shown is with 1" thick disposable filter (reduced by .2 for 2" filter).

② Rated CFM for ducted applications – required for maximum performance rating. To obtain full CFM on models Q36H2, Q42H2, Q48H2 and Q60H2, connect the pink jumper wire (provided) to terminal #G2 and #Y on the low voltage terminal block located in the circuit breaker box.

③ Optional CFM – the unit is shipped from the factory set to operate at the optional CFM level shown. This provides lower operating sound levels for non-ducted, free discharge applications. This reduces system capacity performance by approximately 2% at the same energy efficiency.

④ Continuous fan CFM is the total air being circulated during continuous fan mode.

⑤ Model Q24H2 – when operating on 2nd stage heating the indoor air will increase to 1000 CFM.

TABLE 9
Cooling Pressure
(All Temperatures in Degrees F)

MODEL	RETURN AIR TEMP.	PRESSURE	① AIR TEMPERATURE ENTERING OUTDOOR COIL								
			75°	80°	85°	90°	95°	100°	105°	110°	115°
Q24H2	75 DB 62 WB	Low Side	118	119	121	122	125	128	132	135	138
		High Side	326	340	358	377	399	422	449	477	508
	80 DB 67 WB	Low Side	126	127	129	131	134	137	141	144	148
		High Side	334	349	367	387	418	433	460	489	521
	85 DB 72 WB	Low Side	130	131	134	136	139	142	146	149	153
		High Side	346	361	380	401	423	448	476	506	539
Q30H2	75 DB 62 WB	Low Side	124	125	126	127	129	131	134	137	139
		High Side	351	368	386	407	430	454	482	511	543
	80 DB 67 WB	Low Side	133	134	135	136	136	140	143	146	149
		High Side	360	377	396	417	442	466	494	524	557
	85 DB 72 WB	Low Side	138	139	140	141	143	145	148	151	154
		High Side	373	390	410	432	456	482	511	542	576
Q36H2	75 DB 62 WB	Low Side	131	132	133	134	136	137	138	140	142
		High Side	351	369	389	410	434	459	486	514	543
	80 DB 67 WB	Low Side	140	141	142	143	143	147	148	150	152
		High Side	360	378	399	421	448	471	498	527	557
	85 DB 72 WB	Low Side	145	146	147	148	150	152	153	155	157
		High Side	373	391	413	436	461	487	515	545	576
Q42H2	75 DB 62 WB	Low Side	126	128	130	132	133	134	135	136	136
		High Side	371	388	408	430	453	479	507	536	568
	80 DB 67 WB	Low Side	135	137	139	139	139	143	144	145	145
		High Side	380	398	418	441	471	491	520	550	583
	85 DB 72 WB	Low Side	140	142	144	146	147	148	149	150	150
		High Side	393	412	433	456	481	508	538	569	603
Q48H2	75 DB 62 WB	Low Side	123	125	128	130	133	136	139	143	147
		High Side	373	392	412	435	459	486	514	543	575
	80 DB 67 WB	Low Side	132	134	137	139	139	145	149	153	157
		High Side	383	402	423	446	458	498	527	557	590
	85 DB 72 WB	Low Side	137	139	142	144	147	150	154	158	162
		High Side	396	416	438	462	487	515	545	576	611
Q60H2	75 DB 62 WB	Low Side	123	123	124	124	126	127	129	131	133
		High Side	378	395	413	434	455	479	504	530	559
	80 DB 67 WB	Low Side	132	132	133	133	133	136	138	140	142
		High Side	388	405	424	445	467	491	517	544	573
	85 DB 72 WB	Low Side	137	137	138	138	140	141	143	145	147
		High Side	402	419	439	461	483	508	535	563	593

Low side pressure ± 4 psig
High side pressure ± 10 psig

Tables are based upon rated CFM (airflow) across the evaporator coil. If there is any doubt as to correct operating charge being in the system, the charge should be removed, system evacuated and recharged to serial plate instructions.

① 75°F outdoor temperature condenser fan motor is running on low speed.

TABLE 10
Heating Pressure
(All Temperatures in Degrees F)

MODEL	RETURN AIR TEMP.	PRESSURE	① AIR TEMPERATURE ENTERING OUTDOOR COIL												
			0	5	10	15	20	25	30	35	40	45	50	55	60
Q24H2	70	Low Side	35	42	49	57	64	72	79	86	94	101	109	117	124
		High Side	284	290	297	304	313	322	331	342	353	365	378	392	406
Q30H2	70	Low Side	44	47	52	56	62	68	75	82	90	99	108	118	129
		High Side	295	299	305	312	320	330	341	353	367	382	398	415	434
Q36H2	70	Low Side	28	38	48	57	65	72	79	85	91	96	100	104	107
		High Side	271	278	286	294	302	310	319	327	336	346	355	365	374
Q42H2	70	Low Side	30	38	46	54	61	68	76	83	90	96	103	109	115
		High Side	272	283	294	305	317	328	339	350	362	373	385	396	408
Q48H2	70	Low Side	27	36	46	54	63	71	78	85	91	97	103	108	113
		High Side	272	281	291	300	310	320	330	339	349	359	369	380	390
Q60H2	70	Low Side	7	19	31	42	52	61	69	76	83	89	94	98	101
		High Side	252	266	280	293	306	318	330	341	352	362	371	380	389

Low side pressure ± 4 psig
High side pressure ± 10 psig

Tables are based upon rated CFM (airflow) across the evaporator coil. If there is any doubt as to correct operating charge being in the system, the charge should be removed, system evacuated and recharged to serial plate instructions.

① 75°F outdoor temperature condenser fan motor is running on low speed.