INSTALLATION INSTRUCTIONS

Q-TEC™ SERIES
PACKAGED AIR CONDITIONER

Models:

Q24A2DA Q30A2DA Q36A2DA Q42A2DA Q48A2DA Q60A2DA
Q24A2DB Q30A2DB Q36A2DB Q42A2DB Q48A2DB Q60A2DB
Q24A2DC Q30A2DC Q36A2DC Q42A2DC Q48A2DC Q60A2DC

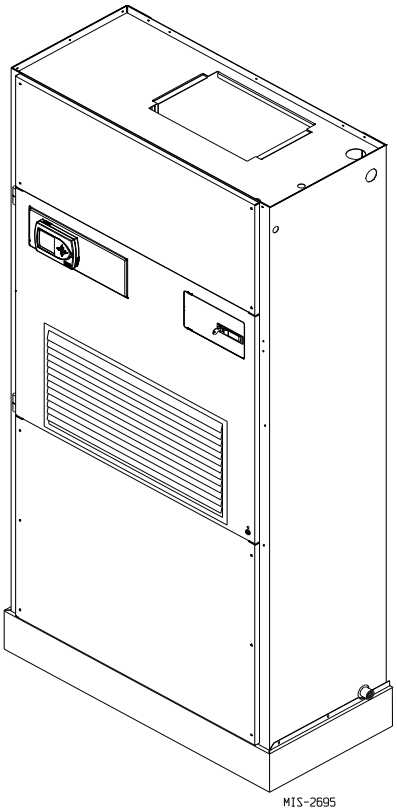

Bard®
SINCE 1914
Climate Control Solutions

Bard Manufacturing Company, Inc.
Bryan, Ohio 43506
www.bardhvac.com

Manual No.: 2100-602A
Supersedes: 2100-602
Date: 7-25-17

CONTENTS

Getting Other Information and Publications
For more information, contact these publishers:..... 3

Q-Tec General Information
Q-Tec Model Nomenclature 4
Shipping Damage 8
Unit Removal From Skid 8
Handling Unit After Removal From Skid 9
General 9
Minimum Installation Height..... 9
Duct Work 11
Filters 11
Fresh Air Intake..... 12
Service Light 12
Condensate Drain 12
Optional Rear Drain Kit 12
Separate Evaporator Drain Connection 12

Installation Instructions
Mounting the Unit..... 19
Wiring—Main Power 20
Wiring—Low Voltage Wiring 20
Optional Climate Controls Seq. of Op. .....20 & 21
Low Voltage Connections 21
General 21

Start Up
R-410A Refrgerant..... 27
Topping Off System Charge 27
Safety Practices..... 27
Description of Standard Equipment..... 28
Optional CFM (Q36A2, Q42A2, Q48A2 & Q60A2 Only) 28
Important Installer Note 28
Phase Monitor 28
Three Phase Scroll Compressor Start Up
Information.....28 & 29
Compressor Control Module..... 29
Adjustments..... 29
Service Hints .....29 & 30
Mist Eliminator Service 30
Vent Options .....30 & 31
Sequence of Operation..... 34
CRV / QERV Operation 34
Pressure Service Ports..... 34

Troubleshooting
Troubleshooting ECM™ Blower Motors 38-39
Fan Blade Setting Dimensions 40
Refrigerant Charge 40
Pressure Chart 41

Figures

Figure 1 Unit Dimensions 7
Figure 2 Air Seal Under Unit 8
Figure 3 Removal of Unit From Skid 8
Figure 4 Unit on Appliance Cart for Moving..... 9
Figure 5 Installation With Free Blow Plenum 10
Figure 6 Ducted Application 10
Figure 7 Supply Duct Connections.....11
Figure 8 Filter Location.....11
Figure 9 Optional Side Drain 13
Figure 10 Standard Rear Drain 13
Figure 11 Rear Drain (Top View)..... 13
Figure 12A Optional Rear Drain Kit 14
Figure 12B Optional Rear Drain Kit 15
Figure 12C Optional Rear Drain Kit 16
Figure 12D Optional Rear Drain Kit 17
Figure 13A Unit Mounting 18
Figure 13B Unit Mounting 18
Figure 14 Removing Locking Screws from Wheels.... 19
Figure 15 Component Location 20
Figure 16 Thermostat Plug Terminals 22
Figure 17 Thermostat Wiring Diagram "X" Option..... 23
Figure 18 Thermostat Wiring Diagram "E" Option..... 24
Figure 19 T-Stat Wiring Diagram "I" Option 25
Figure 20 T-Stat Wiring Diagram "J or K" Opt. 26
Figure 21 Fresh Air Damper Removal..... 32
Figure 22 QERV Removal..... 33
Figure 23 CO_2 Controller..... 34
Figure 24 Air Conditioning Mode Circuit Diagram..... 35
Figure 25 Dehumidification Mode Circuit Diagram..... 36
Figure 26 Control Disassembly 39
Figure 27 Winding Test..... 39
Figure 28 Drip Loop..... 39
Figure 29 Fan Blade Setting..... 40

Tables

Table 1 Factory Built-In Electric Heat Table 5
Table 2 Electrical Specifications..... 6
Table 3 Operating Voltage Range 20
Table 4 Wall Thermostats..... 22
Table 5A Troubleshooting..... 37
Table 5B Dehumidification Relay Logic Board 37
Table 6 Fan Blade Dimensions 40
Table 7 Subcooling @ Liquid Line 40
Table 8 Indoor Blower Performance..... 40
Table 9 Cooling Pressure..... 41

GETTING OTHER INFORMATION AND PUBLICATIONS

These publications can help you install the air conditioner or heat pump. You can usually find these at your local library or purchase them directly from the publisher. Be sure to consult current edition of each standard.

National Electrical Code ..... ANSI/NFPA 70

Standard for the Installation .....ANSI/NFPA 90A
of Air Conditioning and Ventilating Systems

Standard for Warm Air .....ANSI/NFPA 90B
Heating and Air Conditioning Systems

Load Calculation for ..... ACCA Manual J or
Winter and Summer Manual N
Air Conditioning

Low Pressure, Low Velocity .....ACCA Manual D or
Duct System Design Manual Q
Winter and Summer Air Conditioning

FOR MORE INFORMATION, CONTACT THESE PUBLISHERS:

ACCA **Air Conditioning Contractors of America**
1712 New Hampshire Avenue
Washington, DC 20009
Telephone: (202) 483-9370
Fax: (202) 234-4721

ANSI **American National Standards Institute**
11 West Street, 13th Floor
New York, NY 10036
Telephone: (212) 642-4900
Fax: (212) 302-1286

ASHRAE **American Society of Heating, Refrigeration, and Air Conditioning Engineers, Inc.**
1791 Tullie Circle, N.E.
Atlanta, GA 30329-2305
Telephone: (404) 636-8400
Fax: (404) 321-5478

NFPA **National Fire Protection Association**
Batterymarch Park
P.O. Box 9101
Quincy, MA 02269-9901
Telephone: (800) 344-3555
Fax: (617) 984-7057

Q-TEC MODEL NOMENCLATURE

Q 42 A 2 D A 10 X X V X X X

MODEL NUMBER
Q-Tec™

CAPACITY
24 - 2 Ton
30 - 2½ Ton
36 - 3 Ton
42 - 3½ Ton
48 - 4 Ton
60 - 5 Ton

AIR CONDITIONER

REVISION

DEHUMIDIFICATION REHEAT CYCLE

VOLTS & PHASE
A - 230/208/60/1
B - 230/208/60/3
C - 460/60/3

KW
0Z - 0KW
05 - 5KW
06 - 6KW
09 - 9KW
10 -10KW
12 -12KW
15 -15KW

FILTER OPTIONS
X - 1 inch Fiberglass (Standard)
F - 2 inch Fiberglass
P - 2 inch Pleated

COLOR
V - Platinum w/Slate Front (Vinyl)
X - Beige paint
4 - Gray paint

COIL OPTIONS
X - Standard
1 - Phenolic coated evaporator*
2 - Phenolic coated condenser
3 - Phenolic coated evaporator and condenser coil*

*and reheat if applicable

INTERNAL CONTROLS
X - Standard
- High Pressure Switch
- Low Pressure Switch
- Compressor Control Module w/Time Delay

J - Alarm Relay + LAC + Above

VENTILATION OPTIONS
X - Barometric Fresh Air Damper (Standard)
B - Blank-off Plate
V - Commercial Ventilator - Motorized w/Exhaust Spring Return
P - Commercial Ventilator - Motorized w/Exhaust Power Return
R - Energy Recovery Ventilator w/Independent Intake & Exhaust Control

CLIMATE CONTROL OPTIONS
X - None ①
E - Electronic/Prog/Humidistat
I - Electronic Prog/Humidistat/CO_2
J - CS9BE-THO (BACnet IP or Ethernet)
K - CS9BE-THOC with CO_2 (BACnet IP or Ethernet)

NOTE: ① If "X" control option is selected, then thermostat and humidistat, if applicable, or DDC control system must be field supplied.

TABLE 1
FACTORY BUILT-IN ELECTRIC HEAT TABLE

Models	Q24A2DA Q30A2DA		Q24A2DB		Q30A2DB		Q24A2DC	Q30A2DC	Q36A2DA Q42A2DA Q48A2DA		Q36A2DB Q42A2DB Q48A2DB		Q36A2DC Q42A2DC Q48A2DC	Q60A2DA		Q60A2DB		Q60A2DC
	240V-1	208V-1	240V-1	208V-1	240V-1	208V-1	480V-3	480V-3	240V-1	208V-1	240V-1	208V-1	480V-3	240V-1	208V-1	240V-1	208V-1	480V-3
KW	BTUH	BTUH	BTUH	BTUH	BTUH	BTUH	BTUH	BTUH	BTUH	BTUH	BTUH	BTUH	BTUH	BTUH	BTUH	BTUH	BTUH	BTUH
5.0	16,380	12,290							16,380	12,290								
6.0			20,500	15,360	20,500	15,360	20,500	20,500			20,500	15,360	20,500					
9.0			30,700	23,000	30,700	23,000	30,700	30,700			30,700	23,000	30,700			30,700	23,000	30,700
10.0	32,670	24,570							32,670	24,570				32,670	24,570			
12.0					41,000	30,700		41,000										
15.0									49,150	36,860	49,150	36,860	49,150	49,150	36,860	49,150	36,860	49,150

TABLE 2
ELECTRICAL SPECIFICATIONS

MODEL	Rated Volts & Phase	No. Field Power Circuits	Single Circuit				Dual Circuit							
			③ Minimum Circuit Ampacity	① Maximum External Fuse or Ckt. Brkr.	② Field Power Wire Size	② Ground Wire	③ Minimum Circuit Ampacity		① Maximum External Fuse or Ckt. Breaker		② Field Power Wire Size		② Ground Wire Size	
							Ckt. A	Ckt. B	Ckt. A	Ckt. B	Ckt. A	Ckt. B	Ckt. A	Ckt. B
Q24A2DA0Z	230/208-1	1	22	30	10	10								
A05		1	30	30	10	10								
A10		1	55	60	6	10								
Q24A2DB0Z	230/208-3	1	17	20	12	12								
B06		1	25	25	10	10								
B09		1	33	35	8	10								
Q24A2DC0Z	460-3	1	10	15	14	14								
C06		1	12	15	14	14								
C09		1	17	20	12	12								
Q30A2DA0Z	230/208-1	1	25	35	8	10								
A05		1	32	35	8	10								
A10		1	57	60	6	10								
Q30A2DB0Z	230/208-3	1	18	25	10	10								
B06		1	25	25	10	10								
B09		1	34	35	8	10								
B12		1	43	45	6	10								
Q30A2DC0Z	460-3	1	11	15	14	14								
C06		1	14	15	14	14								
C09		1	18	20	12	12								
C12		1	23	25	10	10								
Q36A2DA0Z	230/208-1	1	29	45	8	10								
A05		1	34	45	8	10								
A10		1	58	60	6	8								
A15		1 or 2	84	90	4	8	58	25	60	25	6	10	10	10
Q36A2DB0Z	230/208-3	1	21	30	10	10								
B06		1	26	30	10	10								
B09		1	35	35	8	10								
B15		1	53	60	6	10								
Q36A2DC0Z	460-3	1	12	15	14	14								
C06		1	14	15	14	14								
C09		1	18	20	12	12								
C15		1	27	30	10	10								
Q42A2DA0Z	230/208-1	1	35	50	8	10								
A05		1	35	50	8	10								
A10		1	58	60	6	8								
A15		1 or 2	83	90	4	8	58	25	60	25	6	10	10	10
Q42A2DB0Z	230/208-3	1	26	35	8	10								
B06		1	26	35	8	10								
B09		1	35	35	8	10								
B15		1	53	60	6	10								
Q42A2DC0Z	460-3	1	13	15	14	14								
C06		1	14	15	14	14								
C09		1	18	20	12	12								
C15		1	27	30	10	10								
Q48A2DA0Z	230/208-1	1	37	50	8	10								
A05		1	37	50	8	10								
A10		1	58	60	6	10								
A15		1 or 2	83	90	4	8	58	25	60	25	8	10	10	10
Q48A2DB0Z	230/208-3	1	28	40	8	10								
B06		1	28	40	8	10								
B09		1	35	40	8	10								
B15		1	53	60	6	10								
Q48A2DC0Z	460-3	1	14	20	12	12								
C06		1	14	20	12	12								
C09		1	18	20	12	12								
C15		1	27	30	10	10								
Q60A2DA0Z	230/208-1	1	45	60	8	10								
A10		1	59	60	6	10								
A15		1 or 2	84	90	4	8	59	25	60	25	8	10	10	10
Q60A2DB0Z	230/208-3	1	31	45	8	10								
B09		1	36	45	8	10								
B15		1	55	60	6	10								
Q60A2DC0Z	460-3	1	16	20	12	12								
C09		1	19	20	12	12								
C15		1	28	30	10	10								

① Maximum size of the time delay fuse or HACR type circuit breaker for protection of field wiring conductors.

② Based on 75°C copper wire. All wiring must conform to the National Electrical Code and all local codes.

③ These "Minimum Circuit Ampacity" values are to be used for sizing the field power conductors. Refer to the National Electric Code (latest revision), article 310 for power conductor sizing.

CAUTION: When more than one field power conductor circuit is run through one conduit, the conductors must be derated. Pay special attention to Note 8 of Table 310 regarding Ampacity Adjustment Factors when more than three conductors are in a raceway.

FIGURE 1
UNIT DIMENSIONS

DIMENSION CHART					
UNIT	DIM. A	DIM. B	DIM. C	DIM. D	DIM. E
Q24A	7.625	42.000	30.000	30.000	43.000
Q30A					
Q36A					
Q42A					
Q48A	10.625	48.000	40.000	40.000	49.000
Q60A					

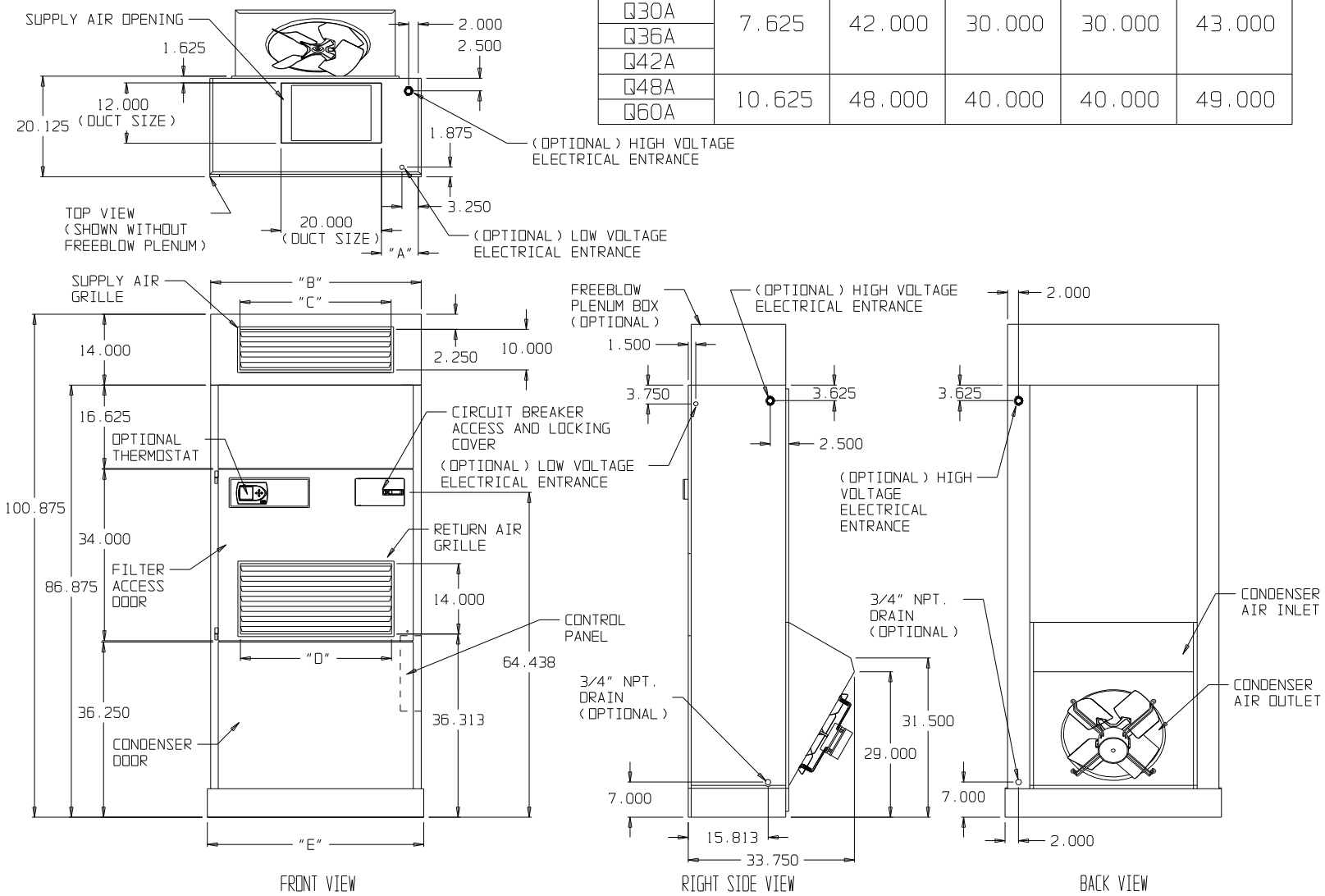

SHIPPING DAMAGE

Upon receipt of equipment, the carton should be checked for external signs of shipping damage. The skid must remain attached to the unit until the unit is ready for installation. If damage is found, the receiving party must contact the last carrier immediately, preferably in writing, requesting inspection by the carrier's agent.

UNIT REMOVAL FROM SKID

⚠ WARNING

This unit is heavy and requires more than one person to handle and remove from the skid. Check unit wheels to ensure that wheels are locked before removing from skid. Extreme caution must be taken to prevent injury to personnel and damage to the unit.

It is recommended that the unit not be removed from the skid with a forklift since the air seal under the unit could be damaged. See Figure 2.

The shipping brackets on each side of the unit must be removed and discarded. See Figure 3-A. The return air grille panel can be removed to provide a place to hold the unit. The unit can be slid forward on the skid until the front wheels hang over the edge of the skid. See Figure 3-B. The unit can be tipped forward and slid down the edge of the skid until the front wheels touch the ground. See Figure 3-C. The wheels will not roll. They are shipped from the factory locked so they will not roll. The back of the skid will have to be held down to keep it from tipping up. The skid can be slid out from under the unit. The unit can then be set upright.

FIGURE 2
AIR SEAL UNDER QTEC UNIT

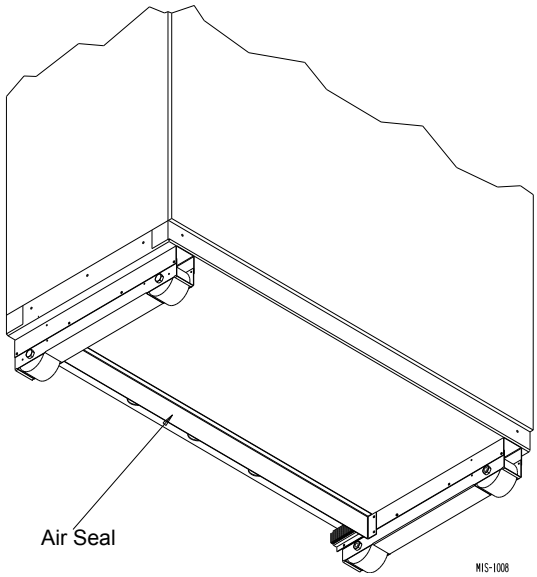

FIGURE 3
REMOVAL OF UNIT FROM SKID

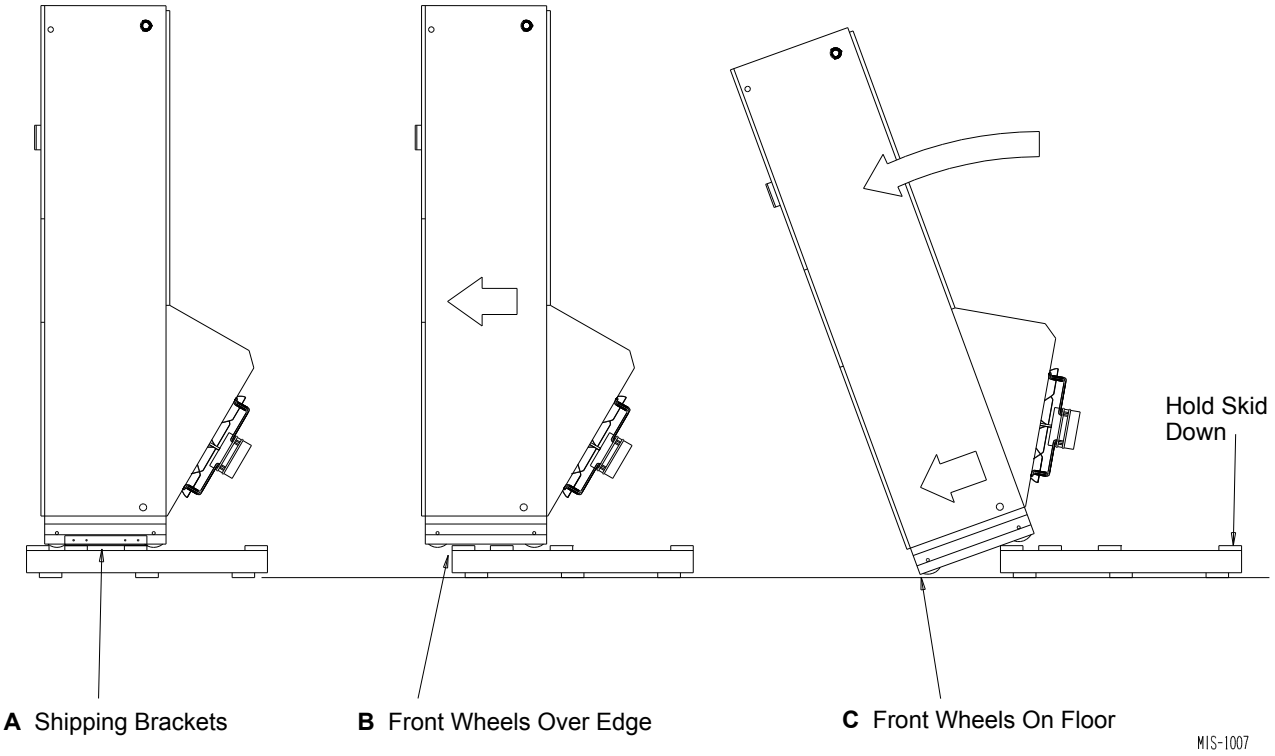

HANDLING UNIT AFTER REMOVAL FROM SKID

⚠ WARNING

Exercise extreme caution when pushing the unit on the rollers. Handle and push from the lower 1/3 of the unit. Insure that debris is not on the floor where the unit is to be moved on the rollers. Failure to do so could result in the unit tipping over and causing bodily injury and/ or damage to the unit.

The unit will have to be turned sideways and removed from the skid to fit through a 36" doorway. If the door height allows, the unit can be slid sideways through the door.

If the unit can not be slid through the door, then the unit will have to be put on a cart and tipped down to roll through the door. It is recommended that an appliance cart by used with a strap to hold the unit on the cart. The wheels of the unit ***must be locked***. If the wheels were allowed to roll, the unit could roll off the cart. ***The unit should always be carted from the left side***. This is the side where the compressor is located. See Figure 4.

FIGURE 4
UNIT ON APPLIANCE CART

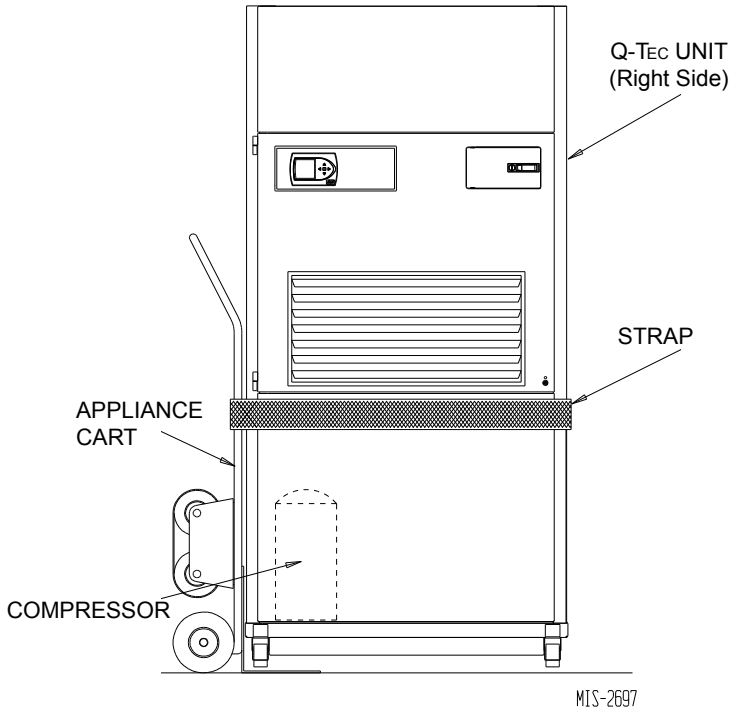

The blade of the appliance cart should be slid under the wheels of the unit. The strap of the appliance cart should be placed around the unit and strapped tightly. Help will be required to tip the unit back onto the cart. The unit can be leaned far enough back to be rolled through the door. Be careful when setting the unit back up to keep from damaging the unit.

GENERAL

The equipment covered in this manual is to be installed by trained, experienced service and installation technicians.

The unit is designed for use with or without duct work. For use without duct work, Plenum Box QPB42 is recommended.

These instructions explain the recommended method to install the air cooled self-contained unit and the electrical wiring connections to the unit.

These instructions and any instructions packaged with any separate equipment required to make up the entire air conditioning system should be carefully read before beginning the installation. Note particularly “Start Procedure” and any tags and/or labels attached to the equipment.

While these instructions are intended as a general recommended guide, they do not supersede any national and/or local codes in any way. Authorities having jurisdiction should be consulted before the installation is made. See Page 3 for information on codes and standards.

Size of unit for a proposed installation should be based on heat loss calculation made according to methods of Air Conditioning Contractors of America (ACCA). The air duct should be installed in accordance with the Standards of the National Fire Protection Systems of Other Than Residence Type, NFPA No. 90A, and Residence Type Warm Air Heating and Air Conditioning Systems, NFPA No. 90B. Where local regulations are at a variance with instructions, installer should adhere to local codes.

MINIMUM INSTALLATION HEIGHT

The minimum installation height of the unit with a Free Blow Plenum is 8 ft. 6 in. This provides enough clearance for the plenum to be removed. See Figure 5.

The minimum installation height for ducted applications is 8 ft. 4½ in. This provides enough clearance to install the duct work. See Figure 6.

FIGURE 5
INSTALLATION WITH FREE BLOW PLENUM

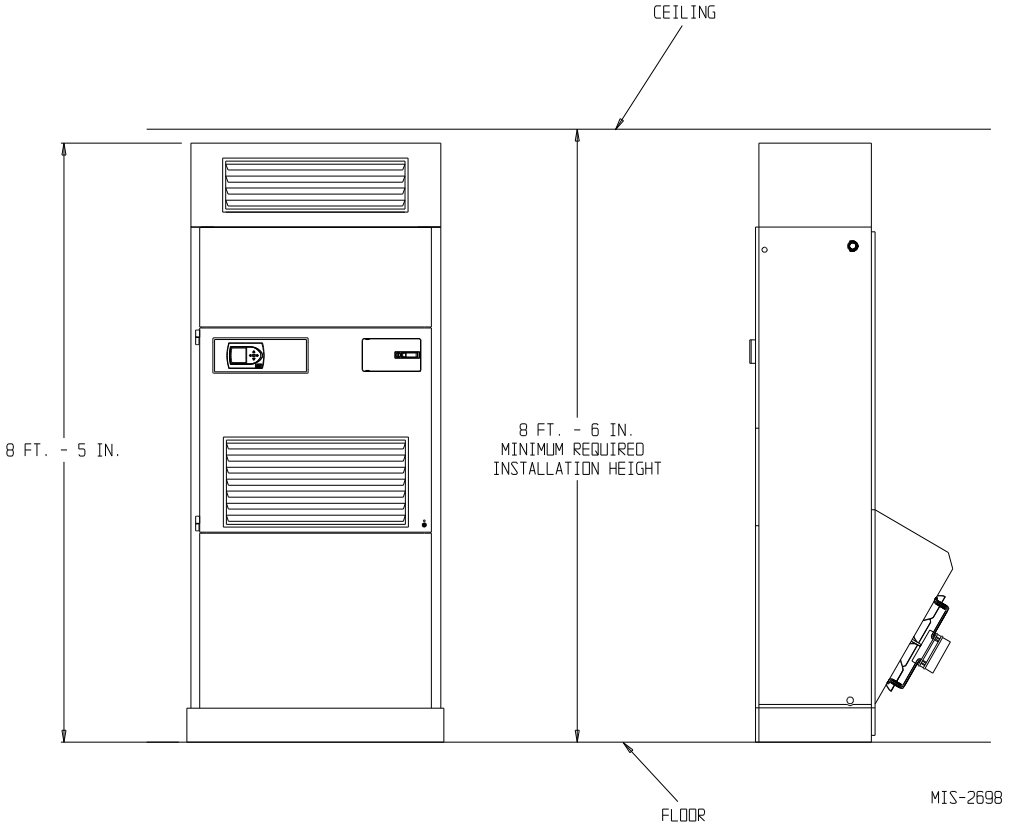

FIGURE 6
DUCTED APPLICATION

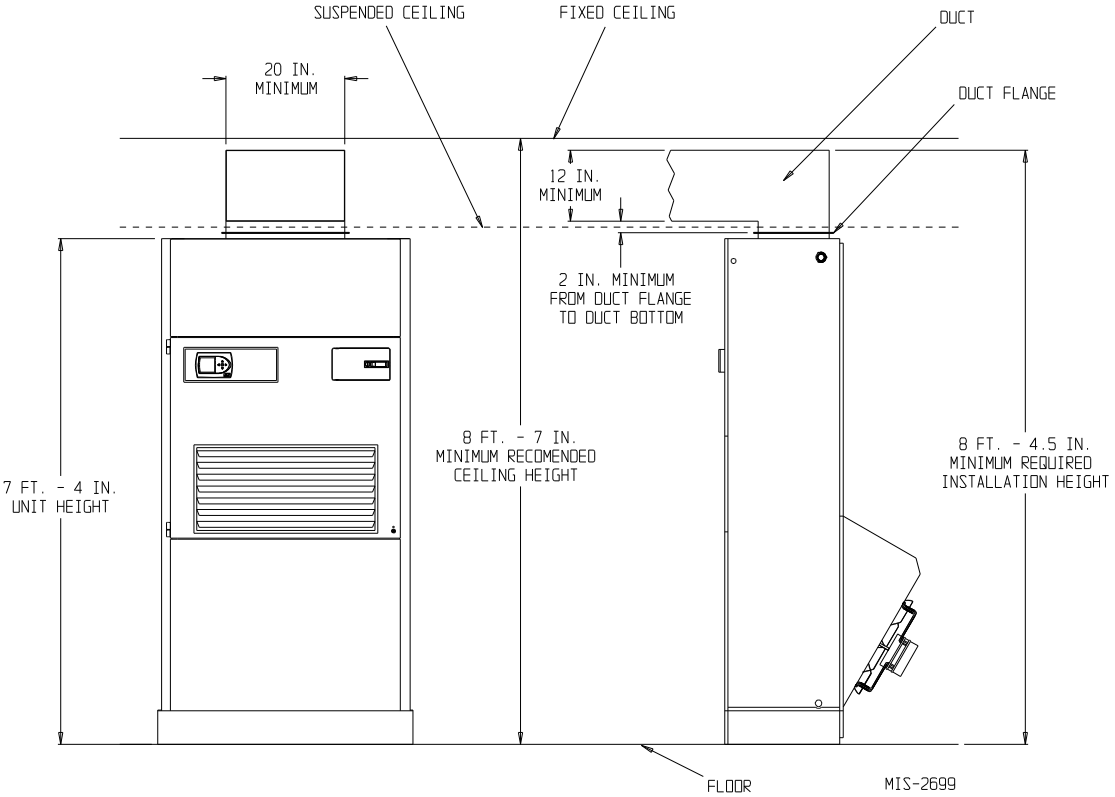

DUCT WORK

All duct work must be properly sized for the design airflow requirement of the equipment. Air Conditioning Contractors of America (ACCA) is an excellent guide to proper sizing. All duct work or portions thereof not in the conditioned space should be properly insulated in order to both conserve energy and prevent condensation or moisture damage. When duct runs through unheated spaces, it should be insulated with a minimum of one inch of insulation. Use insulation with a vapor barrier on the outside of the insulation. Flexible joints should be used to connect the duct work to the equipment in order to keep the noise transmission to a minimum.

The Q-Tec series unit has provision to attach a supply air duct to the top of the unit. Duct connection size is 12 inches x 20 inches. The duct work is field supplied and must be attached in a manner to allow for ease of removal when it becomes necessary to slide the unit out from the wall for service. See Figure 7 for suggested attachment method.

The Q-Tec series units are designed for use with free return (non-ducted) and either free blow with the use of QPB Plenum Box or a duct supply air system.

The QPB and QPBHW Plenum Box mounts on top of the unit and has both vertically and horizontally adjustable louvers on the front discharge grille.

For hot water coil option a QPBHWxx-F for free blow or QPBHWxx-D for ducted airflow is used.

When used with a ducted supply, a QCX Cabinet Extension can be used to conceal the duct work above the unit to the ceiling. This extends 20" above the unit for a total height above the floor of 10'-7/8". The unit is equipped with a variable speed indoor blower motor which increases in speed with an increase in duct static pressure. The unit will therefore deliver proper rated airflow up to the maximum ESP shown in Table 8. However, for quiet operation of the air system, the duct static should be kept as low as practical, within the guidelines of good duct design.

FILTERS

Two 1-inch throw away filters [(1) 16x16 and (1) 16x20] are supplied with each unit. The filters slide into filter brackets. Refer to Figure 8.

The filters are serviced from the inside of the building by opening the hinged door. This door is attached by T-25 Torx screws and one locking latch.

The internal filter brackets are adjustable to accommodate 2-inch filters. The tabs for the 1-inch filters must be bent down to allow the 2-inch filters to slide in place.

FIGURE 7
SUPPLY DUCT CONNECTIONS

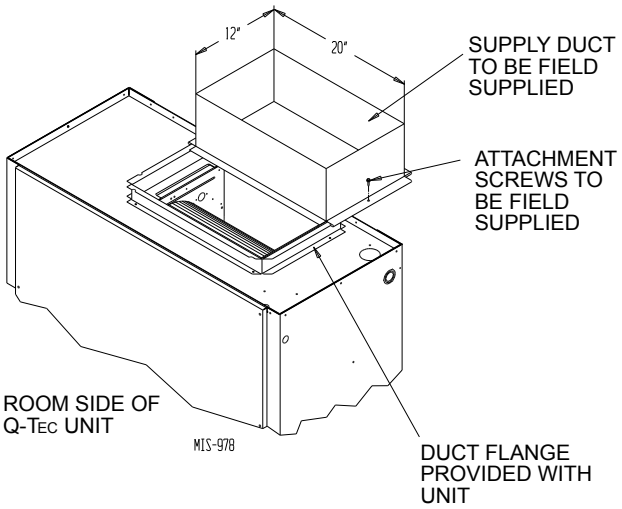

NOTE: Unit cabinet, supply air duct and free blow plenum are approved for "0" clearance to combustible material.

FIGURE 8
FILTER LOCATION

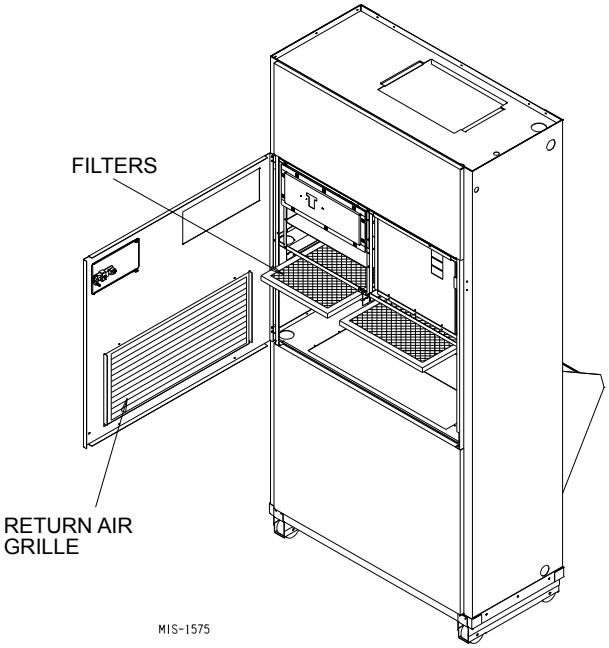

FRESH AIR INTAKE

This unit is equipped with a fresh air damper assembly. The damper blade is locked in the closed position when the unit is shipped from the factory. To allow the damper to operate remove the two plastic locking pins, one on each end of the blade. This will allow for maximum fresh airflow. The damper blade will now open when the indoor blower is operating. If less than maximum fresh airflow is required, reinsert the plastic pins to limit damper blade opening to desired level. Two extra pins are provided (taped to the inside of the assembly) which may be used to hold the blade in some position other than minimum or maximum position. This fresh air assembly is located in the rear of the unit and to gain access to make these adjustments remove the air filter service door.

All capacity, efficiency and cost of operation information as required for Department of Energy "Energyguide" Fact Sheets are based upon the fresh air blank-off plate in place and is recommended for maximum energy efficiency.

The blank-off plate is available upon request from the factory and is installed in place of the fresh air damper shipped with each unit.

For details on energy recovery ventilation see separate section.

SERVICE LIGHT

The unit is equipped with a service light, which signals the user that service is required. The light is located in the upper control panel and is visible only when the hinged service/filter access door is open.

The ***Service Unit*** light indicates that the unit has been shut off by a high or low pressure device. This indicates that the unit needs to be serviced.

CONDENSATE DRAIN

There are two drain connections on the unit. The rear drain is the primary drain, and is located on the right lower rear panel of the unit. The optional side drain is located on the bottom right side of the unit. The side drain is shipped with a plug installed.

The ***side drain*** requires a water trap for proper drainage. See Figure 9. The drain can be routed through the floor or through the wall. ***If the drain is to be routed through an unconditioned space, it must be protected from freezing***. The drain line must be able to be removed from the unit if it is necessary to remove the unit from the wall. When the side drain is used, the plug must be removed and installed in the rear drain outlet.

The ***rear drain*** can be used with wall thickness of up to 10 inches where a water trap can be installed between the unit and the interior wall. See Figure 10. The trap cannot extend beyond the edge of the unit or it will interfere with the wall mounting bracket. The drain can be routed through the floor or through the wall. If the drain is routed through the wall, the drain line must be positioned such that it will not interfere with the sleeve flange or the grille. See Figure 11. ***If the drain is to be routed through an unconditioned space, it must be protected from freezing.***

OPTIONAL REAR DRAIN KITS

Optional Rear Drain Kit, Bard Model QCDS48A, is also available for these products. The optional rear drain kit offers multiple benefits that include the following:

- Allows unit to be rolled away from the sleeve without having to disconnect any hard plumbing connections.
- Allows indoor coil condensate to be easily connected to Rear Drain Box while bypassing the outdoor coil drain pan. This aids in minimizing the potential for biological growth to occur by minimizing the standing water and exposing it to warm temperatures.

See Figures 12A, 12B, 12C and 12D.

The drain box permanently mounts onto the wall sleeve and is then either piped directly outdoors, or can be piped vertically. The Q-Tec unit is then equipped with fittings on the rear of the unit that slide into the drain box as it is wheeled towards the wall sleeve.

NOTE: *On models equipped with a refrigerant subcooler in the lower drain pan may experience a 2-3% decrease in cooling performance and efficiency when the indoor condensate is routed around the outdoor coil drain pan/subcooler assembly. Unit rated performance and efficiency are with the indoor condensate routed to the outdoor coil pan.*

There is also a heated version of the rear drain box available (Model #QCDS48H) for installation in northern climates where freezing may occur.

SEPARATE EVAPORATOR DRAIN CONNECTION (OPTIONAL)

A knockout is provided in the back right corner of the units for use when draining the evaporator drain pan separately from the condenser. This knockout is 5 inches above the back condenser drain opening. To utilize a separate evaporator drain connection remove the knockout and route the existing evaporator drain hose out this knockout and then to an appropriate drain line.

FIGURE 9
OPTIONAL SIDE DRAIN (SIDE VIEW) INSTALLATION

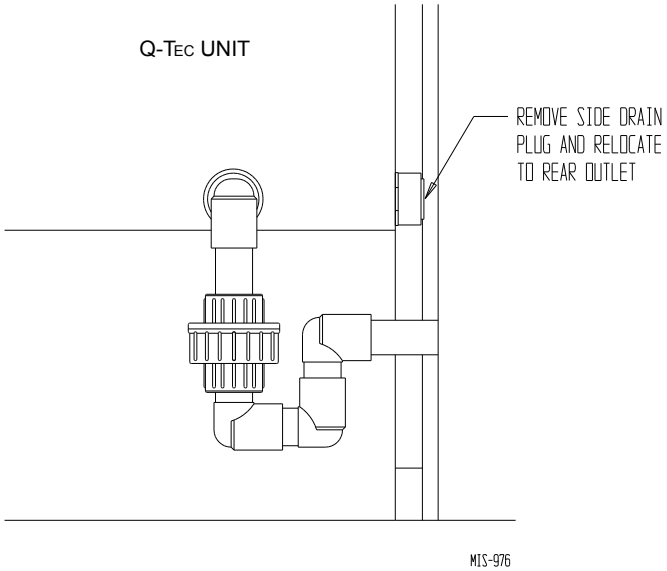

FIGURE 10
STANDARD REAR DRAIN

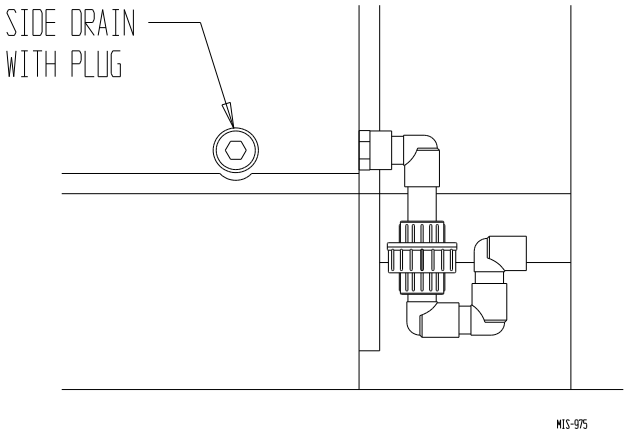

FIGURE 11
REAR DRAIN (TOP VIEW)

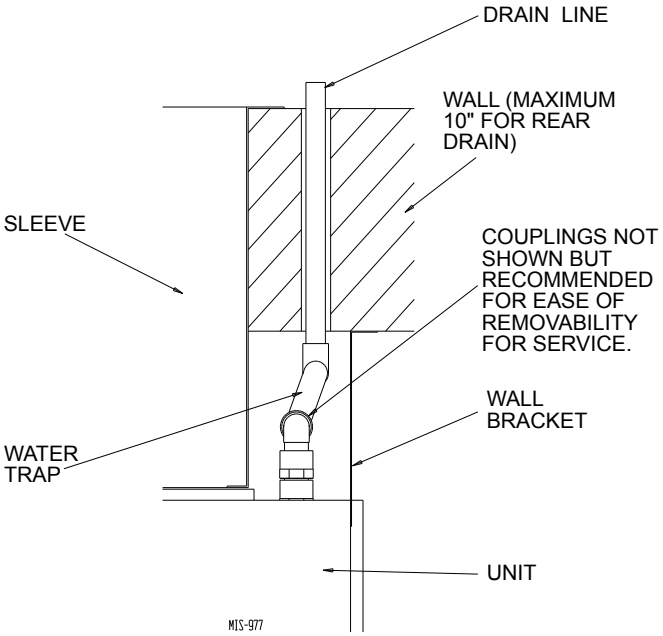

FIGURE 12A

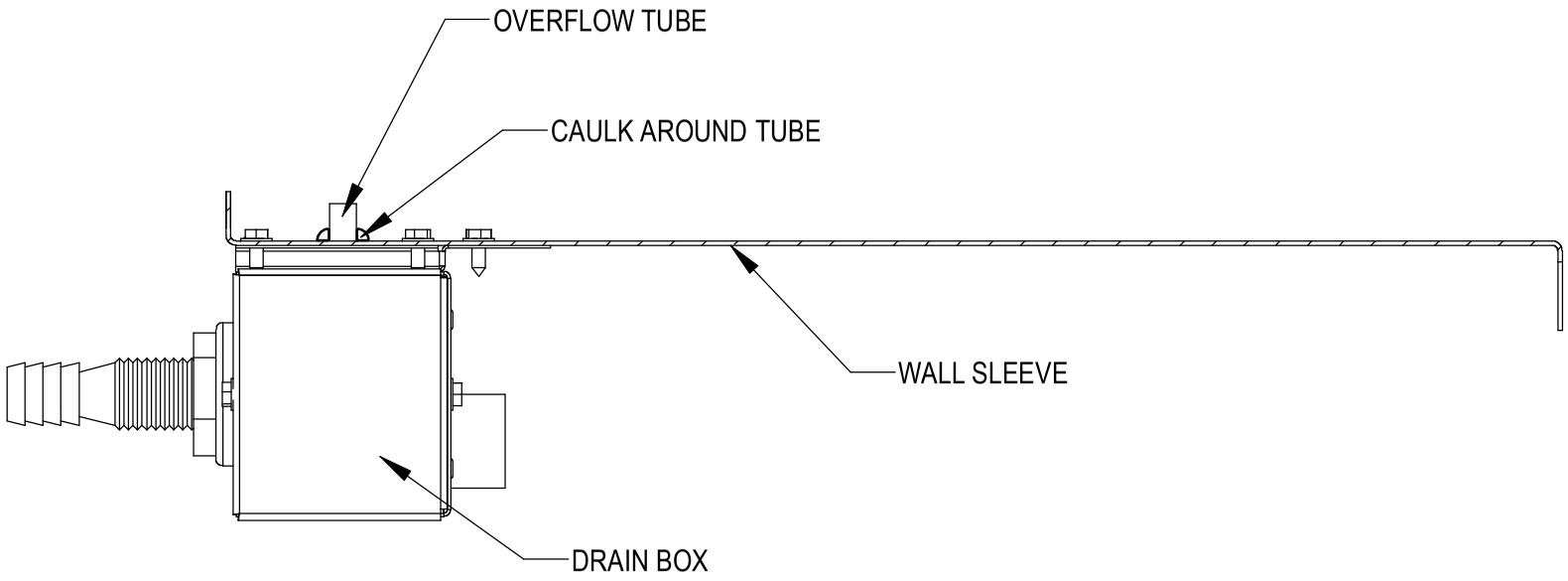

MIS-2469

FIGURE 12B

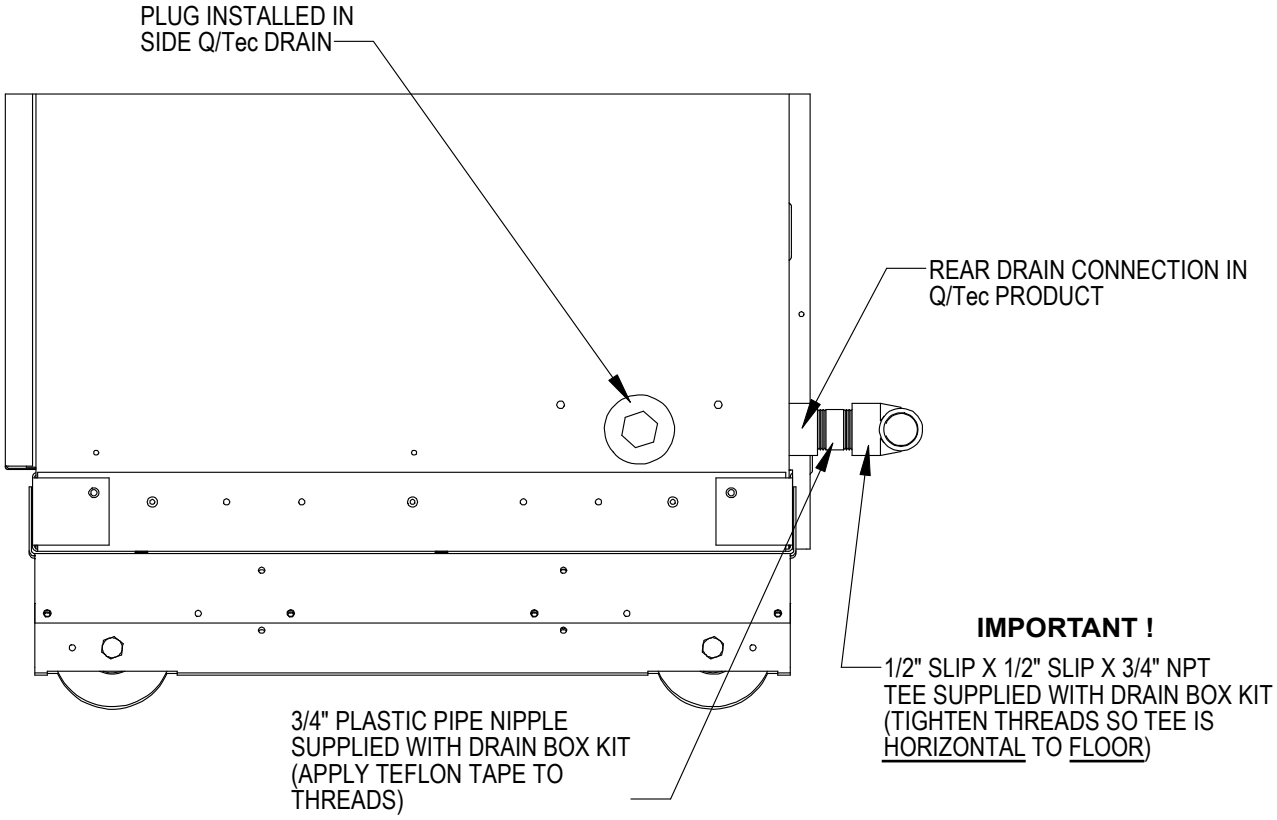

MIS-2470

FIGURE 12C

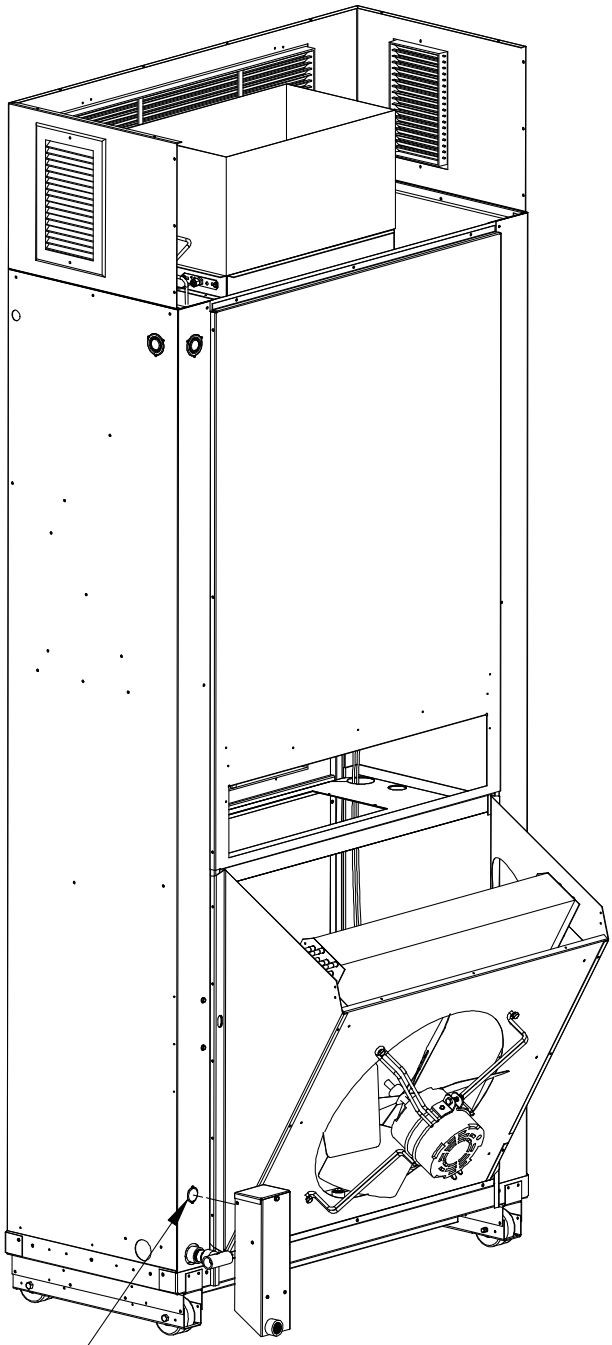

MIS-2471

FIGURE 12D

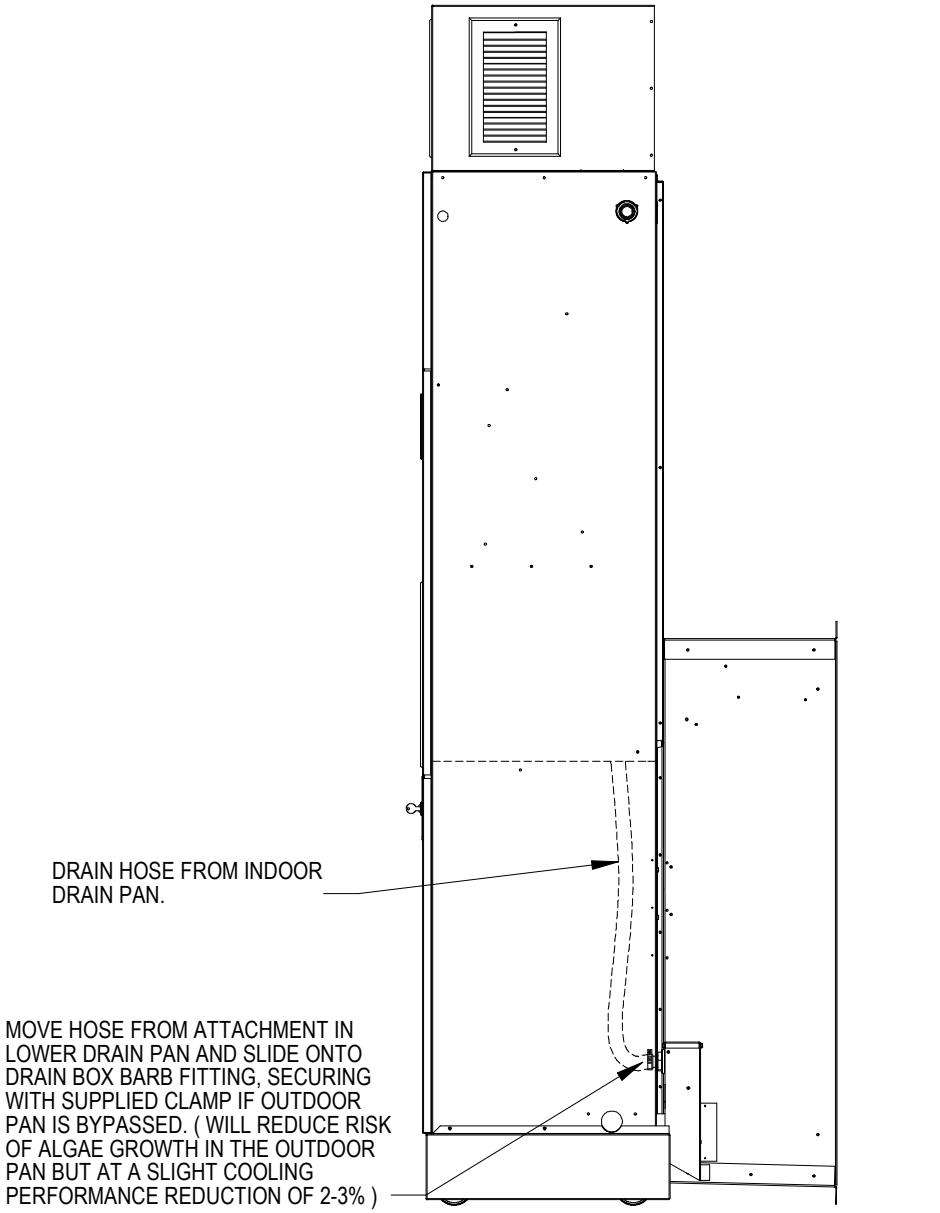

MIS-2472

FIGURE 13A
UNIT MOUNTING

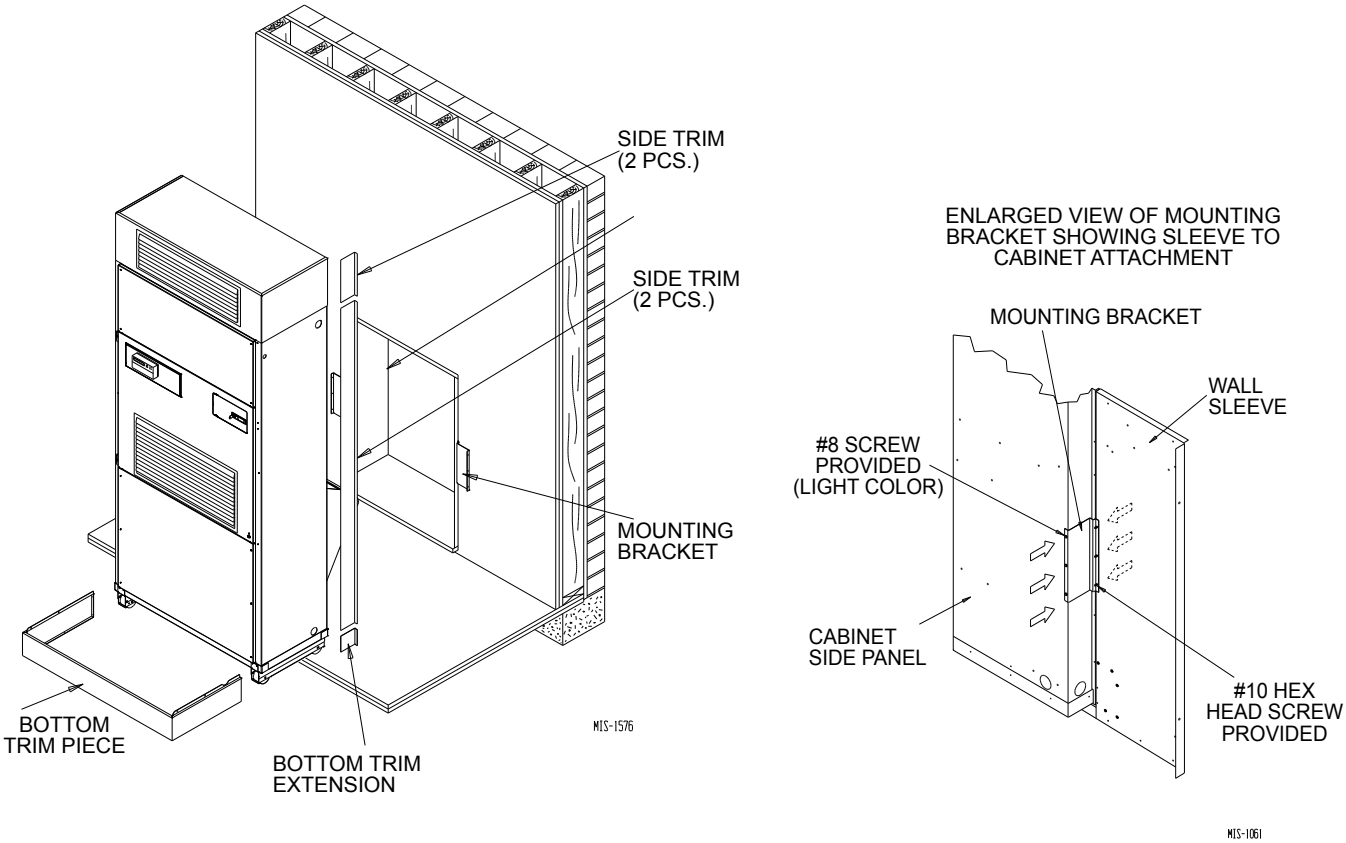

FIGURE 13B
UNIT MOUNTING

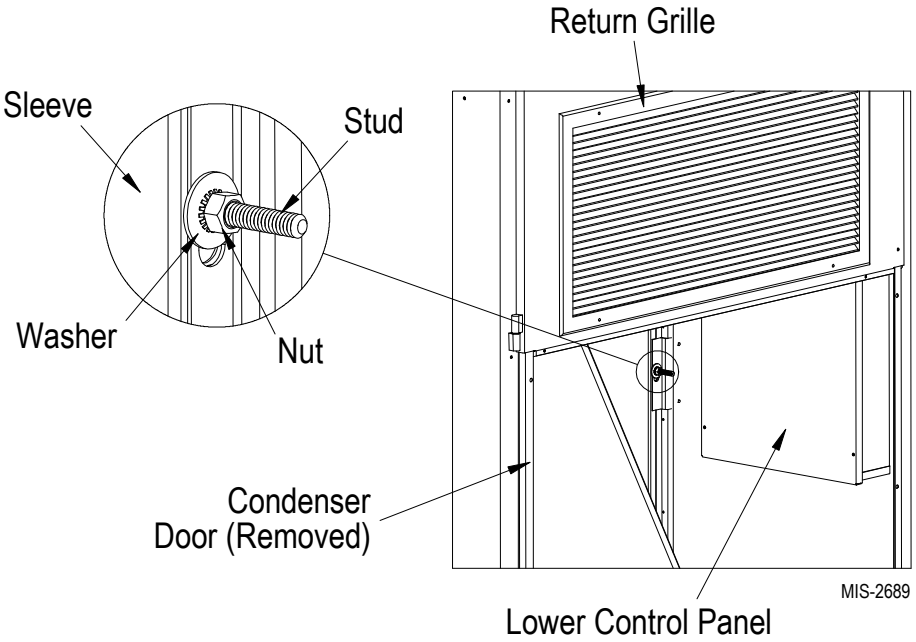

MOUNTING THE UNIT

When installing a Q-TEC unit near an interior wall on the left side, a minimum of 8 inches is required; 12 inches is preferred.

When installing a Q-TEC unit near an interior wall on the right side, a minimum of 18 inches is required as additional space is required to connect the side drain. If the rear condensate drain kit QCDS48 is used the minimum can be reduced to 8 inches.

This clearance is required to allow for the attachment of the unit to the sleeve and side trim pieces to the wall.

This unit is to be secured to the wall sleeve with mounting brackets provided. The unit itself, the supply duct and the free blow plenum are suitable of "0" clearance to combustible material.

Following are the steps for mounting the Q-TEC. For reference see Figure 13A for external mounting bracket or 13B for internal bolt secured bracket (recommended).

1. Attach mounting brackets to the wall sleeve with screws provided. Either use external mounting bracket (Fig. 13A) or internal bolt bracket (Fig. 13B).
2. Position the unit in front of the sleeve with the condenser section toward the sleeve.
3. Remove the locking screws from the wheels. Refer to Figure 14.
4. Roll the unit into the sleeve. Make sure to check both sides of the unit as it is being rolled to keep it centered in the sleeve. Also check the alignment to the mounting brackets. This unit must be level from side to side. If adjustments are necessary, shim up under the rollers with sheets of steel or any substance that is not affected by moisture.
5. Make sure the gasket on the rear of the unit is touching the sleeve across the top and down both sides. This is a rain water seal.
6. Secure the mounting brackets to the unit with screws provided, #10 hex head sheet metal screws (Figure 13A) or use nut and washer to secure sleeve (Figure 13B).
7. Bottom trim extensions are provided for use when wall is less than 14 inches but greater than 10.5 inches. Secure to wall with screws (not provided).
8. Attach the bottom trim piece to the unit with the screws provided (dark colored).
9. Position side trim pieces to wall and attach with field supplied screws. There are two long pieces and two short pieces supplied. The long pieces are to enclose the gap behind the unit. The short pieces are to fill the gap behind the cabinet extension or the free blow plenum box. They may be cut to suit your ceiling height or overlap the unit side trim. There is sufficient length to trim up to a 10'2" ceiling.

NOTE: If the exterior wall thickness is between 5 inches to 10.5 inches, a side trim extension piece kit, model QSTX42, is available.

FIGURE 14
REMOVING LOCKING SCREWS FROM WHEELS

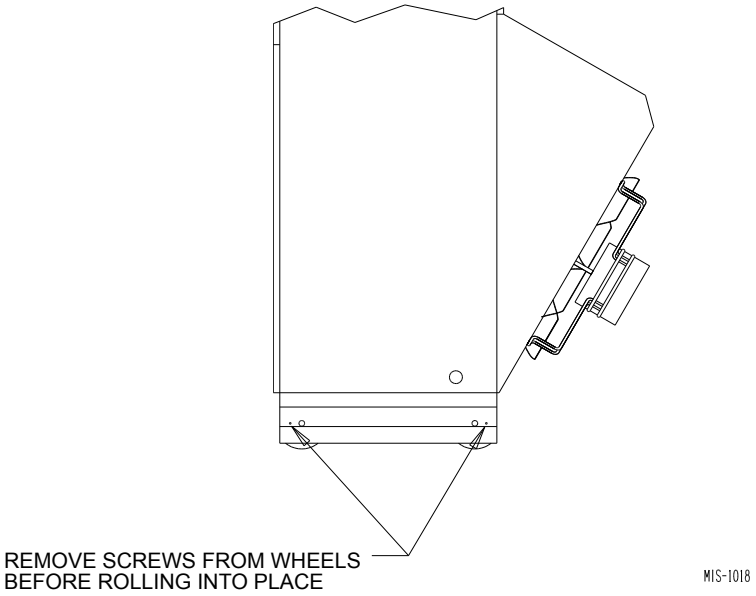

WIRING – MAIN POWER

Refer to the unit rating plate and/or Table 2 for wire sizing information and maximum fuse or "HACR Type" circuit breaker size. Each unit is marked with a "Minimum Circuit Ampacity". This means that the field wiring used must be sized to carry that amount of current. Depending on the installed KW of electric heat, there may be two field power circuits required. If this is the case, the unit serial plate will so indicate. All models are suitable only for connection with copper wire. Each unit and/or wiring diagram will be marked "Use Copper Conductors Only". These instructions ***MUST BE*** adhered to. Refer to the National Electrical Code (NEC) for complete current carrying capacity data on the various insulation grades of wiring material. All wiring must conform to NEC and all local codes.

The electrical data lists fuse and wire sizes (75°C copper) for all models, including the most commonly used heater sizes. Also shown are the number of field power circuits required for the various models with heaters.

The unit rating plate lists a "Maximum Time Delay Relay Fuse" or "HACR Type" circuit breaker that is to be used with the equipment. The correct size must be used for proper circuit protection, and also to assure that there will be no nuisance tripping due to the momentary high starting current of the compressor motor.

The disconnect access door on this unit may be locked to prevent unauthorized access to the disconnect.

FIGURE 15
COMPONENT LOCATION

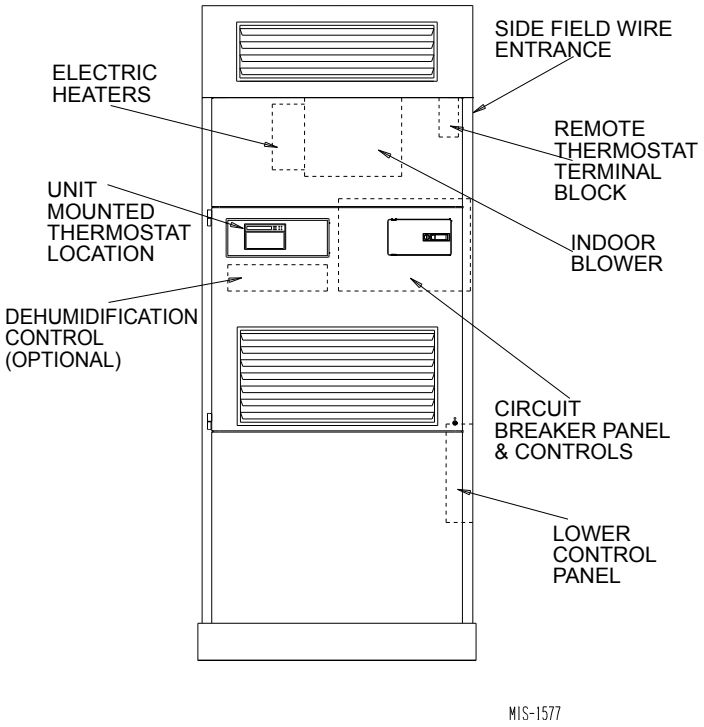

See "Start Up" section for information on three phase scroll compressor start-ups.

The field wiring connections are located behind the top and hinged panel in the circuit breaker panel. See Figure 15.

WIRING – LOW VOLTAGE WIRING

230/208V, 1 PHASE AND 3 PHASE EQUIPMENT DUAL PRIMARY VOLTAGE TRANSFORMERS.

All Equipment leaves the factory wired on 240V tap. For 208V operation, reconnect from 240V to 208V tap. The acceptable operating voltage range for the 240 and 208V taps are as noted in Table 3.

TABLE 3
OPERATING VOLTAGE RANGE

TAP	RANGE
240V	253 – 216
208V	220 – 187

NOTE: The voltage should be measured at the field power connection point in the unit and while the unit is operating at full load (maximum amperage operating condition).

OPTIONAL CLIMATE CONTROLS SEQUENCE OF OPERATION

The standard Climate Control ***Option X*** is a remote thermostat connection terminal block. See Figure 17 for wiring diagram. Compatible thermostats are listed in Table 4.

The Climate Control ***Option E*** is an electronic, programmable thermostat with humidistat. The subbase of the thermostat is factory wired to the front panel of the unit. See Figure 18 for wiring diagram. Compatible for use with Energy Recovery Ventilator. The thermostat can be set in the heat, cool or automatic mode. When the thermostat is set in the heat mode, it can heat only to maintain the temperature set on the thermostat. When the thermostat is set in the cool mode, it can cool only to maintain the temperature set on the thermostat. When the thermostat is set in the automatic mode, the thermostat can change automatically to the heat or cool modes to maintain the temperature set on the thermostat.

The Climate Control ***Option I*** is an electronic, programmable thermostat with humidistat and a CO_2 controller. The subbase of the thermostat and CO_2 controller are factory wired to the front panel of the unit. See Figure 19 for wiring diagram. The thermostat can be set in the heat, cool or automatic mode. When the thermostat is set in the heat mode, it can heat only to maintain the temperature set on the thermostat. When the thermostat is set in the cool mode, it can cool only to maintain the temperature set on the thermostat. When the thermostat is set in the automatic mode, the thermostat can change automatically to the heat or cool modes to maintain the temperature set on the thermostat.

The Climate Control ***Option J*** is an electronic, programmable thermostat with humidity control and is BACnet compatible. The thermostat can be set in the heat, cool or automatic mode. When the thermostat is set in the heat mode, it can heat only to maintain the temperature set on the thermostat. When the thermostat is set in the cool mode, it can cool only to maintain the temperature set on the thermostat. When the thermostat is set in the automatic mode, the thermostat can change automatically to the heat or cool modes to maintain the temperature set on the thermostat. This thermostat supports BACnet IP, MS/TP and Ethernet protocols.

The Climate Control ***Option K*** is an electronic, programmable thermostat with humidity and CO_2 control and is BACnet compatible. The thermostat can be set in the heat, cool or automatic mode. When the thermostat is set in the heat mode, it can heat only to maintain the temperature set on the thermostat. When the thermostat is set in the cool mode, it can cool only to maintain the temperature set on the thermostat. When the thermostat is set in the automatic mode, the thermostat can change automatically to the heat or cool modes to maintain the temperature set on the thermostat.

The CO_2 controller will energize the vent option and the ID blower when the room CO_2 levels rise over set level. Default CO_2 set point is 1000 ppm. See Figure 23.

NOTE: On option X (a field provided means to control ventilation) must be used if any of the motorized ventilation options are installed.

NOTE: Thermostats are shipped in the bottom of the unit and must be mounted to the factory mounted subbase at time of installation.

GENERAL

This unit is equipped with a variable speed ECM motor. The motor is designed to maintain rated airflow up to the maximum static allowed. ***It is important that the blower motor plugs are not plugged in or unplugged while the power is on. Failure to remove power prior to unplugging or plugging in the motor could result in motor failure.***

LOW VOLTAGE CONNECTIONS FOR DDC CONTROL

Fan Only	Energize G
Cooling Mode	Energize Y1, G
1st Stage Heating	Energize G, W1
2nd State Heating (if employed)	Energize G, W2
Ventilation	Energize G, F
Dehumidification	Energize contact between 1 and 2

LOW VOLTAGE CONNECTIONS

These units use a grounded 24 volt AC low voltage circuit.

The *"R"* terminal is the *hot* terminal and the *"C"* terminal is *grounded.*

"G" terminal or pin 6 of P2 is the *fan input*. If the climate control option is abandoned and connections are made directly to P2 pin 6 of P2 must be energized for proper operation.

"Y1" terminal or pin 7 of P2 is the *compressor input*.

"W1" terminal or pin 8 of P2 is the *fist stage heat.*

"R" terminal or pin 10 of P2 is *24 VAC hot*.

"C" terminal or pin 11 of P2 is *24 VAC grounded.*

Terminal *"1"* or pin 4 of P2 is the dehumidification circuit.

Terminal *"2"* or pin 12 of P2 is the dehumidification circuit. A contact must connect terminals 1 and 2.

"W2" terminal or pin 9 of P2 is *second stage heat* (if equipped). If the unit is equipped with an optional hot water coil plenum box or electric heat these will be energized by this terminal.

"F" terminal of pin 5 of P2 is the *ventilation input*. This terminal energizes any factory installed ventilation option.

NOTE: For total and proper control using DDC, a total of 6 controlled outputs are required (5 if no ventilation system is installed).

⚠ CAUTION

Do not plug in or unplug blower motor connectors while the power is on.
Failure to do so may result in motor failure.

TABLE 4
WALL THERMOSTATS

Thermostat	Predominant Features
8403-067	Carbon Dioxide Sensor with LCD for Sensor Readings
8403-060 (1120-445)	3 stage Cool; 3 stage Heat Programmable/Non-Programmable Electronic HP or Conventional, Auto or Manual changeover
8403-081 (VT8650U5500B)	2 stage Cool; 2 stage Heat Programmable/Non-Programmable Electronic HP or Conventional, Auto or Manual changeover with Humidity and Occupancy Sensor, BACnet
CSB9E-THO	3 stage Cool; 3 stage Heat Programmable/Non-Programmable Electronic HP or Conventional Auto or Manual changeover with Humidity Contol BacNet MS/TP or Ethernet Connection
CSB9E-THOC	3 stage Cool; 3 stage Heat Programmable/Non-Programmable Electronic HP or Conventional Auto or Manual changeover with CO_2 & Humidity Contol BacNet MS/TP or Ethernet Connection

FIGURE 16

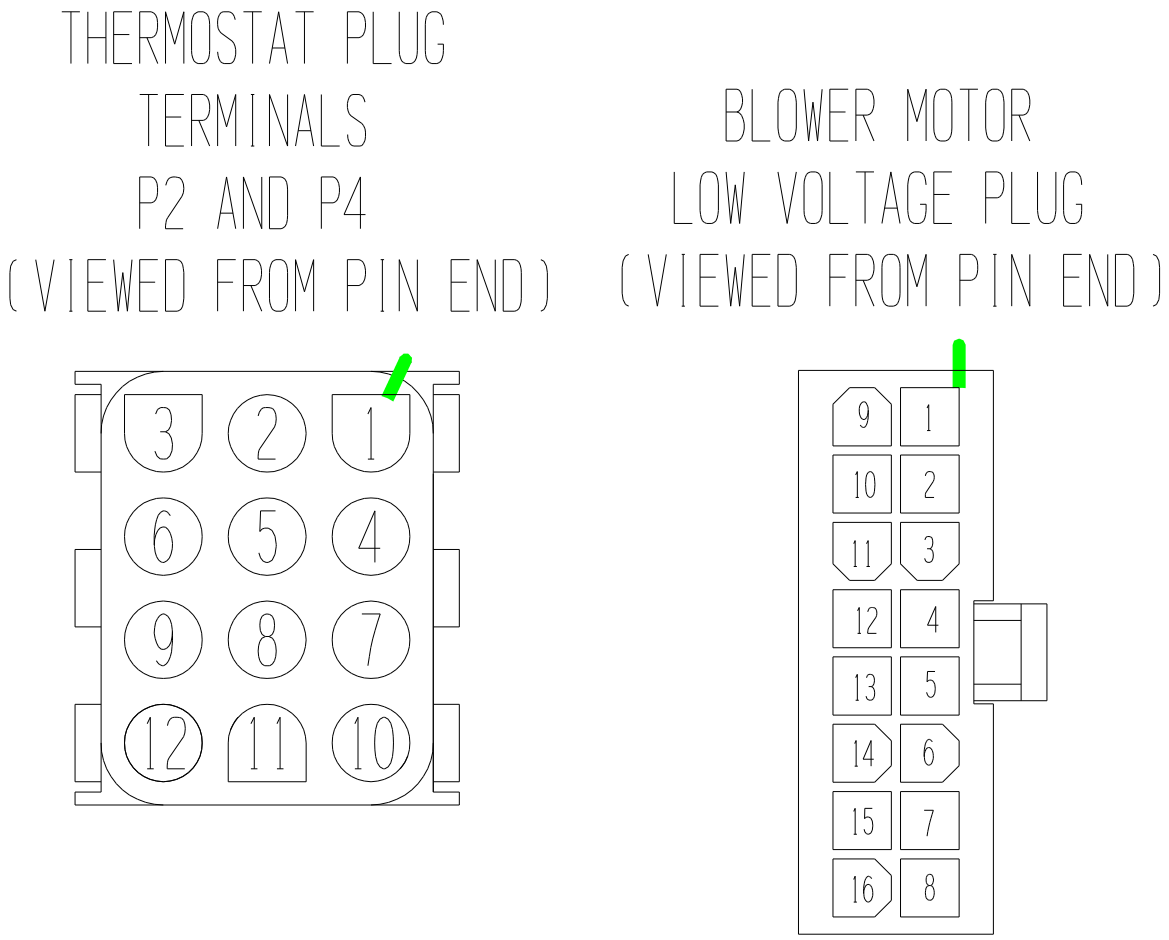

MIS-1285

FIGURE 17
REMOTE THERMOSTAT WIRING DIAGRAM
"X" THERMOSTAT OPTION

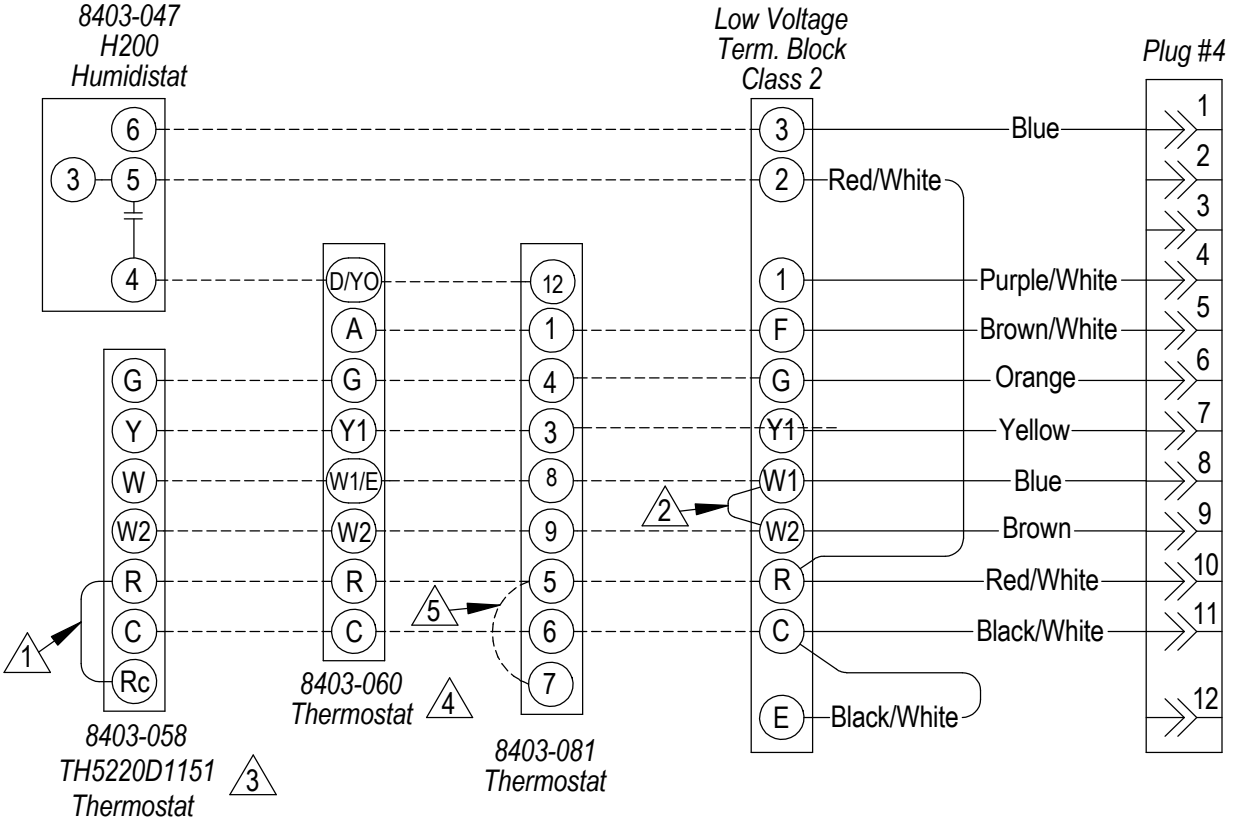

4102-072 B

1 Factory Installed Jumper.

2 Remove for 2 stage electronic heat on 15 KW models.

3 Must be re-configured from default of Heat Pump to Heat/Cool.

4 Must be configured for Heat/Cool and No Economizer for proper operation and for Humidity Control output "D/Yo" to be active.

5 Field Installed Jumper

NOTE: On option X (a field provided means to control ventilation) must be used if any of the motorized ventilation options are installed.

FIGURE 18
UNIT MOUNTED THERMOSTAT WIRING DIAGRAM
"E" THERMOSTAT OPTION

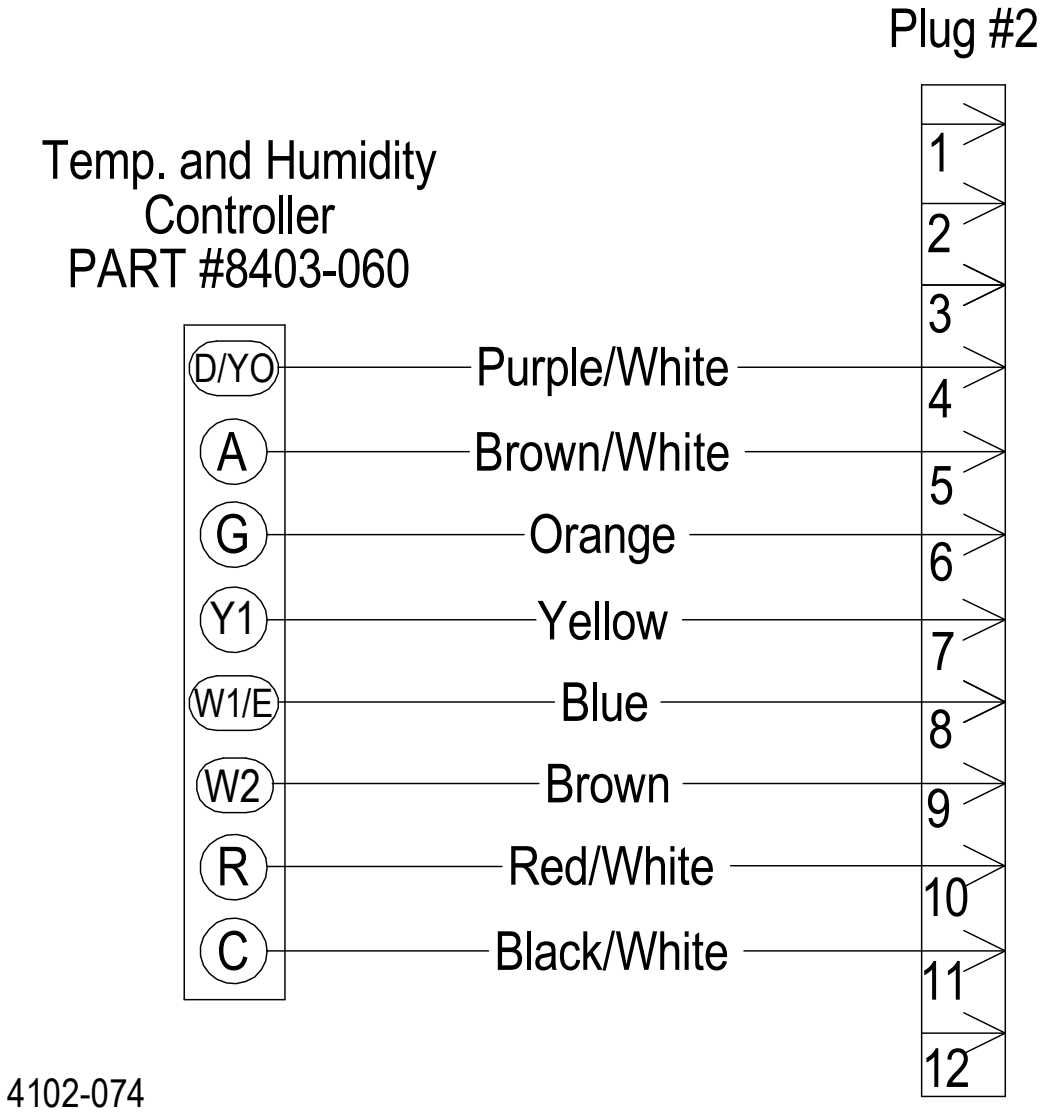

FIGURE 19
UNIT MOUNTED THERMOSTAT WIRING DIAGRAM
"I" THERMOSTAT OPTION

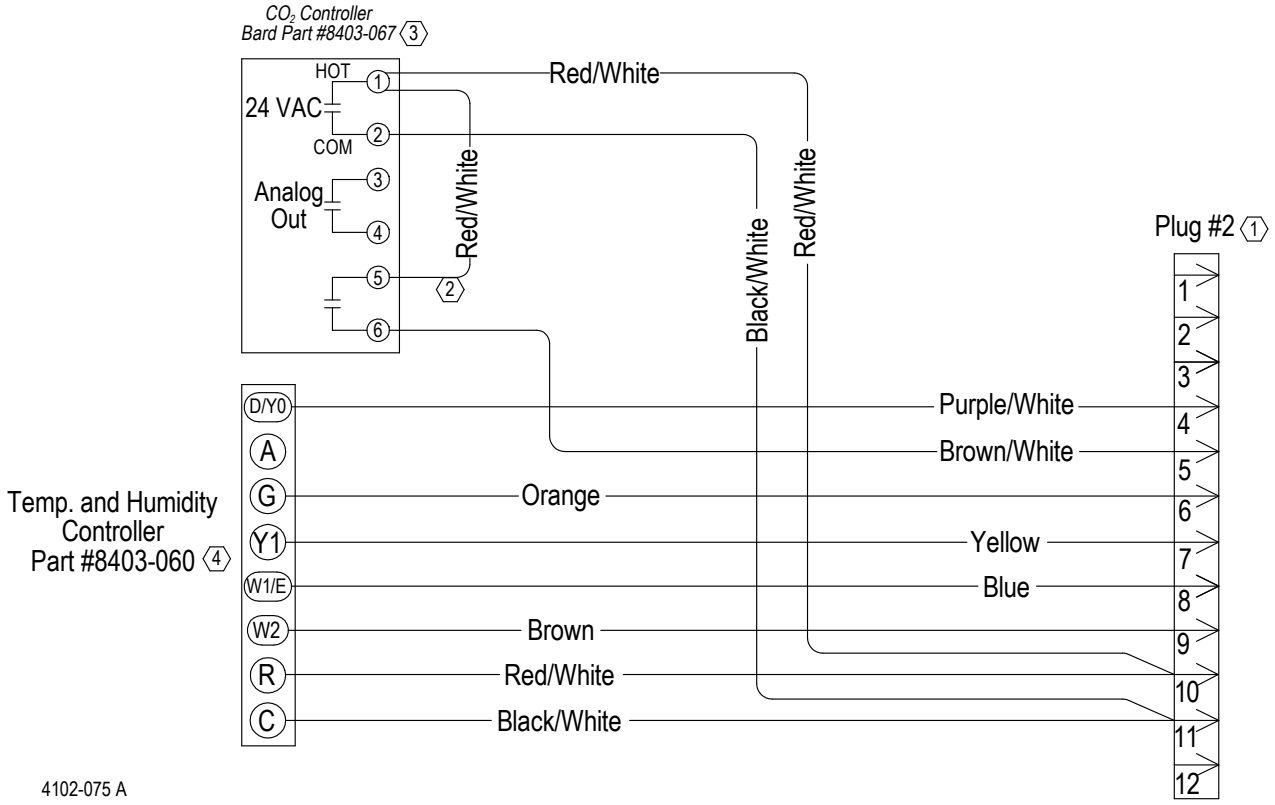

FIGURE 20
UNIT MOUNTED THERMOSTAT WIRING DIAGRAM
“J” OR “K” THERMOSTAT OPTION

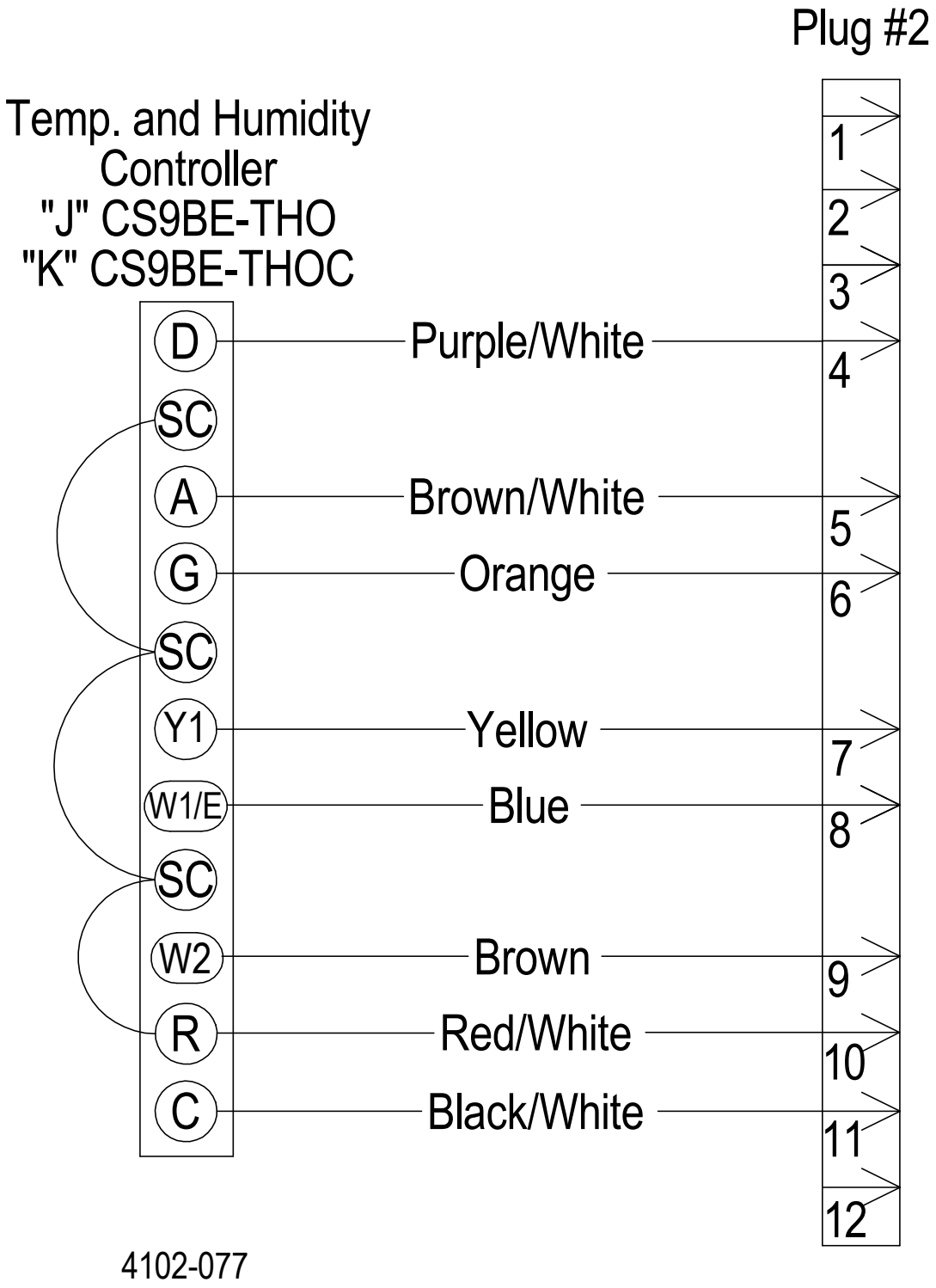

THESE UNITS REQUIRE R-410A REFRIGERANT AND POLYOL ESTER OIL.

GENERAL:

1. Use separate service equipment to avoid cross contamination of oil and refrigerants.
2. Use recovery equipment rated for R-410A refrigerant.
3. Use manifold gauges rated for R-410A (800 psi/250 psi low).
4. R-410A is a binary blend of HFC-32 and HFC-125.
5. R-410A is nearly azeotropic - similar to R-22 and R-12. Although nearly azeotropic, charge with liquid refrigerant.
6. R-410A operates at 40-70% higher pressure than R-22, and systems designed for R-22 cannot withstand this higher pressure.
7. R-410A has an ozone depletion potential of zero, but must be reclaimed due to its global warming potential.
8. R-410A compressors use Polyol Ester oil.
9. Polyol Ester oil is hygroscopic; it will rapidly absorb moisture and strongly hold this moisture in the oil.
10. A liquid line dryer must be used - even a deep vacuum will not separate moisture from the oil.
11. Limit atmospheric exposure to 15 minutes.
12. If compressor removal is necessary, always plug compressor immediately after removal. Purge with small amount of nitrogen when inserting plugs.

TOPPING OFF SYSTEM CHARGE

If a leak has occurred in the system, Bard Manufacturing recommends reclaiming, evacuating (see criteria above), and charging to the nameplate charge. If done correctly, topping off the system charge can be done without problems.

With R-410A, there are no significant changes in the refrigerant composition during multiple leaks and recharges. R-410A refrigerant is close to being an azeotropic blend (it behaves like a pure compound or single component refrigerant). The remaining refrigerant charge, in the system, may be used after leaks have occurred and then "top-off" the charge by utilizing the pressure charts on the inner control panel cover as a guideline.

REMEMBER: When adding R-410A refrigerant, it must come out of the charging cylinder/tank as a liquid to avoid any fractionation, and to insure optimal system performance. Refer to instructions for the cylinder that is being utilized for proper method of liquid extraction.

⚠ WARNING

Failure to conform to these practices could lead to damage, injury or death.

SAFETY PRACTICES:

1. Never mix R-410A with other refrigerants.
2. Use gloves and safety glasses. Polyol Ester oils can be irritating to the skin, and liquid refrigerant will freeze the skin.
3. Never use air and R-410A to leak check; the mixture may become flammable.
4. Do not inhale R-410A – the vapor attacks the nervous system, creating dizziness, loss of coordination and slurred speech. Cardiac irregularities, unconsciousness and ultimate death can result from breathing this concentration.
5. Do not burn R-410A. This decomposition produces hazardous vapors. Evacuate the area if exposed.
6. Use only cylinders rated DOT4BA/4BW 400.
7. Never fill cylinders over 80% of total capacity.
8. Store cylinders in a cool area, out of direct sunlight.
9. Never heat cylinders above 125°F.
10. Never trap liquid R-410A in manifold sets, gauge lines or cylinders. R-410A expands significantly at warmer temperatures. Once a cylinder or line is full of liquid, any further rise in temperature will cause it to burst.

START UP

DESCRIPTION OF STANDARD EQUIPMENT

High Pressure Switch

Provides refrigerant circuit high pressure protection. Includes lockout circuit that is resettable from room thermostat.

Compressor Control Module

Provides short cycle protection for the compressor which extends compressor life, as well as high and low pressure switch monitoring and alarm functions.

Service Lights

One service light indicates when service is required.

- Check System – detects high or low pressure switch operation for compressor protection.

OPTIONAL CFM (Q36A2D, Q42A2D, Q48A2D AND Q60A2D ONLY)

These units are shipped from the factory set to operate at the optional CFM level shown in Table 7. This provides lower operating sound levels for non-ducted, free discharge applications. This CFM level will reduce the system capacity performance by approximately 2% at the same energy efficiency.

Rated CFM is required for ducted applications for maximum performance rating. To obtain full CFM on these models, connect jumper wire as follows:

1. Disconnect all power to the unit. Failure to do so may result in damage to the motor.
2. Open return air service panel
3. Open inner control panel cover
4. Locate low voltage terminal strip. There is a pink jumper wire with both ends attached to terminal marked “G2”. Move one end of this jumper to terminal “Y”.
5. Reverse steps to reassemble.

IMPORTANT INSTALLER NOTE

For improved start-up performance, wash the indoor coil with a dishwasher detergent.

⚠ CAUTION

Do not plug in or unplug blower motor connectors while the power is on.
Failure to do so may result in motor failure.

PHASE MONITOR

All units with three phase scroll compressors are equipped with a 3 phase line monitor to prevent compressor damage due to phase reversal.

The phase monitor in this unit is equipped with two LEDs. If the Y signal is present at the phase monitor and phases are correct the green LED will light and the compressor contactor is allowed to energize.

If phases are reversed, the red fault LED will be lit and compressor operation is inhibited.

If a fault condition occurs, reverse two of the supply leads to the unit. Do not reverse any of the unit factory wires as damage may occur.

THREE PHASE SCROLL COMPRESSOR START UP INFORMATION

Scroll compressors, like several other types of compressors, will only compress in one rotational direction. Direction of rotation is not an issue with single phase compressors since they will always start and run in the proper direction.

However, three phase compressors will rotate in either direction depending upon phasing of the power. Since there is a 50-50 chance of connecting power in such a way as to cause rotation in the reverse direction, ***verification of proper rotation must be made.*** Verification of proper rotation direction is made by observing that suction pressure drops and discharge pressure rises when the compressor is energized. Reverse rotation also results in an elevated sound level over that with correct rotation, as well as, substantially reduced current draw compared to tabulated values.

Verification of proper rotation must be made at the time the equipment is put into service. If improper rotation is corrected at this time there will be no negative impact on the durability of the compressor. However, reverse operation for even one hour may have a negative impact on the bearing due to oil pump out.

All three phase scroll compressors used in the Q-TEC series are wired identically internally. As a result, once the correct phasing is determined for a specific system or installation, connecting properly phased power leads to the same Fusite terminal should maintain proper rotation direction. The direction of rotation of the motor may be changed by reversing any two line connections to the unit.

COMPRESSOR CONTROL MODULE

The compressor control module is standard on all models covered by this manual. The compressor control is an anti-short cycle/lockout timer with high and low pressure switch monitoring and alarm relay output.

Adjustable Delay On Make And Break Timer

On initial power up or any time power is interrupted to the unit, the *delay on make* period begins, which will be 2 minutes plus 10% of the *delay on break* setting. When the delay on make is complete and the high pressure switch (and low pressure switch if employed) is closed, the compressor contactor is energized.

Upon shutdown the delay or break timer starts and prevents restart until the delay on break and delay on make periods have expired.

During routine operation of the unit with no power interruptions the compressor will operate on demand with no delay.

High Pressure Switch and Lockout Sequence

If the high pressure switch opens, the compressor contactor will de-energize immediately. The lockout timer will go into a *soft lockout* and stay in soft lockout until the high pressure switch closes <u>and</u> the delay on break time has expired. If the high pressure switch opens again in this same operating cycle the unit will go into *manual lockout* condition and the alarm relay circuit will energize. Recycling the wall thermostat resets the manual lockout.

Low Pressure Switch, Bypass, and Lockout Sequence

If the low pressure switch opens for more than 120 seconds, the compressor contactor will de-energize and go into a soft lockout. Regardless the state of the low pressure switch, the contactor will reenergize after the delay on make time delay has expired. If the low pressure switch remains open, or opens again for longer than 120 seconds the unit will go into manual lockout condition and the alarm relay circuit will energize. Recycling the wall thermostat resets the manual lockout.

Alarm Relay Output

Alarm terminal is output connection for applications where alarm relay is employed. This terminal is powered whenever compressor is locked out due to HPC or LPC sequences as described.

NOTE: Both high and low pressure switch controls are inherently automatic reset devices. The high pressure switch and low pressure switch cut out and cut in settings are fixed by specific air conditioner or heat pump unit model. The lockout features, both soft and manual, are a function of the Compressor Control Module.

ADJUSTMENTS

Adjustable Delay on Make and Delay on Break Timer

The potentiometer is used to select Delay on Break time from 30 seconds to 5 minutes. Delay on Make (DOM) timing on power-up and after power interruptions is equal to 2 minutes plus 10% of Delay on Break (DOB) setting:

0.5 minute	(30 seconds)	DOB = 123 second DOM
1.0 minute	(60 seconds)	DOB = 126 second DOM
2.0 minute	(120 seconds)	DOB = 132 second DOM
3.0 minute	(180 seconds)	DOB = 138 second DOM
4.0 minute	(240 seconds)	DOB = 144 second DOM
5.0 minute	(300 seconds)	DOB = 150 second DOM

During routine operation of the unit with no power interruptions the compressor will operate on demand with no delay.

Typical Settings for Dual Unit Installation:

Unit 1: DOB set at 2 minutes, and DOM is 132 seconds

Unit 2: DOB set at 4 minutes, and DOM is 144 seconds

SERVICE HINTS

1. Caution user to maintain clean air filters at all times. Also, not to needlessly close off supply air registers. This may reduce airflow through the system, which shortens equipment service life as well as increasing operating costs and noise levels.
2. Check all power fuses or circuit breakers to be sure they are the correct rating.
3. Periodic cleaning of the outdoor coil to permit full and unrestricted airflow circulation is essential.

6. Some service requires the need to remove the unit from the wall including replacement of the indoor coil and/or the outdoor coil. Also servicing the outdoor fan motor or fan blade will require removing the unit from the wall if the unit is installed at a height that is not easily accessible from the outside of the building.

   In order to remove the unit from the wall the following procedure must be used:

   a. Turn off power to the unit at the remote location. Some units may have more than one power supply.

   b. Disconnect field wiring at unit terminal block and remove from unit.

   c. Disconnect condensate drain.

   d. Remove the lower skirting around the unit.

   e. Remove wall mounting brackets from wall on each side of the unit.

   f. If unit is attached to duct work, remove upper cabinet extension by removing the top center screw only from the cabinet side panel.

   g. Remove screws that attach the duct work to the unit flanges.

      This unit is equipped with four rollers mounted to the base. For ease of pulling unit out from the wall, you may want to remove the bottom service door which requires removal of the return air panel, and grip the front flange of the base pan then pull straight out.

7. Annual maintenance is required to make sure that all of the systems are functioning properly.

   a. Check to make sure that the drains are not obstructed in any way.

   b. Remove any debris in the condenser section of the unit.

   c. Inspect and clean mist eliminator as described below.

   d. Inspect and wash outdoor coil as necessary.

MIST ELIMINATOR SERVICE

A mist eliminator is supplied with the wall sleeve. The mist eliminator is constructed of an aluminum frame and mesh. The mist eliminator is located in the top section of the wall sleeve and can be removed from the inside of the building without removing the unit from the wall. This requires that the ventilation package must be removed.

It is recommended that the mist eliminator be inspected annually and serviced as required. The mist eliminator can be inspected from the outside of the building by looking through the outdoor grille.

The mist eliminator can be serviced from the outside by using a vacuum cleaner. The outdoor grille must be removed. Use the vacuum to remove dirt and debris from the surface of the mist eliminator. If additional cleaning is required, the mist eliminator will have to be removed from the sleeve.

The ventilation package will have to be removed to gain access tot he mist eliminator. If the blank off plate option is used, it is not necessary to service the mist eliminator. The steps necessary to remove each of the vent options are listed on the following pages.

The mist eliminator can be cleaned by washing with soap and water. The excess water should be shaken off the mist eliminator before it is reinstalled.

VENT OPTIONS

BAROMETRIC FRESH AIR DAMPER (Standard)

Before starting, make sure the power has been turned off. The return air grille panel must be removed. The fresh air damper assembly can be seen on the back of the unit. See Figure 21.

1. The fresh air damper is attached to the back of the unit with one screw on either side of the assembly. Both of the screws must be removed.
2. Once the mounting screws are removed, tilt the assembly down and lift it out.

The mist eliminator can be seen through the opening. The mist eliminator must be raised up and the bottom can be pulled toward the front of the unit.

ECONOMIZER OR COMMERCIAL ROOM VENTILATOR (Option)

Before starting, make sure the power has been turned off. The return air grille panel must be removed. The economizer (EIFM) or commercial room ventilator (CRV) can be seen after the panel has been removed. The CRV or EIFM must be removed to gain access to the mist eliminator.

1. The two mounting screws in the front of the EIFM or CRV must be removed.
2. The power connectors for the CRV (located on the right side of the unit) must be disconnected. Squeeze the tabs on the sides of the connector and pull straight out. Unplug both of the connectors.
3. Slide the EIFM or CRV straight out of the unit. The mist eliminator can be seen through the opening in the back of the unit. The mist eliminator must be raised up and the bottom can be pulled toward the front of the unit and removed.

Q-TEC ENERGY RECOVERY VENTILATOR (Option)

Before starting, make sure that the power has been turned off. The return air grille panel must be removed. The energy recovery ventilator (QERV) can be seen after the panel has been removed. To gain access to the mist eliminator, the QERV must be removed. See Figure 22.

1. The front fill plate of the QERV must be removed. There is one screw on either side of the plate. Remove these screws and remove the plate.
2. On either side of the QERV there are mounting screws that hold the QERV in place. Remove both of these screws.
3. Underneath the heat recovery cassette there is a power connector for the lower blower assembly. To disconnect this plug, the tabs on both sides of the plug must be squeezed to release the plug. While squeezing the tabs, pull the plug out of the socket.
4. The QERV is plugged into the unit in the right side of the unit. Both of these plugs must be disconnected to remove the QERV. Squeeze the tabs on the sides of the connector and pull straight out.
5. Slide the QERV assembly straight out of the unit, being careful not to let the cassette slide out of the QERV.

The mist eliminator can be seen through the opening in the back of the unit. The mist eliminator must be raised up and the bottom can be pulled toward the front of the unit and removed.

FIGURE 21
FRESH AIR DAMPER REMOVAL

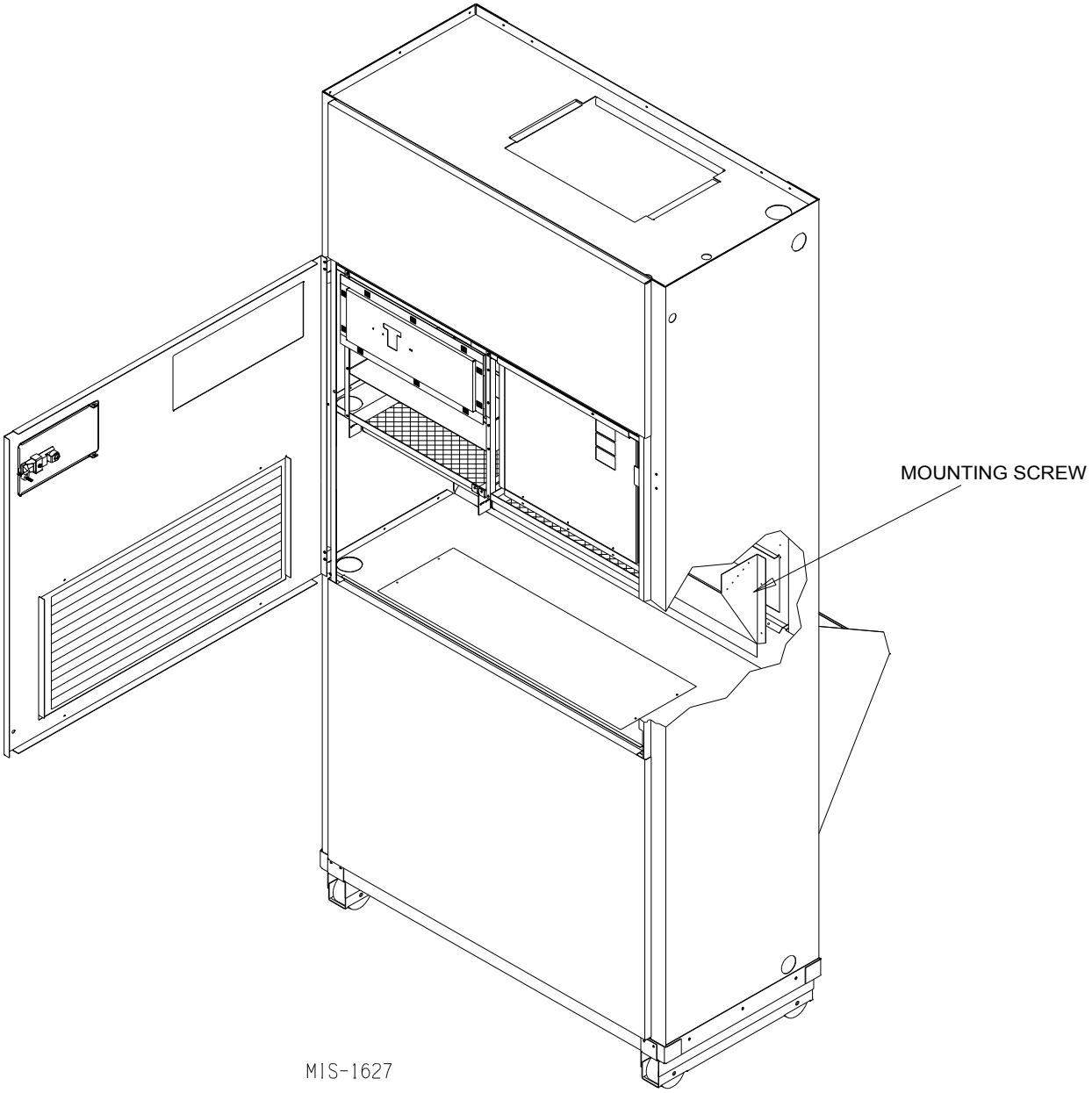

FIGURE 22
QERV REMOVAL

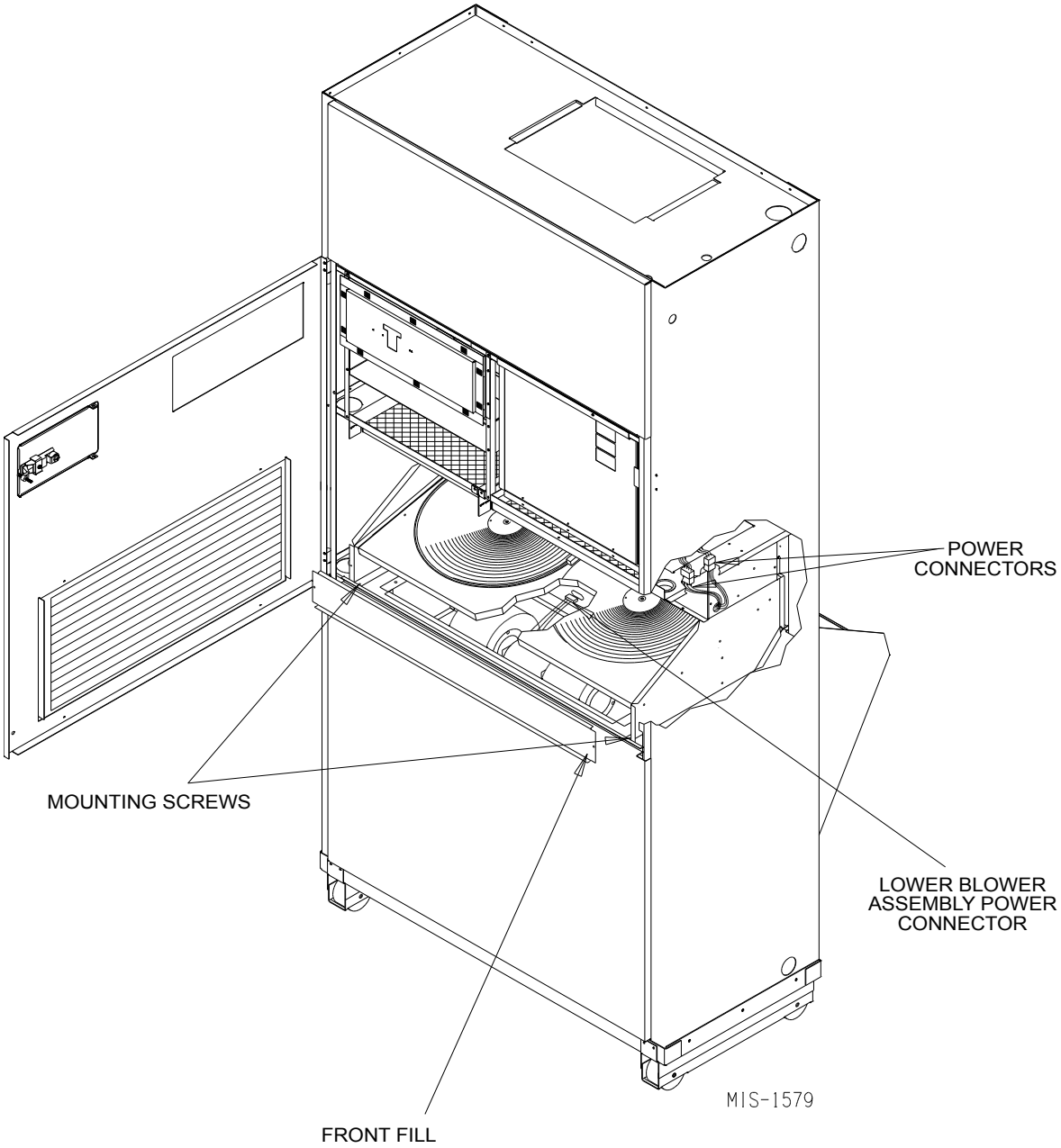

SEQUENCE OF OPERATION

Cooling – Circuit R-Y makes the thermostat pull in the compressor contactor starting the compressor and outdoor motor. The G (indoor motor) circuit is automatically completed on any call for cooling operation, or can be energized by manual fan switch on subbase for constant air circulation.

Heating – Circuit is completed for R-W1 on each heating "on" cycle, energizing the electric heat contactor. R-G also makes starting indoor blower motor.

Second stage heat – Energized circuit R-W2 and the electric heat contactor for the second bank of heaters (if equipped) is energized.

High / Low Pressure control provides protection for the compressor. In the event system pressures go above 600 PSI or below 40 PSI in cooling mode the compressor will be stopped. This will activate the red light located in the control panel. The lockout circuit will hold compressor off line. When the system problem is corrected, the unit operation can be restored by turning of the main power supply off and then back on, or reset the room thermostat. The low pressure control has a bypass to eliminate nuisance lockout on cold start up. Factory set to 2 minutes.

Dehumidification / Reheat Circuit – Both cooling and heating take precedence over dehumidification.

Reheat Circuit – There is a small capillary tube inserted between the reheat coil return line and suction line that will prevent liquid from accumulating in the reheat coil when it is inactive. This drain does not affect the normal operation of the system.

There is a check valve located in the reheat coil return line. It has a soft spring to hold the ball on the seat. This will make the method of checking the ball freedom with a magnet difficult. Refer to Figures 24 and 25 for the location of the check valve and drain back capillary.

When the system is operating in the dehumidification mode the suction pressure will be reduced by 4 to 8 psig and the discharge pressure will be reduced by 19 to 22 psig.

CRV / QERV OPERATION

QERV is energized by applying 24 VAC to the "F" terminal of the low voltage terminal strip on units with "X" climate control option. It is energized by the "A" terminal of the thermostat on units with "E, J or K" climate control option. On climate option "I" it is energized by the brown/white wire at the CO_2 controller.

PRESSURE SERVICE PORTS

High and low pressure service ports are installed on all units so that the system operating pressures can be observed. Pressure curves can be found later in the manual covering all models on both cooling and heating cycles. It is imperative to match the correct pressure curve to the unit by model number. Upper and lower service doors must be attached to obtain proper reading.

FIGURE 23
CO_2 CONTROLLER – FACTORY SET TO 1000 PPM

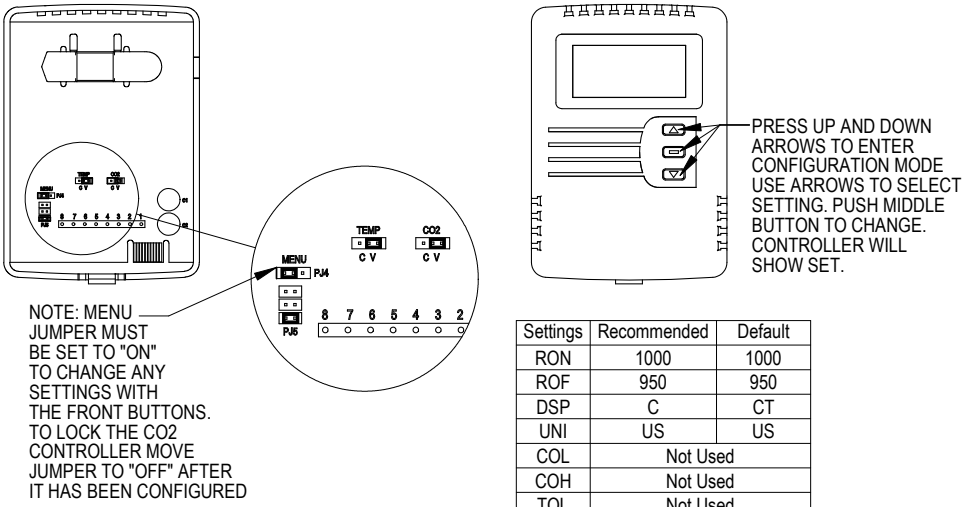

Settings	Recommended	Default
RON	1000	1000
ROF	950	950
DSP	C	CT
UNI	US	US
COL	Not Used	
COH	Not Used	
TOL	Not Used	
TOH	Not Used	
BAR	See Instrution with Controller For High Altitude Installations	
CAL	Used for Field Calibration	

MIS-3326

FIGURE 24
AIR CONDITIONING MODE
CIRCUIT DIAGRAM

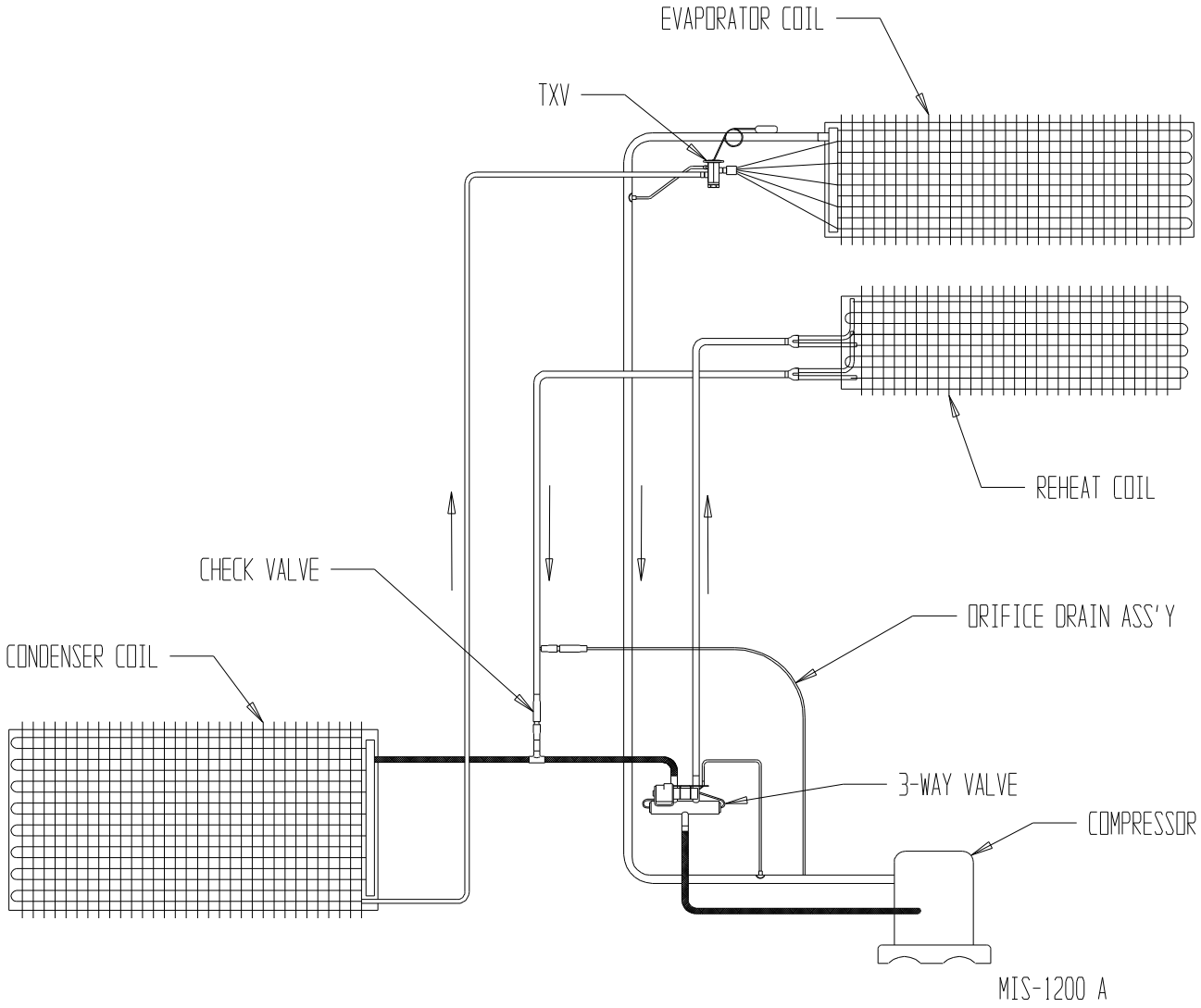

FIGURE 25
DEHUMIDIFICATION MODE
CIRCUIT DIAGRAM

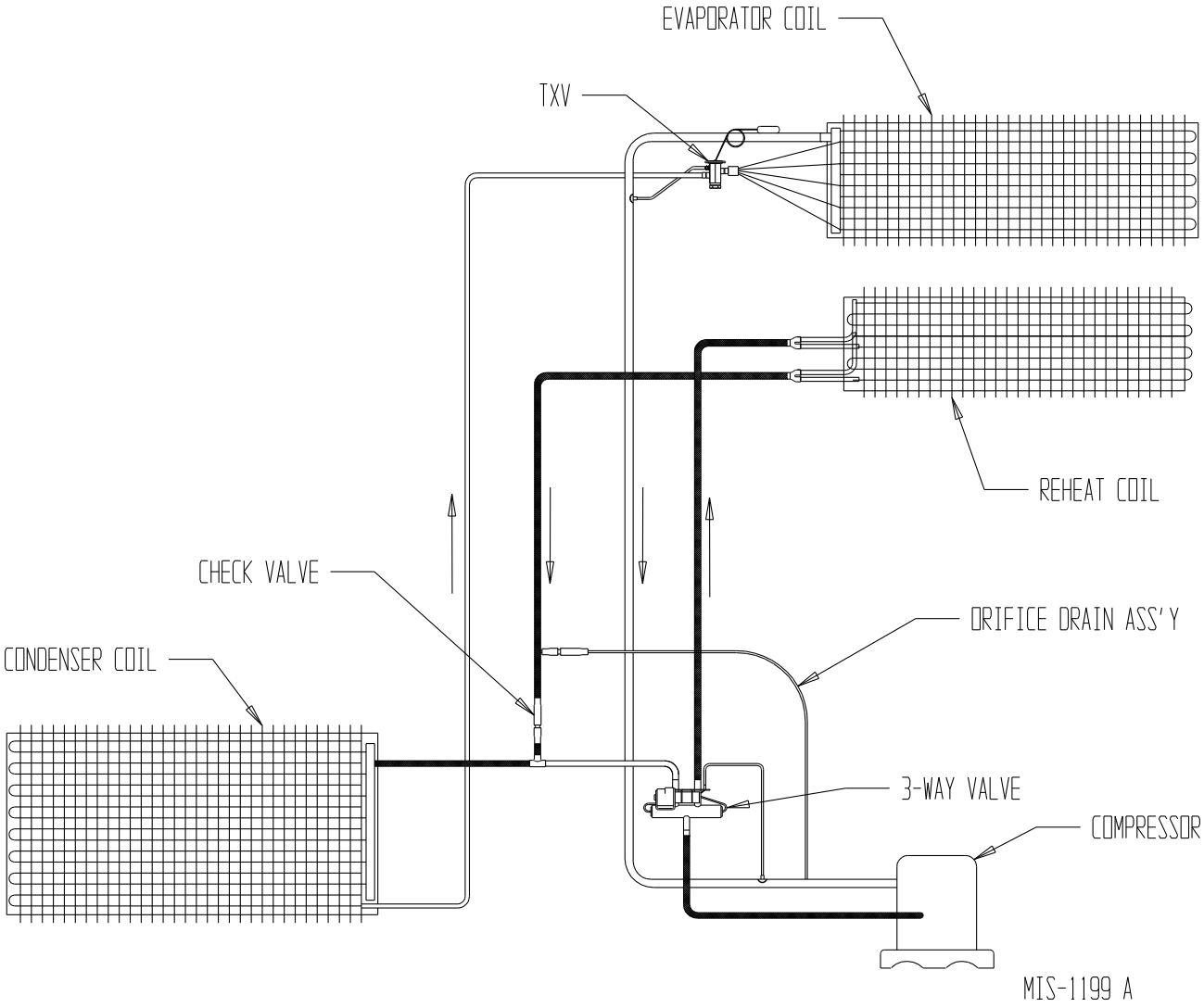

TABLE 5A
TROUBLESHOOTING

Sympton	Possible Cause	What to Check	How to Check or Repair
Compressor contactor does not energize (cooling or heating)	Control circuit wiring	Check for R connection at unit, and 24V between R-C.	Run R connection to outdoor units
	Compressor lock out	1. Check for 24V between L1-C on heat pump control. 2. Check across high pressure switch.	1. If no voltage between L1-C turn thermostat off and on again to reset high pressure switch. 2. If high pressure switch is open and will not reset, replace high pressure switch.
	Compressor short cycle protection	Check for 24V between CC-C and Y-C on heat pump control.	If no voltage between CC-C jumper speed up terminal and within 10 seconds power should appear between CC-C. Remove speed up jumper after 10 seconds.
	Contactor defective	Check for open or shorted coil winding.	Replace contactor.
	Motor defective	Check for open or shorted motor winding.	Replace motor.
Outdoor fan motor does not run (cooling or heating except during defrost)	Motor capacitor defective	Check capacitor rating. Check for open or shorted capacitor.	Replace capacitor.

TABLE 5B
DEHUMIDIFICATION RELAY LOGIC BOARD

		Inputs to Board									Outputs From Board								
		G	Y	B	W2	E1	A1	D	RAT	L	G1	BK	YO	RV	W	E1	A2	TWV	L
Cooling Mode	Unoccupied	X	X								X	X	X						
Cooling Mode	Occupied	X	X				X				X	X	X				X		
Cooling Mode	w/Dehum.	X	X					X			X	X	X						
Heating Mode	Unoccupied	X			X						X	X							
Heating Mode	Occupied	X			X		X				X	X					X		
Heating Mode	w/Dehum.	X			X			X			X	X							
Dehumidification	Unoccupied							X			X		X					X	
Dehumidification	Occupied						X	X			X		X				X	X	

TROUBLESHOOTING ECM™ MOTORS

CAUTION:

Disconnect power from unit before removing or replacing connectors, or servicing motor. To avoid electric shock from the motor's capacitors, disconnect power and wait at least 5 minutes before opening motor.

Symptom	Cause/Procedure
Motor rocks slightly when starting	• This is normal start-up for ECM
Motor won't start • No movement	• Check blower turns by hand • Check power at motor • Check low voltage (24 Vac R to C) at motor • Check low voltage connections (G, Y, W, R, C) at motor • Check for unseated pins in connectors on motor harness • Test with a temporary jumper between R - G • Check motor for tight shaft • Perform motor/control replacement check • **Perform Moisture Check**
• Motor rocks, but won't start	• Check for loose or compliant motor mount • Make sure blower wheel is tight on shaft • Perform motor/control replacement check
Motor oscillates up & down while being tested off of blower	• It is normal for motor to oscillate with no load on shaft
Motor starts, but runs erratically	
• Varies up and down or intermittent	• Check line voltage for variation or "sag" • Check low voltage connections (G, Y, W, R, C) at motor, unseated pins in motor harness connectors • Check "Bk" for erratic CFM command (in variable-speed applications) • Check out system controls, Thermostat • **Perform Moisture Check**
• "Hunts" or "puffs" at high CFM (speed)	• Does removing panel or filter reduce "puffing"? - Reduce restriction - Reduce max airflow
• Stays at low CFM despite system call for cool or heat CFM	• Check low voltage (Thermostat) wires and connections • Verify fan is not in delay mode; wait until delay complete • "R" missing/not connected at motor • Perform motor/control replacement check
• Stays at high CFM	• "R" missing/not connected at motor • Is fan in delay mode? - wait until delay time complete • Perform motor/control replacement check
• Blower won't shut off	• Current leakage from controls into G, Y or W? Check for Triac switched thermostat or solid-state relay
Excessive noise	• Determine if it's air noise, cabinet, duct or motor noise; interview customer, if necessary
• Air noise	• High static creating high blower speed? - Is airflow set properly? - Does removing filter cause blower to slow down? Check filter - Use low-pressure drop filter - Check/correct duct restrictions
• Noisy blower or cabinet	• Check for loose blower housing, panels, etc. • High static creating high blower speed? - Check for air whistling through seams in ducts, cabinets or panels - Check for cabinet/duct deformation
• "Hunts" or "puffs" at high CFM (speed)	• Does removing panel or filter reduce "puffing"? - Reduce restriction - Reduce max. airflow
Evidence of Moisture	
• Motor failure or malfunction has occurred and moisture is present	• Replace motor and **Perform Moisture Check**
• Evidence of moisture present inside air mover	• **Perform Moisture Check**

Do	Don't
• Check out motor, controls, wiring and connections thoroughly before replacing motor	• Automatically assume the motor is bad.
• Orient connectors down so water can't get in - Install "drip loops"	• Locate connectors above 7 and 4 o'clock positions
• Use authorized motor and model #'s for replacement	• Replace one motor or control model # with another (unless an authorized replacement)
• Keep static pressure to a minimum: - Recommend high efficiency, low static filters - Recommend keeping filters clean. - Design ductwork for min. static, max. comfort - Look for and recommend ductwork improvement, where necessary	• Use high pressure drop filters some have ½" H20 drop! • Use restricted returns
• Size the equipment wisely	• Oversize system, then compensate with low airflow
• Check orientation before inserting motor connectors	• Plug in power connector backwards • Force plugs

Moisture Check

- Connectors are oriented "down" (or as recommended by equipment manufacturer)
- Arrange harness with "drip loop" under motor
- Is condensate drain plugged?
- Check for low airflow (too much latent capacity)
- Check for undercharged condition
- Check and plug leaks in return ducts, cabinet

Comfort Check

- Check proper airflow settings
- Low static pressure for lowest noise
- Set low continuous-fan CFM
- Use humidistat and 2-speed cooling units
- Use zoning controls designed for ECM that regulate CFM
- Thermostat in bad location?

Replacing ECM Control Module

To replace the control module for the GE variable-speed indoor blower motor you need to take the following steps:

1. You MUST have the correct replacement module. The controls are factory programmed for specific operating modes. Even though they look alike, different modules may have completely different functionality.

USING THE WRONG CONTROL MODULE VOIDS ALL PRODUCT WARRANTIES AND MAY PRODUCE UNEXPECTED RESULTS.

2. Begin by removing AC power from the furnace or air handler being serviced. **DO NOT WORK ON THE MOTOR WITH AC POWER APPLIED.** To avoid electric shock from the motor's capacitors, disconnect power and wait at least 5 minutes before opening motor.

3. It is usually not necessary to remove the motor from the blower assembly. However, it is recommended that the whole blower assembly, with the motor, be removed from the furnace/air handler. (Follow the manufacturer's procedures). Unplug the two cable connectors to the motor. There are latches on each connector. **DO NOT PULL ON THE WIRES.** The plugs remove easily when properly released.

4. Locate the two standard ¼" hex head bolts at the rear of the control housing (at the back end of the control opposite the shaft end). *Refer to Figure 26.* Remove these two bolts from the motor and control assembly while holding the motor in a way that will prevent the motor or control from falling when the bolts are removed. If an ECM2.0 control is being replaced (recognized by an aluminum casting rather that a deep-drawn black steel can housing the electronics), remove only the hex-head bolts. **DO NOT REMOVE THE TORX-HEAD SCREWS.**

5. The control module is now free of mechanical attachment to the motor endshield but is still connected by a plug and three wires inside the control. Carefully rotate the control to gain access to the plug at the control end of the wires. With thumb and forefinger, reach the latch holding the plug to the control and release it by squeezing the latch tab and the opposite side of the connector plug and gently pulling the plug out of the connector socket in the control. **DO NOT PULL ON THE WIRES. GRIP THE PLUG ONLY.**

6. The control module is now completely detached from the motor. Verify with a standard ohmmeter that the resistance from each motor lead (in the motor plug just removed) to the motor shell is >100K ohms. *Refer to Figure 27.* (Measure to unpainted motor end plate.) If any motor lead fails this test, do not proceed to install the control module. **THE MOTOR IS DEFECTIVE AND MUST BE REPLACED.** Installing the new control module will cause it to fail also.

7. Verify that the replacement control is correct for your application. Refer to the manufacturer's authorized replacement list. **USING THE WRONG CONTROL WILL RESULT IN IMPROPER OR NO BLOWER OPERATION.** Orient the control module so that the 3-wire motor plug can be inserted into the socket in the control. Carefully insert the plug and press it into the socket until it latches. **A SLIGHT CLICK WILL BE HEARD WHEN PROPERLY INSERTED.** Finish installing the replacement control per one of the three following paragraphs, 8a, 8b or 8c.

8a. **IF REPLACING AN ECM 2.0 CONTROL** (control in cast aluminum can with air vents on the back of the can) **WITH AN ECM 2.3 CONTROL** (control containing black potting for water protection in black deep-drawn steel case with no vents in the bottom of the can), locate the two through-bolts and plastic tab that are packed with the replacement control. Insert the plastic tab into the slot at the perimeter of the open end of the can so that the pin is located on the inside of the perimeter of the can. Rotate the can so that the tab inserts into the tab locater hole in the endshield of the motor. Using the two through-bolts provided with the replacement control, reattach the can to the motor.

THE TWO THROUGH-BOLTS PROVIDED WITH THE REPLACEMENT ECM 2.3 CONTROL ARE SHORTER THAN THE BOLTS ORIGINALLY REMOVED FROM THE ECM 2.0 CONTROL AND MUST BE USED IF SECURE ATTACHMENT OF THE CONTROL TO THE MOTOR IS TO BE ACHIEVED.
DO NOT OVERTIGHTEN THE BOLTS.

8b. **IF REPLACING AN ECM 2.3 CONTROL WITH AN ECM 2.3 CONTROL**, the plastic tab and shorter through-bolts are not needed. The control can be oriented in two positions 180° apart. **MAKE SURE THE ORIENTATION YOU SELECT FOR REPLACING THE CONTROL ASSURES THE CONTROL'S CABLE CONNECTORS WILL BE LOCATED DOWNWARD IN THE APPLICATION SO THAT WATER CANNOT RUN DOWN THE CABLES AND INTO THE CONTROL.** Simply orient the new control to the motor's endshield, insert bolts, and tighten. ***DO NOT OVERTIGHTEN THE BOLTS.***

8c. **IF REPLACING AN ECM 2.0 CONTROL WITH AN ECM 2.0 CONTROL** *(It is recommended that ECM 2.3 controls be used for all replacements),* the new control must be attached to the motor using through bolts identical to those removed with the original control. ***DO NOT OVERTIGHTEN THE BOLTS.***

9. Reinstall the blower/motor assembly into the HVAC equipment. Follow the manufacturer's suggested procedures.

10. Plug the 16-pin control plug into the motor. The plug is keyed. Make sure the connector is properly seated and latched.

11. Plug the 5-pin power connector into the motor. Even though the plug is keyed, **OBSERVE THE PROPER ORIENTATION. DO NOT FORCE THE CONNECTOR.** It plugs in very easily when properly oriented. **REVERSING THIS PLUG WILL CAUSE IMMEDIATE FAILURE OF THE CONTROL MODULE.**

12. Final installation check. Make sure the motor is installed as follows:
    a. Unit is as far INTO the blower housing as possible.
    b. Belly bands are not on the control module or covering vent holes.
    c. Motor connectors should be oriented between the 4 o'clock and 8 o'clock positions when the blower is positioned in its final location and orientation.
    d. Add a drip loop to the cables so that water cannot enter the motor by draining down the cables. *Refer to Figure 28.*

The installation is now complete. Reapply the AC power to the HVAC equipment and verify that the new motor control module is working properly. Follow the manufacturer's procedures for disposition of the old control module.

Figure 26
Control Disassembly

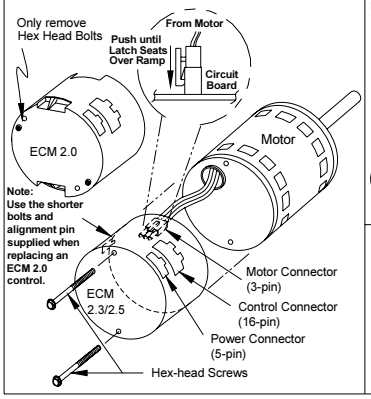

Figure 27
Winding Test

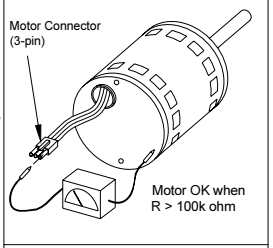

Figure 28
Drip Loop

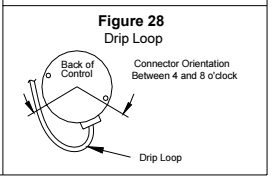

FAN BLADE SETTING DIMENSIONS

Any service work requiring removal or adjustment in the fan and/or motor area will require that the dimensions in Table 6 be checked and blade adjusted in or out of the motor shaft accordingly.

FIGURE 29
FAN BLADE SETTING

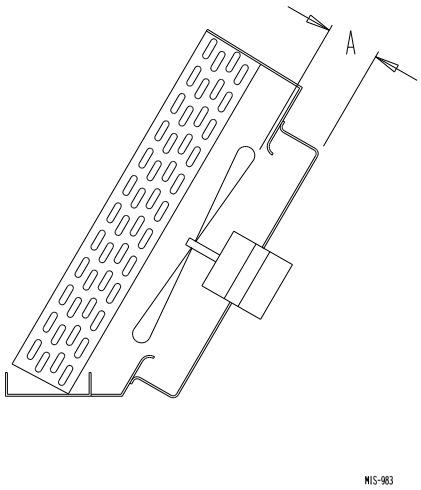

TABLE 6
FAN BLADE DIMENSIONS

MODEL	DIMENSION A (INCHES)
All Q**A2D Models	.750

R-410A

REFRIGERANT CHARGE

This unit was charged at the factory with the quantity of refrigerant listed on the serial plate. AHRI capacity and efficiency ratings were determined by testing with this refrigerant charge quantity.

The following pressure tables show nominal pressures for the units. Since many installation specific situations can affect the pressure readings, this information should only be used by certified technicians as a guide for evaluating proper system performance. They shall not be used to adjust charge. If charge is in doubt, reclaim, evacuate and recharge the unit to the serial plate charge.

TABLE 7
SUBCOOLING AT LIQUID LINE

MODEL	RATED CFM	95°F OD TEMPERATURE	82°F OD TEMPERATURE
Q24A2D	800	34 - 36	34 - 32
Q30A2D	1000	27 - 29	27 - 25
Q36A2D	1200	31 - 33	31 - 29
Q42A2D	1200	31 - 33	31 - 29
Q48A2D	1400	25 - 27	25 - 23
Q60A2D	1550	21 - 23	21 - 19

TABLE 8
INDOOR BLOWER PERFORMANCE

Model	Rated ESP	① Max. ESP	② Rated CFM	③ Optional CFM	④ Continuous CFM	CFM @ Max. ESP	Dehum. CFM
Q24A2D ⑤	.10	0.5	800	N/A	800	700	800
Q30A2D	.15	0.8	1000	N/A	1000	910	1000
Q36A2D	.15	0.8	1200	1000	1000	1175	1000
Q42A2D	.15	0.8	1200	1000	1000	1175	1000
Q48A2D	.15	0.8	1400	1100	1100	1175	1250
Q60A2D	.20	0.5	1550	1250	1100	1400	1250

NOTE: These units are equipped with a variable speed (ECM) indoor motor that automatically adjust itself to maintain approximately the same rate of indoor airflow in both heating and cooling, dry and wet coil conditions and at both 230/208 or 460 volts.

① Maximum ESP (inches WC) shown is with 1" thick disposable filter (reduced by .2 for 2" filter).

② Rated CFM for ducted applications – required for maximum performance rating. To obtain full CFM on models Q36A2D, Q42A2D, Q48A2D & Q60A2D connect the pink jumper wire (provided) to terminal #G2 and #Y on the low voltage terminal block located in the circuit breaker box.

③ Optional CFM – the unit is shipped from the factory set to operate at the optional CFM level shown. This provides lower operating sound levels for non-ducted, free discharge applications. This reduces system capacity performance by approximately 2% at the same energy efficiency.

④ Continuous fan CFM is the total air being circulated during continuous fan mode.

⑤ Model Q24A2D – when operating on 2nd stage heating the indoor air will increase to 1000 CFM.

TABLE 9
COOLING PRESSURE
(ALL TEMPERATURES IN DEGREES F)

MODEL	RETURN AIR TEMP.	COOLING CAPACITY	75°	80°	85°	90°	95°	100°	105°	110°	115°
Q24A2D	75 DB 62 WB	Total Cooling	25,700	24,600	23,600	22,700	21,800	21,100	20,300	19,600	19,100
		Sensible Cooling	18,800	18,600	18,300	17,900	17,700	17,300	17,000	16,600	16,200
	80 DB 67 WB	Total Cooling	27,400	26,800	26,200	25,600	25,000	24,500	23,900	23,400	22,900
		Sensible Cooling	18,200	18,200	18,100	17,900	17,800	17,600	17,400	17,100	16,800
	85 DB 72 WB	Total Cooling	32,700	31,400	30,100	28,900	27,800	26,800	25,800	24,900	24,100
		Sensible Cooling	18,700	18,500	18,200	17,800	17,500	17,100	16,600	16,100	15,500
Q30A2D	75 DB 62 WB	Total Cooling	30,600	29,300	28,200	27,100	26,000	25,000	24,000	23,100	22,100
		Sensible Cooling	23,200	22,700	22,200	21,700	21,200	20,800	20,300	19,900	19,400
	80 DB 67 WB	Total Cooling	32,600	31,900	31,300	30,600	29,800	29,100	28,300	27,500	26,600
		Sensible Cooling	22,500	22,200	22,000	21,700	21,400	21,100	20,800	20,500	20,200
	85 DB 72 WB	Total Cooling	38,900	37,300	36,000	34,600	33,100	31,900	30,500	29,300	28,000
		Sensible Cooling	23,100	22,600	22,100	21,600	21,000	20,400	19,900	19,200	18,600
Q36A2D	75 DB 62 WB	Total Cooling	34,900	33,700	32,500	31,300	30,200	29,000	27,800	26,700	25,500
		Sensible Cooling	26,800	26,300	25,900	25,400	24,900	24,400	23,800	23,200	22,700
	80 DB 67 WB	Total Cooling	37,200	36,700	36,100	35,400	34,600	33,800	32,800	31,800	30,700
		Sensible Cooling	26,000	25,800	25,600	25,400	25,100	24,800	24,400	24,000	23,600
	85 DB 72 WB	Total Cooling	44,300	42,900	41,500	40,000	38,500	37,000	35,400	33,900	32,300
		Sensible Cooling	26,700	26,200	25,700	25,300	24,600	24,000	23,300	22,500	21,800
Q42A2D	75 DB 62 WB	Total Cooling	40,400	39,000	37,600	36,200	34,800	33,600	32,300	31,000	29,800
		Sensible Cooling	29,500	29,000	28,500	27,800	27,300	26,600	26,000	25,400	24,700
	80 DB 67 WB	Total Cooling	43,100	42,500	41,700	40,900	40,000	39,100	38,100	37,000	35,800
		Sensible Cooling	28,600	28,400	28,200	27,800	27,500	27,100	26,700	26,200	25,700
	85 DB 72 WB	Total Cooling	51,400	49,700	47,900	46,200	44,500	42,800	41,100	39,400	37,600
		Sensible Cooling	29,300	28,800	28,400	27,600	27,000	26,200	25,500	24,600	23,700
Q48A2D	75 DB 62 WB	Total Cooling	46,900	45,100	43,300	41,700	40,100	38,600	37,200	35,900	34,700
		Sensible Cooling	34,400	33,500	32,700	31,900	31,200	30,600	29,800	29,200	28,700
	80 DB 67 WB	Total Cooling	50,100	49,100	48,100	47,100	46,000	45,000	43,900	42,800	41,700
		Sensible Cooling	33,300	32,800	32,400	31,900	31,500	31,100	30,600	30,200	29,800
	85 DB 72 WB	Total Cooling	59,700	57,400	55,300	53,200	51,100	49,200	47,300	45,500	43,800
		Sensible Cooling	34,100	33,300	32,600	31,700	30,900	30,100	29,200	28,300	27,500
Q60A2D	75 DB 62 WB	Total Cooling	53,400	52,200	50,800	49,100	47,000	44,800	42,200	39,400	36,400
		Sensible Cooling	38,500	38,300	37,800	37,000	36,000	34,600	33,100	31,200	29,000
	80 DB 67 WB	Total Cooling	57,000	56,900	56,400	55,500	54,000	52,200	49,800	47,000	43,800
		Sensible Cooling	37,300	37,500	37,400	37,000	36,300	35,200	33,900	32,200	30,200
	85 DB 72 WB	Total Cooling	67,900	66,500	64,800	62,700	60,000	57,100	53,700	50,000	46,000
		Sensible Cooling	38,200	38,100	37,600	36,800	35,600	34,100	32,300	30,200	27,800

① Below 65°F, unit requires a factory or field installed low ambient control
② Return Air Temp. °F.