INSTALLATION INSTRUCTIONS

ECONOMIZERS WITH EXHAUST FOR EQUIPMENT BUILDING APPLICATIONS

Models:

EWM5-T*
(Factory Installed Vent Option "Y")
with D.B. OUTDOOR CONTROL
&
EWM5-E*
(Factory Installed Vent Option "Z")
with ENTHALPY OUTDOOR CONTROL

For Use with 3-1/2 Through 6 Ton
Wall Mount Air Conditioners
and Heat Pumps

NOTE: ***These instructions are written to cover field-installed economizers, but are also included with factory-installed economizers. For factory-installed economizers, all portions addressing "installation" are for reference only.***

Bard®
SINCE 1914
Climate Control Solutions

Bard Manufacturing Company, Inc.
Bryan, Ohio 43506
www.bardhvac.com

Manual : 2100-624A
Supersedes: 2100-624
Date: 12-3-14

CONTENTS

GENERAL
Nomenclature....3
General Information....3
Unpacking....3
Description....3

INSTALLATION OF FIELD-INSTALLED ECONOMIZER
Basic Installation....4
Preparing Unit for Economizer Installation....4
Outdoor Air Sensor Installation....4
Economizer Installation....6
Economizer Checkout....8
Control Wiring Connection Diagrams....8

START-UP/CHECKOUT PROCEDURES
JADE™ Economizer Controller....14
Review/Customize System Setup....14
Enthalpy Settings....18
Economizer Sequence of Operation....19
Condition - Cool/Dry OA Conditions....19
Condition - Warm/Humid OA Conditions....19
Economizer Operation for Single Stage....21
Economizer Operation for Two Stage....22

FIGURES
Figure 1 Wall-Mount Unit Access Panels....4
Figure 2 Condenser Exhaust Plate w/Screen....5
Figure 3 Outdoor Air Sensor Installation....5
Figure 4 Control Panel....6
Figure 5 Mixed Air Temp Sensor Installation....7
Figure 6 Vent Option Door Installation....7
Figure 7 1-Stage A/C w/Opt. Elec. Heat....9
Figure 8 2-Stage A/C w/Opt. Elec. Heat....10
Figure 9 1-Stage HP w/Opt. Elec. Heat....11
Figure 10 2-Stage HP w/Opt. Elec. Heat....12
Figure 11 2-Stage HP w/Dehum. & Opt. Elec. Heat..13
Figure 12 JADE™ Economizer Controller....14
Figure 13 100% Outside Airflow Path....19
Figure 14 Mixed Airflow Path....19
Figure 15 100% Closed Loop Airflow Path....20

TABLES
Table 1 Economizer Application....3
Table 2 System Setup Menu Levels....15
Table 3 Advanced Setup Menu Levels....15
Table 4 Setpoints Menu Levels....16
Table 5 Checkout Menu Levels....16
Table 6 Status Menu Levels....17
Table 7 Alarm Examples....18

ECONOMIZER FEATURES

- One piece construction—easy to install. Direct-drive actuator eliminates linkage.
- Exhaust air damper—built in with positive closed position. Provides exhaust air capability to prevent pressurization of tight buildings.
- **JADE™** controller provides nearly limitless customization on a solid, intuitive electronic platform.
- Actuator Motor – 24 volt, power-open, spring-return, direct-coupled with stall protection. Self-centering shaft clamp and access cover facilitate ease of replacement/maintenance.
- Proportioning-type control for maximum “free” cooling economy and comfort with up to 100% outside air.
- Dry bulb sensor to monitor outdoor air temperature.
- Minimum Ventilation Position available for required ventilation of occupants or dilution of pollutants.
- Mixed air sensor to monitor outdoor and return air to automatically modulate damper position.

ECONIMIZER WITH EXHAUST MODEL NOMENCLATURE

E — ECONOMIZER

WM — WALL MOUNT A/C or HP

5 — CABINET SIZE
5 - 5 Ton
(See Table 1)

–

T — T = Temperature
E = Enthalpy

X — COLOR OPTIONS
X - Beige
1 - White
4 - Buckeye Gray
5 - Desert Brown
8 - Dark Bronze

GENERAL INFORMATION

The economizer should only be installed by a trained heating and air conditioning technician. These instructions serve as a guide to the technician installing an economizer package, not as a step-by-step procedure with which the mechanically inclined owner can install the package.

The economizer housing is shipped in one carton, which contains the electrical harness, miscellaneous hardware and installation instructions.

The economizer installation requires the use of a 2-stage cooling thermostat (if there is not one already present) and requisite amounts of low voltage conductor wire for two-stage cooling. The number of low-voltage control conductors will vary depending upon application.

If using a master controller, the MC4001 controller is designed specifically to control two (2) redundant wall mount units equipped with economizers.

Any wall mount unit equipped with an economizer must also have a factory/field installed low ambient control. Please refer to appropriate model/year Specification Sheet for requisite field installed low ambient control kit part numbers.

UNPACKING

Upon receipt of the equipment, be sure to compare the model number found on the shipping label with the accessory identification information on the orders and shipping document to verify that the correct accessory has been shipped.

Inspect the carton housing of each economizer assembly as it is received and, before signing the freight bill, verify that all items have been received and there is no visible damage. Note any shortages or damage on all copies of the freight bill. The receiving party must contact the last carrier immediately, preferably in writing, requesting inspection by the carrier's agent. Concealed damage not discovered until after loading must be reported to the carrier within 15 days of its receipt.

DESCRIPTION

The EWM-T, -E economizer is designed to be used with wall mount series air conditioners and heat pumps, shown in Table 1, equipped with low ambient controls. They are electromechanical economizer systems designed to provide "free" cooling where the outdoor air temperature/enthalpy is cool enough to provide the needed cooling without running the compressor, or in addition to the compressor. When cooling is required, the system automatically takes advantage of cold outdoor air when available and uses it for first stage cooling. This then reduces the need to run the air conditioning compressor providing lower operating costs and increasing the service life of the equipment. If the outdoor air temperature/enthalpy is too warm to be sufficient for cooling, the dry bulb outdoor air temperature sensor detects the condition and automatically closes the outdoor air intake/exhaust damper, opens the return air damper and switches to compressor-only operation. Without attention from the end user, the economizer assembly is meant to automatically achieve maximum savings while ensuring appropriately cool space temperatures. The economizer utilizes a fully modulating damper actuator, which will control intake/exhaust in order to obtain and maintain a factory-set minimum supply air temperature. As a secondary feature, the economizer assembly can be programmed for a minimum ventilation based on an "occupied" (or otherwise dedicated) 24V signal to satisfy fresh air ventilation on populated structures or dilution of internal pollutants.

EWM Series economizers are not for use with variable capacity ECU models.

TABLE 1
Economizer Application

① MODEL	FOR USE WITH FOLLOWING UNITS			
EWM5-T✳	W38A	WA3S	S38H	T36H
EWM5-E✳	J/W42A	WA4S	S43H	T42H
	J/W48A	WA5S	S49H	T48H
	W49A	J/W42H	S61H	T60H
	J/W60A	J/W48H	J/W42L	T36S
	W61A	J/W60H	J/W48L	T42S
	J/W72A		J/W60L	T48S
			J/W70L	T60S

① Low ambient control is required w/economizer for low temperature operation.
✳ Color

INSTALLATION OF FIELD-INSTALLED ECONOMIZER

BASIC INSTALLATION

⚠ WARNING

Electrical shock hazard.

Disconnect remote electrical power supply or supplies before servicing.

Failure to do so could result in electric shock or death.

Preparing Unit for Economizer Installation

1. Disconnect power to unit.
2. Unpack the economizer assembly, which includes the integral economizer with attached electrical harness, mixed air sensor, body panels, miscellaneous hardware and installation instructions.
3. From existing wall mount unit, remove and save (or discard) as directed (see Figure 1):
   - Blower access panel (save)
   - Ventilation access panel (discard)
   - Filter access panel (discard) if applicable
   - Filter (save)
   - Outer and inner control panel doors (save)
4. Remove and discard the exhaust cover plate.
5. Install new condenser exhaust plate with screen over opening into condensor section (see Figure 2).

Outdoor Air Sensor Installation

1. Remove and save both side grilles.
2. Install the outdoor air sensor (temperature only or enthalpy) in the lower condenser section on the side opposite the the control panel with two (2) screws provided. Tube end of sensor should mount flush with base (see Figure 3).
3. Route the wire harness across the back of the unit and secure with two wire ties (provided). Push harness up through the grommet in the bottom of the control panel. Secure with wire ties (provided) to the other wires in the grommet. Ensure the wire harness cannot contact moving parts or copper tubing. Replace side grilles.

FIGURE 1
Wall-Mount Unit Access Panels

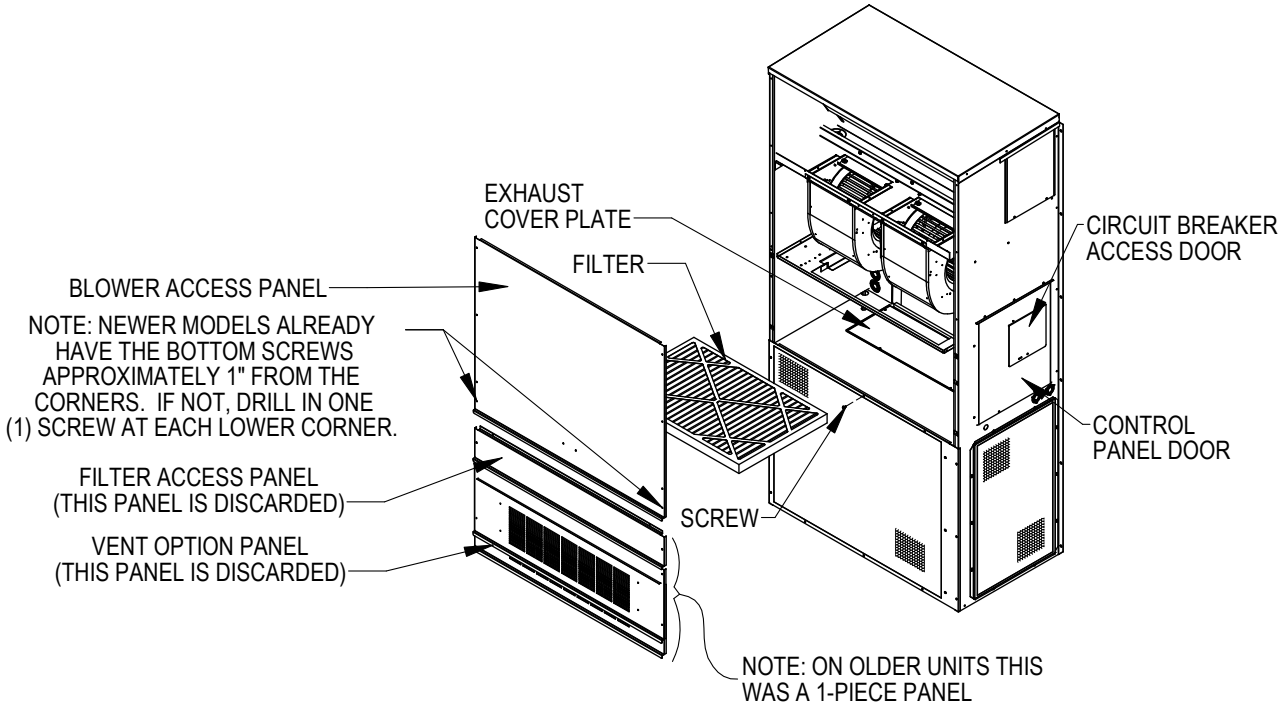

MIS-2964 C

FIGURE 2
Condenser Exhaust Plate with Screen

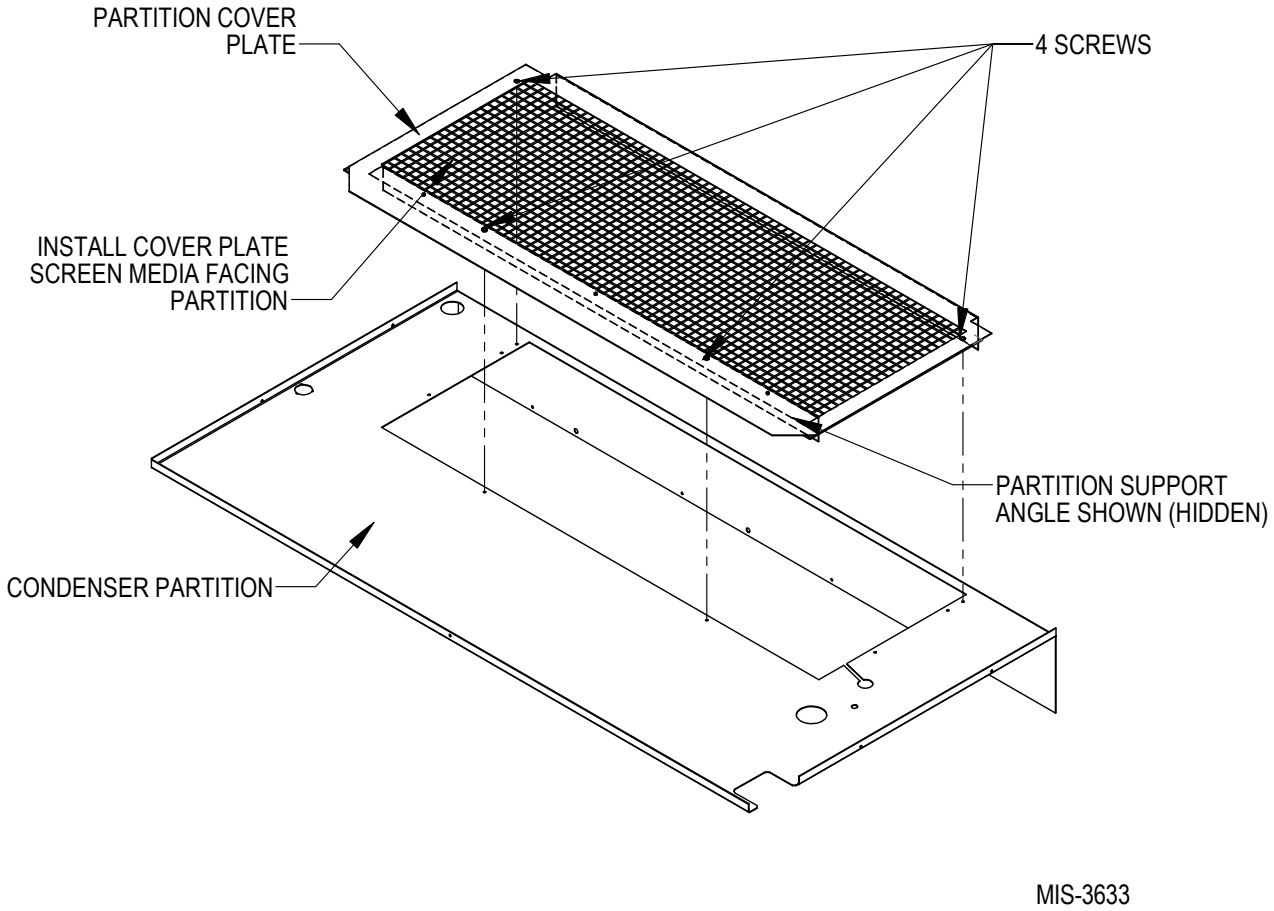

FIGURE 3
Outdoor Air Sensor Installation

TEMPERATURE ONLY

ENTHALPY

Economizer Installation

1. Locate 12-pin female low voltage terminal board wire harness with spade connectors. Pull wires gently through the lower grommet located in front of control panel so that the low voltage wires protrude underneath the unit terminal board (see Figure 4).
2. Connect all low voltage leads to the terminal board of wall mount unit as required according to installed equipment and controls. See wiring diagrams found in Figures 7-11 on pages 9-13.
3. Insert economizer into opening in wall unit between the filter rack (if not removed earlier) and condensor section, being careful not to tear unit insulation. Fully seat economizer assembly to the rear of the wall unit cavity. Slide economizer to right and line up with return air opening in back of wall unit.
4. Route the two orange wires along refrigerant lines behind the filter bracket (if applicable) to terminate at the blower partition (see Figure 5).
5. Install the mixed air temperature sensor and bracket in blower partition (see Figure 5) using the two existing holes. If necessary, remove the shield to aid in mounting the sensor (replace after mounting sensor). Insert white, two-pin sensor plug into sensor housing. Coil excess orange wires and wire tie to suction/discharge line.
6. Run black and red wire from economizer upper 12-pin wiring harness throm grommet and other bushing into the control panel and connect to the black and red wire sensor wires (see Figure 4). Wrap and wire tie the excess wire.
7. Remove front door, control door and mist eliminator from economizer hood assembly.
8. Lift economizer hood to unit and hold in position. Line up four (4) holes in outer economizer hood door (two on each side) with corresponding holes in unit and mount economizer hood to unit with four (4) screws.
9. Connect vent option front to vent hood door (see Figure 6) using ten (10) screws (supplied).
10. Connect economizer upper and lower 12-pin wiring connectors to 12-pin wiring connectors inside economizer control.
11. Re-insert filter into filter brackets. Arrow on filter should point up.
12. Attach blower access panel. For R22 units, attach additional panel.

FIGURE 4
Control Panel

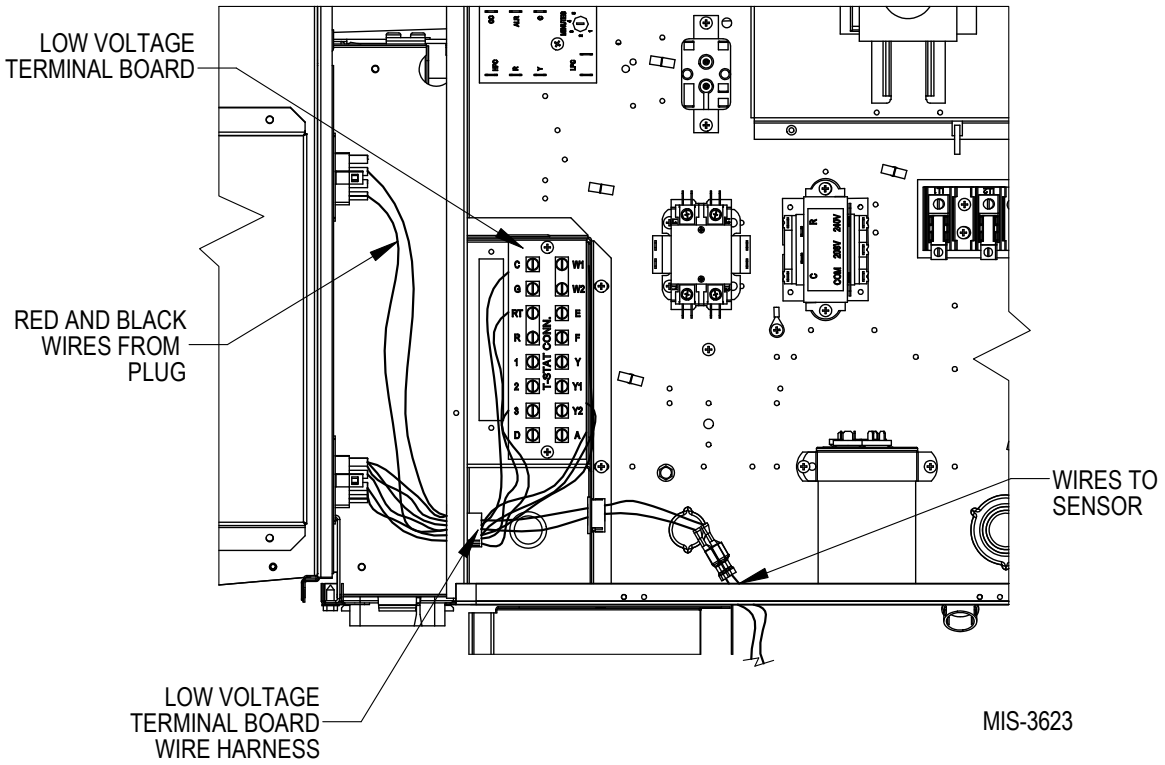

FIGURE 5
Mixed Air Temperature Sensor Installation

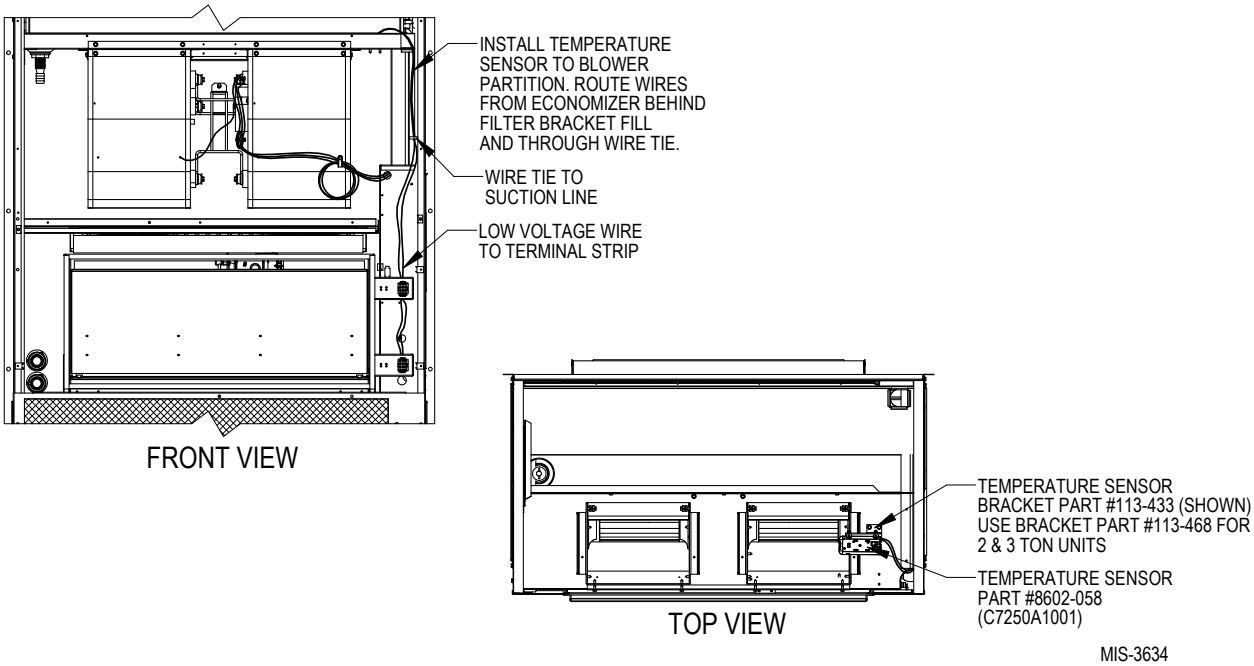

FIGURE 6
Vent Option Door Installation

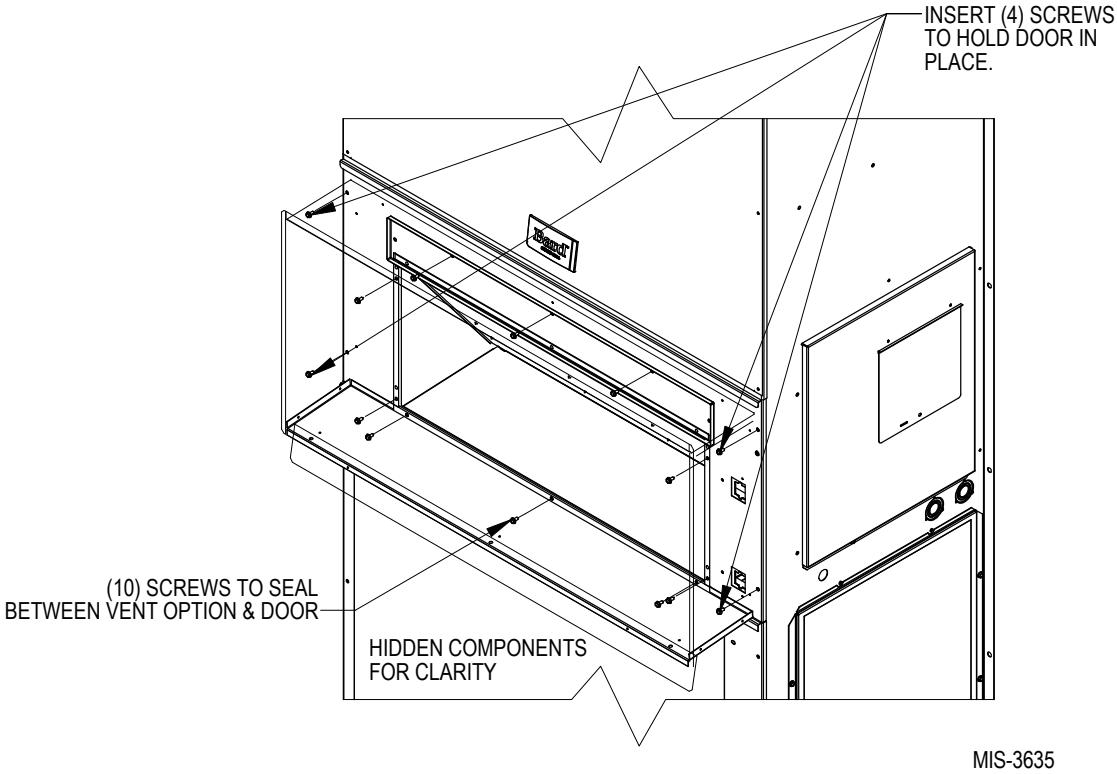

Economizer Checkout

Since observation of motor/damper operation is difficult after air hood installation, it is recommended the unit be enabled for start-up now. If no power is available, or if immediate start-up is not desired, continue with the basic installation process (see Step 4 below). The air hood assembly can be partially disassembled at a later time for start-up/checkout procedures.

1. Attach wall unit outer and indoor control panel doors.
2. Turn power to unit on.
3. Complete economizer checkout using economizer control touchpad.
4. After confirming economizer operation, attach the economizer hood mist eliminator, control door and front door.

CONTROL WIRING CONNECTION DIAGRAMS

The control wiring diagrams on the following pages represent typical control wiring for single units controlled by individual thermostats. If thermostats other than those referenced are used, the installer must verify output functions accordingly.

For dual unit installation utilizing lead/lag controller systems, complete details are contained in MC4001 Series Lead/Lag Controller installation manual 2100-563. For operation with MV4001 lead/lag controller, see MV4001 installation manual 2100-613.

FIGURE 7
1-STAGE A/C WITH OPTIONAL ELECTRIC HEAT
WITH EWM∗ STYLE ECONOMIZER

Low Voltage Wiring Diagram

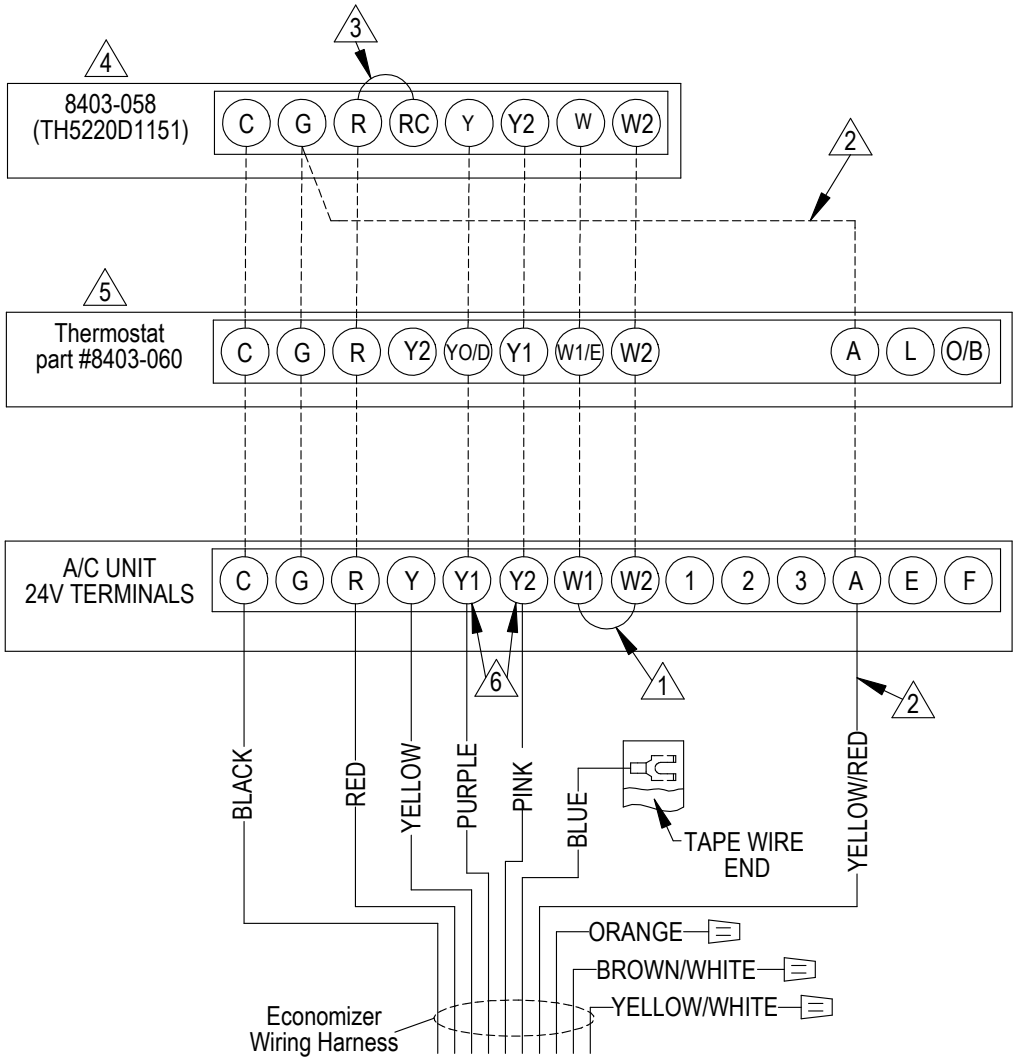

1. *Factory installed jumper. Remove for 2-stage operation on units with 15 or more kw.*
2. *Must be energized to enable minimum position. NOTE: Economizer Control Default Setting is 10V (100%). Depending upon application may require setting to lower value.*
3. *Factory Jumper Installed.*
4. *Change "system type", set up function 1, from 5 (2 heat/ 1 cool heat pump) to 6 (2 heat/ 2 cool conventional).*
5. *Change model configuration from heat pump to heat/cool, and must be configured for economizer for YO/D output to be active as first stage cooling.*
6. *Older units may not have Y1 and Y2 connections on 24v terminal block. If not present wire nuts must be used.*

MIS-2983 C

FIGURE 8
2-STAGE A/C WITH OPTIONAL ELECTRIC HEAT
WITH EWM∗ STYLE ECONOMIZER

Low Voltage Wiring Diagram

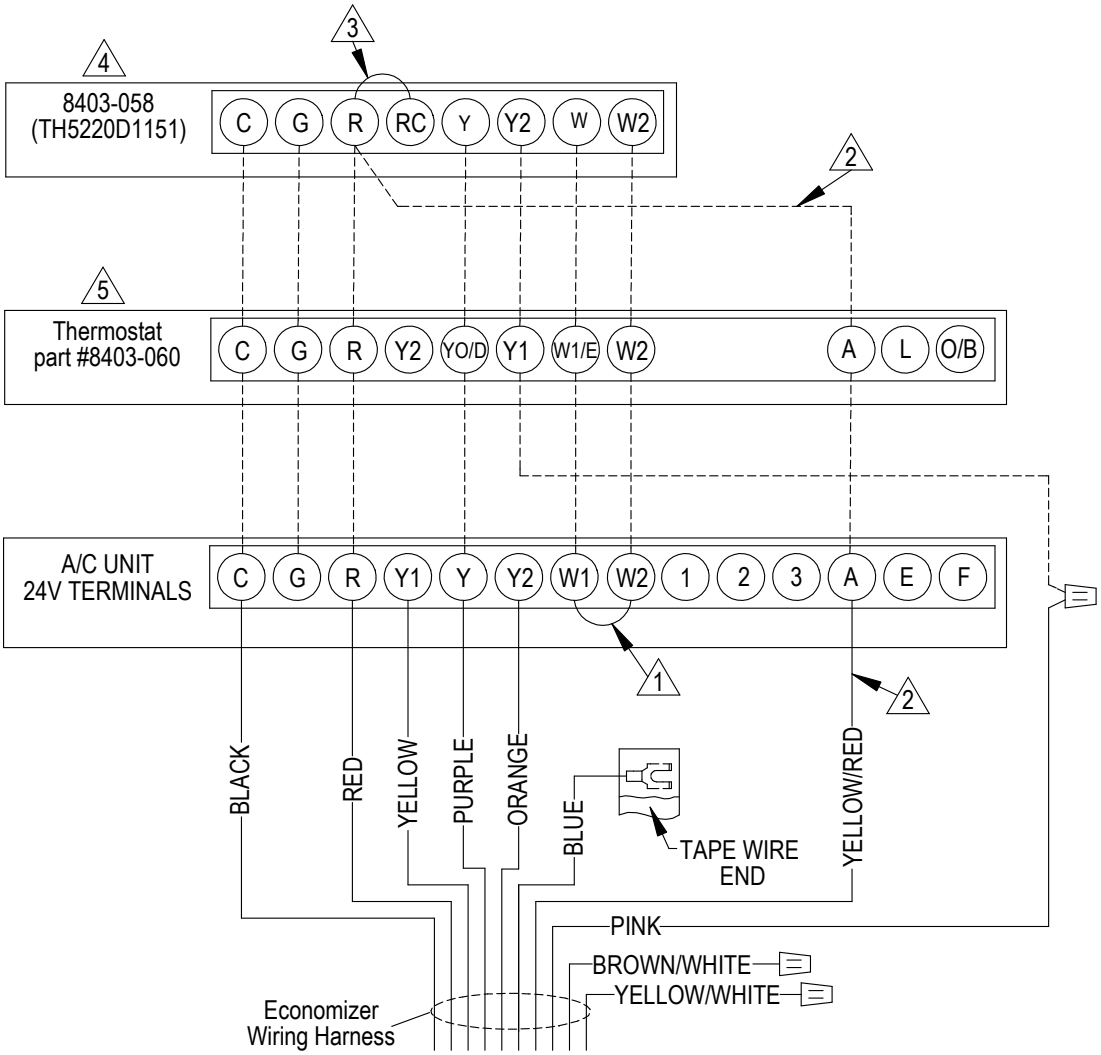

1. *Factory installed jumper. Remove for 2-stage operation on units with 15 or more kw.*
2. *Must be energized to enable minimum position. NOTE: Economizer Control Default Setting is 10V (100%). Depending upon application may require setting to lower value.*
3. *Factory Jumper Installed.*
4. *Change "system type", set up function 1, from 5 (2 heat/ 1 cool heat pump) to 6 (2 heat/ 2 cool conventional).*
5. *Change model configuration from heat pump to heat/cool, and must be configured for economizer for YO/D output to be active as first stage cooling.*

MIS-2984 C

FIGURE 9
1-STAGE HEAT PUMP WITH OPTIONAL ELECTRIC HEAT
WITH EWM∗ STYLE ECONOMIZER

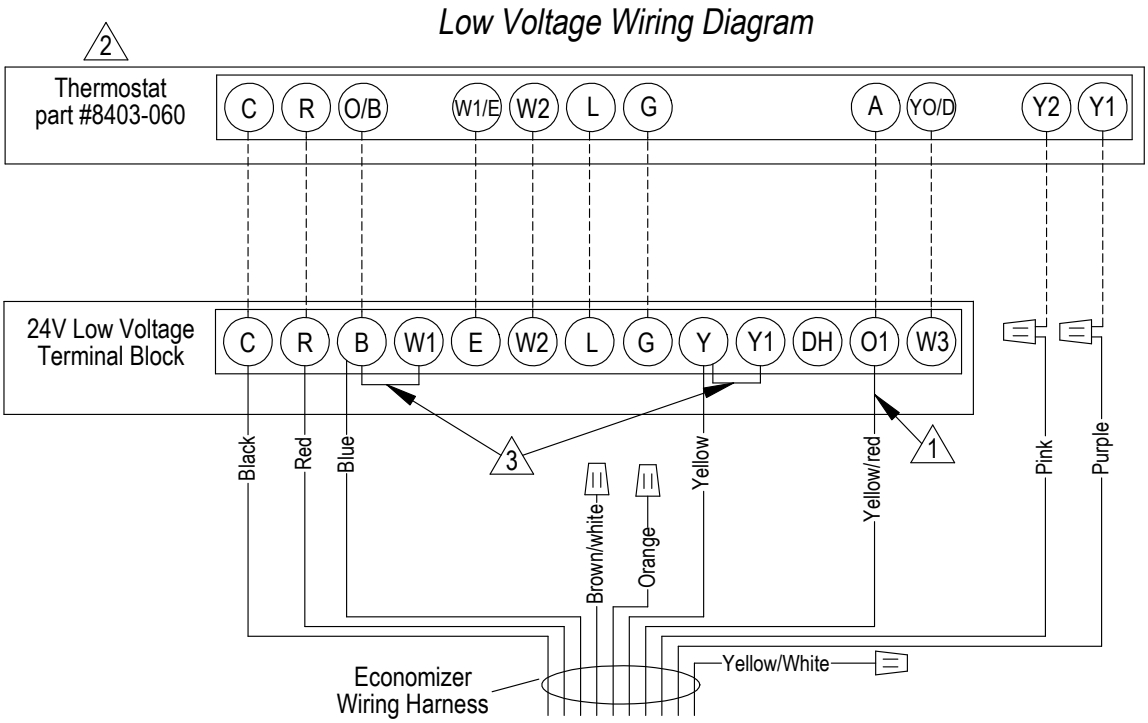

1 *Must be energized to enable minimum position. NOTE: Economizer Control Default Setting is 10V (100%). Depending upon application may require setting to lower value.*

2 *Must be configured for heat pump / multistage/ no economizer/ to enable YO/D output to be active as dehumidification output*

3 *Factory Jumper Installed.*

MIS-2981 B

FIGURE 10
2-STAGE HEAT PUMP WITH OPTIONAL ELECTRIC HEAT
WITH EWM∗ STYLE ECONOMIZER

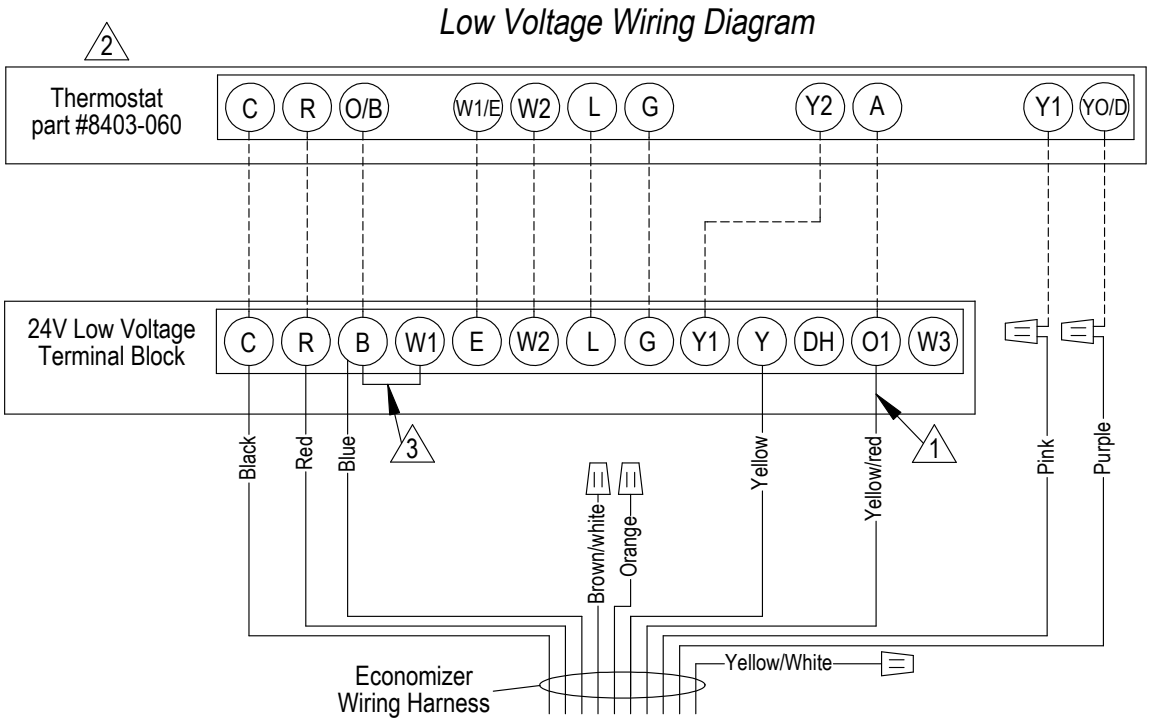

1 *Must be energized to enable minimum position. NOTE: Economizer Control Default Setting is 10V (100%). Depending upon application may require setting to lower value.*

2 *Must be configured for heat pump and economizer to enable YO/D output to be active as 1st-stage cooling*

3 *Factory Jumper Installed.*

MIS-2982 B

FIGURE 11
2-STAGE HEAT PUMP WITH DEHUMIDIFICATION & OPTIONAL ELECTRIC HEAT WITH EWM∗ STYLE ECONOMIZER

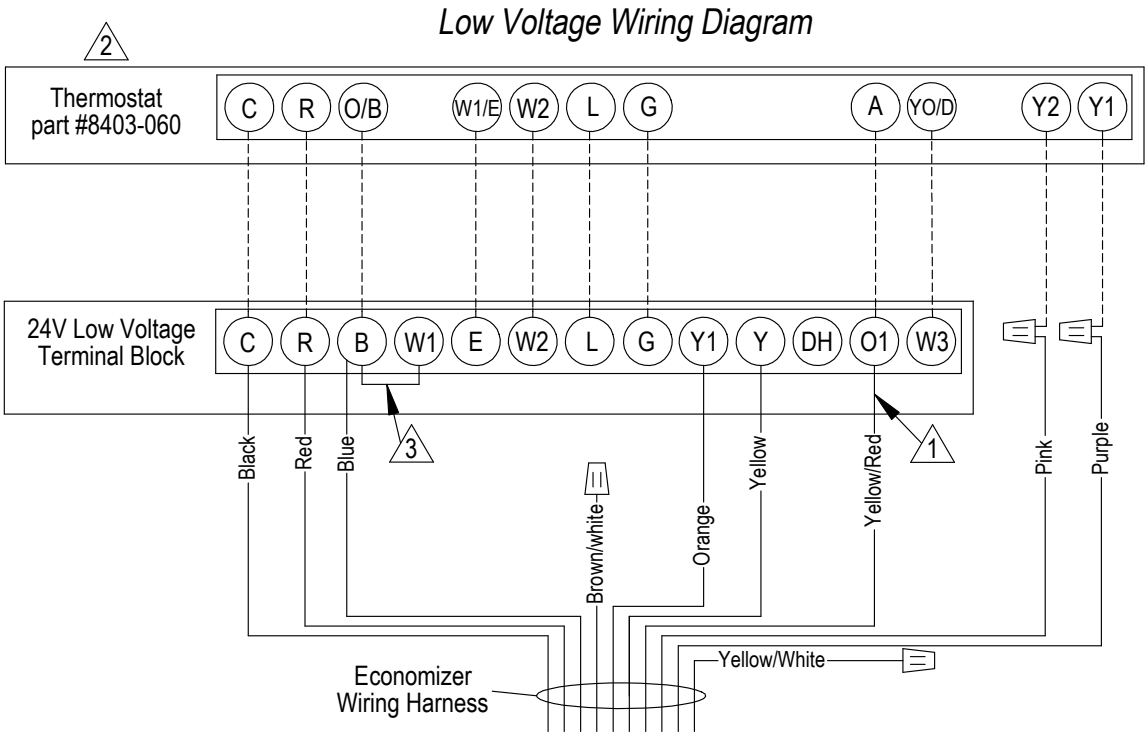

1 *Must be energized to enable minimum position. NOTE: Economizer Control Default Setting is 10V (100%). Depending upon application may require setting to lower value.*

2 *Must be configured for heat pump / no economizer/ to enable YO/D output to be active as dehumidification output*

3 *Factory Jumper Installed.*

MIS-2995 B

START-UP/CHECKOUT PROCEDURES

JADE™ ECONOMIZER CONTROLLER

W7220 controller offers unparalleled flexibility and expansion in a dependable and solid electronic platform.

- Multiple economizer applications from one controller.
- Nearly limitless customization of setpoints.
- Internal checkout menu provides fast performance assessment.
- Alarms menu provides assistance in troubleshooting.

Memory: User-defined setpoints remain in non-volatile flash memory regardless of electrical outage duration. Control voltage below 18V may cause erratic performance.

FIGURE 12
JADE™ Economizer Controller

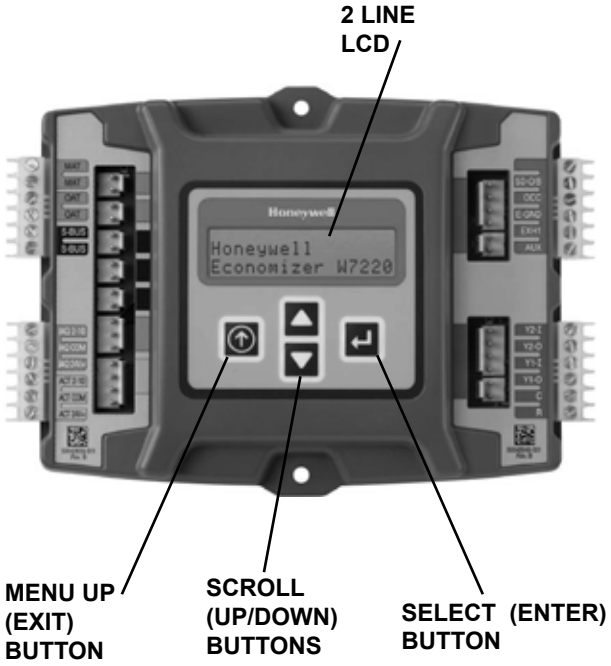

From the factory, the **JADE™** economizer controller has been preset with "default" values that were pre-determined as optimum for equipment buildings, and these are shown in Tables 2 – 4. However, it is important to review and/or customize these operational values per owner specifications in order to guarantee satisfactory performance. The installing contractor can easily access the JADE™ programming by the integral keypad and LCD display.

There are six (6) basic MENU categories to navigate:

1. **STATUS** – provides real-time access to sensor input, damper and equipment operation.
2. **SETPOINTS** – customizable operational parameters.
3. **SYSTEM SETUP** – customizable application programming (see Revew/Customize System Setup).
4. **ADVANCED SETUP** – further application and operational options.
5. **CHECKOUT** – instantly activate and verify economizer functions.
6. **ALARMS** – displays alarms and pinpoints problem areas.

Review/Customize System Setup

Before being placed in service, the **JADE™** economizer controller programming should be reviewed/customized through the following steps:

1. **SYSTEM SETUP:** from the main screen, press the ***SCROLL (UP/DOWN) BUTTONS*** to navigate through the six (6) basic menu items to the **SYSTEM SETUP** menu.

– Push the **SELECT (ENTER) BUTTON** to choose the **SYSTEM SETUP** menu.

– Navigate through the multiple levels of **SYSTEM SETUP** by pushing the ***SCROLL (UP/DOWN) BUTTONS***.

– To change a specific parameter in the **SYSTEM SETUP** menu, press the ***SELECT (ENTER) BUTTON*** to display its current value. Press the ***SCROLL (UP/DOWN) BUTTONS*** to change or increase/decrease value. Press the ***SELECT (ENTER) BUTTON*** to save the new customized value—**"CHANGE STORED"** will be displayed. Press the ***SELECT (ENTER) BUTTON*** again to return to current menu parameter.

– For specific **SYSTEM SETUP** level information, refer to **Table 2**.

NOTE: During an extended level of inactivity, the display of the JADE™ economizer controller will begin to automatically scroll through the various levels of the STATUS menu as a screensaver. Each level will stay for approximately 5 seconds before changing to the next level.

TABLE 2
SYSTEM SETUP MENU LEVELS

Menu Level	Default Value	Range	Notes
INSTALL	01/01/10		Display Order = MM/DD/YY Setting Order = DD/MM/YY
UNITS DEG	°F	°F / °C	Sets controller to read in either measurements
EQUIPMENT	HP(B)	HP	Heat Pump HP CONV = A/C ✳
AUX IN	HP(B)	HP(O) HP(B	Energize on Cool ✳ Energize on Heat
FAN SPEED	1 Speed	1 Speed 2 Speed	
FAN CFM	5000	100 to 15000	Not applicable
AUX OUT	EXH2	NONE ERV EXH2 SYS	Product can be used to signal other devices
OCC	INPUT	INPUT or ALWAYS	INPUT is for dedicated OCC signal, ALWAYS is for all other situations
FACTORY DEFAULT	NO	YES or NO	Resets to factory defaults if changed to YES

✳ In SYS SETUP, the correct Equipment setting is HP and for the AUX2 IN is HP (B) in all applications. This is correct for both air conditioner and heat pump equipment in order to have correct operating sequences for the economizers. DO NOT change to CONV = A/C setting just because the equipment is an air conditioner and not a heat pump.

2. **ADVANCED SETUP:** from the main screen, press the ***SCROLL (UP/DOWN) BUTTONS*** to navigate through the six (6) basic menu items to the **ADVANCED SETUP** menu.

- Push the **SELECT (ENTER) BUTTON** to choose the **ADVANCED SETUP** menu.
- Navigate through the multiple levels of **ADVANCED SETUP** by pushing the ***SCROLL (UP/DOWN) BUTTONS***.
- To change a specific parameter in the **ADVANCED SETUP** menu, press the ***SELECT (ENTER) BUTTON*** to display its current value. Press the ***SCROLL (UP/DOWN) BUTTONS*** to change or increase/decrease value. Press the ***SELECT (ENTER) BUTTON*** to save the new customized value—**"CHANGE STORED"** will be displayed. Press the ***SELECT (ENTER) BUTTON*** again to return to current menu parameter.
- For specific **ADVANCED SETUP** level information, refer to **Table 3**.

TABLE 3
ADVANCED SETUP MENU LEVELS

Menu Level	Default Value	Range	Notes
MA LOW SET	45°F	35-55°	Temp to activate freeze protection — Close Damper
FREEZE POS	CLO	CLO or MIN	Damper position upon freeze protection
STG3 DLY	15 MIN	0 to 4.0h or OFF	Delay for 3rd Stage Cooling – allows for 3 stages of cooling, one stage for econ & two stages for compressor
DMPR POS	CLO	CLO or OPN	Where damper goes upon shutdown signal
MA T CAL	0.0°F	+/-2.5°F from actual reading	Mixed Air Sensor temperature calibration
OA T CAL	0.0°F	+/-2.5°F from actual reading	Outdoor Air Sensor temperature calibration
OAS H CAL	0%	+/-10% from actual reading	Outdoor Air Humidity Sensor calibration for economizers using temp/humidity sensor

3. **SETPOINTS:** from the main screen, press the ***SCROLL (UP/DOWN) BUTTONS*** to navigate through the six (6) basic menu items to the **SETPOINTS** menu.

- Push the **SELECT (ENTER) BUTTON** to choose the **SETPOINTS** menu.
- Navigate through the multiple levels of **SETPOINTS** by pushing the ***SCROLL (UP/DOWN) BUTTONS***.
- To change a specific parameter in the **SETPOINTS** menu, press the ***SELECT (ENTER) BUTTON*** to display its current value. Press the ***SCROLL (UP/DOWN) BUTTONS*** to change or increase/decrease value. Press the ***SELECT (ENTER) BUTTON*** to save the new customized value—**"CHANGE STORED"** will be displayed. Press the ***SELECT (ENTER) BUTTON*** again to return to current menu parameter.
- For specific **SETPOINTS** level information, refer to **Table 4**.

TABLE 4
SETPOINTS MENU LEVELS

Menu Level	Default Value	Range	Notes
MAT SET	53°F	38°F to 65°F	Mixed Air Temperature setpoint at which the economizer damper will begin to modulate to maintain setting
LOW T LOCK	0°F	-45°F to 80°F	Low outdoor ambient temperature for compressor lockout
DRYBLB SET	70°F	48°F to 80°F	Maximum outdoor temperature setting for "free" economizer cooling
ENTH CURVE	ES3	ES1, ES2, ES3, ES4 or ES5	Enthalpy boundary "curves" for economizers using temp/humidity sensor, see "Enthalpy Settings" explanation
MIN POS	10V	2 to 10 VDC	Actuator voltage for Minimum Position – see Minimum Position Vent Setup Note below
EXH1	50%	0 to 100%	Setpoint for damper if exhaust fan is powered by economizer
EXH2	6%	0 to 100%	Setpoint for AUX output signal

NOTE: At this point, the economizer assembly should be fully functional and ready for preliminary testing.

4. **CHECKOUT:** from the main screen, press the ***SCROLL (UP/DOWN) BUTTONS*** to navigate through the six (6) basic menu items to the **CHECKOUT** menu.

- Push the **SELECT (ENTER) BUTTON** to choose the **CHECKOUT** menu.
- Navigate through the multiple levels of **CHECKOUT** by pushing the ***SCROLL (UP/DOWN) BUTTONS***.
- To perform a specific test in the **CHECKOUT** menu, press the ***SELECT (ENTER) BUTTON*** to choose a particular exercise, **"RUN?"** will appear. Press the ***SELECT (ENTER) BUTTON*** again to activate this exercise. After a short pause, **"IN PROGRESS"** will appear as the test activates. **"DONE"** will display after the test is complete. Press the ***MENU UP (EXIT) BUTTON*** to end the test and/or turn off the activated relay.
- For specific **CHECKOUT** level information, refer to **Table 5**.

NOTE: **CHECKOUT** functions bypass the normal 5-minute delay for compressor protection. Be sure to allow for enough time to pass between tests so the compressor is not damaged from extreme short-cycling.

TABLE 5
CHECKOUT MENU LEVELS

Menu Level	Notes
DAMPER VMIN-HS	Positions damper to the minimum amount of opening allowed by actuator
DAMPER VMAX-HS	Opens damper to the MIN POS level indicated in the **SETPOINTS** menu. See Minimum Position Ventilation Setup Procedure (Pg. 16)
DAMPER OPEN	Forces damper to full open position, energizes exhaust contacts
DAMPER CLOSE	Positions damper to completely closed position
CONNECT Y1-O	Forces Y1-OUTPUT to compressor
CONNECT Y2-O	Forces Y2-OUTPUT to compressor
CONNECT AUX	Depending upon AUX OUT setting from **SETUP** menu: NONE – no action ERV – 24VAC out for ERV & NOT Economizer SYS – 24VAC out for alarm

NOTE: Economizer assembly should be ready to put into service. At any point during operation, in economizer mode or idle, real-time information from sensors and integral components can be accessed from the **STATUS** menu.

5. **STATUS:** from the main screen, press the ***SCROLL (UP/DOWN) BUTTONS*** to navigate through the six (6) basic menu items to the **STATUS** menu.

- Push the **SELECT (ENTER) BUTTON** to choose the **STATUS** menu.
- Navigate through the multiple levels of **STATUS** by pushing the ***SCROLL (UP/DOWN) BUTTONS***.
- As the **STATUS** menu simply gives input/output information in real-time, there is no way to change or otherwise alter the displayed criteria. It is simply a window into the operation of the economizer controller.
- For specific **STATUS** level information, refer to **Table 6**.

NOTE: Upon power-up (or after power failure or low voltage condition), the controller will begin a 5-minute time delay before enabling mechanical cooling.

MINIMUM POSITION NOTE: Minimum position setting has been preset to 10V which when connected to MC4001 Lead/Lag Controller System will allow economizer to drive wide open per emergency ventilation strategy as detailed in MC4001 Instructions. This may require resetting to a lower value per job specifications.

TABLE 6
STATUS MENU LEVELS

Menu Level	Default Value	Notes
ECON AVAIL	YES/NO	Indicates if conditions are favorable for economizing
ECONOMIZING	YES/NO	Indicates if economizer is actively economizing
OCCUPIED	YES/NO	Indicates if dedicated 24V occupied signal is being received on terminal OCC
HEAT PUMP	COOL/HEAT	Displays actual compressor use if in HEAT PUMP mode
COOL Y1-IN	ON/OFF	Indicates if 24V signal is being received on terminal Y1-I
COOL Y1-OUT	ON/OFF	Displays if controller is actively calling for mechanical compressor cooling (24V on Y1-O)
COOL Y2-IN	ON/OFF	Indicates if 24V signal is being received on terminal Y2-I
COOL Y2-OUT	ON/OFF	Displays if controller is actively calling for Stg. 2 cooling (24V on Y2-O)
MA TEMP	0° to 140°F	Current mixed air temp
OA TEMP	-40° to 140°F	Current outdoor air temp
OA HUM	0% to 100%	Current outdoor air humidity for economizers using temp/humidity sensor
DAMPER OUT	2.0 to 10.0	Displays voltage to actuator
ACT POS	0 to 100%	Current % of opening
ACT COUNT	N/A	Current count of actuator cycles from installation
ACTUATOR OK	YES/NO	Indicates potential fault
EXH1 OUT	ON/OFF	Output of EXH1 Terminal
MECH COOL ON	0, 1, or 2	Stages of mechanical cooling currently active

NOTE: If there are any potential problems recognized by the economizer controller, it may be registered in the form of an alarm in the **ALARM(S)** menu. If there is a period of inactivity AND there is an alarm registering, the controller will randomly scroll through the **ALARM(S)** menu items as a screensaver.

ALARM(S): from the main screen, press the ***SCROLL (UP/DOWN) BUTTONS*** to navigate through the six (6) basic menu items to the **ALARM(S)** menu.

– Push the **SELECT (ENTER) BUTTON** to choose the **ALARM(S)** menu.

– Navigate through the current alarms in **ALARM(S)** by pushing the ***SCROLL (UP/DOWN) BUTTONS***.

– Once the alarm has been identified, and the cause has been removed (e.g., replaced faulty sensor), the alarm may erase itself. If a manual alarm-erasing is required, it can be cleared from the display by navigating to the desired alarm and pressing the ***SELECT (ENTER) BUTTON*** to choose that specific alarm. **"ERASE?"** will display. Press the ***SELECT (ENTER) BUTTON*** again. **"ALARM ERASED"** will appear. Press the ***MENU UP (EXIT) BUTTON*** to complete the action and return to the previous menu.

– For specific **ALARM(S)** information, refer to **Table 7**.

TABLE 7
ALARM EXAMPLES

Alarm(s)	Notes
MA T SENS ERR	Malfunctioning mixed air sensor
OA T SENS ERR	Malfunctioning outdoor air sensor
ACT STALLED	Actuator cannot reach desired percentage of opening
SYS ALARM	If AUX is set to SYS in SETPOINTS menu, SYS will display upon any registered alarm
NOTE: This is not a complete list of alarms. Additional alarms will display depending upon the parameter settings and configuration and attached equipment.	

ENTHALPY SETTINGS

If economizer is enthalpy-based, and was shipped with the temp/humidity sensor, the economizer must be programmed for the specific enthalpy curve boundary desired for "free" outdoor cooling. The available enthalpy boundaries are all subject to specific OA temperature, OA humidity, and OA dew points. If all of the OA conditions are below the specific points outlined in each boundary, the conditions are good to economize and economizer mode is set to "YES". If some or all the OA conditions are above the specific points outlined in each boundary, the conditions are not good to economize and the economizer mode is set to "NO".

ES3 is Factory Default.

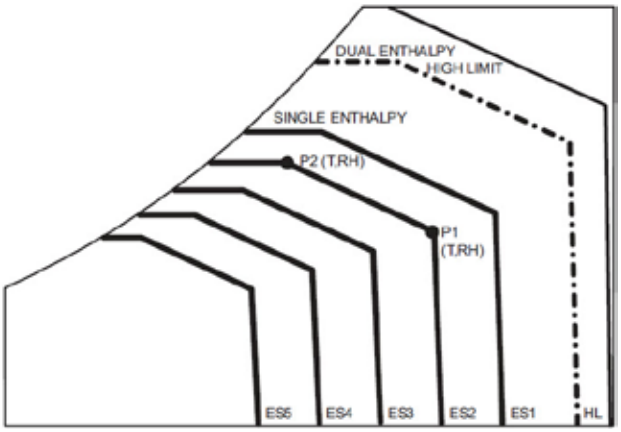

Enthalpy Curve	Temp. Dry Bulb (°F)	Temp. Dewpoint (°F)	Enthalpy (btu/lb/da)	Point P1		Point P2	
				Temp. °F	Humidity %RH	Temp. °F	Humidity %RH
ES1	80.0	60.0	28.0	80.0	36.8	66.3	80.1
ES2	75.0	57.0	26.0	75.0	39.6	63.3	80.0
ES3	70.0	54.0	24.0	70.0	42.3	59.7	81.4
ES4	65.0	51.0	22.0	65.0	44.8	55.7	84.2
ES5	60.0	48.0	20.0	60.0	46.9	51.3	88.5
HL	86.0	66.0	32.4	86.0	38.9	72.4	80.3

ECONOMIZER SEQUENCE OF OPERATION

Condition – Cool/Dry OA Conditions

- 1st Stage Cooling closes and sends signal to **JADE™** control. Since the air temperature outside is cooler than the preset **DRYBULB SET** setting, or is below the **ENTH CURVE** boundary in the **SETPOINTS** menu, the actuator will power the economizer damper to "economizer" mode as the indoor blower motor starts. The mixed air sensor senses a mixture of return air and cool outdoor air and modulates opening to achieve preset **MAT SET** setting in **SETPOINTS** menu. Compressor operation is inhibited (see Figure 13).
- 2nd Stage Cooling closes and sends a signal to **JADE™** control, which closes the Y1-O relay to begin mechanical cooling. **The economizer damper REMAINS OPEN in tandem operation with the compressor** as long as the OA conditions do not drop below the preset **DRYBULB SET/ ENTH CURVE** settings in the **SETPOINTS** menu (see Figure 14).
- 3rd Stage Cooling (if available) closes and sends a signal to **JADE™** control, which closes the Y2-O relay to begin 2nd stage mechanical cooling. **The economizer damper REMAINS OPEN in tandem operation with the compressor** as long as the temperature outside does not drop below the preset **DRYBULB SET** setting in the **SETPOINTS** menu (see Figure 14).

Condition – Warm/Humid OA Conditions

- 1st Stage Cooling closes and sends signal to **JADE™** control. Since the OA conditions are above the preset **DRYBULB SET/ENTH CURVE** setting in the **SETPOINTS** menu, the control will simply close the Y1-O relay to initiate mechanical cooling. **The economizer damper will remain closed or in a minimum ventilation setting depending upon occupied status** (see Figure 15 on page 20).
- 2nd Stage Cooling (if available) closes and sends a signal to **JADE™** control. Since the OA conditions are still above than the preset **DRYBULB SET/ ENTH CURVE** setting in the **SETPOINTS** menu, the control will simply close the Y2-O relay to initiate 2nd stage mechanical cooling. **The economizer damper will remain closed or in a minimum ventilation setting depending upon occupied status** (see Figure 15).

FIGURE 13
100% Outside Airflow Path

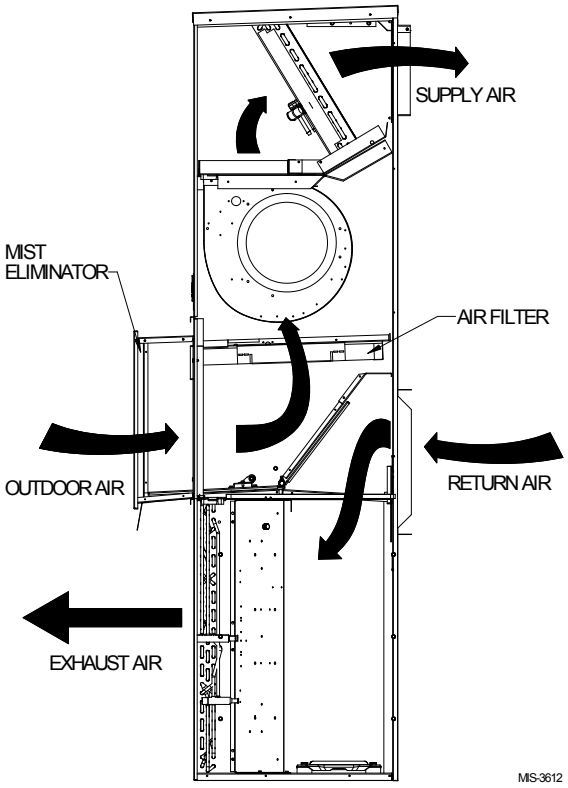

FIGURE 14
Mixed Airflow Path

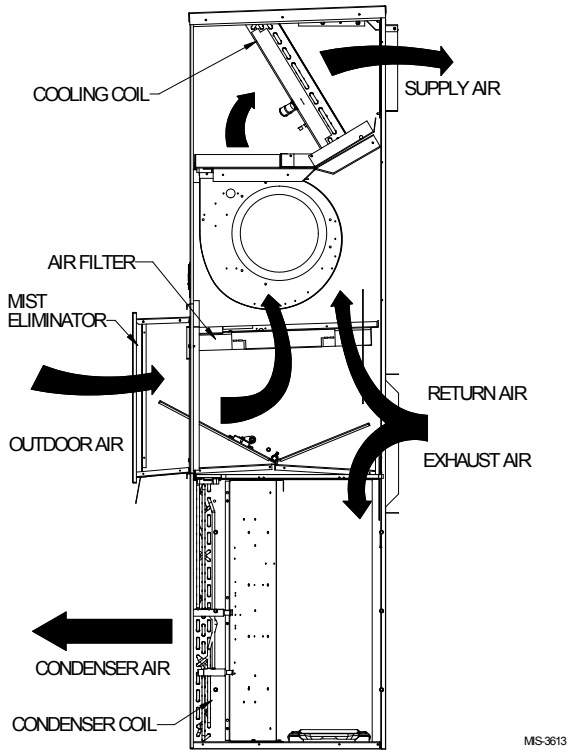

FIGURE 15
100% Closed Loop Airflow Path

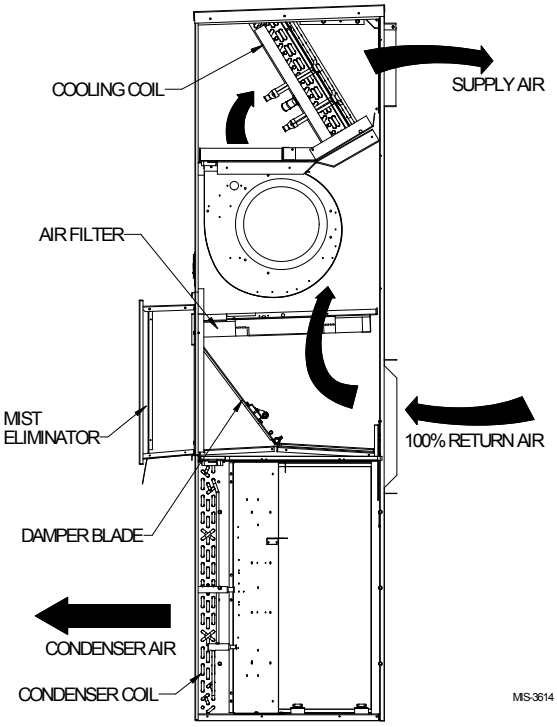

Economizer Operation for Single Stage:

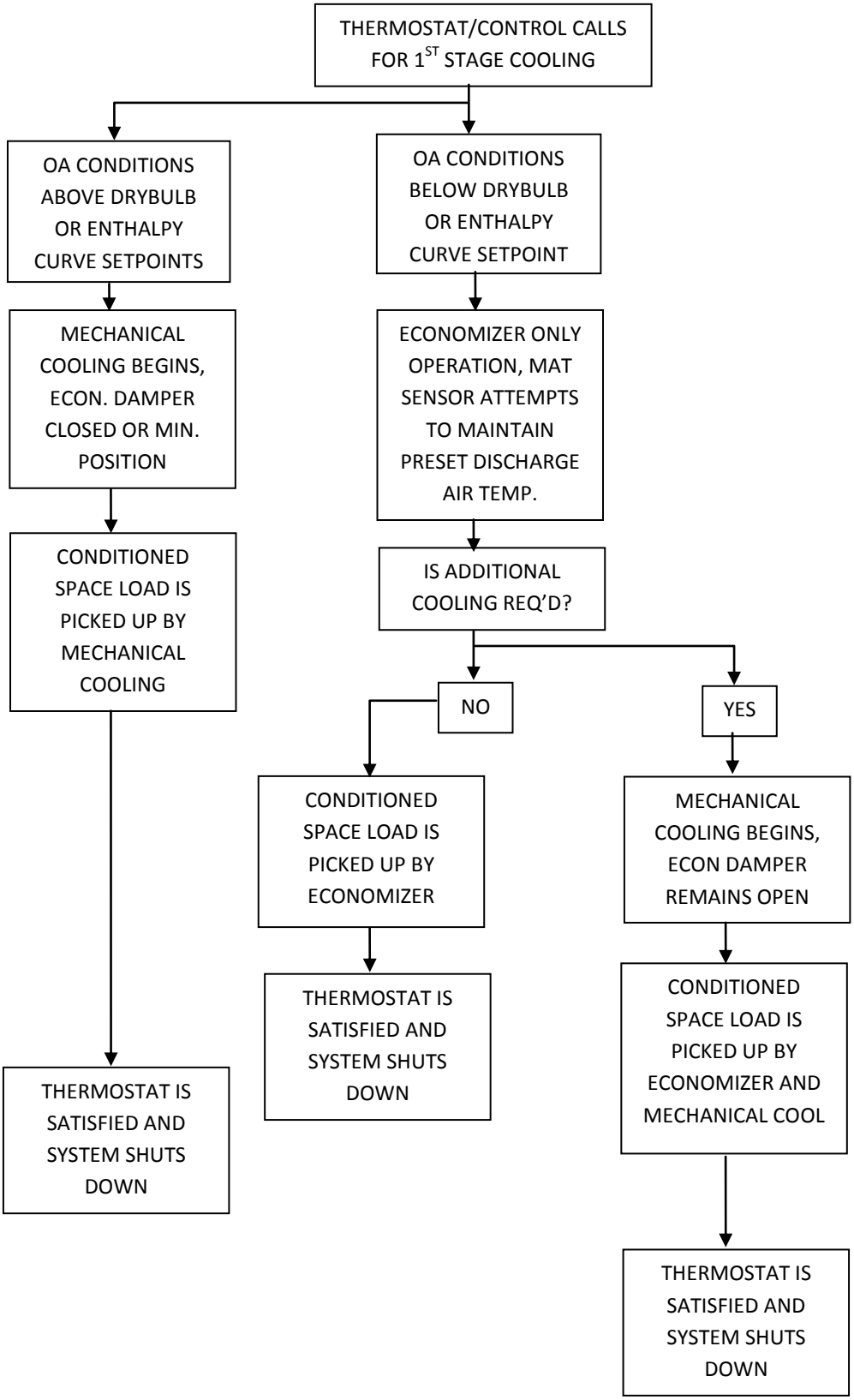
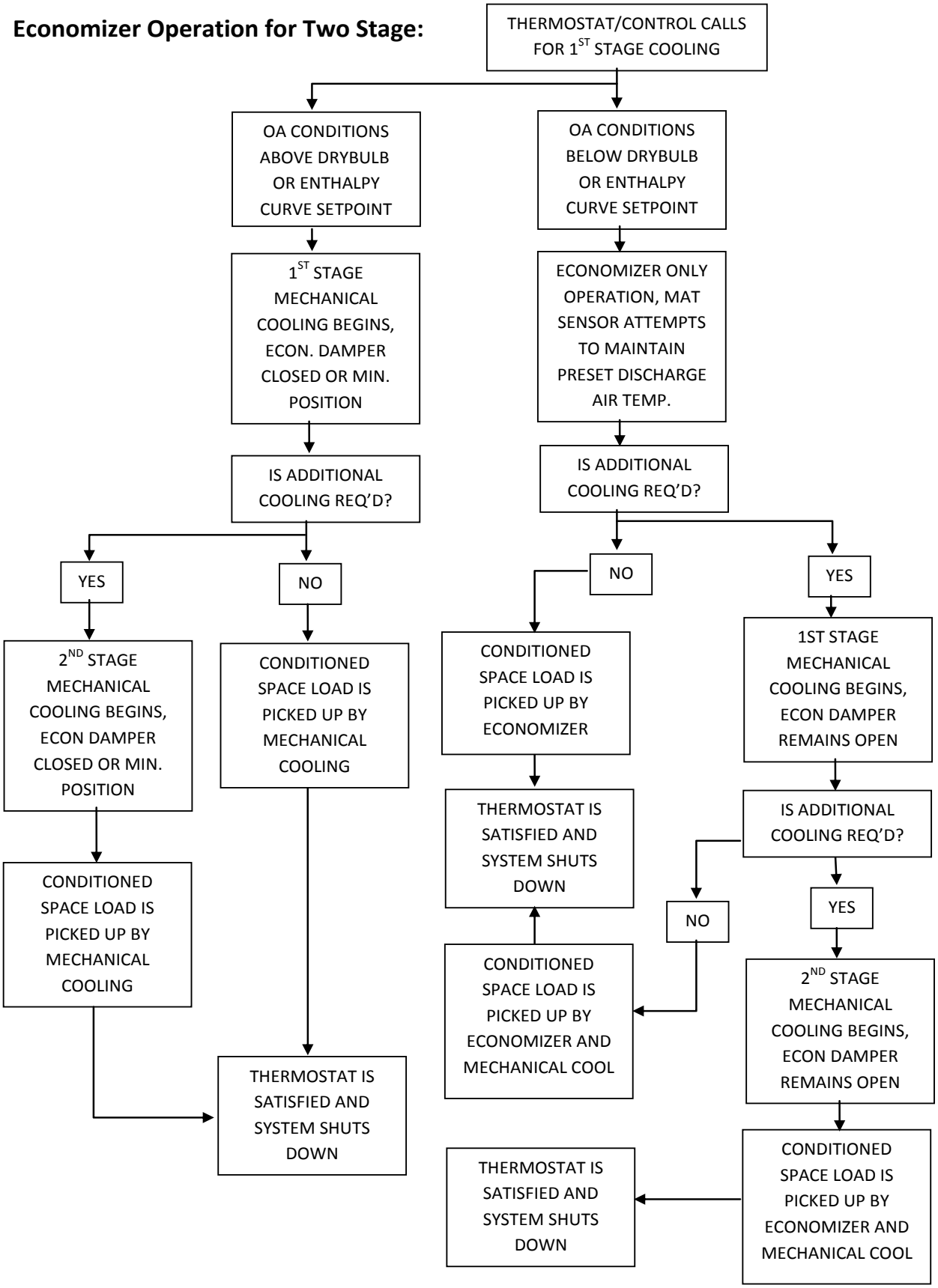
Economizer Operation for Two Stage: