INSTALLATION INSTRUCTIONS & REPLACEMENT PARTS LIST

MV5000 SERIES SOLID STATE DUAL UNIT LEAD/LAG CONTROLLER

FOR USE WITH H-SERIES WALL MOUNT AIR CONDITIONERS

Bard®
SINCE 1914
Climate Control Solutions

Bard Manufacturing Company, Inc.
Bryan, Ohio 43506
www.bardhvac.com

Manual No.: 2100-636E
Supersedes: 2100-636D
Date: 7-20-16

CONTENTS

Getting Other Information and Publications.....3
Shipping Damage 4
General.....4
Theory of Operation 4
Controller Certifications.....4
Specifications/Features for MV5000-B Series Controller.....4
Mounting the Controller.....5
Temperature Sensors.....5
Temperature Sensor Logic 5
Basic MV5000 Controller Input/Output Specifications 6
Specifications/Features for MV5000-B & -BC Controller Alarm 6
Low Voltage Field Wiring 7
Controller Wiring.....7
Controller Grounding.....7
Controller Power-Up.....7
Fire Suppression Circuit 8
Staging Delay Periods 8
Blower Operation.....8
Advance (Swap) Lead/Lag Unit Feature.....8
Accelerate Timer Feature.....8
Remote Override Codes 8
General Programming Overview 9
Humidity Control Option.....10
Cooling Operating Sequences for Alternating Lead/Lag/Lead/Lag Configuration.....10
Cooling Operating Sequences for Non-Alternating Lead/Lead/Lag/Lag Configuration.....11
Heating Sequence of Operation.....12
Specifications for Optional Remote Communication Board.....13
Security (Locking) Feature.....17
Generator Run/Economizer Shutdown Feature 17
Backup DC Power Connection 17
Economizer Failure Alarm.....33
2-Compressor Run Alarm.....33
Generator Run/Economizer Shutdown Feature 33
Compressor Switch to Lag Unit, Latching Lights and Lockout Lead Features.....33
Alarm Wiring 33
2nd Stage Cooling Alarm.....33
Refrigerant Pressure Alarms.....33
Emergency Ventilation Sequence.....33
Lead/Lag Controller Failure Alarm.....34
Programming Instructions.....37

Figures

– – – Alarm LED Display Board 7
– – – CB5000 Communication Board 13
Figure 1 MV5000-BC Controller With Alarm Board and Communication Board and 1-or 2-Stage H**A/H**L or HA*S/HL*S Series 4 Units With Economizers 20
Figure 2 MV5000-B Controller With Alarm Board and 1-or 2-Stage H**A/H**L or HA*S/HL*S Series 4 Units With Economizers 21
Figure 3 MV5000-B Controller With Alarm Board and 1-Stage H**A/H**L Series 4 Units.....22
Figure 4 MV5000 Controller and 1-Stage H**A/H**L Series 4 Units.....23
Figure 5 MV5000-B Controller With Alarm Board and 2-Stage HA*S/HL*S Series 4 Units.....24
Figure 6 MV5000 Controller and 2-Stage HA*S/HL*S Series 4 Units.....25
Figure 7 MV5000-BC Controller With Alarm Board and Communication Board and 1-Stage W**A/W**L Units With Economizers 26
Figure 8 MV5000-B Controller With Alarm Board and 1-Stage H**A/H**L Series 2 Units.....27
Figure 9 MV5000-B Controller With Alarm Board and 2-Stage HA*S/HL*S Series 2 Units.....28
Figure 10 MV5000-BC Controller With Alarm Board and Communication Board and 1-Stage H**A/H**L Series 2 Units.....29
Figure 11 MV5000-BC Controller With Alarm Board and Communication Board and 2-Stage HA*S/HL*S Series 2 Units.....30
Figure 12 MV5000-B Controller With Alarm Board and 1-Stage H**A/H**L Series 2 Units With ECONWMT Economizers and 31
Figure 13 MV5000-BC Controller With Alarm Board and Communication Board and 1-Stage H**A/H**L Series 2 Units With ECONWMT Economizers 32
Figure 14 Alarm Board Connections for Normally Closed "NC" Open-on-Alarm Strategy.....35
Figure 15 Alarm Board Connections for Normally Open "N)" Close-on-Alarm Strategy.....36
Figure 16 Parts List Drawing 38
– – – MV Series Label 40

Tables

– – – Controller Programmable Features and Default Settings 9
Table 1 Unit Low Voltage Terminal Connection Chart – MV Series Controller.....18
Table 2 MV Relay Board Jumpers J1 – J4
Table 3 Connection Diagram Selection 19
– – – Parts List.....39

GETTING OTHER INFORMATION AND PUBLICATIONS

These publications can help when installing the furnace. They can usually be found at the local library or purchased directly from the publisher. Be sure to consult the current edition of each standard.

Standard for the Installation ..... ANSI/NFPA 90A
of Air Conditioning and
Ventilating Systems

Standard for Warm Air Heating..... ANSI/NFPA 90B
and Air Conditioning Systems

For more information, contact these publishers:

ACCA **Air Conditioning Contractors of America**
1712 New Hampshire Avenue, NW
Washington, DC 20009
Telephone: (202) 483-9370
Fax: (202) 234-4721

ANSI **American National Standards Institute**
11 West Street, 13th Floor
New York, NY 10036
Telephone: (212) 642-4900
Fax: (212) 302-1286

ASHRAE **American Society of Heating, Refrigerating, and Air Conditioning Engineers, Inc.**
1791 Tullie Circle, N.E.
Atlanta, GA 30329-2305
Telephone: (404) 636-8400
Fax: (404) 321-5478

BARD **Bard Manufacturing Company, Inc.**
1914 Randolph Drive
Bryan, OH 43506
Telephone: (419) 636-1194
Fax: (419) 636-2640

** IMPORTANT **

The equipment covered in this manual is to be installed by trained, experienced service and installation technicians. Please read entire manual before proceeding.

SHIPPING DAMAGE

Upon receipt of equipment, the carton should be checked for external signs of shipping damage. If damage is found, the receiving party must contact the last carrier immediately, preferably in writing, requesting inspection by the carrier's agent.

GENERAL

These instructions explain the operation, installation and troubleshooting of the MV5000 Series controller.

All internal wiring is complete. Only attach low voltage field wiring to designated terminal strips.

The MV5000 is for use with units with or without economizers, can be configured for use with heat pumps and has a dehumidification control feature if an optional humidity controller is connected.

Each unit should be sized to handle the total load of the structure if 100% redundancy is required.

The MV5000 controller is suitable for both 50 and 60 HZ operation, and is fully configurable such that it can be used in virtually any installation. See Controller Programmable Features and Default Settings.

THEORY OF OPERATION

The controller is used to control two wall mount air conditioners from one control system. It provides total redundancy for the structure and equal wear on both units. It can be used with units with or without economizers and it is recommended that both units be equipped alike.

The MV5000 controller can be configured for alternative (lead/lag/lead/lag) sequence, which is default setting. It can be changed to non-alternating (lead/lead/lag/lag) sequence as required for special applications or user preference.

The MV5000 is equipped with the B alarm board.

Form C dry contact alarm relays are used, offering both NO and NC switching to meet the user's specific alarm protocol and providing complete flexibility to meet any user's requirements. All alarm actuations are individually indicated on the controller front panel.

There is an Ethernet-based remote communication option that can be either factory- or field-installed. See section on Communication Module.

CONTROLLER CERTIFICATIONS

The MV5000 main controller board, alarm board, optional communication module and remote sensors have undergone extensive testing for immunity and emissions. This system is FCC-compliant, in accordance with CE requirements, and meets the following standards:

MV5000 Series
Master Controller

This device complies with FCC Rule Part 15, Subpart B, Class A. Operation is subject to the following two conditions:

1. This device may not cause harmful interference
2. This device must accept any interference received, including that which may cause undesired operation.

This device complies with CE Standards EN55011/ EN50081 and EN55024 for ISM Equipment, Class A.

This ISM device also complies with Canadian ICES – 001.

Bard Manufacturing Company, Inc.
Bryan, OH 43506

Intertek ETL Listed:

- Conforms to UL Standard 916
- Certified to CSA Standard C22.2 No. 205

SPECIFICATIONS/FEATURES FOR MV5000-B SERIES CONTROLLER

- Input power: 18-32 VAC, 60/50Hz, power is supplied from A/C #1 and/or A/C #2
- Isolation circuitry: No line or low voltage phasing required
- Backup power: connection for -24 VDC or -48 VDC (-20 to -56V) maintains microprocessor operation, front panel indication and alarm relay operation during commercial power outages.
- Digital display: 4-character LCD
- Temperature display: F or C
- HVAC outputs: Form A (NO) relays (1A @ 24 VAC)

- Cooling control stages:
  Two for each A/C unit (four total) when configured for economizers
  One for each A/C unit (two total) when configured for no economizers
- Heating Control stages:
  One for each A/C unit, two for each heat pump if so configured
- Dehumidification circuit: Requires optional humidity controller as input signal.
- Operating temperature range: 0 to 120F (-18 to 49C)
- Storage temperature range: -20 to 140F (-29 to 60C)
- Temperature accuracy: +/- 1F from 60-85F (16-30C)
  +/- 1% outside 60-85F
- Lead/lag changeover time: 0 to 30 days
- Timing accuracy: +/- 1%
- Inter-stage time delay: 10 seconds between stages
- Inter-stage differential:
  Stage 1 to 2 - Range 2-6F, default is 4
  Stage 2 to 3 - Range 2-3F, default is 2
  Stage 3 to 4 - Range 2-3F, default is 2
- On-Off differential: 2F (1C) is standard, 4F (3C) when “excessive cycling” mode is enabled.
- Cooling set point range: 65 to 90F (18.3 to 32.2C)
- Comfort setting-Cooling 72F (22C), Heating 68F(20C), for 1 hour.
- Dead band (difference between cooling and heating setpoints): 2F to 40F (1.1C to 22.2C).
- Fire/smoke interface: standard NC circuit jumper, remove for connection to building system control, shuts down both A/C units immediately.
- Memory: EEPROM for set point and changeable parameters (maintains settings on power loss)
- Space temperature sensors: One local is standard, will accept up to two optional 35' remote sensors, Bard Part #8612-023A. When multiple sensors are used, temperatures are averaged.
- Controller Enclosure: 20-gauge pre-painted steel, 9.25"W x 20.875"H x 3.00"D, hinged cover, twenty four (24) .875" diameter electrical knockouts.
- LEDs for basic controller: Lead unit, Cooling stages 1 – 4, Heating Stages 1 – 4, Dehumidification operation.
- Six (6) push-button controls: On/Off switch-Change lead unit-Increase & Decrease set points-Program/ Save-Comfort.

MOUNTING THE CONTROLLER

Included in the controller carton is the controller and installation instructions.

The controller should be installed on a vertical wall approximately 4' above the floor away from drafts and outside doors or windows. Four (4) mounting holes are provided for mounting to the wall and 7/8" holes for conduit connections are provided in both the base, sides and top of the controller.

TEMPERATURE SENSORS

The standard (local) temperature sensor has 12" leads and comes installed from the factory.

A secondary sensor is located internally on the main controller board and serves as a reference and back-up sensor to the local sensor. If the difference between the two sensors is less than the differential setpoint, the local sensor will be used as the controller's temperature point of reference. The differential is adjustable from 12-20°F through "ob5d" in program menu (12°F is the default setting). If the difference between the two sensors is greater than the differential setpoint, the controller will check to determine if the onboard sensor is reading a temperature that is between the SP (setpoint), plus the differential and the SP minus the DB (deadband) minus the differential. If it is, the onboard sensor will become the valid sensor reading and the controller will ignore the local sensor reading. If not, the controller will still use the local sensor reading. This is to add additional levels of operational capability in the rare event the local sensor fails. If the controller is operating in this mode, it is indicated by the lower left decimal point flashing in the display. If this feature is not desired, set the differential set-point to OFF through "ob5d" in program menu. This disables the onboard sensor. This may be necessary if the controller is located in one room and the local sensor has been relocated to a different room.

NOTE: *For purposes of testing, when the local sensor is manually driven higher or lower by applying warm or cool water to the probe, the onboard sensor is inhibited for the first 30 minutes following power up, or when power is cycled off and back on.*

The controller is designed to accept one or two additional sensors. The Bard part number for the optional sensor with 35' leads is 8612-023A. These can be installed as required in the structure to address hot spots, barriers to airflow, etc. If a remote sensor(s) is used, the on-board sensor is disabled. The local sensor remains active.

It is recommended that the sensor lead wires be installed in conduit for protective purposes.

NOTE: *All sensors are polarity sensitive. The copper lead must connect to terminal CU and the silver lead to AG. Sensors are solid state, not RTD. Use only sensors supplied by Bard. Sensor leads can be extended up to 200'. Use 18-gauge twisted pair with soldered connections.*

TEMPERATURE SENSOR LOGIC

The standard local **(LSEn)** sensor monitors the temperature at the controller location. If this is the only sensor connected, it will control the temperature

readout, the space (building) temperature and also be used for Low and High Temperature alarm functions.

If one or more **REMOTE** sensors are installed and connected **(Rem 1 or Rem 2)**, the temperature readout will display and the building will be controlled to an **average** of all connected sensors. If there is more than 10°F difference from the highest to the lowest connected sensor, the actual control will be governed by the hottest sensor for cooling and the coldest sensor for heating.

If alarm boards are utilized, the highest reading of any connected sensor will be used for high temperature alarm and the lowest reading sensor will be used for low temperature alarm. The onboard sensor is ignored if two (2) or more sensors are connected to the Local, Rem 1 or Rem 2 sensor inputs.

BASIC MV5000 CONTROLLER INPUT/OUTPUT SPECIFICATIONS

MV5000 Controller Connections

See Table 1 on page 18 for unit connections.

Located on Main Controller Board

Unit #1
C – 24VAC common
R – 24VAC hot
G – fan (Form A, NO)
Y1 – 1st-stage cool (Form A, NO)
Y2 – 2nd-stage cool (Form A, NO)
W – heat (Form A, NO)

Unit #2
C – 24VAC common
R – 24VAC hot
G – fan (Form A, NO)
Y1 – 1st-stage cool (Form A, NO)
Y2 – 2nd-stage cool (Form A, NO)
W – heat (Form A, NO)

F1-F2 Fire/smoke interface
Shipped with jumper installed*

48VDC Back-up power input
-24VDC or -48VDC
-20V to -56V range

Local Main sensor, 12" leads
CU – copper, AG – silver
Polarity sensitive

Rem 1 Optional remote indoor sensor
CU – copper, AG – silver
Polarity sensitive

Rem 2 Optional remote indoor sensor
CU – copper, AG – silver
Polarity sensitive

H1-H2 Humidity controller input
Requires optional controller
Field installed

Advance Input used to remotely toggle lead/lag change

> ***NOTE:***
> *Sensors are solid state, not RTD.*
> *Use Bard sensors only.*

NOTE: *All alarm and output relays are dry contacts rated 1A @ 24 VAC.*

NOTE: *All alarm relay outputs have 10-second delay before issuing to protect against nuisance alarm signals.*

Located on the MV5000 Relay Board

Unit #1 Terminal Block
A – Compressor Signal from Unit Terminal 1
R – 24VAC hot from Unit Teminal 2
C – 24VAC common from Unit Terminal 3
Y – Compressor Signal to Unit Terminal 4
F – Economizer Shutdown Output Unit to Terminal 5
W – Electric Heat Operation to Unit Terminal 6
Y1 – First Stage Cooling to Unit Terminal 7
Y2 – Second Stage Cooling to Unit Terminal 8
G – Blower Operation to Unit Terminal 9
4 – Dirty Filter Alarm from Unit Terminal 10
5 – Dirty Filter Alarm from Unit Terminal 11
6 – No Connection (Do Not Use)
8 – Economizer Fail from Unit Terminal 12
9 – Economizer Fail from Unit Terminal 13

Unit #2 Terminal Block
A – Compressor Signal from Unit Terminal 1
R – 24VAC hot from Unit Teminal 2
C – 24VAC common from Unit Terminal 3
Y – Compressor Signal to Unit Terminal 4
F – Economizer Shutdown Output Unit to Terminal 5
W – Electric Heat Operation to Unit Terminal 6
Y1 – First Stage Cooling to Unit Terminal 7
Y2 – Second Stage Cooling to Unit Terminal 8
G – Blower Operation to Unit Terminal 9
4 – Dirty Filter Alarm from Unit Terminal 10
5 – Dirty Filter Alarm from Unit Terminal 11
6 – No Connection (Do Not Use)
8 – Economizer Fail from Unit Terminal 12
9 – Economizer Fail from Unit Terminal 13

Gen Run/Econ Shutdown Terminal Block*
Gen Run Input

Economizer Fail Terminal Block
Alarm Output

* These connections require either jumper or Normally Closed (NC) relay contact at the Fire/Smoke and Generator interface for Controller to function.

Alarm relays can be wired for NO (close on alarm) or NC (open on alarm) strategy. Alarm relays can be used individually if there are enough available building alarm points, or can be arranged into smaller groups or even a single group so that all alarm capabilities can be utilized. When multiple alarms are grouped together and issued as a single alarm there will be no off-site indication of which specific problem may have occurred, only that one of the alarms in the group has been triggered. The individual alarm problem will be displayed on the LED display on face of the controller.

SPECIFICATIONS/FEATURES FOR MV5000-B & -BC CONTROLLER ALARM

Inputs

Lockout 1	2, 3 – input from HVAC #1
Lockout 2	2, 3 – input from HVAC #2

These terminals are for use with a dry contact signal from the HVAC unit compressor lockout circuit. APPLY NO VOLTAGE TO THESE TERMINALS. With nothing connected to the Lockout 1 - 2, 3 and Lockout 2 - 2, 3 terminals, a 5 VDC voltage will be present at each set of terminals. This voltage could vary plus or minus 1 volt. This is normal. When the dry contact closes, the voltage will drop to zero.

Outputs

Smoke/Fire	Form C (SPDT)
Lockout 1	Form C (SPDT) Refrigerant alarm HVAC #1
Lockout 2	Form C (SPDT) Refrigerant alarm HVAC #2
Power Loss 1	Form C (SPDT) Power loss HVAC #1
Power Loss 2	Form C (SPDT) Power loss HVAC #2
Low Temp	Form C (SPDT) Low temperature alarm
High Temp 1	Form C (SPDT) High temperature alarm #1
High Temp 2	Form C (SPDT) High temperature alarm #2
Controller	Form C (SPDT) Controller failure alarm*
Econ 1	E, F – Form A (NO)**
Econ 2	E, F – Form A (NO)**
2nd Stage	Form C (SPDT)*** 2nd-stage cooling alarm
2nd Compressor	Form A (NC)
Dirty Filter	Form A (NC) 4, 5 – Input from Unit
Economizer Fail	Form A (NC) 8, 9 – Input from Unit

* Alarm will only activate if main board processor fails or if alarm board to main board cable is damaged.

** Make these connections to terminals E and F in HVAC 1 and 2 respectively if desired to have economizers open for emergency ventilation at High Temp Alarm #2 setpoint condition.

*** For units with 2-stage compressors, 2nd stage cooling alarm activates on cooling Stage 3 initiation.

ALARM LED DISPLAY BOARD

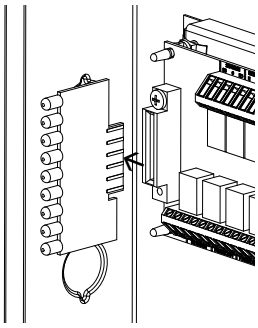

NOTE: *The LED display board is polarized and will only fit in one direction as shown. It must be fully inserted in order for the controller to function properly.*

LOW VOLTAGE FIELD WIRING

The MV5000 is powered from the air conditioners that it is controlling, 24 VAC (18-32V) low voltage only.

Circuitry in the MV5000 isolates the power supplies of the two air conditioners so that no back feeds or phasing problems can occur. Additionally, if one air conditioner loses power, the MV5000 and the other air conditioner are unaffected and will continue to operate normally.

The installer must determine how many functions of the MV5000 are intended to be used before installing the conductors from the MV5000 to the wall mount units. There maybe as few as 4 or as many as 17 per unit.

Connect the low voltage field wiring from each unit per the appropriate low voltage field wiring diagram (see **CONTROLLER WIRING**).

NOTE: *Stranded (18 gauge maximum) control wiring should be used. Using heavier gauge wiring can create excessive stress on the control board as door is opened and closed. Create a wiring loop so the door can open and close without stressing terminal blocks.*

CONTROLLER WIRING

The MV5000 can be used for controlling two air conditioners with or without economizers. It can also be configured for two heat pumps without economizers. Units with economizers will connect differently than units without economizers; therefore, it is important to use the correct connection diagram.

There are older style EIFM economizers and newer style ECONWMT economizers that the MV5000 controller system can work with, and also an option for a remote Ethernet communication board. Therefore, it is important to select the correct low voltage connection diagram (see Table 3 on page 19).

CONTROLLER GROUNDING

A reliable earth ground must be connected in addition to any grounding from conduit. Grounding lugs are supplied for this purpose.

CONTROLLER POWER-UP

Whenever power is first applied to the controller, there is a 20 second time delay prior to any function (other than display) becoming active. This time delay is in effect if the controller On/Off button is used when 24VAC from air conditioners is present, and also if controller is in “ON” position and 24VAC from air conditioners is removed and then restored.

NOTE: *The alarm LED display board is shipped uninstalled to protect it from possible damage during installation of the wiring to main controller board and/or the alarm board. It is polarity sensitive and is keyed so it can only be installed in correct position.*

NOTE: *The LED display board can be replaced if needed independently of the alarm board. Bard part number is 8612-022.*

FIRE SUPPRESSION CIRCUIT

To disable the MV5000 and shut down both air conditioners, terminals F1 and F2 may be used. The F1 and F2 terminals must be jumpered together for normal operation. A normally closed (NC) set of dry contacts may be connected across the terminals and the factory jumper removed for use with a field-installed fire suppression system. The contacts must open if a fire is detected. See appropriate connection diagram (pages 20 – 32) for this connection. Contacts should be rated for pilot duty operation at 2 amp 24VAC minimum. Shielded wire (22 gauge minimum) must be used, and the shield must be grounded to the controller enclosure.

The controller is auto-reset and resumes operation when the fire/smoke detector alarm clears (contacts close).

IMPORTANT NOTE: *Older Bard R-22 models employ an electronic blower control that has a 60-second blower off delay. Current production R-410A models do not use a blower off delay device and the remainder of this paragraph does not apply. to those models In order to have immediate shutdown of the blower motor, in addition to disabling the run function of the air conditioners, it will also require a simple wiring modification at the blower control located in the electrical control panel of the air conditioners being controlled by the lead/lag controller. To eliminate the 60-second blower off delay, disconnect and isolate the wire that is factory connected to the "R" terminal on the electronic blower control, and then connect a jumper from the "G" terminal on the blower control to the "R" terminal on the blower control. The electronic blower control will now function as an on-off relay with no off delay, and the blower motor will stop running immediately when the F1-F2 fire suppression circuit is activated (opened).*

STAGING DELAY PERIODS

The following delays are built in for both cooling & heating:

Stage 1 – 0 seconds for blower (if not already on as continuous)
10 seconds for cooling or heating output

Stage 2 – 10 seconds after Stage 1 for blower
10 additional seconds for cooling or heating output

Stage 3 – 10 seconds after Stage 2

Stage 4 – 10 seconds after Stage 3

NOTE: *For cooling Stages 1 and 2, the stage LED will blink for 10 seconds while the cooling output is delayed after that stage is called for. There is also a delay after the stage is satisfied, and after the LED stops blinking, the stage will turn off. There is a minimum 10-second delay between stages 2 and 3, and 3 and 4, but no delayed output when stage is turned on or off, and LED for those stages will not blink.*

BLOWER OPERATION

The controller can be configured to have main HVAC blowers cycle on and off on demand, have all blowers run continuously or have the lead unit blower run continuously with the lag unit blower cycling on demand. Default setting is the blower on the lead unit operates continuously. There is also an option to have all blowers cycle on if one remote sensor is connected, and a temperature difference of more than 5°F between any two sensors is observed. This helps to redistribute the heat load within the structure and should reduce compressor operating time.

When any of the stages are satisfied, the stage LED will blink for 10 seconds before the stage is actually turned off.

ADVANCE (SWAP) LEAD/LAG UNIT FEATURE

Pressing the Advance button for 1 second will cause the lead and lag units to change positions. This may be useful during service and maintenance procedures. This function can also be done remotely by closing a contact across the Advance terminals on the main board.

ACCELERATE TIMER FEATURE

Pressing the UP arrow button for 5 seconds will activate an accelerate (speed-up) mode, causing the normal changeover time increments of days to be reduced to seconds. Example: 7 days becomes 7 seconds. When "ACC" displays, release button. Whichever LED is on, indicating lead unit will blink over for each second until the controller switches. This is a check for the timer functionality.

REMOTE OVERIDE CODES

If the controller has been remotely locked, unlocked or overriden, the following codes may appear on the display:

System 1 Override Cooling – or C1

System 1 Override Heating – or H1

System 2 Override Cooling – or C2

System 2 Override Heating – or H2

Lock	Locd
Unlock	uLoc

GENERAL PROGRAMMING OVERVIEW

MV5000 Controller Buttons and Functions

On/Off Button

1. Press and release the On/Off button to turn on controller, 4-character display will illuminate and lead unit LED will light.
2. Press and release the On/Off button to turn off controller. Controller will go dark and A/C units will stop.

Comfort Button

1. Press and release the Comfort button to change the cooling setpoint to 72˚F and the heating setpoint to 68˚F for a period of 1 hour.
2. Setpoints will return to the programmed settings automatically after 1 hour.
3. Pressing the Comfort button during the 1 hour period will deactivate the setpoint change.
4. The temperature display will flash the current temperature while in override mode.

Program Button

1. Press the Program button and release it when the message “Prog” appears on the display.
2. Refer to programming instructions and follow these commands to change from default settings.

Advance/Change/Save Button

1. Press and release the Advance button to swap lead and lag unit positions.
2. When in program mode the Down and Up buttons are used to scroll through the programming steps.
3. A flashing display means that the particular function of that programming step is “set” and the display will alternate between the step function and the setting.
4. To change the setting press the Change button and the display will stop flashing, allowing change to the setting.
5. Use Down or Up arrows to change setting as desired, and press the Save button and proceed as desired.
6. When done with programming changes, press the Program button until display stops flashing and room temperature is shown.

Up and Down Buttons

These buttons are used to change the settings in conjunction with the Advance/Change/Save button when in programming mode.

Controller Programmable Features and Default Settings

Order/Display	Description	Range/Choice	Default
LSEn	Temperature at local (main) sensor	—	—
SP	Cooling setpoint temperature	65 to 90°F (18 to 32°C)	79°F (25°C)
db	Dead-band between cooling SP and heating setpoint	2 to 40°F (1 to 24°C)	27°F (15°C)
r1	Temperature at remote sensor 1 location, if connected	—	—
r2	Temperature at remote sensor 2 location, if connected	—	—
cFAn	Continuous blower operation	None, Lead, Both	Lead
deg	Controller system operates in F or C	F or C	F
Alt	Alternating Lead-Lag-Lead-Lag sequence or Non-Alternating Lead-Lead-Lag-Lag sequence – Yes = Alternating	Yes or No	Yes
LLCO	Lead-Lag changeover time (Days)	1 to 30 days, or 0 for disabled	7
HP	Heat pump logic enabled—only for 1-stage heat pumps and forces Lead-Lag sequence (overrides a Non-Alt setting)	Yes or No	No
Cbd5	Unit 1 and 2 blowers automatically both run if delta T >5F between any 2 connected sensors	Yes or No	Yes
OFde	3-minute lead unit and 4-minute lag unit off-delay enabled	Yes or No	No
crun	Minimum 3-minute compressor runtime enabled	Yes or No	No
LoAL	Low temperature alarm setpoint	28 to 65°F (-2 to 18°C)	45°F (7.2°C)
HAL1	High temperature alarm level #1 setpoint	70 to 120°F (21 to 49°C)	90°F (32°C)
HAL2	High temperature alarm level #2 setpoint	70 to 120°F (21 to 49°C)	95°F (35°C)
Locd	Controller is locked and no changes can be made. Consult building authority.	If locked, the display will show Locd if changes attempted	Unlocked
Inter-Stage Differential			
ISd2	From Stage 1 to Stage 2	2, 3, 4, 5 or 6°F	4
ISd3	From Stage 2 to Stage 3	2 or 3°F	2
ISd4	From Stage 3 to Stage 4	2 or 3°F	2
On/Off Differential (Hysterisis)			
CSon	Turn "On" above SP for Stage 1 Cooling	+1 or 2°F	2
CSoF	Turn "Off" below SP for Stage 1 Cooling	-1, 2, 3 or 4°F	-4
	Stage 2, 3 and 4 Cooling automatically set same as Stage 1 decisions		
HSoo	All Heating Stages are equal -/+ on and off differential	-1/+1 or -2/+2	-2/+2
CoPr	1- or 2-stage compressor, if set to 1 the 2nd stage Cooling Alarm activates on Cooling Call 2, if set to 2 the 2nd stage Cooling Alarm activates on Cooling Call 3	1 or 2	1
ob5d	Differential between local and onboard sensor	12 to 20, OFF	12

HUMIDITY CONTROL OPTION

NOTE: *This function is not available if controller is configured for heat pump.*

The standard air conditioning system can be adapted to perform dehumidification control by addition of a simple humidity controller that closes-on-rise, and is connected to terminals H1 and H2 on the main controller board. Recommended Bard Part #8403-038 (H600A 1014). Both HVAC units must be equipped with electric heat for this sequence to work properly. See appropriate connection diagram for this connection:

1. Temperature control always has priority over dehumidification. If there is any stage of cooling demand active, the dehumidification sequence is locked out.
2. If all stages of cooling are satisfied, and relative humidity is above the set point of humidity controller:
   a. The green "Dehumid. Operation" light will come on, and the lag unit compressor and blower will operate until the set point of humidity controller is satisfied (or cancelled by a call for cooling).
   b. If the space temperature drops to 67°F, the electric heater of the lead unit will cycle to help maintain building temperature. It will cycle off at 69°F.
   c. If space temperature drops to 64°F, the Stage 2 Heating light will come on and the lag unit compressor operating for dehumidification mode will cycle off until the building temperature rises above 65°F from 1st stage heat and building load. The green "Dehumid. Operation" light stays on during this sequence, and when Stage 2 Heating light is off, the compressor is on. The electric heater in lag unit is locked out in dehumidification mode.

Lag unit outputs G, Y1 and Y2 are all switched on during dehumidification sequence. This is true for both alternating and non-alternating controller configurations.

⚠ CAUTION

Humidity controller set point should be in 50-60% relative humidity area: Setting controller to lower settings will result in excessive operating time and operating costs for the electric reheat, and in extreme cases could cause evaporator (indoor) coil freeze-up if there are periods of light internal equipment (heat) loading.

COOLING OPERATING SEQUENCES FOR ALTERNATING LEAD/LAG/LEAD/LAG CONFIGURATION (Factory default setting)

1. 1-Stage Compressor Units No Economizer

1st stage cooling setpoint is the setting (SP) input into the controller. Factory default is 79°F (25°C). On a call for cooling, the blower of the lead unit will come on immediately (if not already on – see Blower Operation) and the Stage 1 LED will blink for 10 seconds before going solid, at which time the compressor will start.

2nd cooling setpoint is 4°F (default setting, user selectable 2-6°F) warmer than Stage 1. On a call for 2nd Stage cooling, the blower of the lag unit is turned on (if not already on – see Blower Operation) and the Stage 2 LED will blink for 10 seconds before going solid, at which time the compressor will start.

3rd and 4th stages are functional outputs but there is nothing to be controlled.

2. 2-Stage Compressor Units No Economizer

1st stage cooling setpoint is the setting (SP) input into the controller. Factory default is 79°F (25°C). On a call for cooling, the blower of the lead unit will come on immediately (if not already on – see Blower Operation) and the Stage 1 LED will blink for 10 seconds before going solid, at which time the lead unit compressor will start in compressor Stage 1 partial capacity operation.

2nd cooling setpoint is 4°F (default setting, user selectable 2-6°F) warmer than Stage 1. On a call for 2nd Stage cooling, the blower of the lag unit is turned on (if not already on – see Blower Operation) and the Stage 2 LED will blink for 10 seconds before going solid, at which time the lag unit compressor will start in compressor Stage 1 partial capacity operation.

3rd cooling setpoint is 2°F (default setting, user selectable 2-3°F) warmer than Stage 2. On a call for 3rd Stage cooling, the Stage 3 LED comes on solid (no delay) and the lead unit compressor will switch to compressor Stage 2 full capacity operation.

4th cooling setpoint is 2°F (default setting, user selectable 2-3°F) warmer than Stage 3. On a call for 4th Stage cooling, the Stage 4 LED comes on solid (no delay), and the lag unit compressor will switch to compressor Stage 2 full capacity operation.

3. 1-Stage Compressor Units with Newer ECONWMT Economizers (See Note A)

1st stage cooling setpoint is the setting (SP) input into the controller. Factory default is 79°F (25°C). On a call for cooling, the blower of the lead unit will come on immediately (if not already on – see Blower Operation) and the Stage 1 LED will blink for 10

seconds before going solid, at which time the lead unit Y1 cooling output turns on. If the outdoor temperature and humidity conditions are below the setpoint of the economizer control, the lead unit economizer will operate instead of the compressor. If outdoor conditions are not acceptable for free cooling, the compressor will automatically operate instead of the economizer.

2nd cooling setpoint is 4°F (default setting, user selectable 2-6°F) warmer than Stage 1. On a call for 2nd Stage cooling, the blower of the lag unit is turned on (if not already on – see Blower Operation) and the Stage 2 LED will blink for 10 seconds before going solid, at which time the lag unit Y1 cooling output turns on. If the outdoor temperature and humidity conditions are below the setpoint of the economizer control, the lag unit economizer will operate instead of the compressor. If outdoor conditions are not acceptable for free cooling, the compressor will automatically operate instead of the economizer.

3rd cooling set point is 2°F (default setting, user selectable 2-3°F) warmer than Stage 2. On a call for 3rd Stage cooling, the lead unit economizer will continue to operate as long as outdoor conditions are acceptable and the compressor will operate.

4th cooling set point is 2°F (default setting, user selectable 2-3°F) warmer than Stage 3. On a call for 4th Stage cooling, the lag unit economizer will continue to operate as long as outdoor conditions are acceptable and the compressor will operate.

4. 2-Stage Compressor Units with Newer ECONWMT Economizers (See Note A)

1st stage cooling setpoint is the setting (SP) input into the controller. Factory default is 79°F (25°C). On a call for cooling, the blower of the lead unit will come on immediately (if not already on – see Blower Operation) and the Stage 1 LED will blink for 10 seconds before going solid, at which time the lead unit Y1 cooling output turns on. If the outdoor temperature and humidity conditions are below the setpoint of the economizer control, the lead unit economizer will operate instead of the compressor. If outdoor conditions are not acceptable for free cooling, the compressor will automatically operate on compressor Stage 1 partial capacity instead of the economizer.

2nd cooling setpoint is 4°F (default setting, user selectable 2-6°F) warmer than Stage 1. On a call for 2nd Stage cooling, the blower of the lag unit is turned on (if not already on – see Blower Operation) and the Stage 2 LED will blink for 10 seconds before going solid, at which time the lag unit Y1 cooling output turns on. If the outdoor temperature and humidity conditions are below the setpoint of the economizer control, the lag unit economizer will operate instead of the compressor. If outdoor conditions are not acceptable for free cooling, the compressor will automatically operate on compressor Stage 1 partial capacity instead of the economizer.

3rd cooling setpoint is 2°F (default setting, user selectable 2-3°F) warmer than Stage 2. On a call for 3rd Stage cooling, the lead unit economizer will continue to operate as long as outdoor conditions are acceptable and the compressor will operate on compressor Stage 1 partial capacity. If outdoor conditions are not acceptable for free cooling, the lead unit compressor will automatically be operating on compressor Stage 1 partial capacity and will go to Stage 2 full capacity operation.

4th cooling setpoint is 2°F (default setting, user selectable 2-3°F) warmer than Stage 3. On a call for 4th Stage cooling, the lag unit economizer will continue to operate as long as outdoor conditions are acceptable and the compressor will operate on compressor Stage 1 partial capacity. If outdoor conditions are not acceptable for free cooling, the lag unit compressor will automatically be operating on compressor Stage 1 partial capacity and will go to Stage 2 full capacity operation.

COOLING OPERATING SEQUENCES FOR NON-ALTERNATING LEAD/LEAD/LAG/LAG CONFIGURATION (Not factory default – must be configured for this function)

1. 2-Stage Compressor Units No Economizer

1st stage cooling setpoint is the setting (SP) input into the controller. Factory default is 79°F (25°C). On a call for cooling, the blower of the lead unit will come on immediately (if not already on – see Blower Operation) and the Stage 1 LED will blink for 10 seconds before going solid, at which time the lead unit compressor will start in compressor Stage 1 partial capacity operation.

2nd cooling setpoint is 4°F (default setting, user selectable 2-6°F) warmer than Stage 1, at which time the lead unit compressor will switch to compressor Stage 2 full capacity.

3rd cooling setpoint is 2°F (default setting, user selectable 2-3°F) warmer than Stage 2. On a call for 3rd Stage cooling, the blower of the lag unit will come on immediately (if not already on – see Blower Operation) and Stage 3 LED will blink for 10 seconds before going solid, and then the lag unit compressor will start in compressor Stage 1 partial capacity.

4th cooling setpoint is 2°F (default setting, user selectable 2-3°F) warmer than Stage 3. On a call for 4th Stage cooling, the Stage 4 LED comes on solid (no delay), and the lag unit compressor will switch to compressor Stage 2 full capacity operation.

2. **1-Stage Compressor Units with Newer ECONWMT Economizers (See Note A)**

1st stage cooling setpoint is the setting (SP) input into the controller. Factory default is 77°F (25°C). On a call for cooling, the blower of the lead unit will come on immediately (if not already on – see Blower Operation) and the Stage 1 LED will blink for 10 seconds before going solid, at which time the lead unit Y1 cooling output turns on. If the outdoor temperature and humidity conditions are below the setpoint of the economizer control, the lead unit economizer will operate instead of the compressor. If outdoor conditions are not acceptable for free cooling, the compressor will automatically operate instead of the economizer.

2nd cooling setpoint is 4°F (default setting, user selectable 2-6°F) warmer than Stage 1. On a call for 2nd stage cooling, the lead unit Y2 cooling output turns on. If the outdoor temperature and humidity conditions are below the setpoint of the economizer control, the lead unit economizer will continue to operate and the compressor will operate. If the compressor is already operating on 1st stage cooling because outside free cooling range, no action occurs at 2nd cooling set point.

3rd cooling setpoint is 2°F (default setting, user selectable 2-3°F) warmer than Stage 2. On a call for 3rd Stage cooling, the blower of the lag unit will come on immediately (if not already on – see Blower Operation) and the Stage 3 LED will blink for 10 seconds before going solid, at which time the lag unit Y1 cooling output turns on. The lag unit economizer will operate if the outdoor temperature and humidity conditions are below the setpoint of the economizer control. If outdoor conditions are not acceptable for free cooling, the compressor will automatically operate instead of the economizer.

4th cooling setpoint is 2°F (default setting, user selectable 2-3°F) warmer than Stage 3. On a call for 4th Stage cooling, the lag unit Y2 cooling output turns on activating the lag unit compressor. If the outdoor temperature and humidity conditions are below the setpoint of the economizer control, the lag unit economizer will continue to operate. If the compressor is already operating on 3rd stage cooling because outside free cooling range, no action occurs at 4th cooling setpoint.

3. **2-Stage Compressor Units with Newer ECONWMT Economizers (See Note A)**

1st stage cooling setpoint is the setting (SP) input into the controller. Factory default is 77°F (25°C). On a call for cooling, the blower of the lead unit will come on immediately (if not already on – see Blower Operation) and the Stage 1 LED will blink for 10 seconds before going solid, at which time the lead unit Y1 cooling output turns on. If the outdoor temperature and humidity conditions are below the setpoint of the economizer control, the lead unit economizer will operate instead of the compressor. If outdoor conditions are not acceptable for free cooling, the compressor will automatically operate on compressor Stage 1 partial capacity instead of the economizer.

2nd cooling setpoint is 4°F (default setting, user selectable 2-6°F) warmer than Stage 1. On a call for 2nd stage cooling, the lead unit Y2 cooling output turns on. If the outdoor temperature and humidity conditions are below the setpoint of the economizer control, the lead unit economizer will continue to operate and the compressor will operate on compressor Stage 1 partial capacity. If the compressor is already operating on Stage 1 partial capacity because outside free cooling range, the compressor will switch to compressor Stage 2 full capacity.

3rd cooling setpoint is 2°F (default setting, user selectable 2-3°F) warmer than Stage 2. On a call for 3rd Stage cooling, the blower of the lag unit will come on immediately (if not already on – see Blower Operation) and the Stage 3 LED will blink for 10 seconds before going solid, at which time the lag unit Y1 cooling output turns on. The lag unit economizer will operate if the outdoor temperature and humidity conditions are below the setpoint of the economizer control. If outdoor conditions are not acceptable for free cooling, the compressor will automatically operate on compressor Stage 1 partial capacity instead of the economizer.

4th cooling setpoint is 2°F (default setting, user selectable 2-3°F) warmer than Stage 3. On a call for 4th Stage cooling, the lag unit Y2 cooling output turns on activating the compressor. If the outdoor temperature and humidity conditions are below the setpoint of the economizer control, the lag unit economizer will continue to operate and the compressor will operate on compressor Stage 2 full capacity. If the compressor is already operating on Stage 1 partial capacity because outside free cooling range, the compressor will switch to compressor Stage 2 full capacity.

NOTE A: *Economizers in ECONWMT-Series are available with either "T" temperature only outdoor sensor or "E" enthalpy (temperature and humidity) outdoor sensor. The "T" versions will have a fixed (but selectable) outdoor temperature decision whereas on the "E" versions the outdoor temperature decision will float based on outdoor humidity and the selected Enthalpy curve in the economizer control module.*

HEATING SEQUENCE OF OPERATION

NOTE: *All heating sequences for air conditioners with electric heat or heat pumps will automatically operate in Alternating Lead/Lag/Lead/Lag sequence even if controller is set to Non-Alternating for cooling with or without economizers.*

Air Conditioners with Electric Heat

1st stage heating setpoint is the dead-band (db) below the 1st stage cooling setpoint (the SP entered into the program). The dead-band is adjustable from 2-40°F, and factory default is 27°F.

2nd stage heating setpoint will operate at same inter-stage differential as set for cooling mode.

SPECIFICATIONS FOR OPTIONAL REMOTE COMMUNICATION BOARD

CB5000 Communication Board

NOTE: *If the communication board (Bard part number CB5000) was not originally factory installed, it can be field installed at anytime. It allows remote access via Ethernet, depending upon level of authority assigned, to all functions of the controller system the same as if one was in the building where the controller system is physically installed.*

Required input connections to the CB5000 (these are all internal connections from either the alarm board or main controller board):

1. Fire/smoke connection from MV5000 main controller board.
2. Refrigerant lockout inputs.
3. If economizers are used, an additional 24V signal wire is required from each air conditioner to the controller system.
4. Communication cable from CB5000 plugs into the Ethernet connection on main MV5000 controller board.

Operating System

No special software is required to access the system. The CB5000 has a default address, simply follow these instructions.

CB5000 COMMUNICATION BOARD

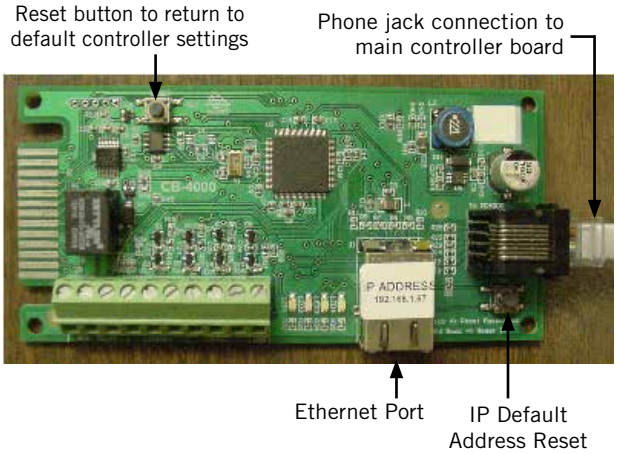

To Access the System

1. Connect CAT 5 or CAT 6 Ethernet cable from computer to Ethernet port on the CB5000.
2. Change the computer's IP address as shown below to gain initial access to the CB5000.

NOTE 1: *Record the computer's current IP settings BEFORE making any changes. Reset back to these original settings once an IP address to the CB5000 has been assigned.*

For XP or Windows 2000:

1. Open Control Panel, double click Network Connections.
2. Double click Local Area Connection on the General tab and select Properties.
3. Using the General tab, scroll to Internet Protocol (TCP/IP).
4. Highlight Internet Protocol (TCP/IP) and select Properties.
5. Change the addresses as follows:

IP address:	192.168.1.50
Subnet mask:	255.255.255.0
Default gateway:	192.168.1.1
Preferred DNS server:	192.168.1.10
Alternate DNS server:	192.168.1.11

6. Click OK and close all windows.
7. Start the browser, enter the CB5000's default IP address **192.168.1.67** and hit Enter.
8. The MV5000 log in page should appear.

For Vista or Windows 7:

1. Open Control Panel, click Network & Internet.
2. Click Network & Sharing Center.
3. Click Local Area Network link.
4. Click Properties.
5. Highlight Internet Protocol Version 4 (TCP/IPV4) and select Properties.
6. Change the addresses as follows:

IP address:	192.168.1.50
Subnet mask:	255.255.255.0
Default gateway:	192.168.1.1
Preferred DNS server:	192.168.1.10
Alternate DNS server:	192.168.1.11

7. Click OK and close all windows.
8. Start the browser, enter the CB5000's default IP address **192.168.1.67** and hit Enter.
9. The MV5000 log in page should appear.

Log In Page

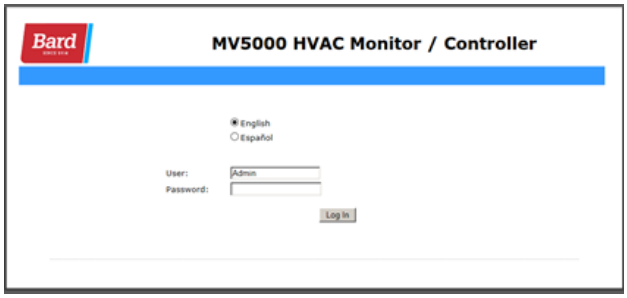

1. Type “Admin” for user name and “Bard” for password. These are case sensitive. Hit “Log In”. The System Status Page will appear.

System Status Page

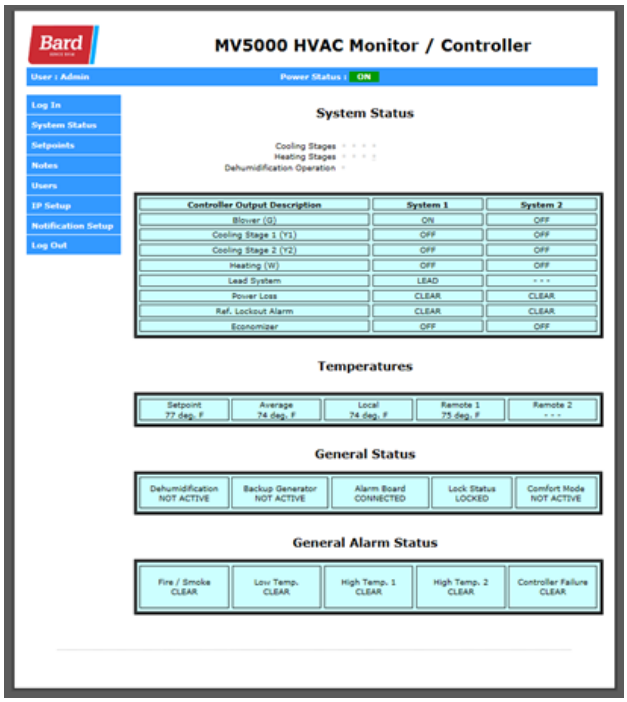

The System Status Page shows:

1. The overall HVAC status of:
   a. Active cooling or heating stages or dehumidification mode (requires humidity sensor)
   b. Active controller outputs (blower, cooling Stage 1 or 2, heating) to each air conditioner
   c. Which unit is the Lead unit
   d. Power loss or refrigerant lockout for each air conditioner
   e. If economizers are used if on or off (**NOTE:** older style EIFM economizers require a simple relay kit for this feature to work, Bard Part Number 8620-221)
2. General status of:
   a. Dehumidification Active or not
   b. Backup Generator Active or not (if tied to generator run controls to inhibit lag unit operation during generator run)
   c. Alarm board connected or not
   d. Controller system Locked or Unlocked
   e. Comfort mode Active or not
3. Temperatures:
   a. Average temperature (if more than one sensor used, if not will read same as Local sensor)
   b. Local sensor at controller
   c. Remote 1 or Remote 2 if connected
4. General Alarm Status:
   a. Fire/Smoke, Clear or Alarm
   b. Low Temp, Clear or Alarm
   c. High Temp #1, Clear or Alarm
   d. High Temp #2, Clear or Alarm
   e. Controller Failure, Clear or Alarm

Click the “IP Setup” button on the left side of the page.

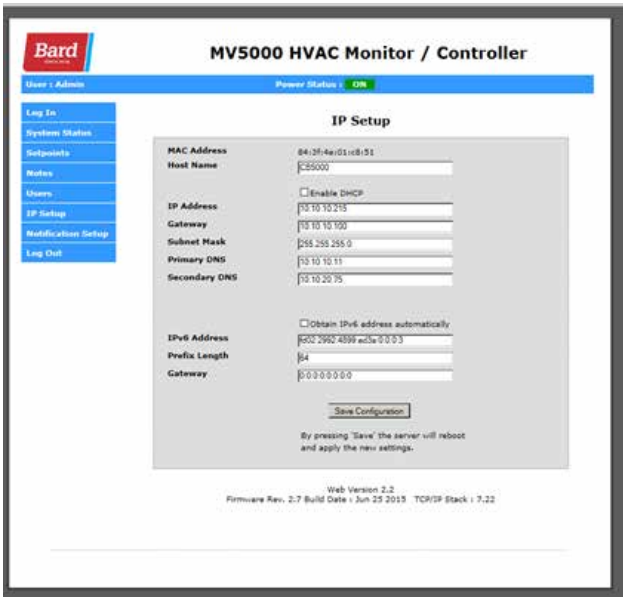

NOTE: *If the remote user is on a different subnet than the CB5000, it is recommended that Static IP Addressing be used rather than DHCP.*

If Network Uses Static IP Addressing

1. Enter the correct address information provided by the IT department and click the "Save Config" button.
2. The assumption is that the new IP address has already been configured into the network to get through any firewall(s).
3. Disconnect the Ethernet cable from the computer and plug into the router.
4. Change the computer system's IP address back to their previous settings recorded in ***NOTE 1***.
5. Type the new IP address into the browser and make any changes to the MV5000 system before logging out.

If Network Uses DHCP

1. Check the "Enable DHCP" box.
2. Click "Save Config" box. It will take several seconds before receiving a message that it is now offline. A this point the unit is now running in DHCP mode.
3. Change the computer system's IP address back to their previous settings from ***NOTE 1***.
4. Type CB5000 in the browser's URL address bar to access the CB5000.

NOTE 2: *To get back to the CB5000 default IP setting, simply hold the reset button next to the Ethernet jack for 5+ seconds, then release.*

Connect to Network

1. After initial set up using laptop computer, disconnect computer cable from the Ethernet port and connect the CAT 5 or CAT 6 network cable.
2. Remote access is now available using the assigned IP address and valid user name and password (case sensitive).

Setpoints Page

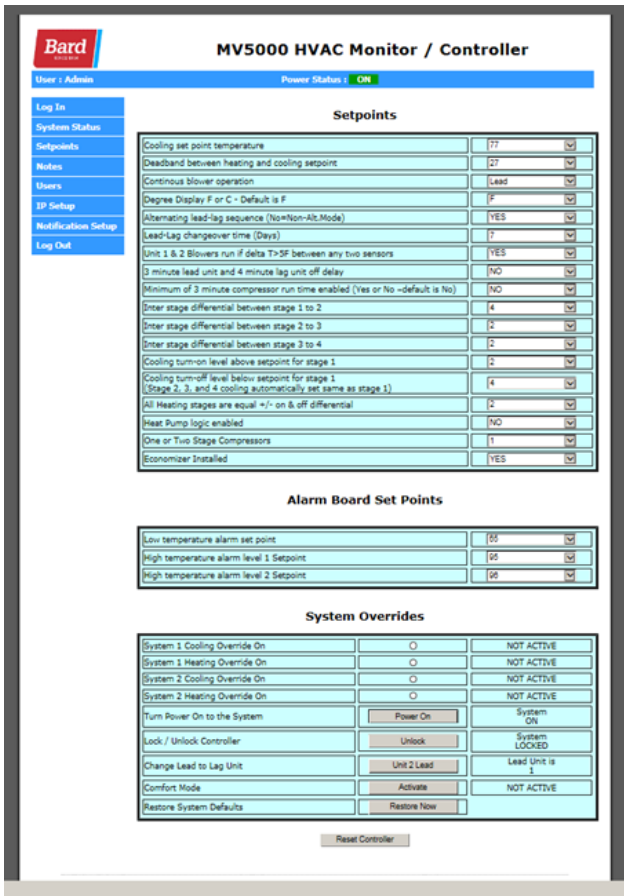

NOTE: *"Read" level authority can view this screen but cannot make any changes. "Admin" and "Write" authority can make changes.*

1. General Setpoints
   a. On initial installation and start up, all selectable characteristics are set to factory default settings.
   b. Each of these points has a drop-down menu forease of use.
2. Alarm Board Setpoints
   a. Low temperature alarm setpoint
   b. High temperature alarm #1 setpoint
   c. High temperature alarm #2 setpoint
3. System Overrides
   a. System 1 Cooling Override
   b. System 1 Heating Override
   c. System 2 Cooling Override
   d. System 2 Heating Override
   e. Turn Power On to the System (*NOTE: Cannot remotely turn the controller system Off*)
   f. Lock/Unlock Controller
   g. Advance Lead to Lag Unit

h. Comfort Mode

i. Restore System Defaults

j. Reset Controller. There are built-in routines to prevent the controller system from getting "locked up", but this also allows a manual remote reset as a backup before having a service call to the site.

Notes Page

This screen provides a place to leave notes about the site for the technician or engineer.

Users Page

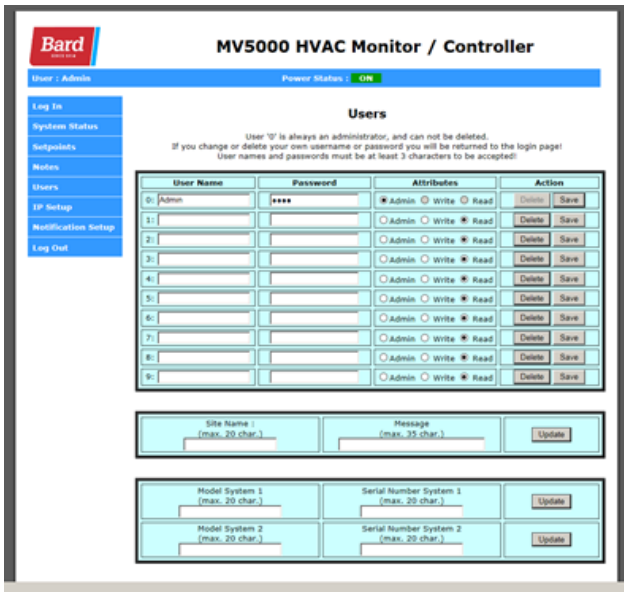

1. The designated Admin person can assign up to nine additional users and set up as Admin, Write or Read authority.
2. User name and password must be assigned. Each must be at least three characters long and are case sensitive.
3. Only "Admin" can add, change or delete users and has access to all controller pages.
4. "Write" can make changes to the controller settings and operating characteristics and has access to only Log In, System Status, Setpoints and Log Out pages.
5. "Read" can only view Status and Setpoints pages and cannot make any changes.

Notification Setup Page

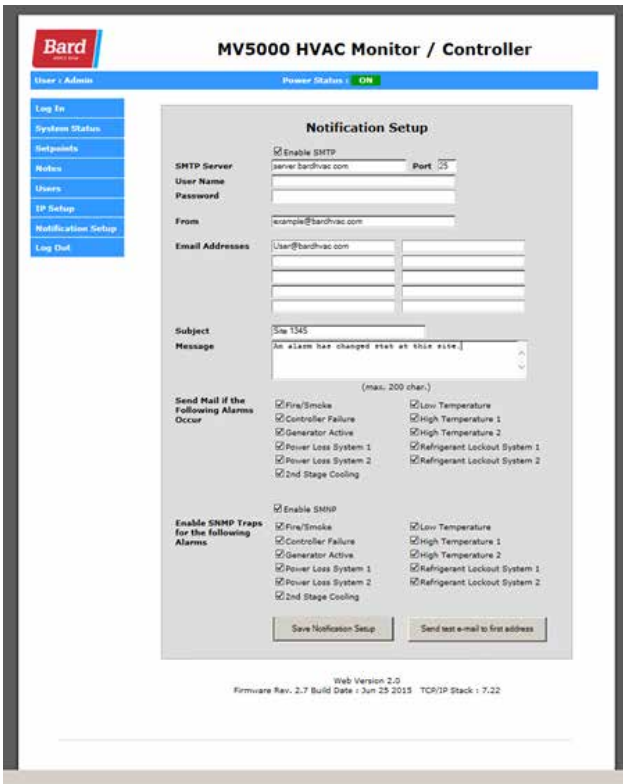

The notification setup page is used to determine which alarms are remotely communicated to the offsite monitoring systems. The CB5000 supports email notifications as well as IPV4 and IPV6 SNMP Ver. 2 traps.

Remote SMTP server information and a valid email address are required.

SNMP traps may be sent to up to four IP addresses to both IPV4 and IPV6 addresses. The addresses are configured remotely by the IT profesionals monitoring these traps. The IP addresses are configured in the MIB file using a standard MIB browser. Each of the traps must be enabled and a valid IP address saved in the MIB file. MIB files are available on the Bard website at http://bardhvac.com/software-download.

Log Out Button

1. Clicking this button will automatically log off the controller remote access.
2. To log back in will require entering assigned IP address into your browser and entering valid User Name and Password.

SECURITY (LOCKING) FEATURE

The MV5000 controller can be locked such that unauthorized persons cannot make any changes to temperature setpoints or any other selectable parameters of the controller system.

The ON/OFF and Comfort buttons remain fully active for their normal intent. The Advance/Change/Save button remains active for the Advance feature only, which allows the position of the lead and lag air conditioners to be swapped (reversed). The Program button remains partially active, allowing the review of temperature sensor(s) actual reading of temperature and the current settings/choices that have been chosen. However, no changes can be made when the controller is locked and if the change button is pressed when in the Program mode, the display will come up showing "Locd" instead of flashing the selectable choices for that parameter. The default (DEF) reset capability is also disabled when the controller is in locked mode.

Locking and unlocking the MV5000 controller:

1. Locking the controller requires using three buttons while the controller is in the normal operating (run) mode.
2. Press and hold the Advance/Change/Save button and the Up and Down arrow buttons simultaneously for 20 seconds until the display shows "Locd".
3. To unlock the controller, press the Change, Up and Down arrow buttons simultaneously for 20 seconds until the display reads "uLoc".

GENERATOR RUN/ECONOMIZER SHUTDOWN FEATURE

If desired, the MV5000 controller can be signaled from a standby generator system to lockout (disable operation of the) lag air conditioning system and close economizers if active. This is sometimes mandated if the generator size is not sufficient to handle the building load (amperage) and that of both air conditioning systems.

A normally closed (NC) dry contact as part of generator controls is required. These contacts must open when the generator is started, and such action will signal the MV5000 controller to this condition and disable lag air conditioner run function and close economizers if active.

A wire jumper (J5) is factory installed across the Generator Run/Economizer Shutdown terminals. To utilize the generator run feature, remove the jumper from Generator Run/Economizer Shutdown and connect the generator normally closed (NC) contacts that will open-on-run generator condition to the Generator Run/ Economizer Shutdown terminals.

BACKUP DC POWER CONNECTION

There are input connections available for -24VDC or -48VDC (-20 to -56V) backup power connection. Making this connection will maintain microprocessor operation, front panel display, LED signaling and alarm relay operation during periods of commercial power outages and when no standby generator is available. This circuit is protected by a .5A (500mA) fuse which is located between the Unit 2 terminal block and the GEN RUN terminals.

IMPORTANT: *The shelter DC battery power must be connected to the controller and wired as shown in controller wiring diagrams.*

The backup DC power connection is polarity sensitive. If polarity is reversed, the controller will not function on backup power and no display and alarm functions will be evident.

TABLE 1
Unit Low Voltage Terminal Connection Chart – MV Series Controller

Terminal	Description	MV Terminal Connection	Revision "2" Reference*
1	Compressor on Output Signal from Jade to MV	"A" on Relay Board	"A"
2	**24VAC HOT** from Terminal 2 Connected to Unit Transformer to MV	"R" on Relay Board	"R"
3	**24VAC COMMON** from Unit Transformer to MV	"C" on Relay Board	"C"
4	Unit Compressor Operation, Unit Receives Signal from MV for Compressor/ Condenser Fan On	"Y" on Relay Board	"Y"
5	Close Damper Input (Close Blade 100%), Unit Receives Signal from MV	"F" on Relay Board	"F"
6	Electric Heat On Operation, Stage 1 and 2, Unit Receives Signal from MV	"W" on Relay Board	"W1"
7	1st Stage Cooling Input, 1st Stage Cooling Signal to Jade from MV	"Y1" on Relay Board	"Y1"
8	2nd Stage Cooling Input, 2nd Stage Cooling Signal to Jade from MV	"Y2" on Relay Board	"Y2"
9	Blower Operation (Indoor Blower On), Unit Receives Signal from MV	"G" on Relay Board	"G"
10	Filter Switch Normally Closed Dry Contacts, MV Signals Dirty Filter Alarm	"4" on Relay Board	"4"
11	Filter Switch Normally Closed Dry Contacts, MV Signals Dirty Filter Alarm	"5" on Relay Board	"5"
12	Blade Switch Delay Relay Normally Closed Dry Contacts, MV Signals Blade Switch Fail Alarm*	"8" on Relay Board	"8"
13	Blade Switch Delay Relay Normally Closed Dry Contacts, MV Signals Blade Switch Fail Alarm*	"9" on Relay Board	"9"
14	Occupied Signal Input, Econ Emergency Open (Open Blade 100%), Unit Receives Signal from MV	"ECONE" on Alarm Board	"E"
15	Econ Open Output (**6V HOT, 24V HOT** after Blade Open 100% and Delay), Sends Signal to MV	"DAMPER" on Comm Board	"10"
16	Alarm Relay Common Dry Contact, MV Signals Compressor Fail Alarm	"LOCKOUT 3" on Alarm Board	"3"
17	Alarm Relay Normally Open Dry Contact, MV Signals Compressor Fail Alarm	"LOCKOUT 2" on Alarm Board	"2"
18	Alarm Relay Normally Closed Dry Contact	*Not Used on MV*	"1"
19	**24VAC HOT** to Terminal 2 from Unit Transformer Through Smoke Alarm Jumper Wire**	Building Smoke Alarm (optional)	"RT"
20	2nd Stage Heating On Operated Through Jumper to Terminal 6	*Not Used on MV*	"W2'
21	Blade Switch Terminal **24V HOT** When Blade is Open, Sends Signal from Switch to Delay Relay	*Not Used on MV*	"7"

* Blade switch delay relay fail alarm set to 500 second delay from factory.
** Replace jumper wire with smoke alarm connections to interrupt 24VAC unit power if smoke alarm is used in shelter. Jumper (J7, J8) can also be removed to break 24VAC power to unit.

TABLE 2
MV Relay Board Jumpers J1 – J4

	J1	J2	J3	J4	Simultaneous Unit 1 and 2 Operation	Alarm Unit Compressor Locks Out	Compressor Alarm Unit Light Locks In on MV	Vent and Blower Operational in Alarm Unit
Option 1 (Default)	ON	ON	ON	ON	YES	NO	NO	YES
Option 2	OFF	OFF	ON	ON	NO	YES	YES	YES
Option 3	OFF	OFF	OFF	OFF	NO	NO	NO	YES

TABLE 3
Connection Diagram Selection

Figure Number	Number of Cooling Stages	Air Conditioner Model Number	Unit Revision	A/C Unit Build Date	Description
1	1 or 2	H**A/H**L HA*S/HL*S	4	After May 2015	Economizers: YES Alarms: YES Communication Board: YES
2	1 or 2	H**A/H**L HA*S/HL*S	4	After May 2015	Economizers: YES Alarms: YES Communication Board: NO
3	1	H**A/H**L	4	After May 2015	Economizers: NO Alarms: YES Communication Board: NO
4	1	H**A/H**L	4	After May 2015	Economizers: NO Alarms: NO Communication Board: NO
5	2	HA*S/HL*S	4	After May 2015	Economizers: NO Alarms: YES Communication Board: NO
6	2	HA*S/HL*S	4	After May 2015	Economizers: NO Alarms: NO Communication Board: NO
7	1	W**A/W**L	NA	NA	Economizers: YES Alarms: YES Communication Board: YES
8	1	H**A/H**L	2	Before May 2015	Economizers: NO Alarms: YES Communication Board: NO
9	2	HA*S/HL*S	2	Before May 2015	Economizers: NO Alarms: YES Communication Board: NO
10	1	H**A/H**L	2	Before May 2015	Economizers: NO Alarms: YES Communication Board: YES
11	2	HA*S/HL*S	2	Before May 2015	Economizers: NO Alarms: YES Communication Board: YES
12	1	H**A/H**L	2	Before May 2015	Economizers: YES Alarms: YES Communication Board: NO
13	1	H**A/H**L	2	Before May 2015	Economizers: YES Alarms: YES Communication Board: YES

FIGURE 1
MV5000-BC Controller With Alarm Board and Communication Board
1-or 2-Stage (HA/H**L Series or HA*S/HL*S Series) Air Conditioners with Economizers**

Use this diagram when connecting the MV Series controller with communication board (-BC) to two (2) H Series 1- or 2-stage units with the economizer vent option. All alarm functionality is present when wired per Figure 1.

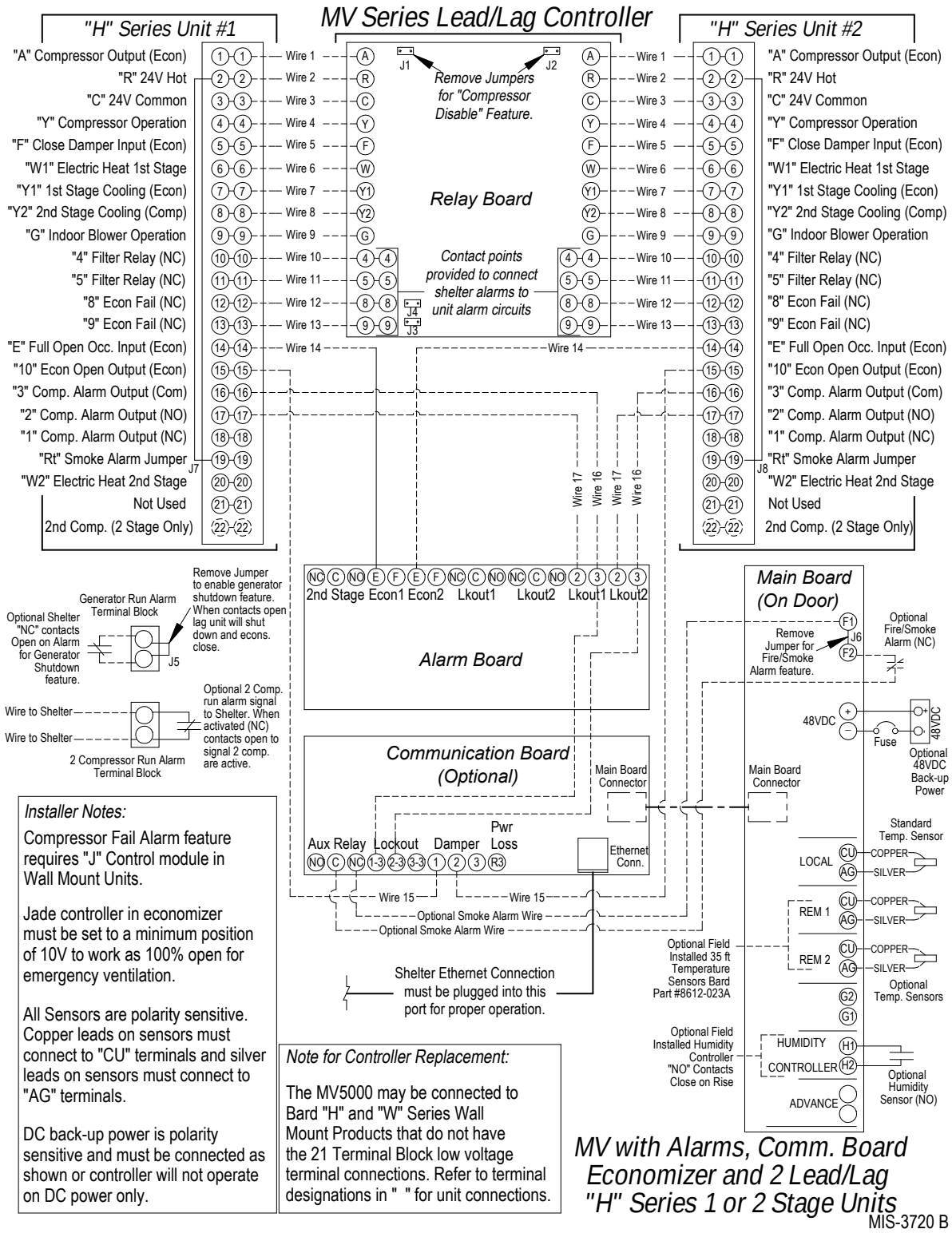

FIGURE 2
MV5000-B Controller With Alarm Board
1-or 2-Stage (HA/H**L Series or HA*S/HL*S Series) Air Conditioners with Economizers**

Use this diagram when connecting the MV Series controller without communication board (-BC) to two (2) H Series 1- or 2-stage units with the economizer vent option. All alarm functionality is present when wired per Figure 2.

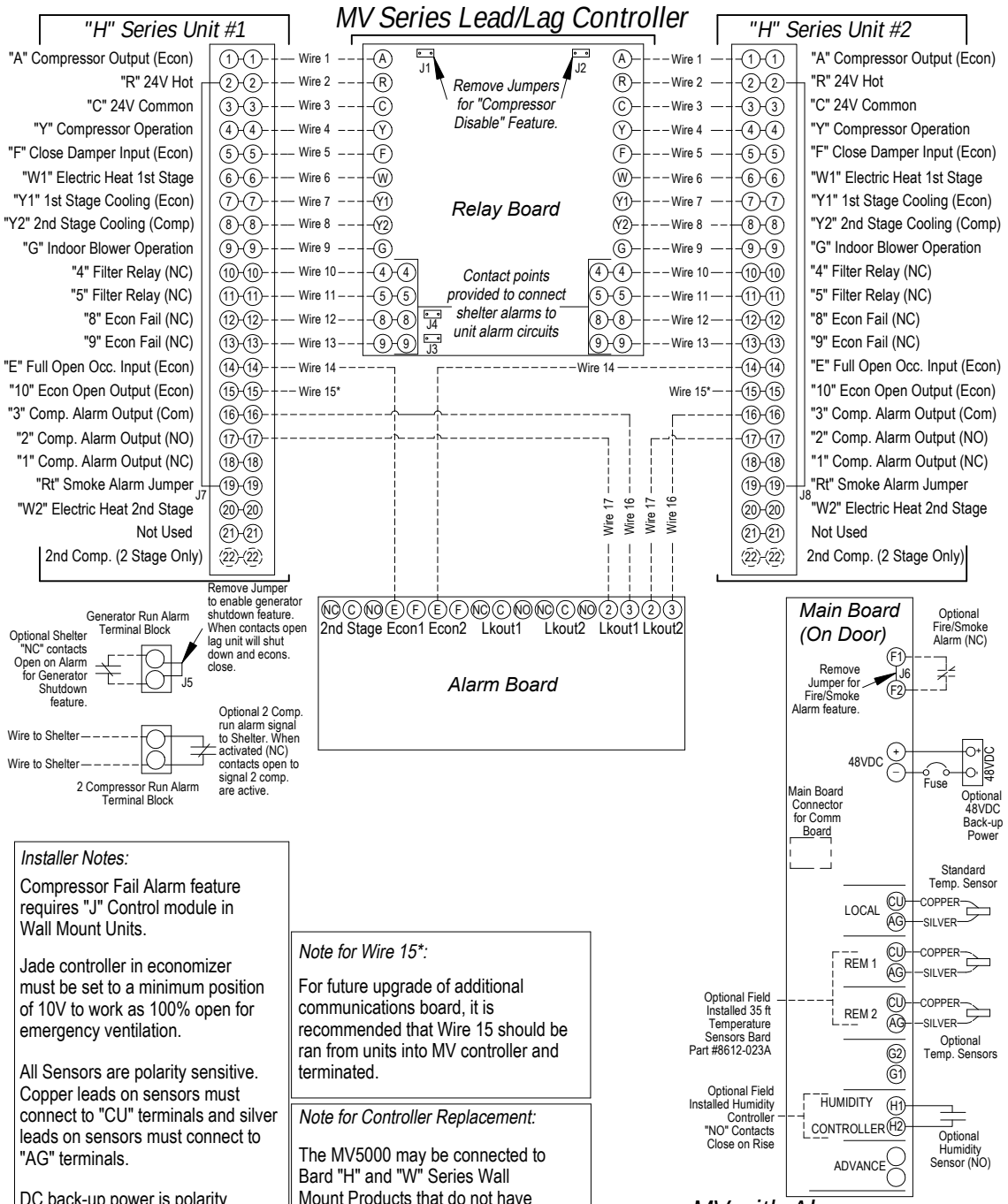

Installer Notes:

Compressor Fail Alarm feature requires "J" Control module in Wall Mount Units.

Jade controller in economizer must be set to a minimum position of 10V to work as 100% open for emergency ventilation.

All Sensors are polarity sensitive. Copper leads on sensors must connect to "CU" terminals and silver leads on sensors must connect to "AG" terminals.

DC back-up power is polarity sensitive and must be connected as shown or controller will not operate on DC power only.

Note for Wire 15:*

For future upgrade of additional communications board, it is recommended that Wire 15 should be ran from units into MV controller and terminated.

Note for Controller Replacement:

The MV5000 may be connected to Bard "H" and "W" Series Wall Mount Products that do not have the 21 Terminal Block low voltage terminal connections. Refer to terminal designations in " " for unit connections.

MV with Alarms Economizer and 2 Lead/Lag "H" Series 1 or 2 Stage Units

MIS-3721 B

FIGURE 3
MV5000-B Controller With Alarm Board
1-Stage (HA/H**L Series) Air Conditioners**

Use this diagram when connecting the MV Series controller to two (2) H Series 1-stage units without the economizer vent option. Compressor and filter alarm functionality is present when wired per Figure 3.

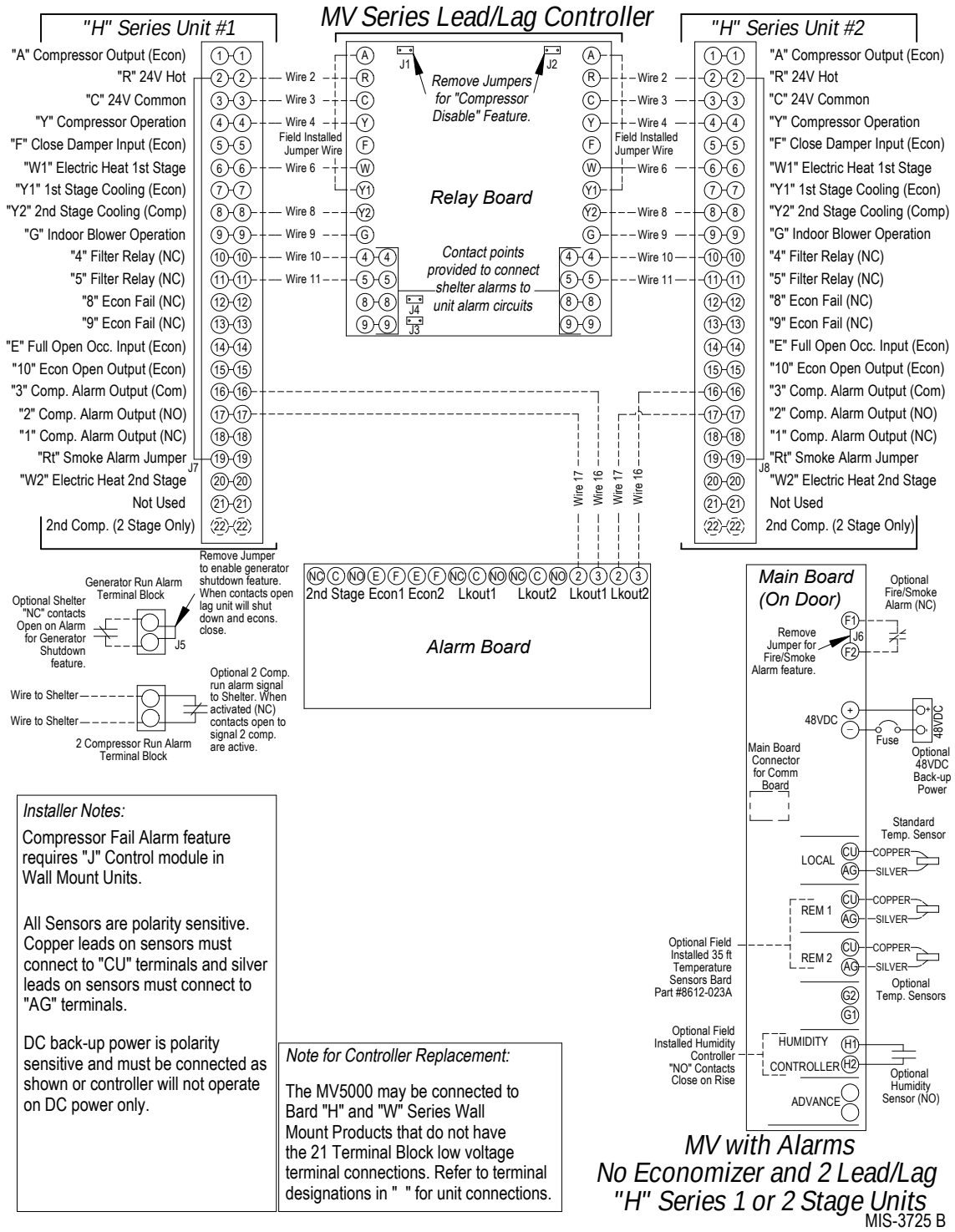

Installer Notes:

Compressor Fail Alarm feature requires "J" Control module in Wall Mount Units.

All Sensors are polarity sensitive. Copper leads on sensors must connect to "CU" terminals and silver leads on sensors must connect to "AG" terminals.

DC back-up power is polarity sensitive and must be connected as shown or controller will not operate on DC power only.

Note for Controller Replacement:

The MV5000 may be connected to Bard "H" and "W" Series Wall Mount Products that do not have the 21 Terminal Block low voltage terminal connections. Refer to terminal designations in " " for unit connections.

MV with Alarms
No Economizer and 2 Lead/Lag
"H" Series 1 or 2 Stage Units

MIS-3725 B

FIGURE 4
MV5000 Controller
1-Stage (HA/H**L Series) Air Conditioners**

Use this diagram when connecting the MV Series controller to two (2) H Series 1-stage units without economizers, alarms or communication board. Alarm functionality may be wired directly to the shelter.

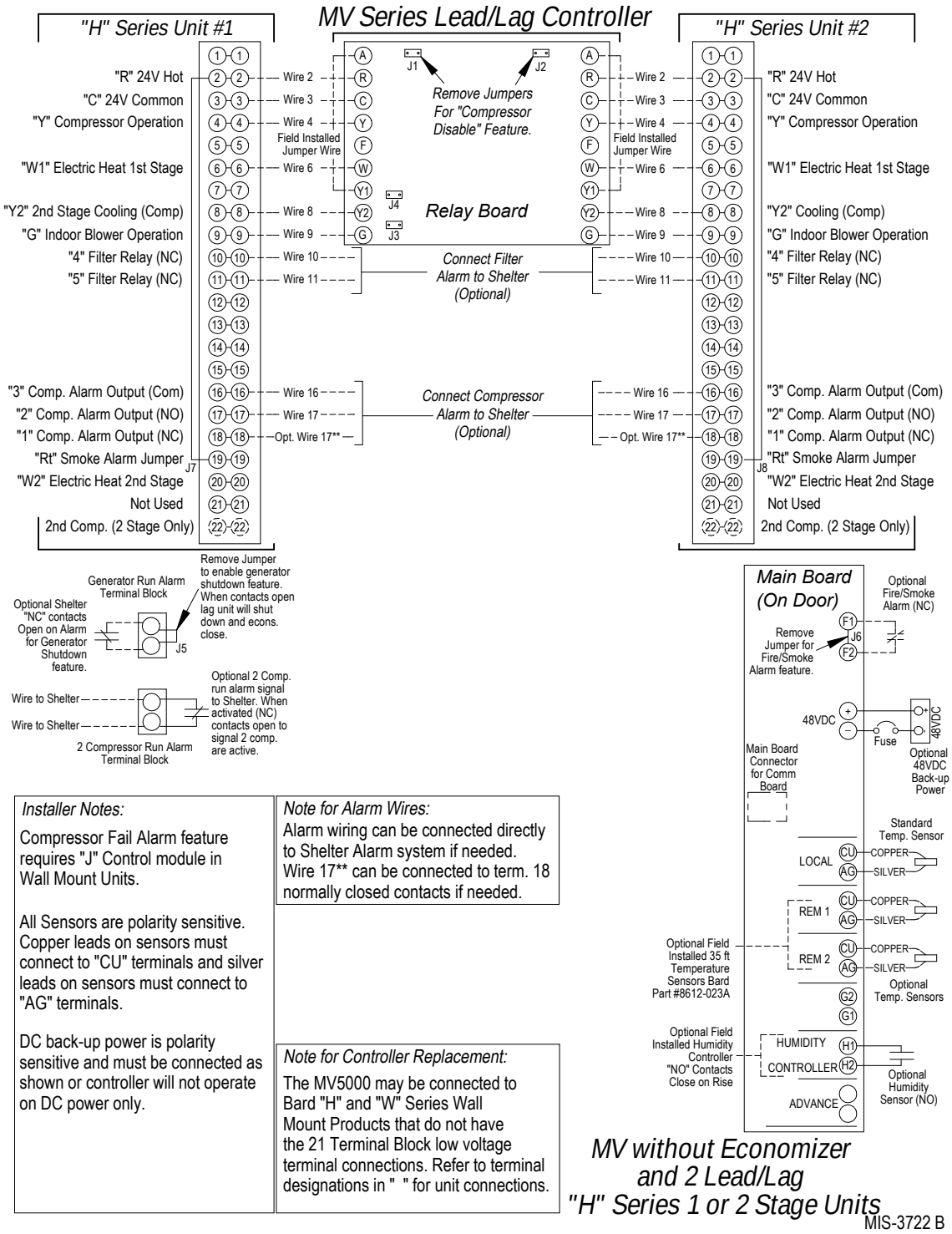

Installer Notes:

Compressor Fail Alarm feature requires "J" Control module in Wall Mount Units.

All Sensors are polarity sensitive. Copper leads on sensors must connect to "CU" terminals and silver leads on sensors must connect to "AG" terminals.

DC back-up power is polarity sensitive and must be connected as shown or controller will not operate on DC power only.

Note for Alarm Wires:
Alarm wiring can be connected directly to Shelter Alarm system if needed. Wire 17** can be connected to term. 18 normally closed contacts if needed.

Note for Controller Replacement:
The MV5000 may be connected to Bard "H" and "W" Series Wall Mount Products that do not have the 21 Terminal Block low voltage terminal connections. Refer to terminal designations in " " for unit connections.

MV without Economizer and 2 Lead/Lag "H" Series 1 or 2 Stage Units

MIS-3722 B

FIGURE 5
MV5000-B Controller With Alarm Board
2-Stage (HA*S/HL*S Series) Air Conditioners

Use this diagram when connecting the MV Series controller to two (2) H Series 2-stage units without the economizer vent option. Compressor and filter alarm functionality is present when wired per Figure 5.

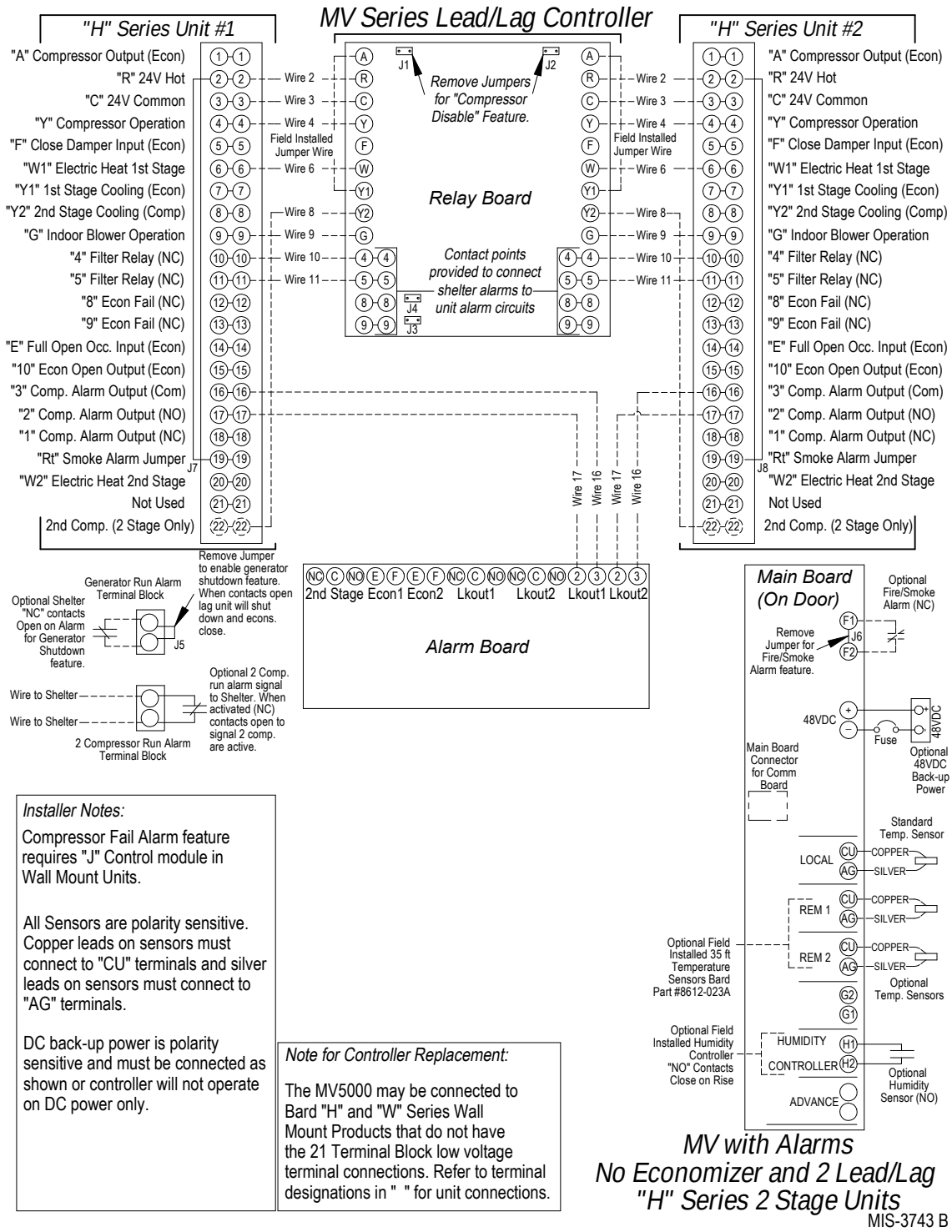

Installer Notes:

Compressor Fail Alarm feature requires "J" Control module in Wall Mount Units.

All Sensors are polarity sensitive. Copper leads on sensors must connect to "CU" terminals and silver leads on sensors must connect to "AG" terminals.

DC back-up power is polarity sensitive and must be connected as shown or controller will not operate on DC power only.

Note for Controller Replacement:

The MV5000 may be connected to Bard "H" and "W" Series Wall Mount Products that do not have the 21 Terminal Block low voltage terminal connections. Refer to terminal designations in " " for unit connections.

MV with Alarms
No Economizer and 2 Lead/Lag
"H" Series 2 Stage Units

FIGURE 6
MV5000 Controller
2-Stage (HA*S/HL*S Series) Air Conditioners

Use this diagram when connecting the MV Series controller to two (2) H Series 2-stage units without economizers, alarms or communication board. Alarm functionality may be wired directly to the shelter.

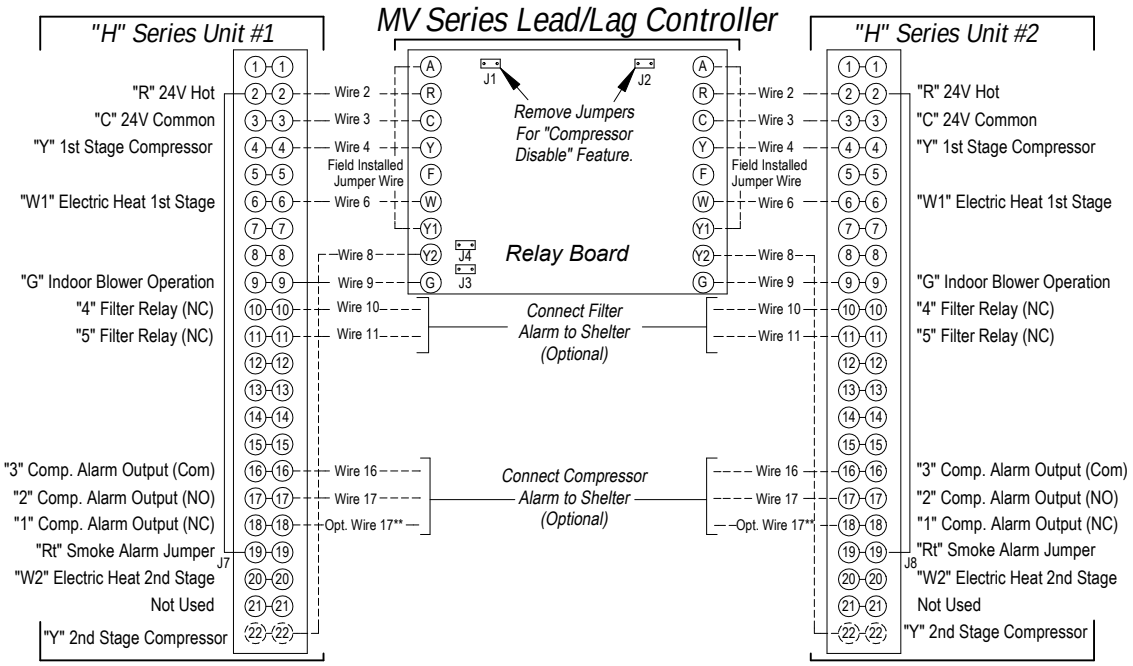

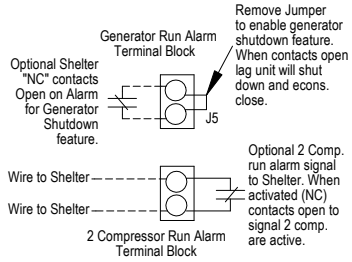

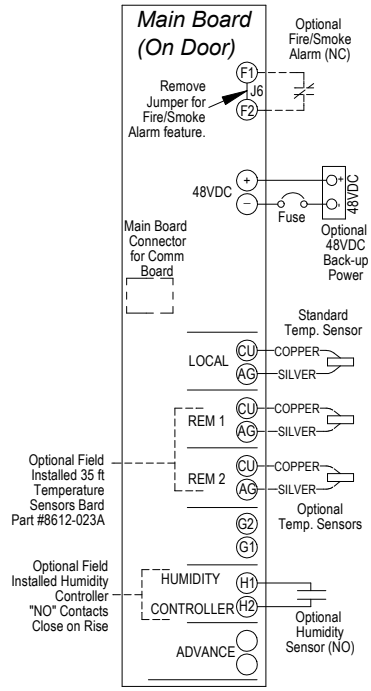

Installer Notes:

Compressor Fail Alarm feature requires "J" Control module in Wall Mount Units.

All Sensors are polarity sensitive. Copper leads on sensors must connect to "CU" terminals and silver leads on sensors must connect to "AG" terminals.

DC back-up power is polarity sensitive and must be connected as shown or controller will not operate on DC power only.

Note for Alarm Wires:
Alarm wiring can be connected directly to Shelter Alarm system if needed. Wire 17** can be connected to term. 18 normally closed contacts if needed.

Note for Controller Replacement:
The MV5000 may be connected to Bard "H" and "W" Series Wall Mount Products that do not have the 21 Terminal Block low voltage terminal connections. Refer to terminal designations in " " for unit connections.

MV without Economizer and 2 Lead/Lag "H" Series 2 Stage Units

MIS-3740 B

FIGURE 7
MV5000-BC Controller WIth Alarm Board and Communication Board
1-Stage (WA/W**L Series) Air Conditioners with Economizers**

Use this diagram when connecting the MV Series controller with communication board (-BC) to two (2) W Series 1-stage units with the economizer vent option. Filter alarm functionality is only available with "J" control module option.

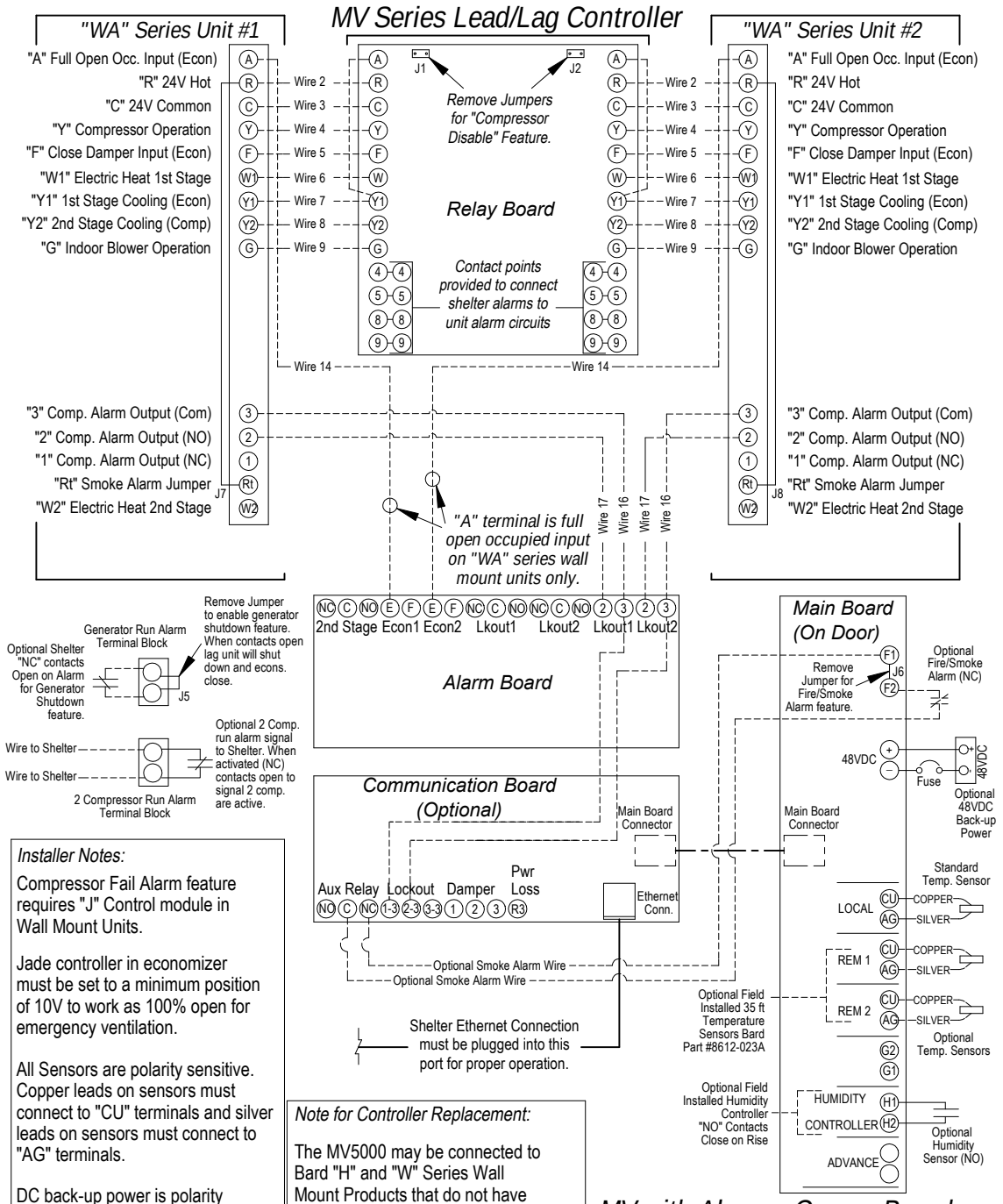

FIGURE 8
MV5000-B Controller With Alarm Board
1-Stage (HA/H**L Series) Air Conditioners, Revision 2 Units Only (Built Before 5/15)**

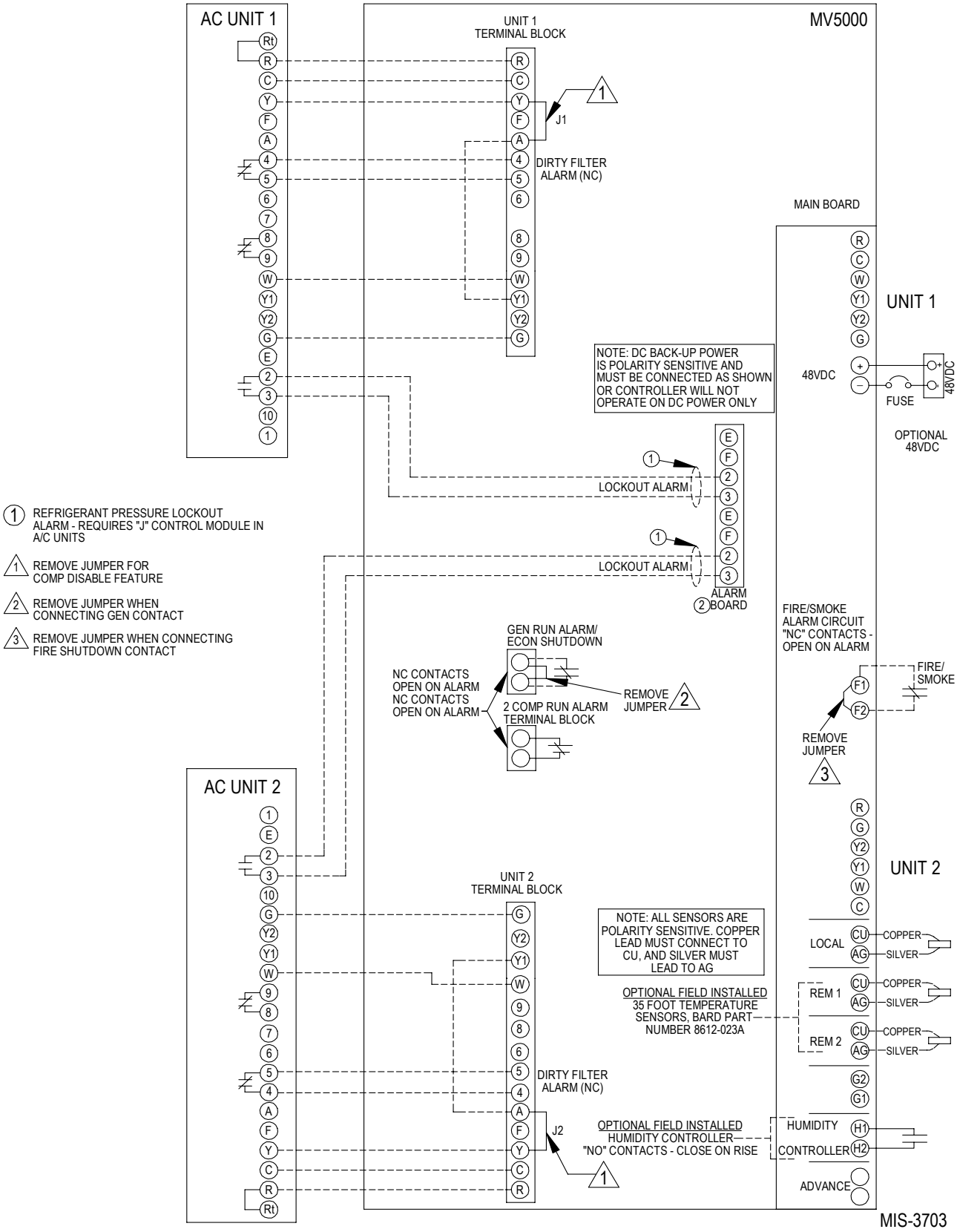

FIGURE 9
MV5000-B Controller With Alarm Board
2-Stage (HA*S/HL*S Series) Air Conditioners, Revision 2 Units Only (Built Before 5/15)

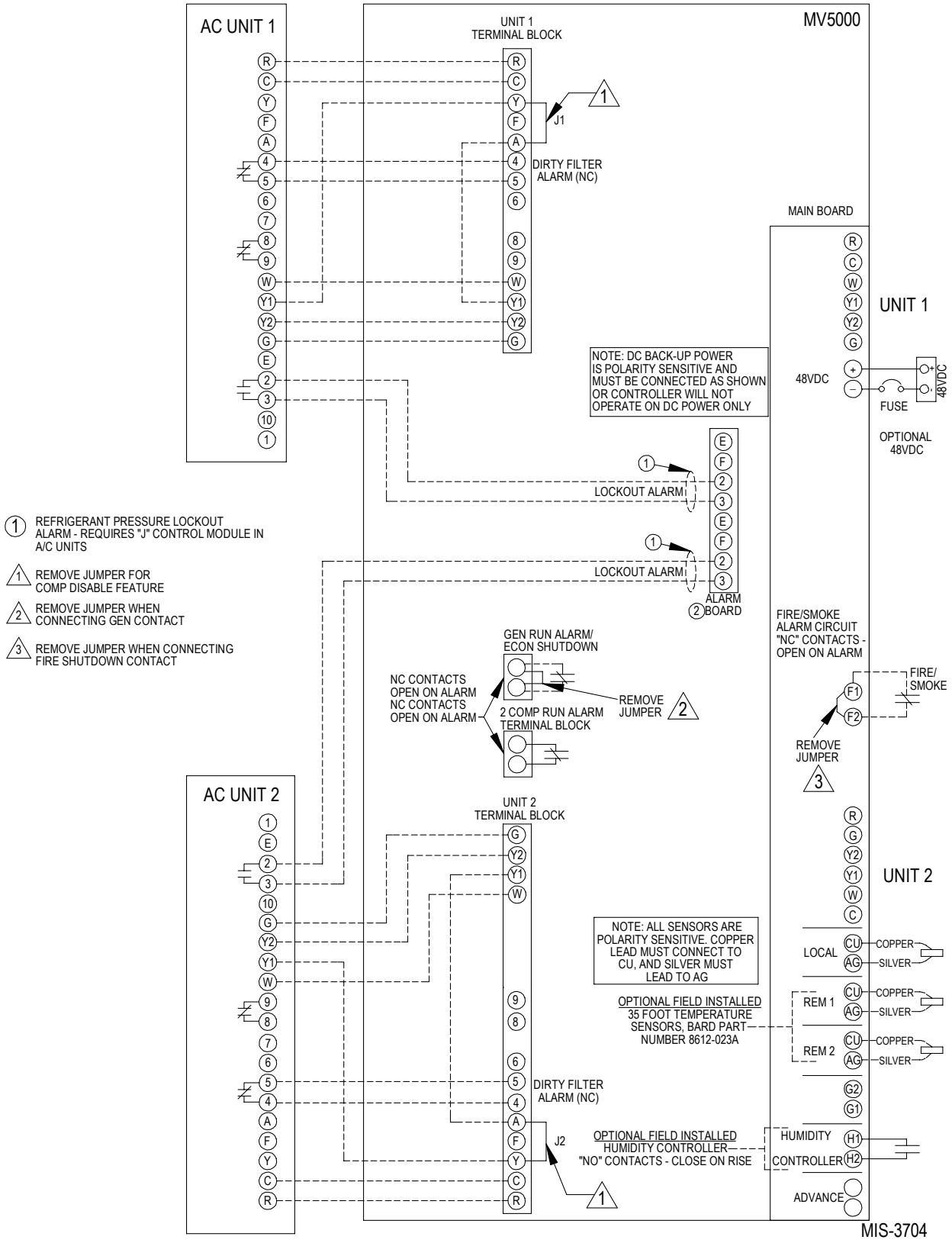

FIGURE 10
MV5000-BC Controller With Alarm Board and Communication Board
1-Stage (HA/H**L Series) Air Conditioners, Revision 2 Units Only (Built Before 5/15)**

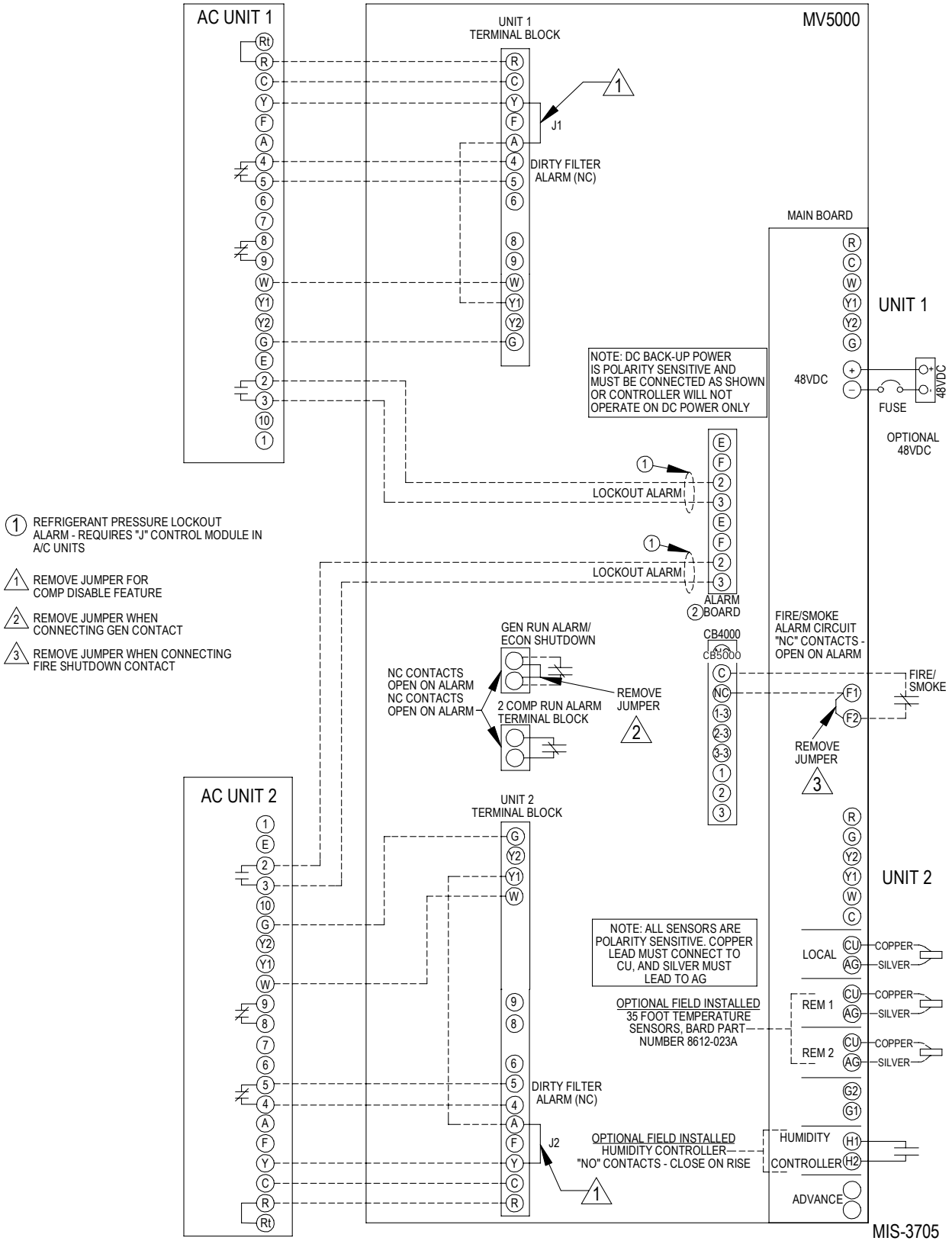

FIGURE 11
MV5000-BC Controller With Alarm Board and Communication Board
2-Stage (HA*S/HL*S Series) Air Conditioners, Revision 2 Units Only (Built Before 5/15)

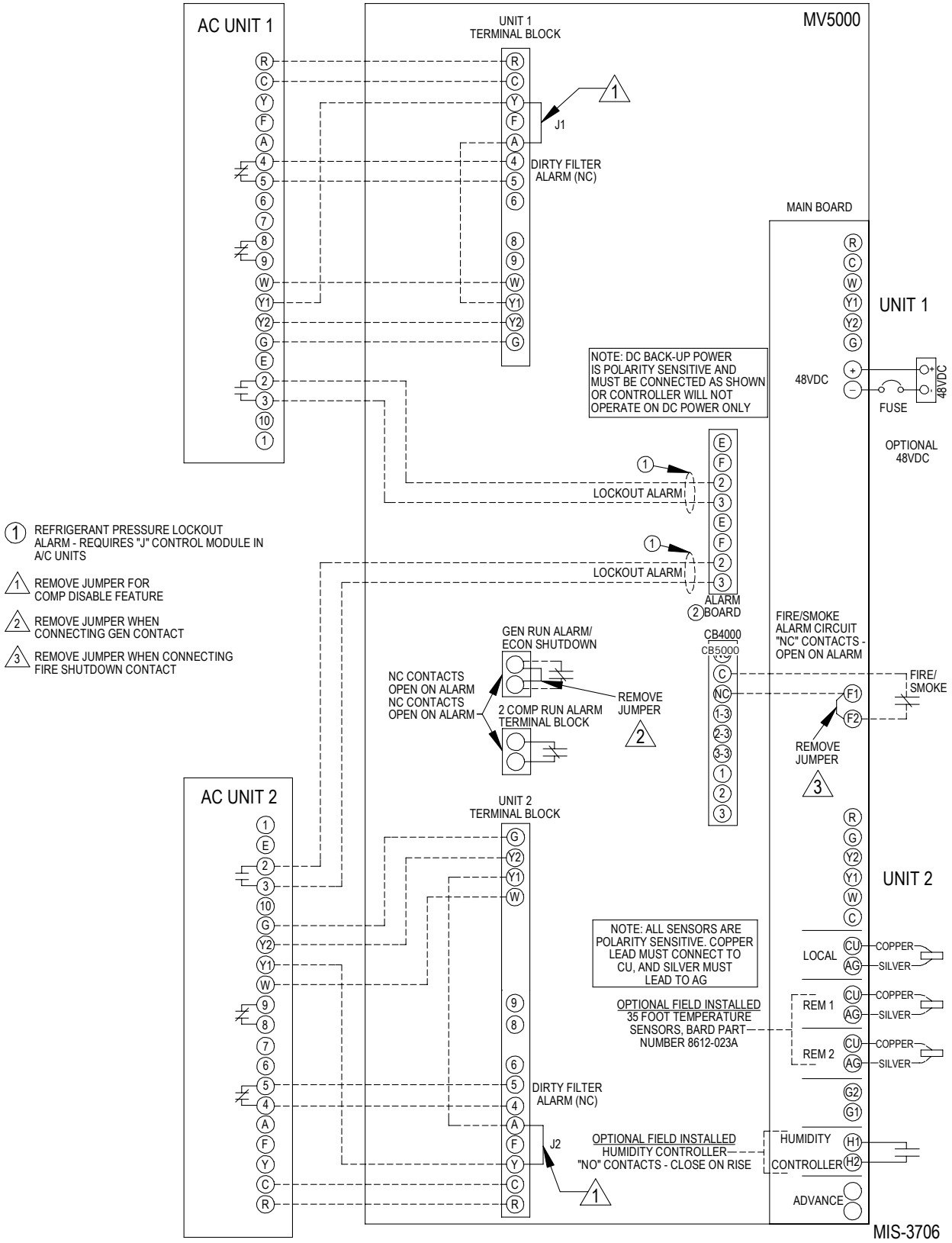

FIGURE 12
MV5000-B Controller With Alarm Board
1-Stage (HA/H**L Series) Air Conditioners, Revision 2 Units Only (Built Before 5/15)**
with ECONWMT Economizers

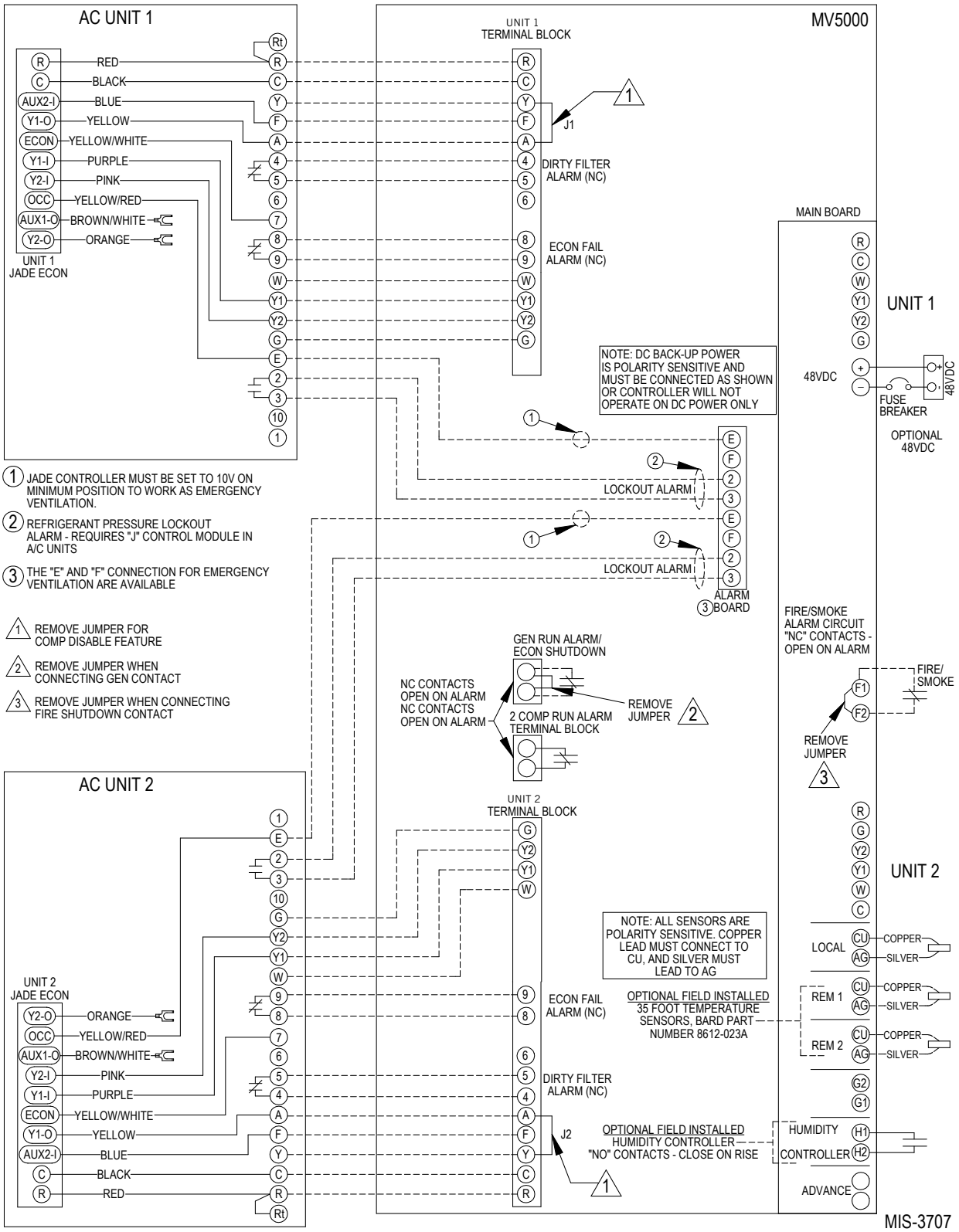

FIGURE 13
MV5000-BC Controller With Alarm Board and Communication Board
1-Stage (HA/H**L Series) Air Conditioners, Revision 2 Units Only (Built Before 5/15)**
with ECONWMT Economizers

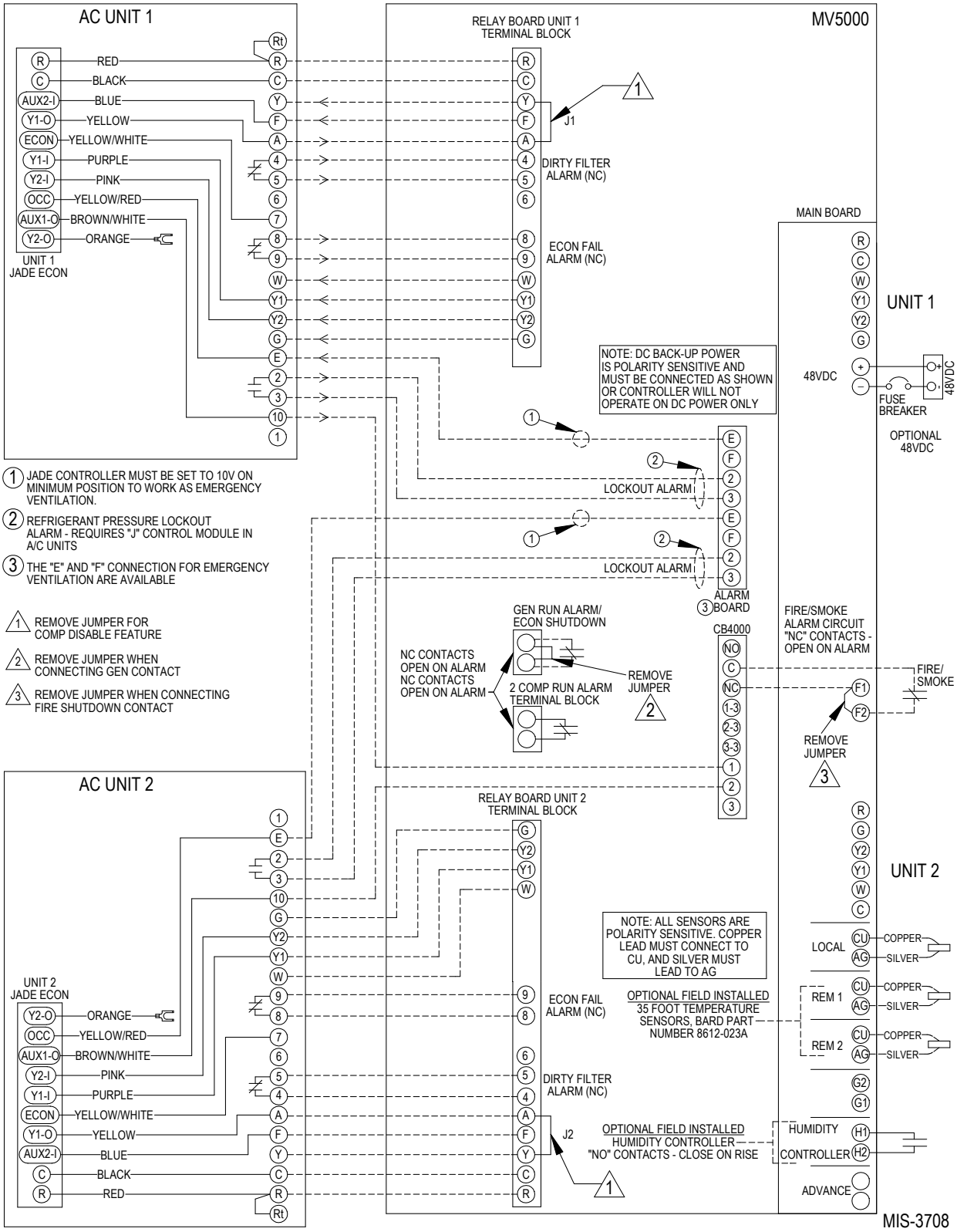

ECONOMIZER FAILURE ALARM

If the economizer blade fails to travel 50% (factory default) or more within 200 seconds of a command to open or close, the normally closed contacts of terminals 8 and 9 will open.

To utilize this feature, terminals 8 and 9 must be connected to the shelter alarm panel.

2-COMPRESSOR RUN ALARM

If both compressors are running at the same time, the 2-Compressor Run Alarm will open indicating this condition.

GENERATOR RUN/ECONOMIZER SHUTDOWN FEATURE

Relays R7 and R8 – If the normally closed contact from the generator opens, this signals the main MV5000 board that the generator is running and signals both economizers to shut down.

COMPRESSOR SWITCH TO LAG UNIT, LATCHING LIGHTS AND LOCKOUT LEAD FEATURES

NOTE: *Remove jumpers J1 and J2 to enable this feature in MV5000 Controller. See Figures 1 – 13 or Controller Internal Wiring Diagram 4093-160. See also Table 2 on page 18.*

To reset Light 1, cycle power to Unit 2.

To reset Light 2, cycle power to Unit 1.

NOTE: *To defeat the (previous) Switch to Lag and Latching Light feature, the following steps must be performed:*

1. Remove jumpers J3 and J4..
2. Unwire the two (2) purple/white wires from the Advance terminals on the back of the MV5000 main board and wire nut together.

ALARM WIRING

Alarm relays can be wired for NO (close on alarm) or NC (open on alarm) strategy.

Alarm relays can be used individually if there are enough available building alarm points, or can be arranged into smaller groups or even a single group so that all alarm capabilities can be utilized.

When multiple alarms are grouped together and issued as a single alarm, there will be no offsite indication of which specific problem may have occurred, only that one of the alarms in the group has been triggered. The individual alarm problem will be shown on the LED display on the face of the controller.

NOTE: *All alarm and output relays are Form C (SPDT) dry contacts rated 1A @ 24 VAC.*

NOTE: *All alarm relay outputs have 10-second delay in actually issuing to protect against nuisance alarm signals.*

The Power Loss 1, Power Loss 2 and controller alarm relays are all "reverse actuated", which means they are continuously energized (the NO contact is closed) and switched to NC position upon alarm condition. Therefore, it is important to closely follow the alarm board connection diagrams that follow.

Any alarm feature that is not desired can simply be ignored (not connected).

2ND STAGE COOLING ALARM

This alarm output is available for use if desired. It is important to note that in some installations, due to A/C system sizing and internal heat load, the secondary (lag) air conditioning unit may be called upon to assist the lead air conditioner some of the time. If this is the case, or possibly when additional heat load is added, using the 2nd stage cooling alarm will cause nuisance alarm conditions.

NOTE: *For units with 2-stage compressors, the dual stage cooling alarm activates on cooling Stage 3 initiation. Menu Step 23, CoPr, must be set to "2" for this to occur, otherwise alarm will activate on cooling call Stage 2 causing nuisance alarm.*

For installations where it is known that there is 100% redundancy (one air conditioning unit can handle 100% of the load 100% of the time), use of the 2nd Stage Cooling Alarm is a method to issue an alarm signal that the lead air conditioner is down (or not delivering full capacity) and that the lag air conditioner is now operating.

REFRIGERANT PRESSURE ALARMS

Air conditioners with "J" control module are equipped with an alarm relay that is activated upon high or low refrigerant pressure lockout conditions. Connecting terminals 2 and 3 from the air conditioner 24V terminal block to the matching terminals 2 and 3 on the alarm board will allow these alarms to function.

EMERGENCY VENTILATION SEQUENCE

For units with economizers, there are two emergency ventilation sequences designed into the controller. Both require the -B alarm board and connection of terminals E and F from the air conditioner 24V terminal block to the matching terminals on the alarm board.

NOTE: *The E and F wiring connections at the 24V terminal block in the A/C units are different for older style EIFM economizers than for newer style ECONWMT economizers. Refer to the appropriate controller connection diagrams (see Table 3 on page 19).*

Sequence one requires a refrigerant pressure alarm, coupled with high temperature alarm condition No. 1 (HAL 1 set point). If both of these conditions occur, the economizer in the air conditioner that issued the refrigerant alarm will drive open to ventilate the building.

Sequence two (HAL 2 set point) is activated by high temperature alarm No. 2, and will initiate even without a refrigerant pressure alarm signal. Both economizers will be activated to provide emergency ventilation. This strategy help protect against building overheating if air conditioner(s) are inoperative for non-pressure related reasons (bad compressor, contactor, run capacitor, etc.).

LEAD/LAG CONTROLLER FAILURE ALARM

The lead/lag controller failure alarm will be present if the alarm board determines that the microprocessor on the main board is not functioning. It does this by monitoring a "heartbeat" from the main board. This can be caused by three scenarios:

1. The microprocessor has failed on the main board.
2. Communications between the two boards has beeen interrupted by a broken cable.
3. The alarm board has failed. This is the least likely cause. If the alarm board has failed, there probably wouldn't be a controller failure alarm.

FIGURE 14
Alarm Board Connections
for Normally Closed "NC" Open-on-Alarm Strategy

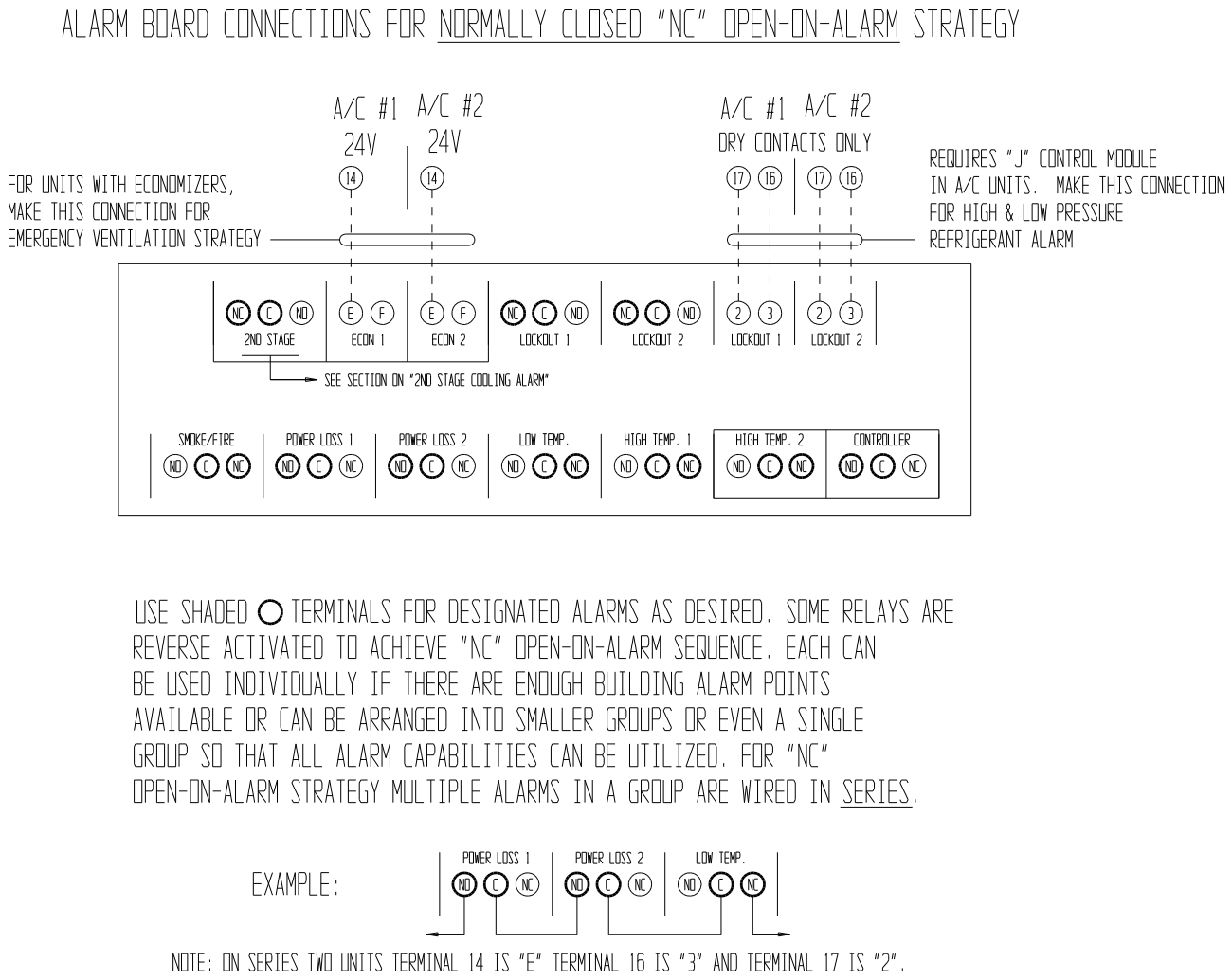

IMPORTANT! *LED display board is shipped loose to protect it from possible damage during installation of the wiring to main controller board and/or the alarm board. It is polarity sensitive and keyed so it can only be installed in correct position.*

FIGURE 15
Alarm Board Connections
for Normally Open "NO" Close-on-Alarm Strategy

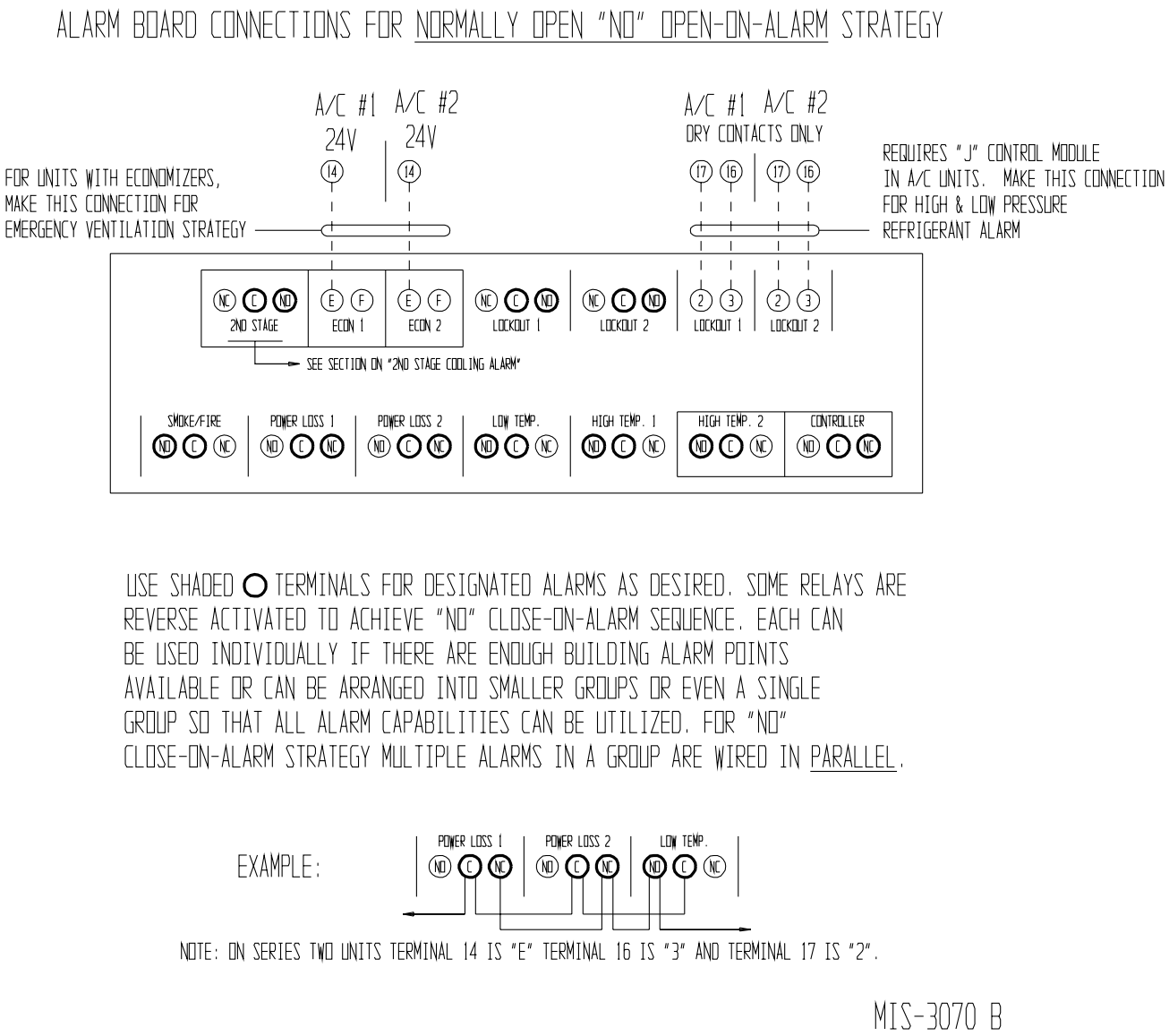

IMPORTANT! *LED display board is shipped loose to protect it from possible damage during installation of the wiring to main controller board and/or the alarm board. It is polarity sensitive and keyed so it can only be installed in correct position.*

PROGRAMMING INSTRUCTIONS

To swap lead and lag unit positions, press the ADVANCE button.

To enter the Program mode, press the PROGRAM button and release it when the message PROG appears on the display. When in Program mode, the DOWN and UP arrows are used to scroll through the programming steps.

A FLASHING display means that the function or choice is "SET", and the display will alternate between the step function and setting.

To change the setting of any step, press the CHANGE button and the display will stop flashing, allowing change to the setting by using the DOWN or UP arrows. When desired setting is reached, press the SAVE button, and proceed as desired. When done with programming changes, press the PROGRAM button until display stops flashing and room temperature display is shown. If no buttons are pushed within 30 seconds, the controller will automatically revert back to "RUN" mode.

To reset all controller settings to the factory default values, press the PROGRAM button for 10 seconds until display reads dEF.

NOTE: *When the controller has the security locking feature enabled, no changes to any selectable features can be made and the default reset feature is also locked out. All of the programmable features/settings can be reviewed using the Program button and Up or Down arrows, but any attempt to change settings using the Change button will result is display showing "Locd" indicating controller is locked. See section on Security (Locking) Feature.*

NOTE: *When using the controller buttons to review settings or making changes,* ***push and hold*** *the buttons for approximately 1 second or until the display changes. Quickly pushing or jabbing the buttons will not allow the controller to respond.*

To test board, remove wires from Advance terminals.

LEAD UNIT	**LAG UNIT**			**LEAD UNIT**	**LAG UNIT**	**Lights**		**2 Compressor Run Alarm**	**Notes**
Input	Input	Input	Input	Output	Output	Output	Output	Output	
A	A	Jumpers J1 & J2	Jumpers J3 & J4	Y	Y	L1	L2		
OFF	OFF	OFF	OFF	OFF	OFF	OFF	OFF	NO	
ON	OFF	OFF	OFF	ON	OFF	OFF	OFF	NO	
ON	ON	OFF	OFF	OFF, Not Locked	ON	ON, Not Locked	OFF	NO	
OFF	OFF	ON	OFF	OFF	OFF	OFF	OFF	NO	
ON	OFF	ON	OFF	ON	OFF	OFF	OFF	NO	
ON	ON	ON	OFF	ON	ON	ON, Not Locked	OFF	YES, Will Cycle	
OFF	OFF	OFF	ON	OFF	OFF	OFF	OFF	NO	
ON	OFF	OFF	ON	ON	OFF	OFF	OFF	NO	
ON	ON	OFF	ON	Locked OFF	ON	Locked ON	OFF	NO	Cycle power to Lag unit to reset
OFF	OFF	ON	ON	OFF	OFF	OFF	OFF	NO	
ON	OFF	ON	ON	ON	OFF	OFF	OFF	NO	
ON	ON	ON	ON	ON	ON	Locked ON	OFF	YES, Will Cycle	Cycle power to Lag unit to reset

If generator is running, Econs are shut down through Terminal F

FIGURE 16
Parts List Drawing

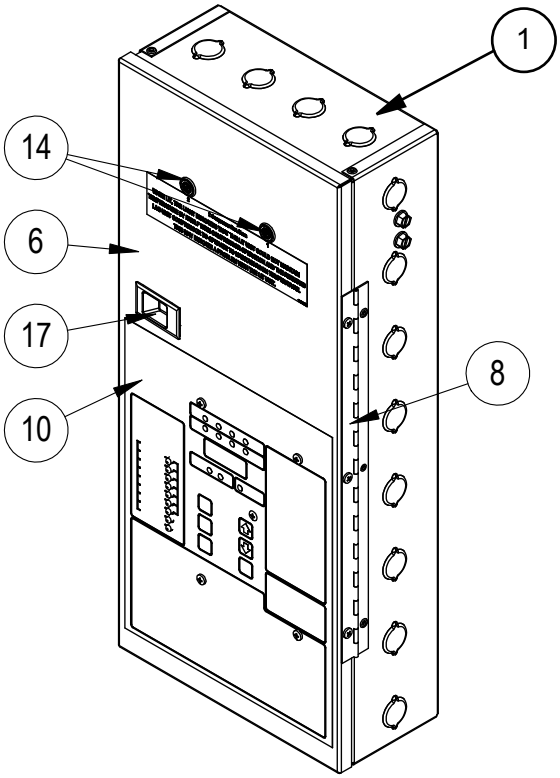

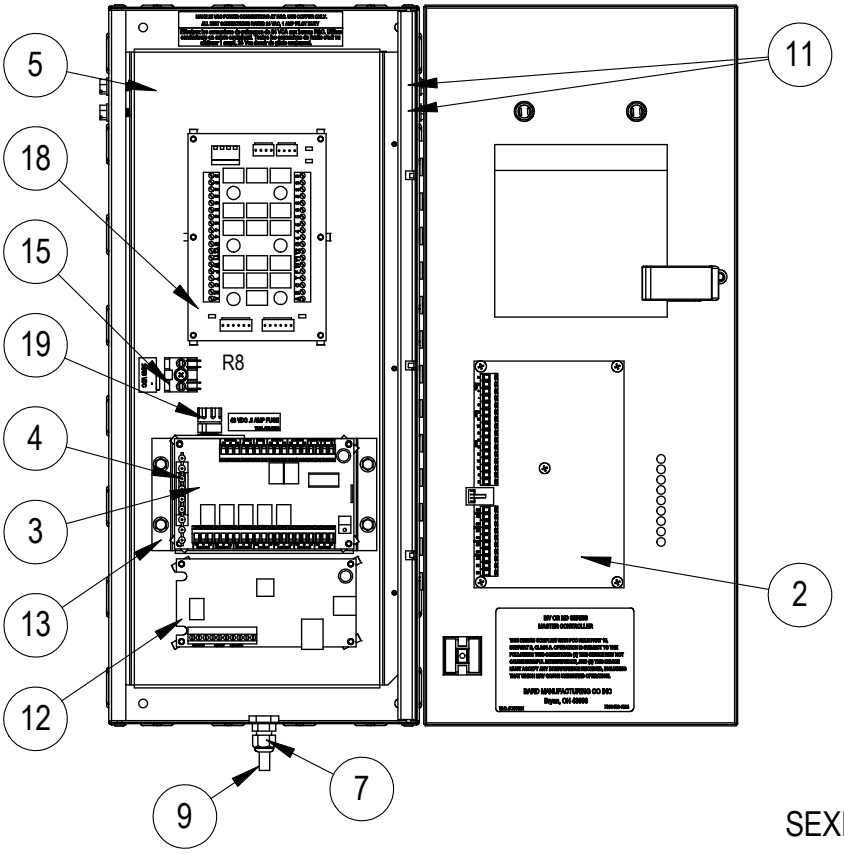

SEXP-776 A

Parts List

Dwg. No.	Part No.	Description	MV5000-B	AB3000-B	MV5000-BC	CB5000
1	127-518-4	Control Box	X		X	
2	8612-048	Controller Board	X		X	
3	8612-050	Alarm Board B	X	X	X	
4	8612-022	Alarm Display	X	X	X	
5	113-598-4	Support Bracket	X		X	
6	153-659-4	Control Box Door	X		X	
7	8611-099	LTF Fitting	X		X	
8	5400-002	Hinge	X		X	
9	8612-023A	Sensor	X		X	
10	7961-758	Label/Keypad	X		X	
11	8611-006	Ground Lug	2		2	
12	8612-047	Communication Board IPV6			X	X
13	113-597-4	Alarm Bracket	X		X	
14	8611-094	Light	2		X	
15	8607-030	Terminal Block	X		X	
17	1171-067	Door Latch	X		X	
18	8612-046	Relay Board	X		X	
19	8614-056	Fuse Holder	X		X	
NS	4093-160	Wiring Diagram	X		X	
NS	8612-039	Communication Cable			X	
NS	8614-057	Fuse .5 Amp	X		X	
NS	8612-051	Alarm Board Cable		X		

Bard®
SINCE 1914
Climate Control Solutions

MV Series

Solid State Dual Unit Lead/Lag Controller

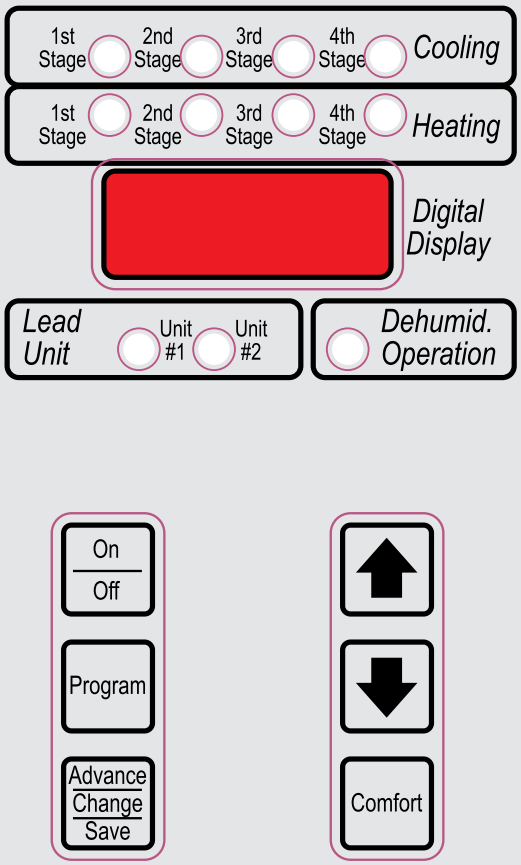

Alarms

Alarm boards are optional and can be factory or field installed. See inside of controller for any alarm functions.

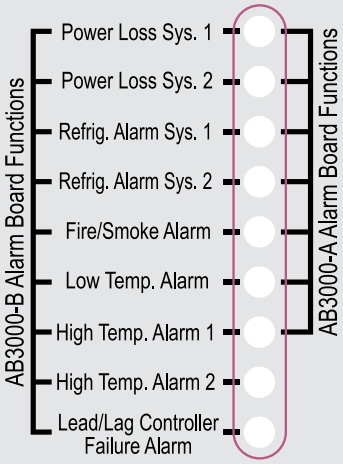

Operating Instructions

1. To swap lead and lag units press "ADVANCE".
2. To enter the Program mode press the "Program" button and release it when "Pro9" appears. Use "DOWN" or "UP" arrows to scroll through menu.
3. A "Flashing" display means that the function or choice is "Set", and the display will alternate between the step function and setting.
4. To change the setting of any step press the "Change" button and the display will stop flashing, allowing change to the setting by using the "Down" or "Up" arrows. When desired setting is reached press the "Save" button, and proceed as desired.
5. When done programming press the "Program" button until display stops flashing and room temperature is shown. If no buttons are pushed within 30-seconds the controller will automatically revert back to "Run" mode.

Comfort Mode

Press "Comfort" button once to reset to 72F/22C Cooling and 68F/20C Heating for 1-hour. Display will flash during override period. Press 2nd-time to cancel during override if desired, or controller will automatically revert to selected SP after 1-hour.

Program Menu

NOTE: Push and hold Up or Down arrows for 1-second until display blanks to move between steps.

1	LSEn	Temperature at local (main) Sensor	
2	r1	Temperature at Remote 1 sensor location*	
3	r2	Temperature at Remote 2 sensor location*	
4	SP	Cooling setpoint temperature (65 to 90F or 18.3 to 32.2C - Default is 77F/25C)	
5	db	Deadband between cooling and heating setpoint (2 to 40F or 1.1 to 22.2C - Default is 27F/15C)	
6	cFAn	Continuous blower operation (None, Lead, Both - Default is LEAD)	
7	dEG	Degree display (F or C - Default is F)	
8	ALT	Alternating Lead-Lag-Lead-Lag Sequence or Non-Alternating Lead-Lead-Lag-Lag Sequence (Yes or No - Default is Yes for Alternating)	
9	LLCO	Lead-Lag changeover time (Days) (1 to 30 days, or 0 for disabled - Default is 7)	
10	HP	Heat pump logic enabled - only for 1-stage heat pumps and forces Lead-Lag sequence and overrides a Non-Alt setting (Yes or No - Default is No)	
11	CbdS	Unit 1 and 2 blowers automatically both run if delta T>5F between any 2 connected sensors (Yes or No - Default is Yes)	
12	OFdE	3-minute lead unit & 4-minute lag unit off-delay enabled	(Yes or No - Default is No)
13	crun	Minimum of 3-minute compressor runtime enabled	(Yes or No - Default is No)
14	LoAL	Low temperature alarm setpoint	(28 to 65F or 21.1 to 48.8C - Default is 45F/7.2C)
15	HAL1	High temperature alarm Level 1 setpoint (70F to 120F or 21.1 to 48.8C - Default is 90F/32.2C)	
16	HAL2	High temperature alarm Level 2 setpoint	(70F to 120F or 21.1 to 49C - Default is 95F/35C)
17	ISd2	Inter-stage differential from Stage 1 to 2	(2, 3, 4, 5 or 6F - Default is 4)
18	ISd3	Inter-stage differential from Stage 2 to 3	(2 or 3F - Default is 2)
19	ISd4	Inter-stage differential from Stage 3 to Stage 4	(2 or 3F - Default is 2)
20	CSon	Turn "On" above SP for Stage 1 Cooling	(+1 or +2 - Default is +2)
21	CSoF	Turn "Off" below SP for Stage 1 Cooling Note: For CSon and CSoF Stage 2, 3 and 4 Cooling are automatically same as Stage 1	(-1, -2, -3, or -4F - Default is -4)
22	HSoo	All Heating stages are equal -/+ On & Off differential	(-1/+1 or -2/+2 - Default is -2/+2)
23	CoPr	1 or 2-stage compressor, if set to 1 the 2nd-Stage Cooling Alarm activates on Cooling Call 2 If set to 2 the 2nd-Stage Cooling Alarm activates on Cooling Call 3.	(1 or 2 - Default is 1)
24	Locd	Controller is Locked. Consult building authority for further instructions.	

* r1 and r2 will display temperature only if optional remote sensors are installed. If sensors are not installed these are omitted in the display sequence. If r1 and/or r2 sensor installed the MV Series will control to the "average" of the connected sensors. Consult installation instructions for additional details.

7961-758 MV Series