INSTALLATION AND SERVICE INSTRUCTIONS

FOR AT&T ONLY

LC1000-300/LC1500-300 LEAD/LAG CONTROLLER

Part of the DC Free Cooling Unit System

Models:

LC1000-300/BLD.10293
LC1500-300/BLD.10291

NOTE: ***LC1000 or LC1500 Controllers must be used with D-Series Wall-Mount Units***

Bard Manufacturing Company, Inc.
Bryan, Ohio 43506

www.bardhvac.com

Manual: 2100-661B
Supersedes: 2100-661A
Date: 3-28-17

CONTENTS

SECTION 1: Installation Instructions 5
List of Necessary Materials/Tools 6
LC1000-300/LC1500-300 Controller Installation 7
System Start-Up 23

SECTION 2: Service Instructions 27
Sequence of Operation 28
Advanced Programming 32
Troubleshooting 38

SECTION 3: Appendix 41
LC1000-300/LC1500-300 Controller Architecture 42

FIGURES AND TABLES

Figure 1.1 Typical LC1000/1500 Component Location 7
Figure 1.2 LC1000/1500 Fused Power Supply ..... Terminal 8
Figure 1.3 Remote Temp/Humidity Sensor Install 9
Figure 1.4 Additional Remote Temp Sensor Install 10
Figure 1.5 Power and Signal Connections – Smoke 11
Figure 1.6 Power/Signal Connections – Hydrogen 12
Figure 1.7 LC1000 and LC1500 Generator Run 12
Figure 1.8 **WIRING:** LC1000 External Alarm Wiring 13
Figure 1.9 **WIRING:** LC1500 External Alarm Wiring 14
Figure 1.10 **WIRING:** Communication Wiring (Daisy Chain Method) 15
Figure 1.11 **WIRING:** Communication Wiring (Alternate Method) 15
Figure 1.12 **WIRING:** Communication Wiring: Controller Termination 16
Figure 1.13 **WIRING:** Communication Wiring: 1st Unit Termination 17
Figure 1.14 **WIRING:** Communication Wiring: 2nd Unit Termination 18
Figure 1.15 Controller Supply Wiring 19
Figure 1.16 Controller Grounding Posts 19
Figure 1.17 **WIRING:** LC1000/1500 Wiring Diagram 21
Figure 1.18 **WIRING:** LC1500 Punch-Down Block Wiring 22
Figure 1.19 LC1000/1500 Controller and TEC-EYE™ Display 23
Figure 1.20 Clock/Scheduler Menu 24
Figure 1.21 Status Display Showing Units "Online" 24
Figure 1.22 Executing Run Test 24

Figure 2.1 Controller Board and Terminal Block 28
Figure 2.2 LC Series Controller Control Board 29
Figure 2.3 LC1000/1500 Controller Display 32
Figure 2.4 Controller Status Display 33
Figure 2.5 Low Voltage Connections 37

Table 1.1 Terminal Block Index 20
Table 1.2 Controller Default Settings 25

Table 2.1 Controller Programmable Features and Default Settings 35

DC FREE COOLING UNIT SYSTEM

The Bard DC Free Cooling Unit system is composed of two (2) D-Series DUAL-TEC™ wall-mounted air conditioners matched with one (1) lead/lag controller. The D-Series, specifically engineered for the telecom market, can provide outdoor air cooling during power loss situations through the use of onsite -48VDC positive ground battery banks.

NOTE: *The lead/lag controller and the D-Series wall-mount units are designed specifically to work together. The ontroller cannot run other Bard models or other brands of systems, nor can other controllers or thermostats run the D-Series wall-mount units. They are a complete system, and must be used together.*

CONTROLLER

Two models: LC1000-300 and LC1500-300 (controllers and accessories included shown below)

LC1000-300 Series – New Shelters Only

Programmable Logic Controller

TEC-EYE™ Hand-Held Diagnostic Tool

Remote Temperature/ Humidity Sensor

Communication EMI Filters

LC1500-300 Series – EOL and All HVAC Replacement Projects

Programmable Logic Controller with Attached 66 Punch-Down Block

TEC-EYE™ Hand-Held Diagnostic Tool

Communication EMI Filters

Remote Temperature/ Humidity Sensor

VDC Smoke Detector

OPTIONAL 8301-061

VDC Hydrogen Detector

The equipment covered in this manual is to be installed by trained, experienced service and installation technicians.

These instructions should be carefully read before beginning the installation. Note particularly any tags and/or labels attached to the equipment.

While these instructions are intended as a general recommended guide, they do not supersede any national and/or local codes in any way. Authorities having jurisdiction should be consulted before the installation is made. See **ADDITIONAL PUBLICATIONS** for information on codes and standards.

Shipping Damage

Upon receipt of equipment, the cartons should be checked for external signs of shipping damage. If damage is found, the receiving party must contact the last carrier immediately, preferably in writing, requesting inspection by the carrier's agent.

ADDITIONAL PUBLICATIONS

These publications can help when installing the air conditioner or heat pump. They can usually be found at the local library or purchased them directly from the publisher. Be sure to consult the current edition of each standard.

National Electrical Code.....ANSI/NFPA 70

Standard for the Installation of Air Conditioning and Ventilating Systems .....ANSI/NFPA 90A

Standard for Warm Air Heating and Air Conditioning Systems .....ANSI/NFPA 90B

Load Calculation for Residential Winter and Summer Air Conditioning ..... ACCA Manual J

Duct Design for Residential Winter and Summer Air Conditioning and Equipment Selection ..... ACCA Manual D

For more information, contact these publishers:

Air Conditioning Contractors of America (ACCA)
1712 New Hampshire Ave. N.W.
Washington, DC 20009
Telephone: (202) 483-9370 Fax: (202) 234-4721

American National Standards Institute (ANSI)
11 West Street, 13th Floor
New York, NY 10036
Telephone: (212) 642-4900 Fax: (212) 302-1286

American Society of Heating, Refrigeration and Air Conditioning Engineers, Inc. (ASHRAE)
1791 Tullie Circle, N.E.
Atlanta, GA 30329-2305
Telephone: (404) 636-8400 Fax: (404) 321-5478

National Fire Protection Association (NFPA)
Batterymarch Park
P. O. Box 9101
Quincy, MA 02269-9901
Telephone: (800) 344-3555 Fax: (617) 984-7057

ANSI Z535.5 Definitions:

Danger: Indicate[s] a hazardous situation which, if not avoided, will result in death or serious injury. The signal word "DANGER" is to be limited to the most extreme situations. DANGER [signs] should not be used for property damage hazards unless personal injury risk appropriate to these levels is also involved.

Warning: Indicate[s] a hazardous situation which, if not avoided, could result in death or serious injury. WARNING [signs] should not be used for property damage hazards unless personal injury risk appropriate to this level is also involved.

Caution: Indicate[s] a hazardous situation which, if not avoided, could result in minor or moderate injury. CAUTION [signs] without a safety alert symbol may be used to alert against unsafe practices that can result in property damage only.

Notice: [this header is] preferred to address practices not related to personal injury. The safety alert symbol shall not be used with this signal word. As an alternative to "NOTICE" the word "CAUTION" without the safety alert symbol may be used to indicate a message not related to personal injury.

SECTION 1:

INSTALLATION INSTRUCTIONS

LIST OF NECESSARY MATERIALS/TOOLS

Additional hardware and miscellaneous supplies are needed for installation. These items are field supplied and must be sourced before installation. This list also includes tools needed for installation.

LIST OF MATERIALS/TOOLS

- Personal protective equipment/safety devices
- Miscellaneous hand and power tools and jobsite or shop materials
- Electrical supplies
  - One (1) 5A circuit breaker for the shelter DC power plant (for the LC1000/1500 controller)
  - 16 gauge power wire to connect controller to DC power source
  - Communication wire: 2-wire, 18 gauge, shielded with drain
  - 18 gauge non-shielded wire for connecting smoke detector, hydrogen detector and/or generator, if applicable, to controller
  - CAT 6 Ethernet cable of field-determined length (for remote communication, if applicable)
  - Miscellaneous electrical supplies including rigid/flexible conduit and fittings, junction boxes, wire connectors and supports

NOTICE

The following are required and <u>must be sourced prior to installation of these units</u>.

- **One (1) 5A circuit breaker for the shelter DC power plant (for the controller)**

Circuit breakers for Emerson Network Power (ENP) power plants (used in most telecomm shelters built today) are available directly through the following distributors:

- **Emerson Network Power: 440.288.1122**
- **Master Electronics: 888.473.5297 or www.onlinecomponents.com**

Emerson Network Power (ENP) Part Number

- **5A circuit breaker: P/N 101598**

Always confirm the application before ordering.

FIGURE 1.1
Typical LC1000-300/LC1500-300 Component Location

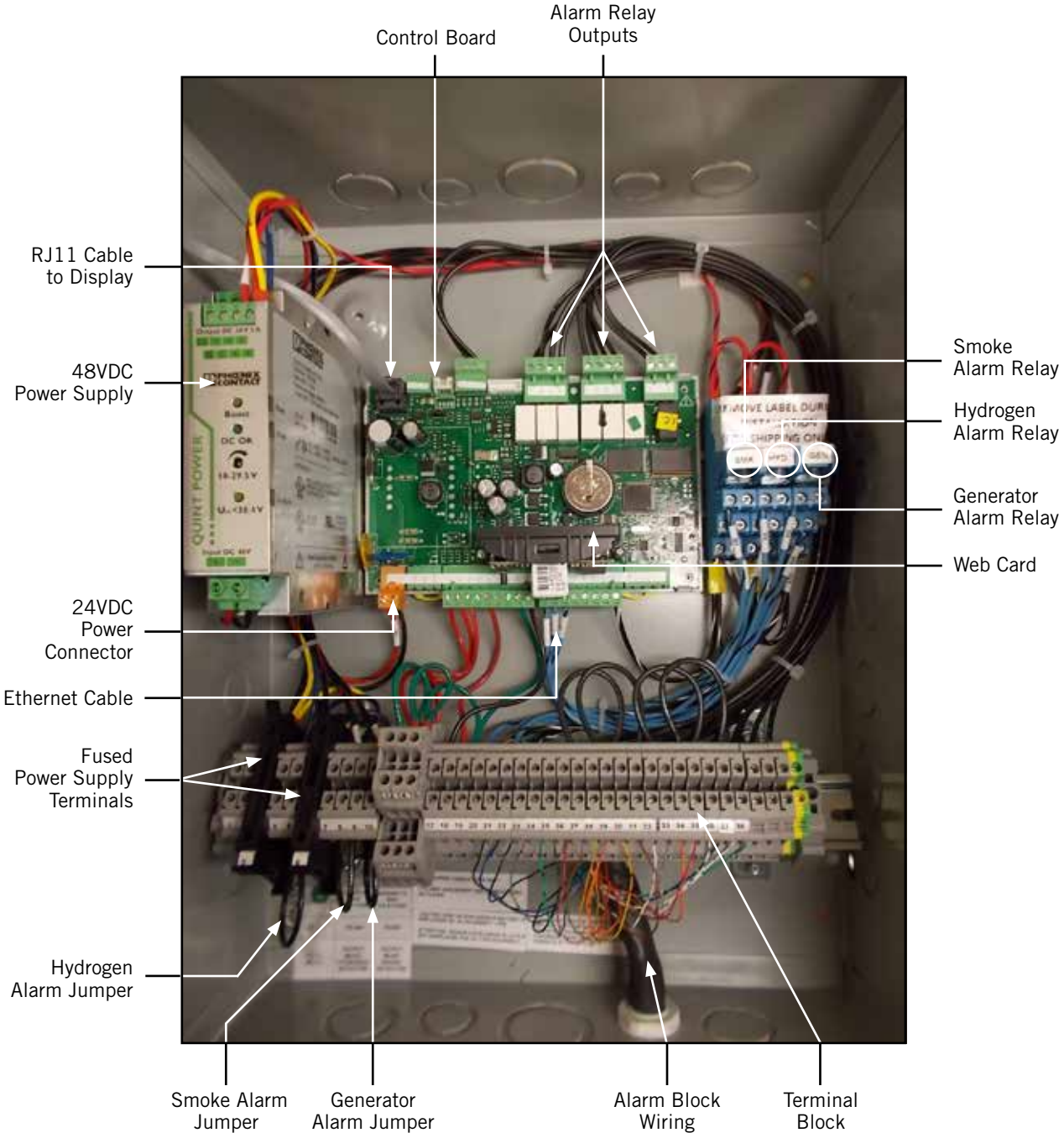

⚠ WARNING

Electrical shock hazard.

Disconnect both VAC and VDC power supplies before servicing.

Failure to do so could result in electric shock or death.

LC1000-300/LC1500-300 CONTROLLER

The LC1000-300 (or LC1500-300) controller is part of the DC Free Cooling Unit system. It is used to control two wall-mount air conditioners from one controller. The microprocessor control provides an easy-to-read interface with large LCD graphical display. It provides total redundancy for the structure and equal wear on both units. The controller is configured for lead/lag/lead/lag sequence.

Differences Between the LC1000-300 and LC1500-300

There are two separate lead-lag controllers to choose from and each one serves a specific application. The LC1000 controller comes pre-packaged with a TEC-EYE™ hand-held diagnostic tool, one remote temperature/humidity sensor and a pair of communication EMI filters. This controller is meant for new shelter construction only, and should never be used in the field as a retrofit replacement. The LC1500 controller comes pre-packaged with the TEC-EYE™ hand-held diagnostic tool, one remote temperature/humidity sensor, a pair of communication EMI filters and a smoke detector. (The optional 8301-061 hydrogen detector, if ordered from Bard, is also included with the LC1500 controller). The LC1500 has an umbilical cord and 66 punch-down block attached. The LC1500 controller is to be used in all retrofit applications, and all existing smoke detectors (and hydrogen detectors, if applicable) are to be removed in lieu of the new detectors.

Conduit is recommended for all wiring. Use separate conduits for communication and supply wiring.

1. Mounting the Controller

Because the controller utilizes a remote temperature/humidity sensor as opposed to one located in the controller box, the controller itself can be installed in any indoor location that is suitable, preferably at eye level. Four (4) mounting holes are provided for mounting to the wall and holes for conduit connections are provided in both the base, sides and top of the controller. If installing the LC1500, be sure to leave room to mount the 66 punch-down block (attached with an umbilical cord) near the controller.

The LC1000/1500 controller includes two fused power supply terminals in the terminal block. Before connecting wires to the terminal block, confirm that the fuses in the two fuse holders are in the proper position (active) as shown in see Figure 1.2.

FIGURE 1.2
LC1000/1500 Fused Power Supply Terminal

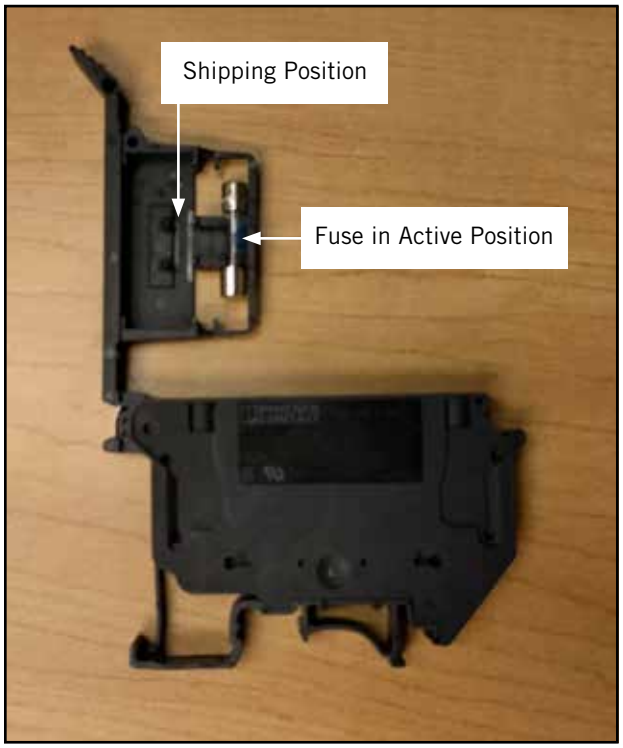

2. Installing Remote Indoor Sensor(s)

One remote indoor temperature/humidity sensor is included with the controller. This sensor must be installed for proper operation. Use shielded cable to mount the temperature/humidity sensor in a location least likely to be affected by open doors, rack-mounted fans, radiant heat sources, etc. Locating the sensor between both return grilles is often the best location, but every installation is unique. Location height should be approximately 48" above the floor. The sensor should be installed on a 4" by 4" junction box to allow for control wire conduit.

FIGURE 1.3
Remote Indoor Temperature/Humidity Sensor Installation

1. Connect wires from 18 guage shielded cable to terminals #11, #12, #17, #18 and #19 of the terminal block.

TB#	Wire Mark	Sensor	Description
11	B1	NTC OUT	Indoor Remote Sensor (Zone 1)
12	GND	NTC OUT	Ground
17	+VDC	+ (G)	Power for B5
18	B5	OUT H	Remote Indoor Humidity Sensor: 0-1 VDC
19	GND	M (GO)	Ground

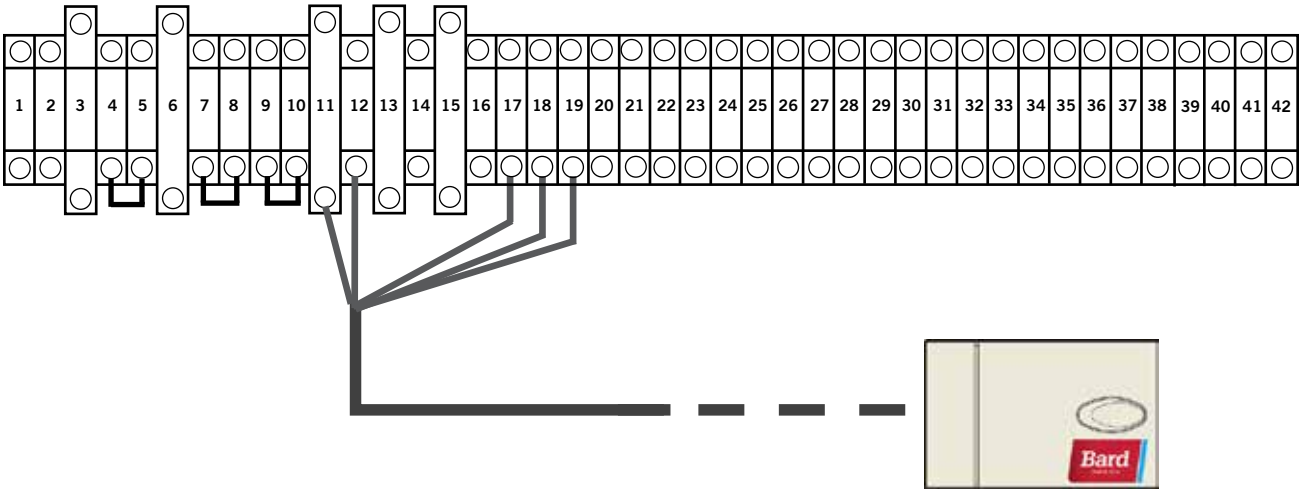

2. Connect the other end of the shielded cable to the sensor terminals. Be sure wires are connected to proper terminals as shown in table above.

   Sensor is best mounted on a junction box, and it is recommended that the cable be in conduit.

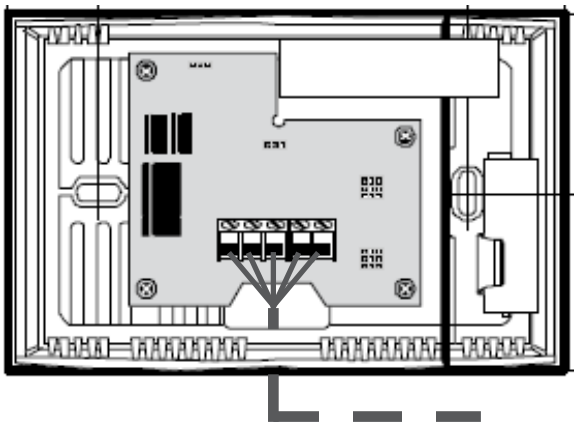

For proper operation, the remote indoor temperature/humidity sensor must be configured properly with the controller. If only the single remote indoor temperature/humidity sensor supplied with the controller is installed, the configuration setting is "1". This is the default setting. For information on checking the remote indoor temperature sensor configuration, see **Configuring Additional Remote Indoor Temperature Sensors** on page 34.

For unique situations involving temperature flux within the shelter, up to two (2) additional temperature-only sensors may be purchased and installed to provide temperature-averaging or highest-temperature protection (see Figure 1.4). Please see **Configuring Additional Remote Indoor Temperature Sensors** on page 34 in the Service section of this manual to set up the additional remotes.

FIGURE 1.4
Additional Remote Temperature Sensor Installation

Up to two (2) additional temperature-only sensors may be purchased and installed for averaging or highest-temp mode. Use terminals #13, #14, #15 and #16. These connections are not polarity-sensitive.

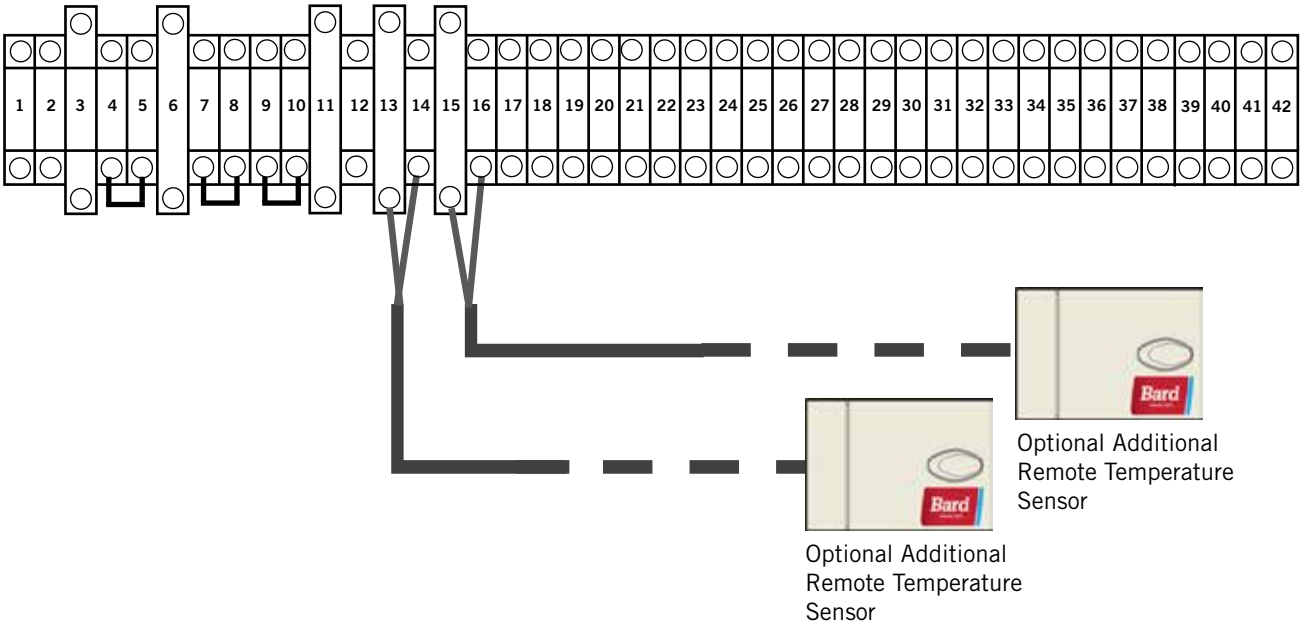

3. Smoke, Hydrogen and Generator Alarms

The LC1500 controller is shipped with a new smoke detector (and optional hydrogen detector if ordered from Bard) for use in existing shelters. The existing smoke detector (and hydrogen detector, if applicable) should be removed and disposed of properly. In cases where there are no existing detectors, follow the installation instructions provided with each detector for location and mounting practices. Both LC1000 and LC1500 controllers have the capacity to provide power to a 24VDC smoke detector and a 24VDC hydrogen detector through fused power supply terminals. For proper power and alarm wiring, review the provided wiring diagrams (see Figure 1.5 below and Figure 1.6 on page 12). There are factory-installed jumpers across terminals #7 and #8 (smoke detector) and #4 and #5 (hydrogen detector). Remove the factory-installed jumpers before connecting the smoke and hydrogen detectors.

Please note that the provided smoke detector (and hydrogen detector, if applicable) has external testing buttons to artificially (and temporarily) create an alarm sequence. Additionally, should the desired NC contact closure need to be changed to the alternative contact closure, refer to the Service section of this manual to reprogram the control.

The generator run alarm (if desired) will be signaled through an existing (or field provided) relay attached to the site generator. The signal from the controller will route through a set of normally closed contacts. Should the generator start, the contacts will open, triggering the alarm and initiating "Generator Run Mode" (both compressors cannot operate concurrently). Since some sites do not have a generator present, there is a factory-installed jumper across terminals #9 and #10. If there is no generator, no action is necessary. If generator run alarm is desired, please remove the factory-installed jumper and wire per Figure 1.7 on page 12.

FIGURE 1.5
Power and Signal Connections for Smoke Detector

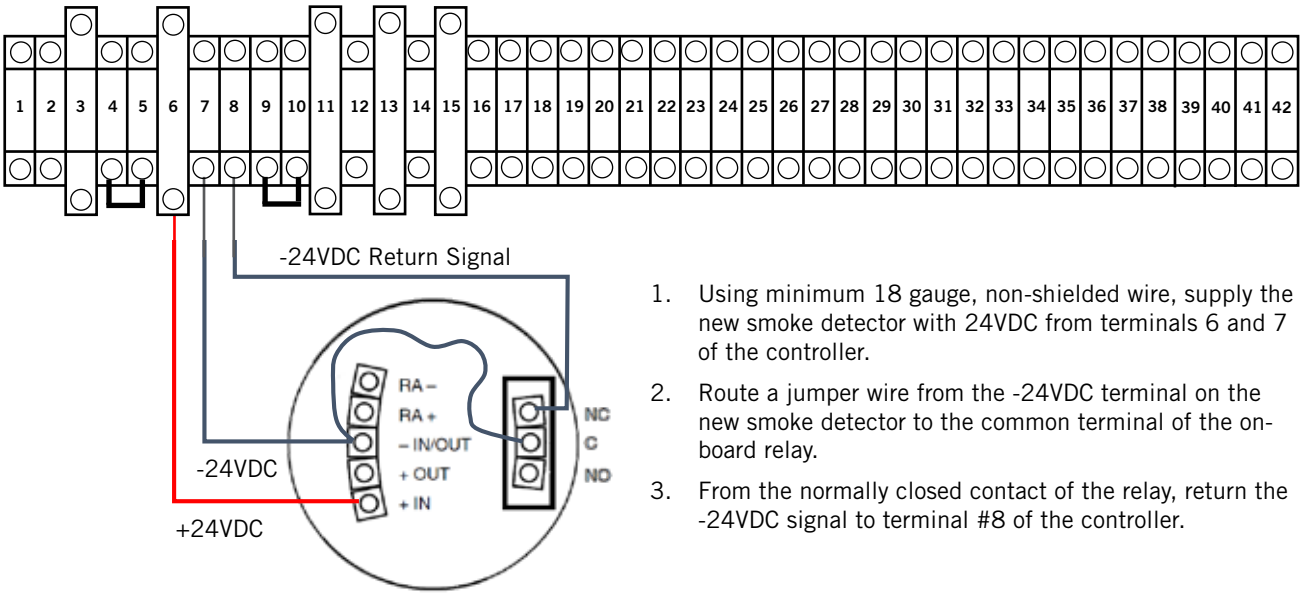

1. Using minimum 18 gauge, non-shielded wire, supply the new smoke detector with 24VDC from terminals 6 and 7 of the controller.
2. Route a jumper wire from the -24VDC terminal on the new smoke detector to the common terminal of the on-board relay.
3. From the normally closed contact of the relay, return the -24VDC signal to terminal #8 of the controller.

FIGURE 1.6
Power and Signal Connections for Bard-Supplied Hydrogen Detector (If Applicable)

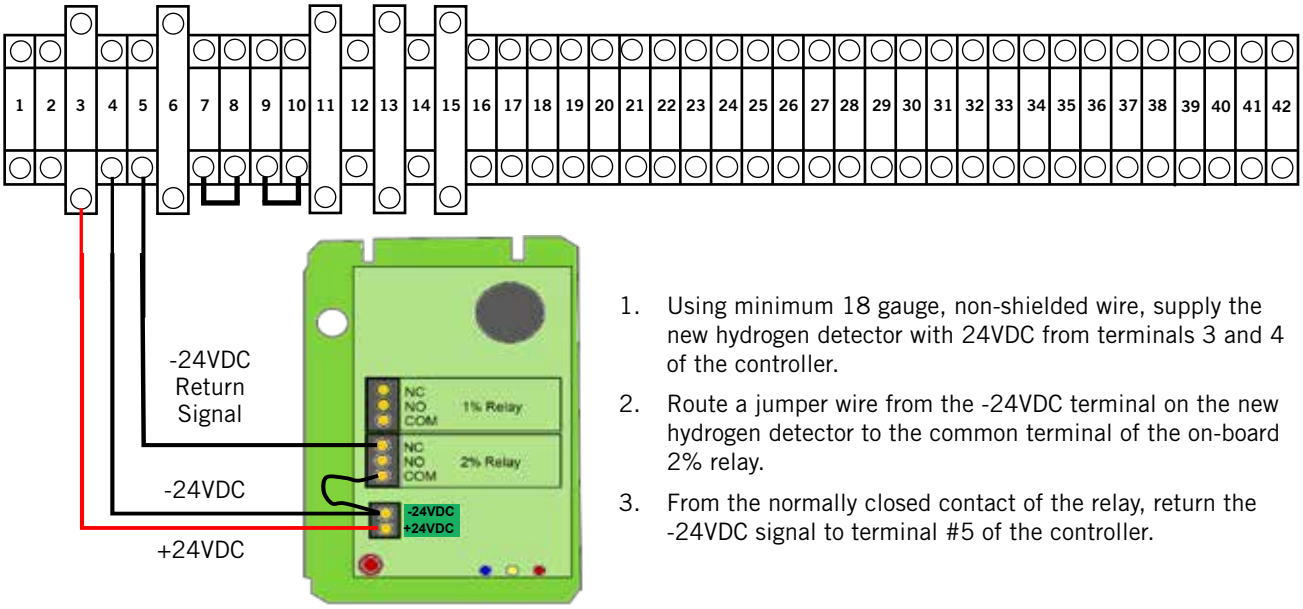

1. Using minimum 18 gauge, non-shielded wire, supply the new hydrogen detector with 24VDC from terminals 3 and 4 of the controller.
2. Route a jumper wire from the -24VDC terminal on the new hydrogen detector to the common terminal of the on-board 2% relay.
3. From the normally closed contact of the relay, return the -24VDC signal to terminal #5 of the controller.

FIGURE 1.7
LC1000-300 and LC1500-300 Series Generator Run

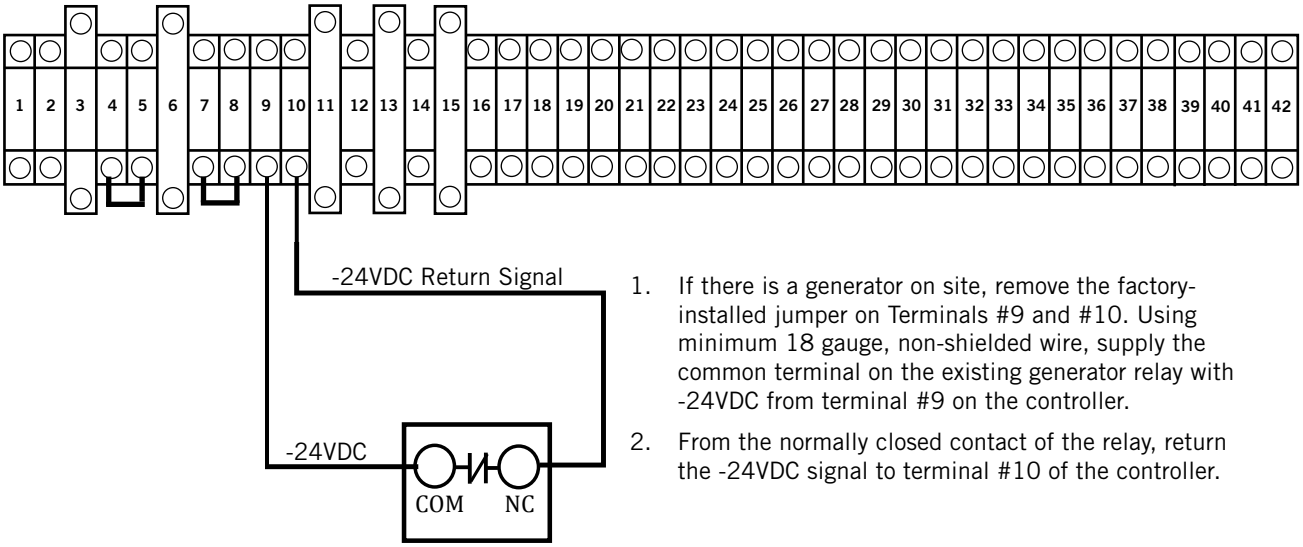

1. If there is a generator on site, remove the factory-installed jumper on Terminals #9 and #10. Using minimum 18 gauge, non-shielded wire, supply the common terminal on the existing generator relay with -24VDC from terminal #9 on the controller.
2. From the normally closed contact of the relay, return the -24VDC signal to terminal #10 of the controller.

4. Connecting External Alarm Points

Both the LC1000-300 and LC1500-300 controls have the capability to provide NC contacts for the following ten (10) alarms:

- Smoke
- Hydrogen
- Generator
- Lag Unit Run
- High Temp*
- Low Temp*
- HVAC 1 Fail
- HVAC 2 Fail
- High Indoor Humidity
- Commercial Power Loss

Before connecting the external alarm wiring, identify the model of the controller (see label inside of controller door). The LC1000-300 provides contacts for alarms at the internal terminal block (see Figure 1.8).

The LC1500-300 control has a pre-installed, pre-wired 66 punch-down block to allow easy connection to these contacts outside of the controller box (see Figure 1.9 on page 14).

FIGURE 1.8
LC1000-300 External Alarm Wiring

On the terminal strip of the LC1000-300 controller, there are ten (10) separate series of normally closed dry contacts for the following alarm scenarios...

- Smoke
- Hydrogen
- Generator
- Lag Unit Run
- High Temp*
- Low Temp*
- HVAC 1 Fail
- HVAC 2 Fail
- High Indoor Humidity
- Commercial Power Loss

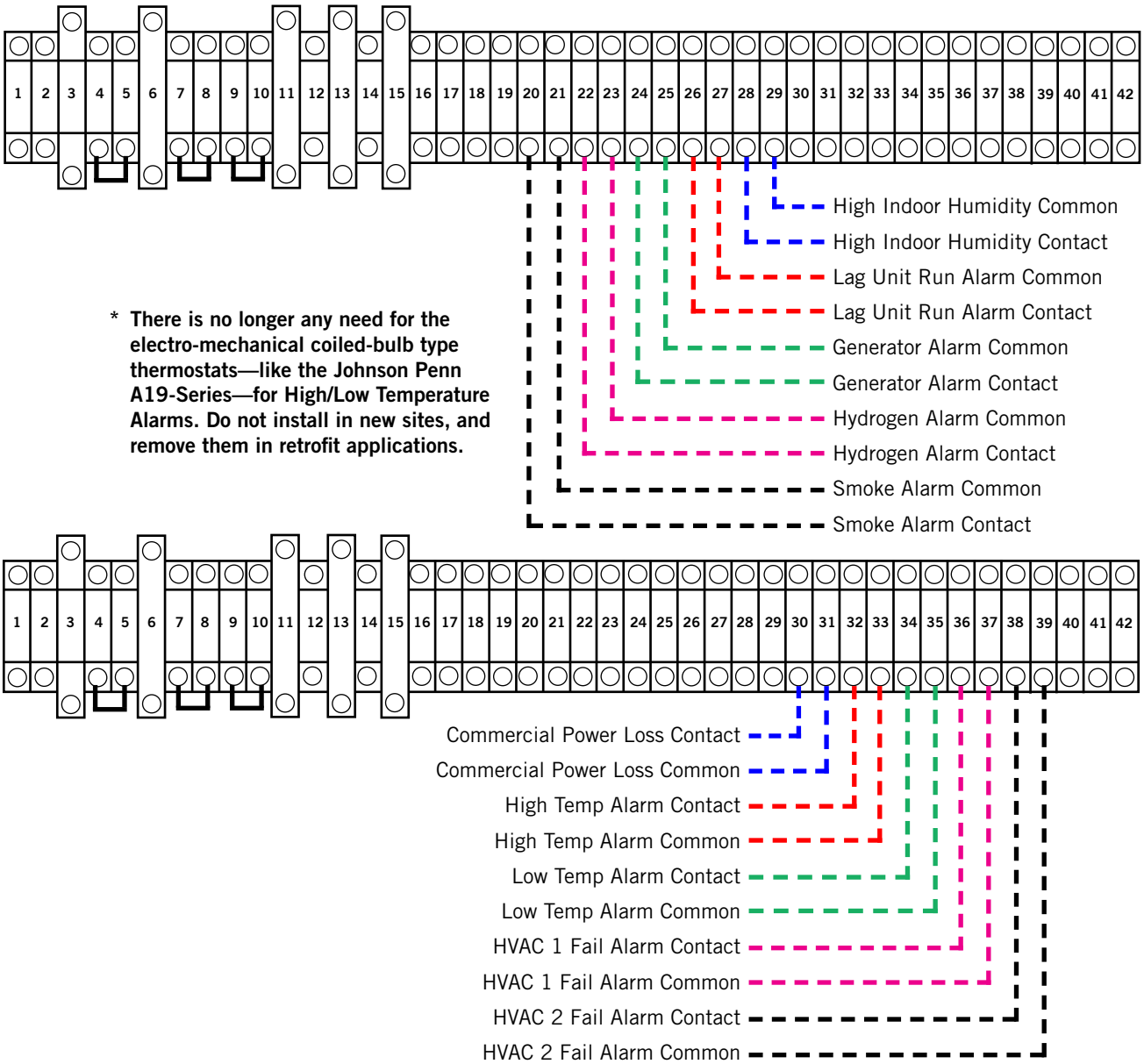

FIGURE 1.9
LC1500-300 External Alarm Wiring

Before connecting the external alarm wiring, identify the model of the controller (see label on inside of controller door. The connections described below are for the LC1500-300 controller only.

The LC1500-300 has the same ten (10) separate series of normally closed dry contacts as the LC1000-300, but has a prewired 66 punch-down block to make external connections easier.

- Smoke
- Hydrogen
- Generator
- Lag Unit Run
- High Temp*
- Low Temp*
- HVAC 1 Fail
- HVAC 2 Fail
- High Indoor Humidity
- Commercial Power Loss

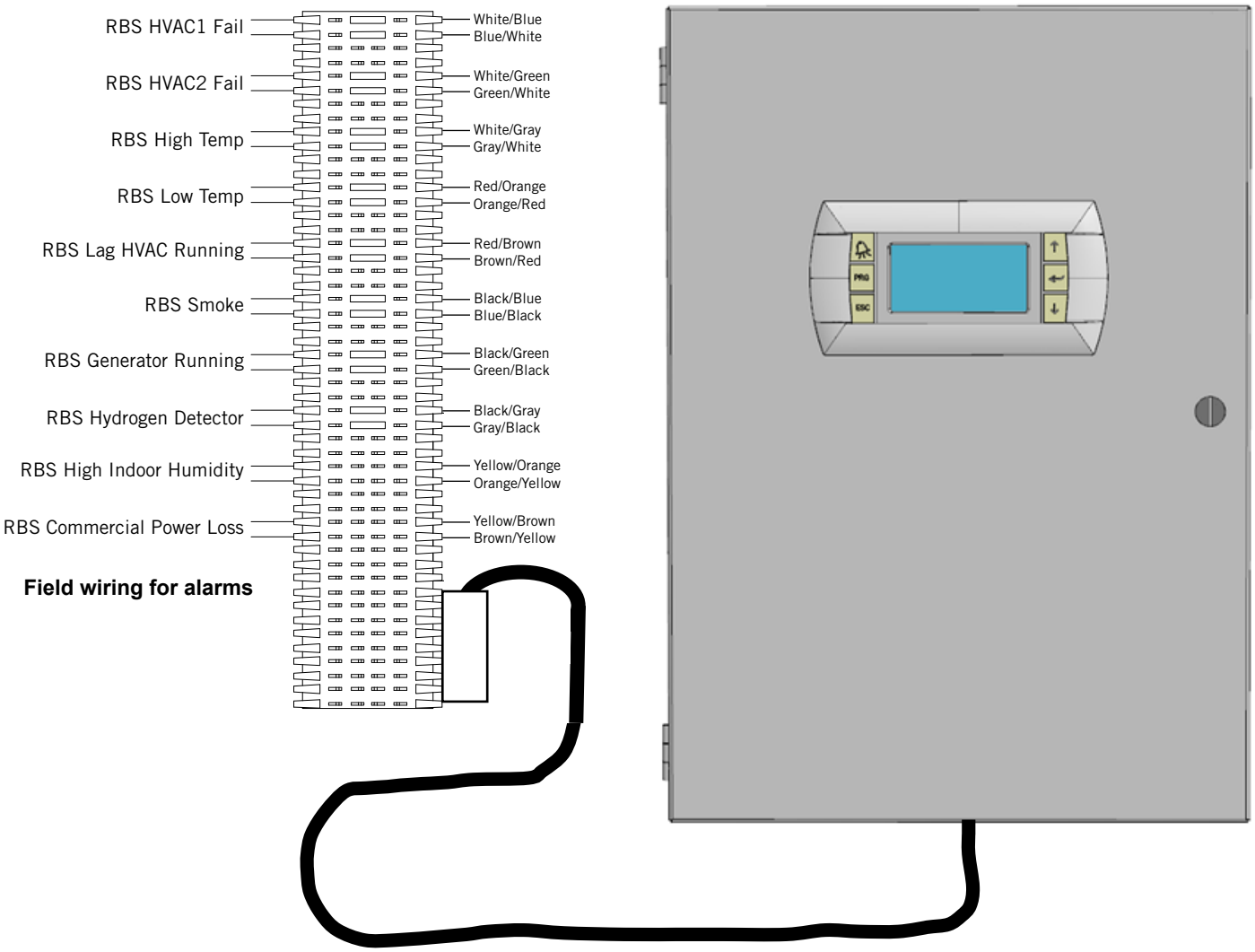

48” umbilical cord allows for mounting the 66 punch-down block to either side, top or bottom of controller box.

Bridge clips have been inserted for convenience.

* **There is no longer any need for the electro-mechanical coiled-bulb type thermostats—like the Johnson Penn A19-Series—for High/Low Temperature Alarms. Do not install in new sites, and remove them in retrofit applications.**

5. Communication Wiring

Connect the communication wiring from the two wall-mount units to the controller as shown in Figures 1.10 or 1.11. The communication wire should be 2-wire, 18 gauge shielded cable with drain. Be sure to match "+" and "-" symbols on controller terminal blocks to prewired unit control terminal block (see Figures 1.13 and 1.14 on pages 17 and 18). Attach communication wire filters as shown below and in Figure 1.12 on page 16. **Use separate conduits for communication and supply wiring.**

FIGURE 1.10
Communication Wiring (Daisy Chain Method)

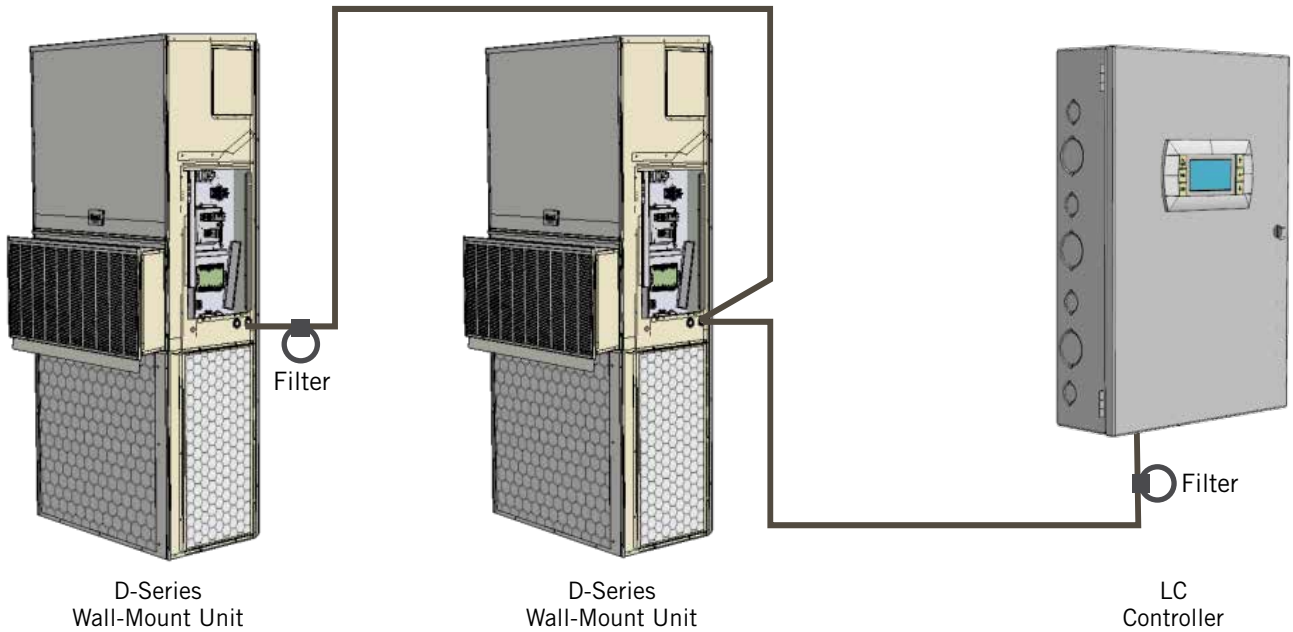

In addition to the "daisy chain" method of connecting the communication wiring shown in Figure 1.10, the two wall-mount units can also be connected in the manner shown in Figure 1.11. If connecting the two wall-units this way, be sure to place the communication wire filters in the positions shown in Figure 1.11. For more information on attaching the communication wire filters at the wall-mount units, see page 18.

FIGURE 1.11
Communication Wiring (Alternate Method)

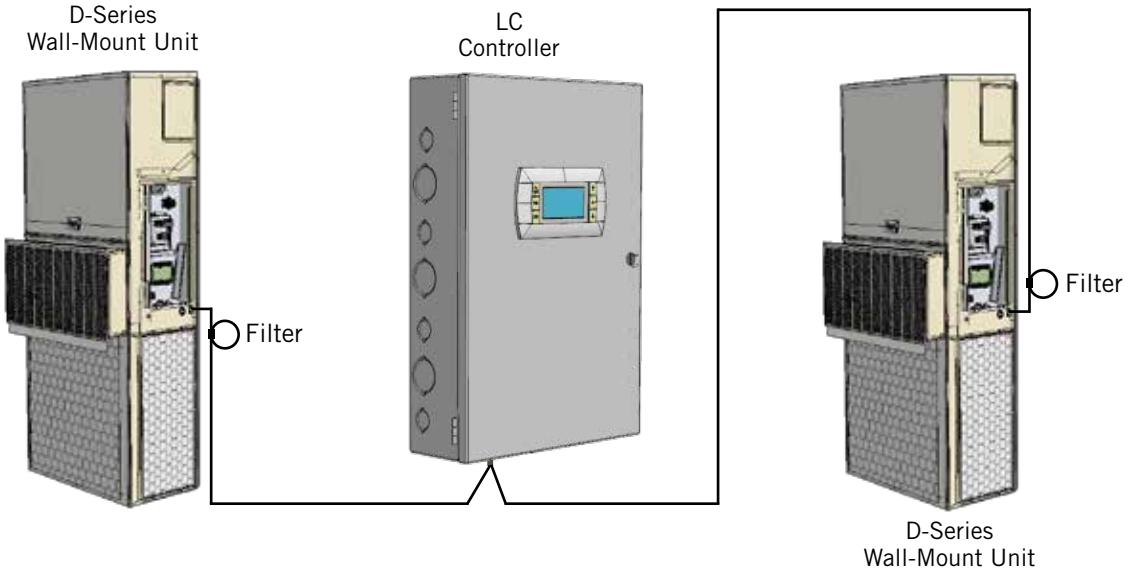

The steps outlined on the following pages show how to connect the communication wiring using the daisy chain method shown in Figure 1.10. If using the alternate method shown in Figure 1.11, the connections to the controller and each wall-mount unit will be the same but the filters need to be placed in the positions shown in Figure 1.11.

FIGURE 1.12
Communication Wiring: Termination at the Controller

1. Using the field-provided shielded cable, make a small service loop after entering the controller and attach the provided EMI filter at the intersection of the loop.

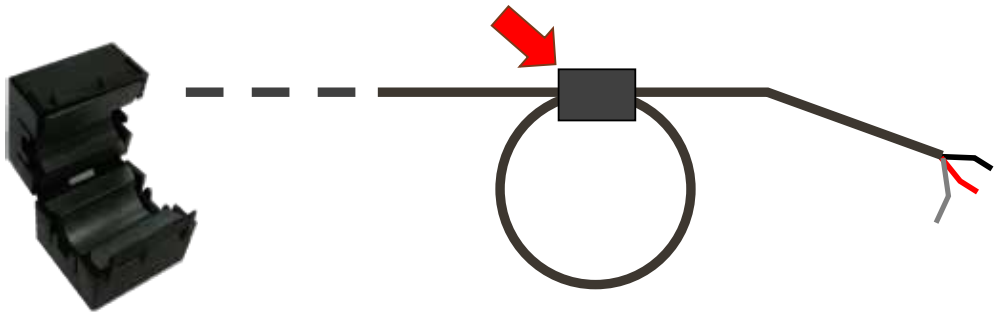

2. Connect one wire to terminal #40 (negative), the other wire to terminal #41 (positive) and the drain wire to ground terminal #42.

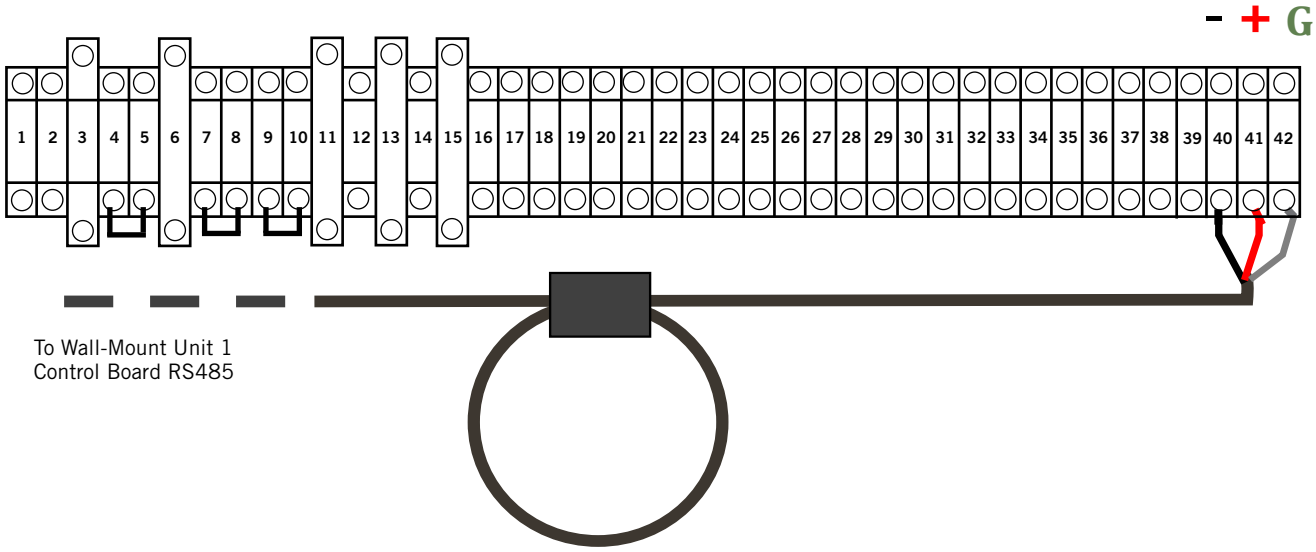

FIGURE 1.13
Communication Wiring: Termination at the First Wall-Mount Unit

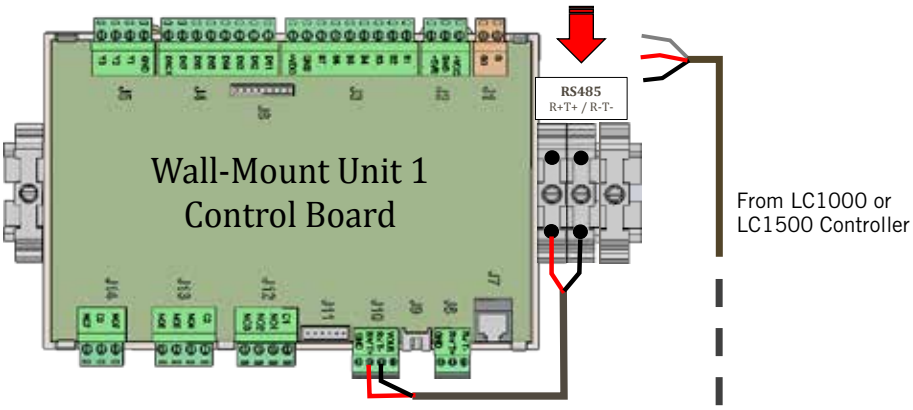

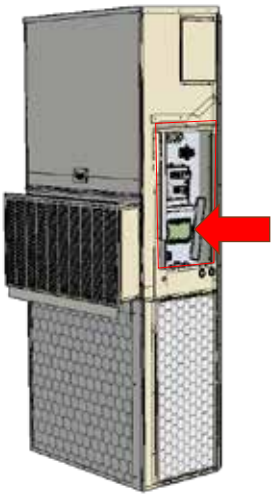

1. From the controller, extend the shielded cable through a separate conduit and route to the provided terminal block next to the wall-mount control board.

   Note that the terminal block label is clearly marked “+” and “-”. These connections are polarity-sensitive. Two-wire communication from control board is prewired to terminal block. Make sure to match "+" and "-" symbols on controller terminal blocks.

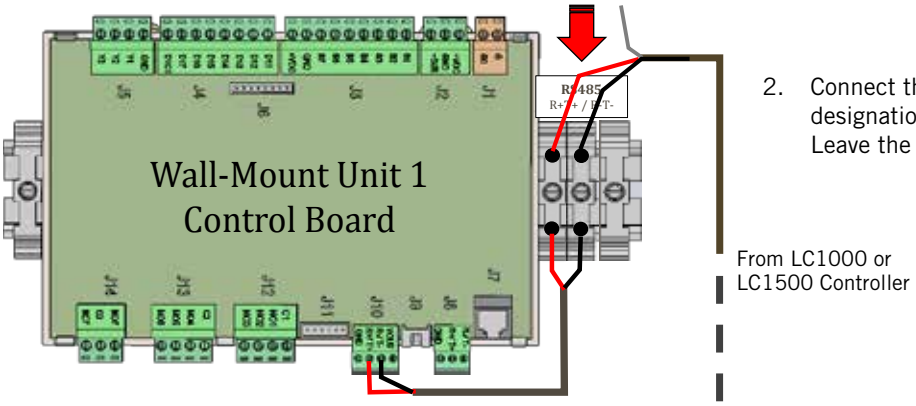

2. Connect the wires matching the terminal designations (+/-) of the controller terminals. Leave the drain wire loose.

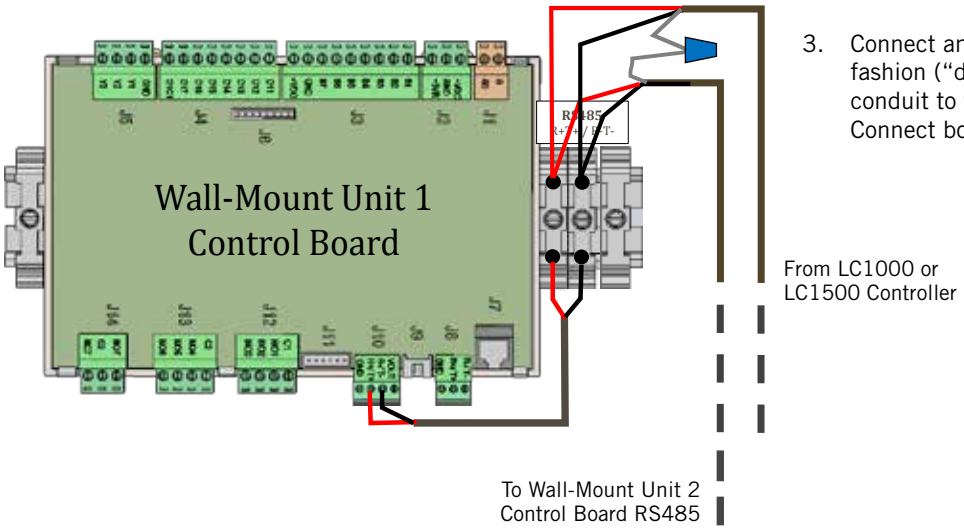

3. Connect another cable in a similar fashion (“daisy chain”) to route in conduit to the second wall-mount unit. Connect both drain wires with wire nut.

FIGURE 1.14
Communication Wiring: Termination at the Second Wall-Mount Unit

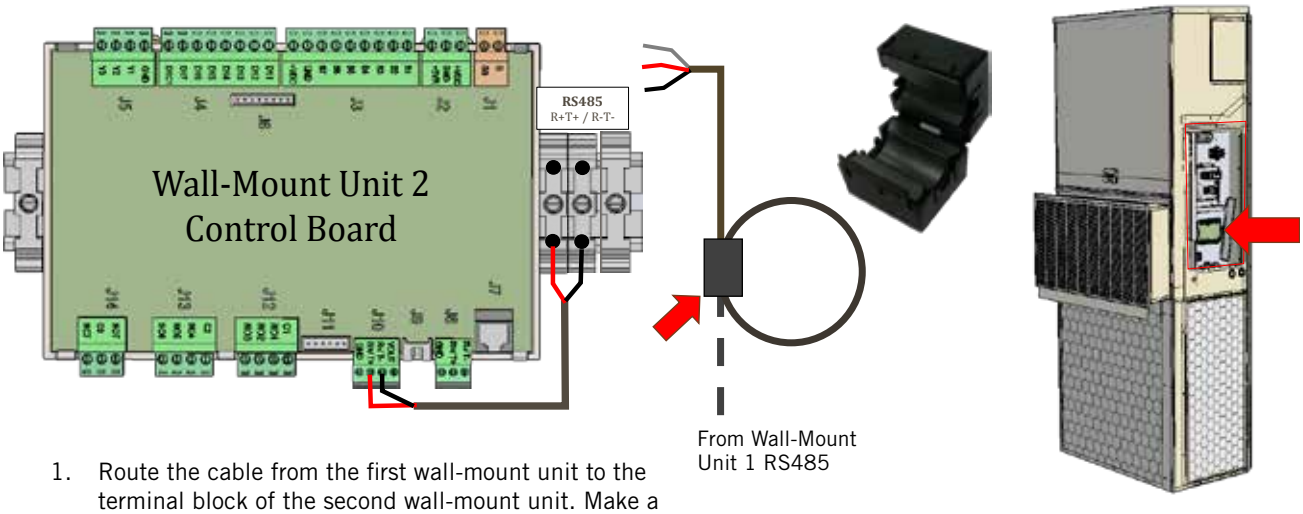

1. Route the cable from the first wall-mount unit to the terminal block of the second wall-mount unit. Make a small service loop and attach EMI filter as shown.

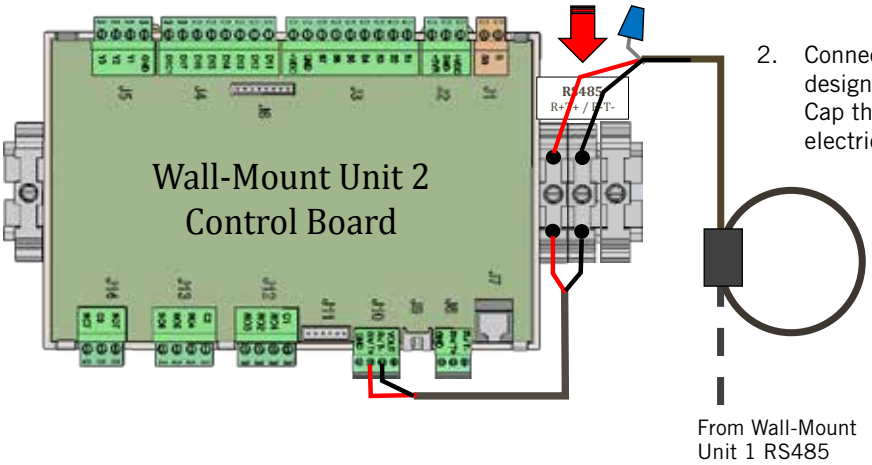

2. Connect the wires matching the terminal designations (+/-) of the controller terminals. Cap the loose drain with a wire nut or electrical tape.

6. Supply Wiring

The LC1000/1500 controller is powered by -48VDC from the shelter. A field-supplied 5 amp DC circuit breaker is required. Field-supplied supply wiring should be minimum 16 guage, maximum 14 guage (see Figure 1.15). A reliable earth ground must be connected in addition to any grounding from conduit. Grounding posts are included with the controller for this purpose; install as shown in Figure 1.16. **Failing to ground the controller box properly could result in damage to the equipment.**

FIGURE 1.15
LC1000-300/LC1500-300 Controller Supply Wiring

The controller requires a separate -48VDC power supply, an additional 5-amp DC breaker (field supplied) and minimum 16 gauge supply wire.

-48VDC termination at controller: Bring the -48VDC power supply wires through conduit to the controller box. Land the positive (+) 48VDC wire to terminal #1 and the negative (-) 48VDC wire to terminal #2.

NOTE: *If the DC wiring is not terminated correctly on the specific polarity-indicated terminals of the block, the controller will not activate and will not function. Verify polarity of connections and wait to initialize controller until "startup procedures."*

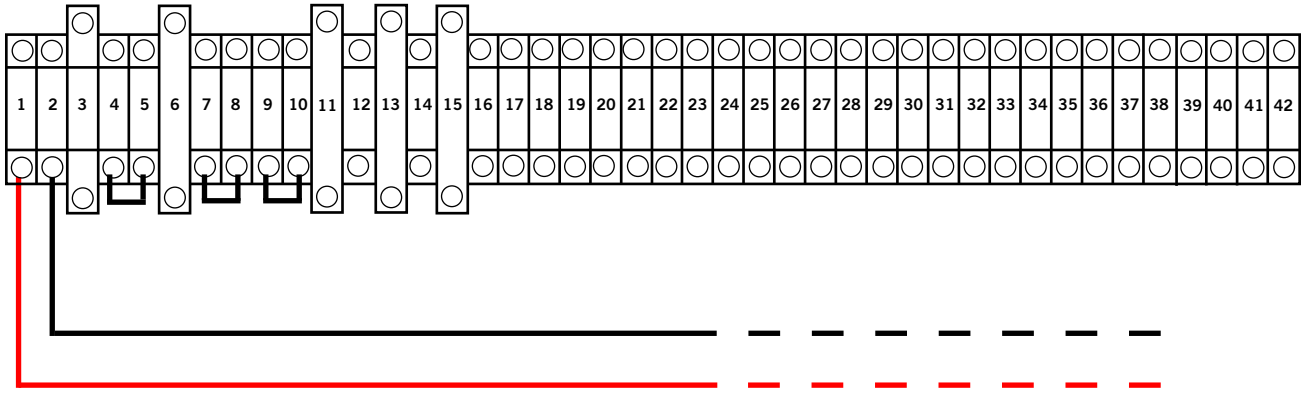

FIGURE 1.16
Controller Grounding Posts

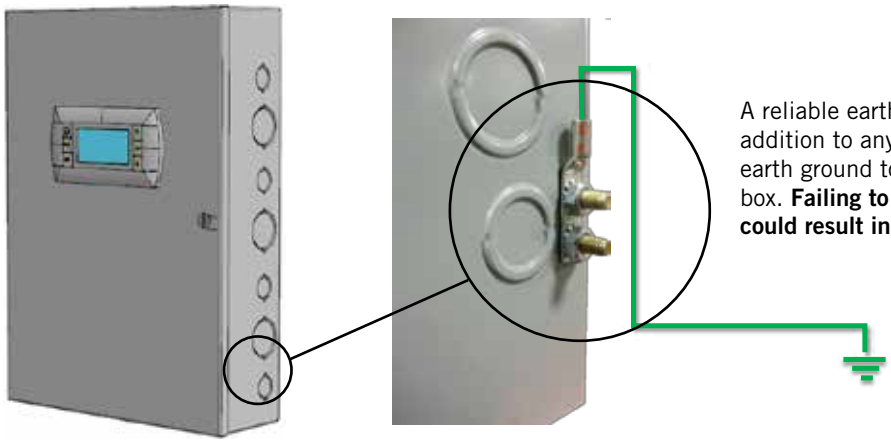

A reliable earth ground must be connected in addition to any grounding from conduit. Attach earth ground to dedicated lugs on side of controller box. **Failing to ground the controller box properly could result in damage to the equipment.**

TABLE 1.2
Terminal Block Index

TB#	Wire Mark	Description	NO	NC
1	48+	48+ VDC Input		
2	48-	48- VDC Input		
3	24+	24+VDC Input – Hydrogen		
4	24-	24-VDC Input – Hydrogen		
5	HA2	HA2 – Hydrogen ALR Signal Return		
6	24+	24+ VDC Input – Smoke		
7	24-	24- VDC Input – Smoke		
8	SA2	SA2 – Smoke ALR Signal Return		
9	24-	24- VDC		
10	GA2	GA2 – Generator ALR Signal Return		
11	B1	Indoor Remote Sensor		
12	GND	GND		
13	B2	Spare Remote Sensor 1		
14	GND	GND		
15	B3	Spare Remote Sensor 2		
16	GND	GND		
17	+VDC	Power for B5 +(G)		
18	B5	Humidity Sensor (OUTH)		
19	GND	GND M(GO)		
20	S24	Smoke ALR Relay Contact		
21	S21	Smoke ALR Relay Contact Common		
22	H24	Hydrogen ALR Relay Contact		
23	H21	Hydrogen ALR Relay Contact Common		
24	G24	Generator ALR Relay Contact		
25	G21	Generator ALR Relay Contact Common		
26	NO1	Lag Unit Run Relay Contact		
27	C1	Lag Unit Run Relay Contact Common		
28	NO2	High Indoor Humidity Relay Contact		
29	C1	High Indoor Humidity Relay Contact Common		
30	NO3	Commercial Power Loss Relay Contact		
31	C1	Commercial Power Loss Relay Contact Common		
32	NO4	High Temp ALR Relay Contact		
33	C2	High Temp ALR Relay Contact Common		
34	NO5	Low Temp ALR Relay Contact		
35	C2	Low Temp ALR Relay Contact Common		
36	NO6	HVAC1 Fail ALR Relay Contact		
37	C2	HVAC1 Fail ALR Relay Contact Common		
38	NO7	HVAC2 Fail ALR Relay Contact		
39	C3	HVAC2 Fail ALR Relay Contact Common		
40	R-	RS485 RX-/TX-		
41	R+	RS485 RX+/TX+		
42	GND	Drain Shield Grounding Wire		

FIGURE 1.17
LC1000-300/LC1500-300 Wiring Diagram

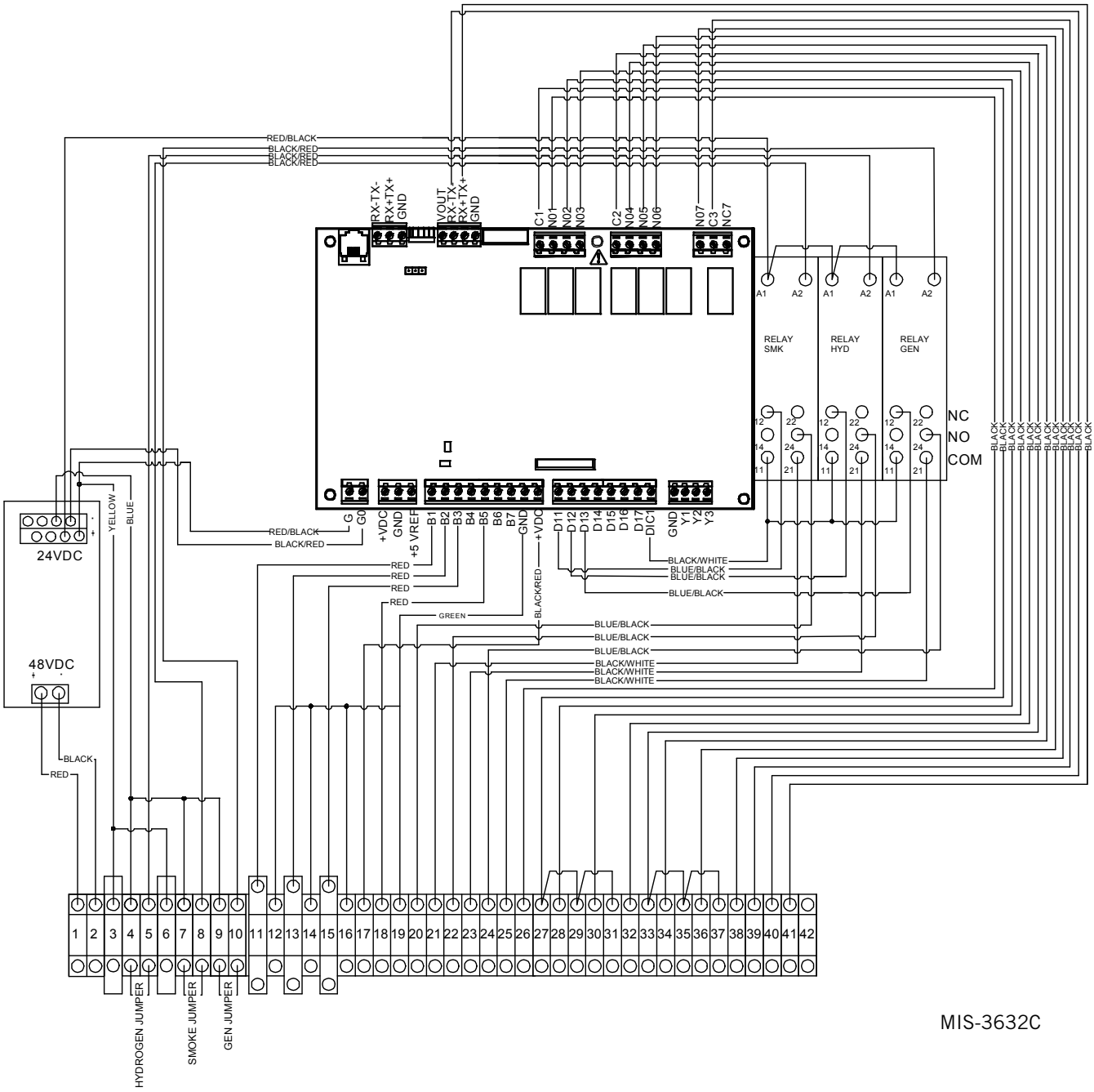

FIGURE 1.18
LC1500-300 Punch-Down Block Wiring

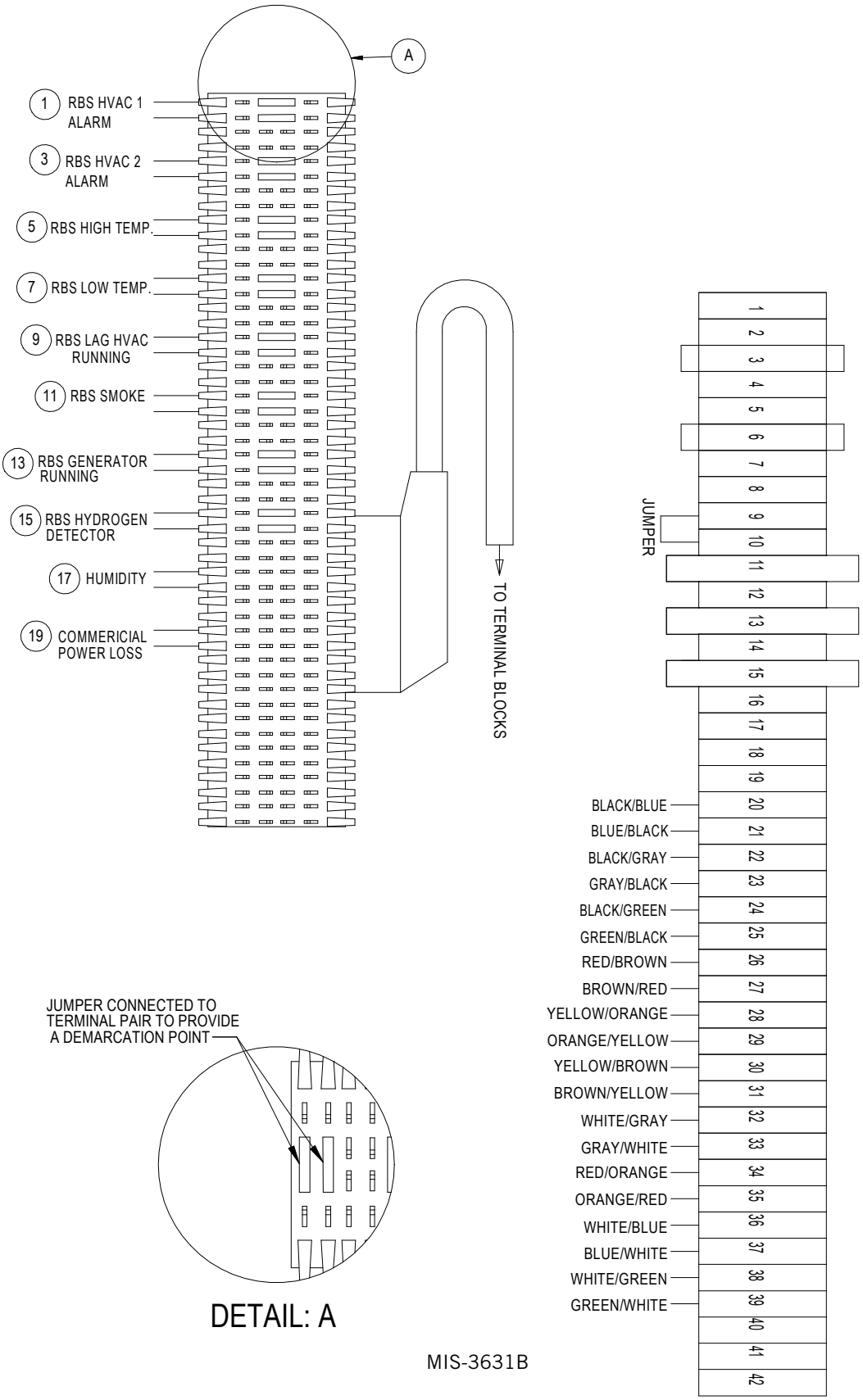

For shelter applications involving only a single DUAL-TEC™ DC Free Cooling Unit, see page 25.

The LC1000/1500 controller and TEC-EYE™ hand-held diagnostic tool (see Figure 1.19) will both be used to set up the controller and wall-mount units. The TEC-EYE™ diagnostic tool is shipped inside the controller.

1. Set Controller Date and Time

1) Shut down all breakers to system, both wall-mount units and the controller.
2) Restore power (both AC and DC) to the two wall-mount units.
3) Turn on power to the controller. There is a 40-second delay prior to any function (other than display backlight) becoming active. The Status screen is the default screen when the controller has power.
4) Access Main Menu by pressing the Menu key.
5) Press the UP or DOWN keys to scroll to the Clock/Scheduler menu. Press the ENTER key (see Figure 1.20 on page 24).
6) Move the cursor to the Date line by pressing the ENTER key. Press the UP or DOWN keys to change the date. The Day line will automatically change when the date has been altered.
7) Press the ENTER key to move to the Hour line. Press the UP or DOWN keys to change the time. Press the ENTER key to set the time.
8) Press the ESCAPE key several times to return to the Status menu.

FIGURE 1.19
LC1000/1500 Controller and TEC-EYE™ DIsplay

ALARM KEY
Allows viewing of active alarms
Silences audible alarms
Resets active alarms

MENU KEY
Allows entry to Main Menu

ESCAPE KEY
Returns to previous menu level
Cancels a changed entry

UP KEY
Steps to next screen in the display menu
Changes (increases) the value of a modifiable field

ENTER KEY
Accepts current value of a modifiable field
Advances cursor

DOWN KEY
Steps back to previous screen in the display menu
Changes (decreases) the value of a modifiable field

FIGURE 1.20
Clock/Scheduler Menu

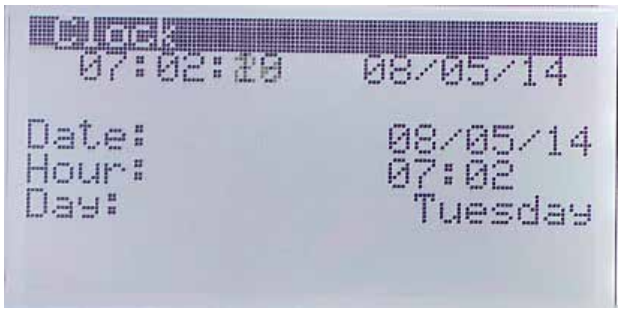

2. Verify Communication to Units

The controller and both wall-mount units should have the communication wiring installed correctly and be powered up at the same time. Each wall-mount unit is shipped with the address set to 10. During the power-up sequence, the controller will randomly assign each of the units an address of 1 or 2. When Auto Address is complete, one of the units will be addressed 1 and the other 2. Check controller display to see that both units are "ON-LINE" (see Figure 1.21). This typically takes 2 minutes once controller is powered.

FIGURE 1.21
Status Display Showing Units "Online"

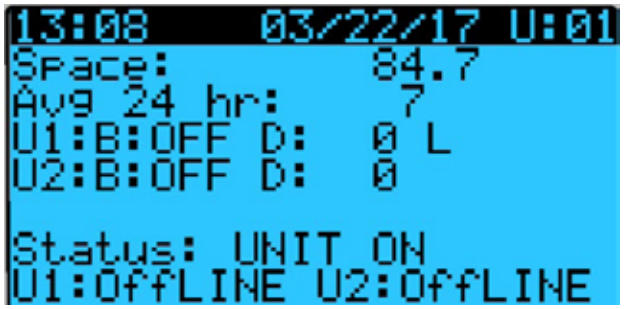

To verify unit address, connect the TEC-EYE™ hand-held diagnostic tool to the unit and press the Menu key. Use the UP and DOWN keys to scroll to the Setpoints menu. Press ENTER key and then use the UP and DOWN keys to scroll to Fieldbus Address. This value will display the wall-mount unit's current address value. ***NOTE:*** *This value can be changed if there was an error with the Auto Address sequence or the user would like to manually set the address of a unit.*

3. Conduct Run Test

Execute a run test on each unit to verify the equipment is functioning correctly.

On the controller, navigate to the Run Test screen (see Figure 1.22).

FIGURE 1.22
Executing Run Test

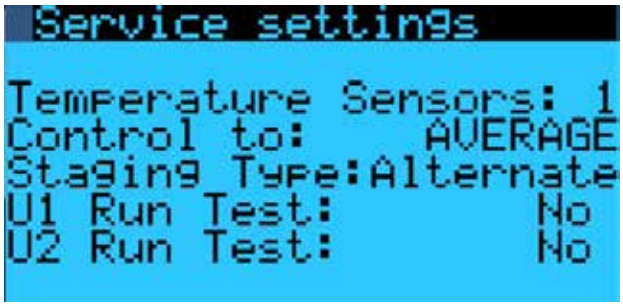

1) From the Main Menu screen, press the UP or DOWN key to get to Technician menu. Press ENTER key. (If not already on Main Menu screen, press MENU key to get to Main Menu.)
2) Use UP or DOWN key to get to Service menu. Press ENTER key.
3) Use UP or DOWN key to get to Control menu. Press ENTER key.
4) Cursor will be flashing in upper left corner of screen. Press ENTER key to scroll to U1 Run Test.
5) Press UP key to change 'No" on screen to "Yes". Unit 1 will begin the run test.

   NOTE: *While initiating the run test on each unit, use this opportunity to physically label each system as "Unit 1" or "Unit 2."*
6) After the Unit 1 run test ends, press ENTER key to scroll to U2 Run Test.
7) Press UP key to change 'No" on screen to "Yes". Unit 2 will begin the run test.

Run Test Approximate Timings (in Minutes)

Blower	On: 0:00
Damper	Open: 0:00 – 2:40
	Closed: 2:41 – 4:57
Compressor	On: 4:58
	Off: 6:00
Heat	On: 6:01
	Off: 7:10
Blower	Off: 8:19

4. Completing Installation

Once all the installation steps have been completed, and system verification and run test results were satisfactory, the installation can now be considered "complete." The controller has been pre-programmed with what is widely considered to be the most efficient operating parameters—see Table 1.3. Further information on exact sequence of operation and advanced programming changes can be found in the Service section of this manual.

TABLE 1.3
Controller Default Settings

Description	Default Setpoint
Temperature at local remote (main) sensor	--
Temperature Setpoint	77°F
Heating Setpoint	50°F
Temperature High Limit – Level 1	95°F
Temperature High Limit – Level 2 (High Temp Alarm)	98°F
Temperature Low Limit	45°F
Comfort Mode Setpoint	77°F
Comfort Mode Operation Time	60 Minutes
DC Freecooling Setpoint	55°F
Lead/Lag Changeover Time (Rotation)	1
Temperature Units	°F

Cool Weather Operation (Free Cooling Available):

Stage 1 Cooling	88°F – Lead unit free-cooling damper opens
Stage 2 Cooling	90°F – Lag unit free-cooling damper opens
Stage 3 Cooling	92°F – Lead unit compressor, damper will stay open if conditions are conducive for free cooling
Stage 4 Cooling	93°F – Lag unit compressor, damper will stay open if conditions are conducive for free cooling
Hi-Temp Alarm #1	95°F
Hi-Temp Alarm #2	98°F – Emergency ventilation initiates, both dampers open, both blowers run
	74°F – All cooling stops, blowers stop
Stage 1 Heating	48°F – Lead unit heat strip activates
Stage 2 Heating	46°F – Lag unit heat strip activates
Low-Temp Alarm	45°F
	50°F – All heating stops, blowers stop

Warm Weather Operation (No Free Cooling Available):

Stage 1 Cooling	88°F – Lead unit compressor)
Stage 2 Cooling	90°F – Lag unit compressor
Hi-Temp Alarm #1	95°F
Hi-Temp Alarm #2	98°F – Emergency ventilation initiates, both dampers open, both blowers run
	74°F – All cooling stops, blowers stop

BARD-LINK™ WEB CARD COMMUNICATION BOARD

NOTE: *A web card communications board allows remote access, via Ethernet, to all functions of the controller system. This is the same as if one was in the building where the controller system is physically installed.*

Connect the LC1000 or LC1500 controller Ethernet port to the existing Ethernet card in the shelter (if applicable) using CAT 6 Ethernet cable.

TEC-EYE™ HAND-HELD DIAGNOSTIC TOOL

The TEC-EYE™ hand-held diagnostic tool is included with each controller and will be very valuable to technicians performing maintenance or repair procedures.. Before leaving the jobsite, make sure to store the TEC-EYE™ inside the shelter, preferably close to the controller. The TEC-EYE™ has integrated magnets on the back of the tool, so it can even be attached to the front, sides, bottom, or top of the control box. Do not let the TEC-EYE™ leave the shelter.

SINGLE HVAC UNIT SHELTERS ONLY

In certain applications, only one wall-mount unit will be installed on a particular shelter. This may be desirable due to space considerations, load specifics or other non-typical situations. If only one Dual-Tec™ unit will be connected to the controller, please follow the steps below to allow operation without nuisance alarms.

1. Go to the Setpoints menu on controller; press ENTER key.
2. Press DOWN key seven (7) times to reach "Number of Units" screen. Press ENTER key to cause cursor to flash.
3. Press DOWN key to change value to "1".
4. Cycle power to the controller.

SPECIAL OPERATIONAL FORMAT: COASTAL MODE

In certain locations (geographical or situational), outdoor air used for “free cooling” can be corrosive or have other non-desirable qualities. Although the DC Free Cooling Unit system was meant to take full advantage of outdoor air cooling, Bard Manufacturing has included a special operations format within the programming that will not allow any damper activity

for “free cooling”. By enabling the “Coastal Mode” function, the DC Free Cooling Unit system will only cool through mechanical (compressor) means. However, the damper will still open under emergency conditions (high temperature #2 alarm or hydrogen alarm, if installed) to flood the room with outdoor air, and the damper will allow for “free cooling” under a power loss situation when the compressor cannot function.

This mode is **set by the model and serial number**—completely automatic—and cannot be overridden locally.

SECTION 2:

SERVICE INSTRUCTIONS

LC SERIES CONTROLLER SEQUENCE OF OPERATION

Overview

The LC Series controller is designed to operate two (2) Bard D-Series wall-mount units in a lead/lag fashion, while offering extensive alarming capabilities as well as remote communication. Inside the LC1000-300 cabinet, there is a control board, a 48VDC to 24VDC converter/power source, three (3) isolation relays (to protect against errant voltages) and a terminal block. The LC1500-300 series has an additional factory-wired 66 connection block for ease in connecting external alarms. The duty of the controller is to monitor temperature and alarm conditions within the shelter and to send cooling or heating orders to one, or both, wall-mount units. The controller also monitors the units and sends alarms.

Inputs/Outputs

The LC controller will make decisions and trigger alarms by the use of inputs and outputs to various field-installed connections to the terminal block. Please refer to the Installation section of this manual for further information on field-wire connections.

Power Inputs:

- -48VDC positive-ground power to terminals 1 (+) and 2 (-). This feeds the 48VDC to 24VDC power converter, which then powers the board and Bard-supplied hydrogen and smoke detectors. ***NOTE: Output must be minimum 22.8 VDC to allow proper board operation.***

Power Outputs:

- 24VDC power to Bard-supplied hydrogen detector through terminals 3 (+) and 4 (-). The + terminal block is fused internally (see Componentry section).
- 24VDC power to smoke detector through terminals 6 (+) and 7 (-). The + terminal block is fused internally (see Componentry section).
- -24VDC power to generator run relay contacts (if available) on terminal 9.

FIGURE 2.1
LC1000-300/LC1500-300 Controller Control Board and Terminal Block

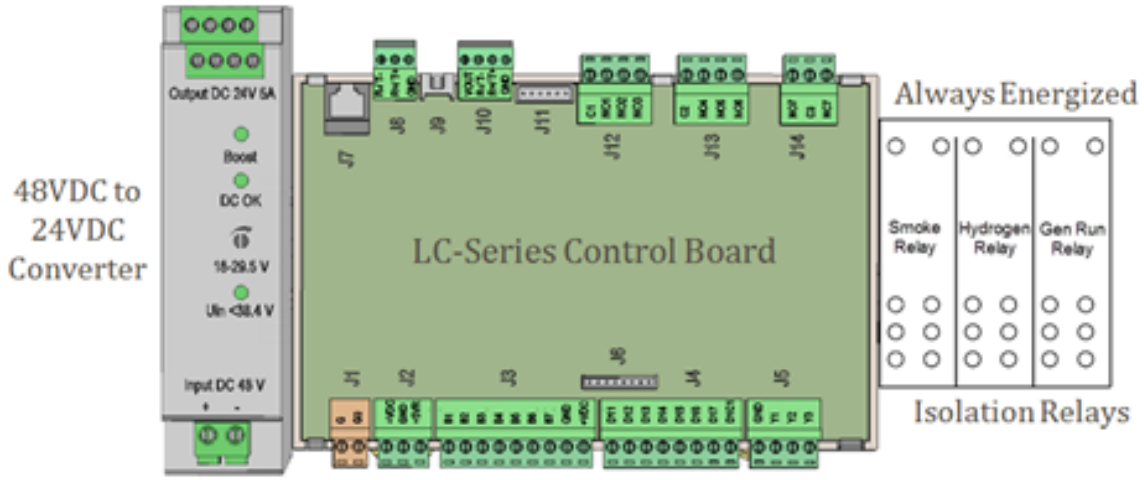

Terminal Block

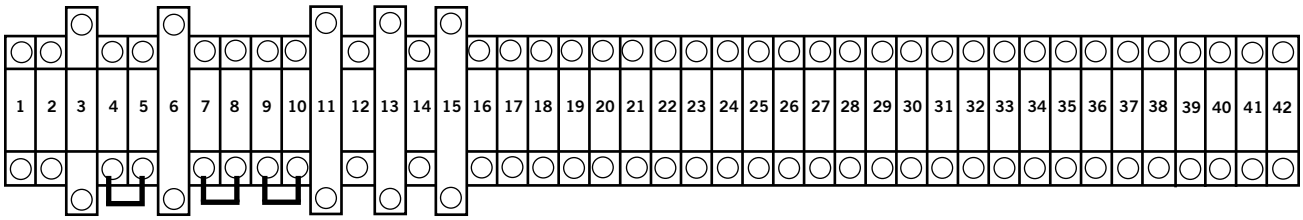

Detector Return Voltages:

- -24VDC signal from hydrogen detector on terminal 5 (always energizes hydrogen alarm isolation relay; de-energizes on alarm).
- -24VDC signal from smoke detector on terminal 8 (always energizes smoke alarm isolation relay; de-energizes on alarm).
- -24VDC signal from generator run contacts on terminal 10 (always energizes generator run alarm isolation relay; de-energizes on alarm).

Signal Inputs:

- 10K ohm remote indoor temperature sensor on terminals 11 and 12.
- 4-20 mA indoor humidity sensor on terminals 17, 18 and 19.
- 10K ohm optional remote indoor temperature sensor on terminals 13 and 14.
- 10K ohm optional remote indoor temperature sensor on terminals 15 and 16.

NC Contacts for External Alarm(s):

- Smoke alarm NC contacts on terminals 20 and 21.
- Hydrogen alarm NC Contacts on terminals 22 and 23.
- Generator run alarm NC contacts on terminals 24 and 25.
- Lag unit run alarm NC contacts on terminals 26 and 27.
- High indoor humidity NC contacts on terminals 28 and 29.
- Commercial power loss NC contacts on terminals 30 and 31.
- High temp fail alarm NC contacts on terminals 32 and 33.
- Low temp fail alarm NC contacts on terminals 34 and 35.
- HVAC 1 contacts on terminals 36 and 37.
- HVAC 2 contacts on terminals 38 and 39.

FIGURE 2.2
LC1000-300/LC1500-300 Controller Control Board

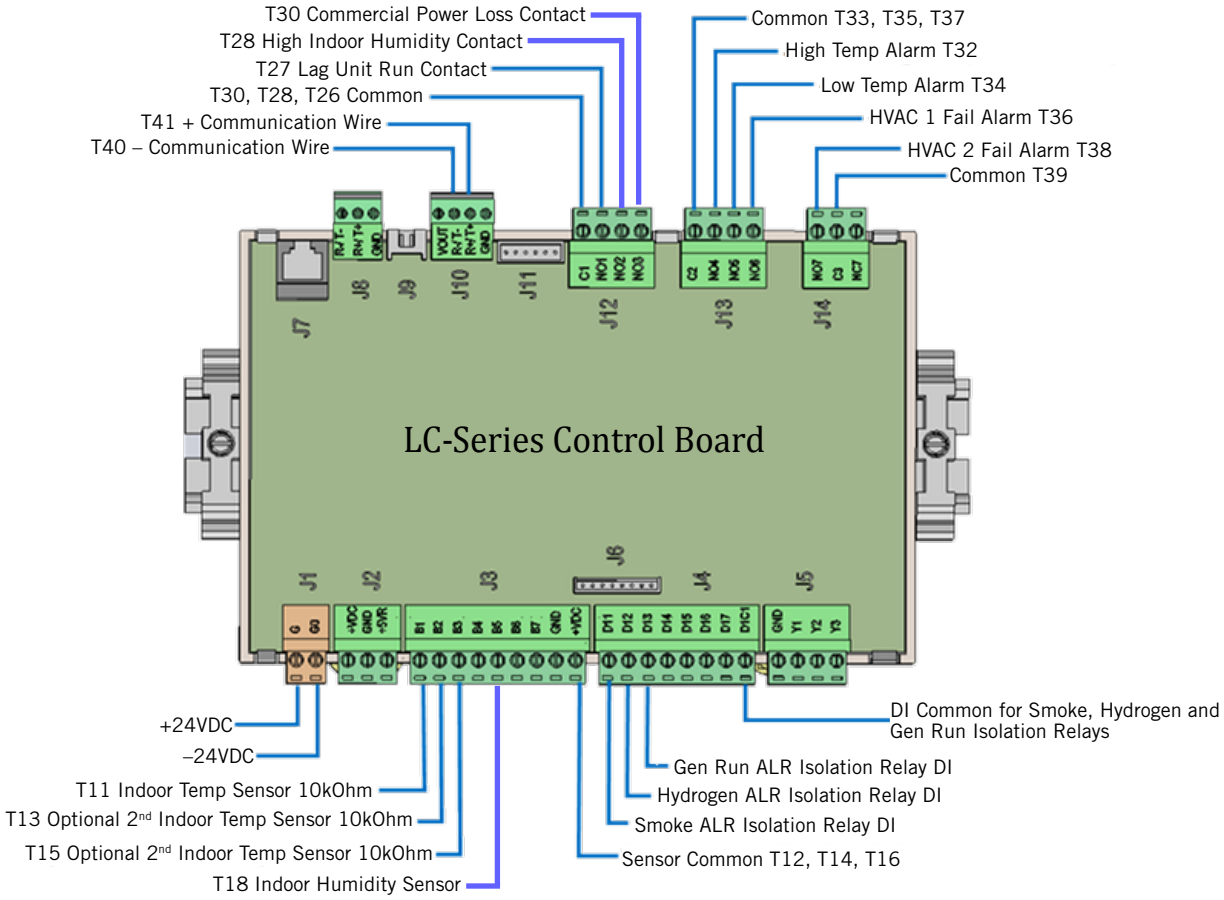

Communication Output:

- Negative (-) communication wire to terminal 40.
- Positive (+) communication wire to terminal 41.
- Cable drain wire to terminal 42.

Isolation Relays and Alarm Schemes

Note that three factory-wired isolation relays (smoke, hydrogen and generator) will always be energized by their respective detectors—with all alarm signals sent through the NO contacts of the relays (which are closed as long as the relays are energized). These contacts open on alarm.

- Smoke: If smoke is detected in the shelter, the detector will open internal contact supplying -24VDC to terminal 8. This will de-energize the smoke isolation relay, which will send digital inputs to the board as well as open terminals 20 and 21. Board will then send remote alarms, and direct both wall-mount units to cease all operations until cleared.
- Hydrogen (if installed): If hydrogen is detected in the shelter, the detector will open internal contact supplying -24VDC to terminal 5. This will de-energize the hydrogen isolation relay, which will send digital inputs to the board as well as open terminals 22 and 23. The LC board will then send remote alarms and direct both wall-mount units to activate free cooling dampers to dilute the shelter with outdoor air until cleared.
- Generator Run: If there is a generator onsite that is not large enough to power both wall-mount units in mechanical cooling, the installers were to pull a factory-installed jumper on terminals 9 and 10 and wire those terminals to the normally closed contacts of an existing or field-provided generator run relay. If this has been done, when the generator activates, the existing or field-provided generator run relay will open contacts and sever the -24VDC to terminal 10. This will de-energize the internal generator run relay, which will send digital inputs to the board as well as open contacts on terminals 24 and 25. The LC board will then send remote alarms and direct only the LEAD unit to operate until cleared. If the factory-mounted jumper has not been removed, generator operation will have no effect on the controller actions.

Board Relays and Alarm Schemes

There are seven alarms handled without the use of external isolation relays. They are board-initiated relays.

- Lag Unit Run: Should temperature rise within the shelter require both compressors to run concurrently, the LC board will enable remote alarms and open terminals 26 and 27.
- Indoor Humidity: If the humidity inside the shelter is above 80% RH, the alarm contacts on terminals 28 and 29 will open.
- Commercial Power Loss: If the LC board detects a power loss on both wall units or the generator run becomes active, the alarm contacts on terminals 30 and 31 will open.
- Low Temp: If 45°F is sensed in the shelter, the LC board will open the contacts on terminals 34 and 35. Additionally, the board will send remote alarms.
- High Temp: If 98°F is sensed in the shelter, the LC board will open the contacts on terminals 32 and 33. Additionally, the LC will send remote alarms and enable blowers and free cooling dampers in an attempt to cool the shelter.
- HVAC 1 Fail: The HVAC 1 fail relay will open the alarm contacts from the LC board through any of the following situations:
  - Unit 1 High Pressure
  - Unit 1 Low Pressure
  - Unit 1 Power Loss
  - Unit 1 Freeze

Should Unit 1 encounter any of these issues, they will be communicated to the LC board which will open terminals 36 and 37. Additionally, the board will enable remote alarms.

- HVAC 2 Fail: The HVAC 2 fail relay will be energized from the LC board through any of the following situations:
  - Unit 2 High Pressure
  - Unit 2 Low Pressure
  - Unit 2 Power Loss
  - Unit 2 Freeze

Should Unit 2 encounter any of these issues, they will be communicated to the LC board, which will enable remote alarms and also open terminals 38 and 39.

DC FREE COOLING UNIT OPERATIONAL PARAMETERS

Overview

The Bard DC Free Cooling Unit system is pre-programmed to provide the most efficient operating parameters based on indoor temperature, outdoor temperature, dewpoint and relative humidity. The following operational parameters are factory default.

Cool Weather Operation (Free Cooling Available):

Stage 1 Cooling	88°F – Lead unit free-cooling damper opens
Stage 2 Cooling	90°F – Lag unit free-cooling damper opens
Stage 3 Cooling	92°F – Lead unit compressor, damper will stay open if conditions are conducive for free cooling
Stage 4 Cooling	93°F – Lag unit compressor, damper will stay open if conditions are conducive for free cooling
Hi-Temp Alarm #1	95°F
Hi-Temp Alarm #2	98°F – Emergency ventilation initiates, both dampers open, both blowers run
	74°F – All cooling stops, blowers stop
Stage 1 Heating	48°F – Lead unit heat strip activates
Stage 2 Heating	46°F – Lag unit heat strip activates
Low-Temp Alarm	45°F
	50°F – All heating stops, blowers stop

Warm Weather Operation (No Free Cooling Available):

Stage 1 Cooling	88°F – Lead unit compressor
Stage 2 Cooling	90°F – Lag unit compressor
Hi-Temp Alarm #1	95°F
Hi-Temp Alarm #2	98°F – Emergency ventilation initiates, both dampers open, both blowers run
	74°F – All cooling stops, blowers stop

Free cooling can take place providing the outside air meets four (4) separate criteria:

1. The outdoor temperature is below 70°F
2. The dewpoint of the outside air is below 60°F
3. The outdoor humidity is below 80% RH
4. The indoor humidity is below 60% RH

With an accurate psychrometer, it is easy to pinpoint when the damper should be open or closed during normal operations.

FIGURE 2.3
LC1000/1500 Controller Display

ALARM KEY
Allows viewing of active alarms
Silences audible alarms
Resets active alarms

MENU KEY
Allows entry to Main Menu

ESCAPE KEY
Returns to previous menu level
Cancels a changed entry

UP KEY
Steps to next screen in the display menu
Changes (increases) the value of a modifiable field

ENTER KEY
Accepts current value of a modifiable field
Advances cursor

DOWN KEY
Steps back to previous screen in the display menu
Changes (decreases) the value of a modifiable field

LC1000/1500 CONTROLLER USER INTERFACE

The microprocessor control used in these wall mount air conditioners allows for complete control and monitoring through the use of the LC1000 or LC1500 controller. These controllers utilize the latest in state-of-the-art technology including a large, easy-to-read backlit LCD graphic display.

The menu driven interface provides users the ability to scroll through three menu levels: Info, Control and Service. The menus permit the user to easily view, control and configure the unit.

The controller is completely programmed at the factory; therefore, most applications will require no field set-up. However, the default setpoints and their ranges are easily viewed and adjusted from the controller display. The program and operating parameters are permanently stored on FLASH-MEMORY in case of power failure. The controller is designed to manage temperature levels to a user-defined setpoint via control output signals to the wall-mount air conditioning system.

BARD-LINK™ WEB CARD COMMUNICATION BOARD

A web card communications board allows remote access, via Ethernet, to all functions of the controller system. This is the same as if one was in the building where the controller system is physically installed.

CONTROLLER POWER-UP

Whenever power is first applied to the controller, there is a forty (40) second time delay prior to any function (other than display) becoming active.

CONTROLLER INTERFACE ACRONYMS

SAT – Supply air temperature
RAT – Return air temperature
OAT – Outdoor air temperature
OAH – Outdoor air humidity
Dew – Dewpoint temperature
Sp – Temperature setpoint
Space – Space temperature
U1 – Unit 1
U2 – Unit 2
F – Indoor blower status
D – DC free cooling damper position status
EM – Emergency ventilation mode
C1 – Compressor activate status/
Compressor stage 1 activate status
HT – Heater status
OA Dew Point – Calculated outdoor dew point
FC – DC free cooling status
RN – Component run time in minutes in last hour
ST – Number of start requests in last hour
Dp – DC free cooling damper

CONTROLLER INTERFACE MENU STRUCTURE

On/Off Unit
Setpoints
Clock/Scheduler
Input/Output
    Analog Inputs
    Digital Inputs
    Relay Outputs
    Analog Outputs
Alarm History
Technician
    Information
    BMS Configuration
    Service Settings
        Control Loops
        Probe Adjustment
    Manual Managment
        Analog Inputs
        Digital Inputs
        Relay Outputs
        Analog Outputs
Factory
    Configuration
    I/O Configuration
    Factory Settings
    Initialization

In addition to the menu structure above, there are also Status and Alarm screens.

Press the MENU key from any screen to return to the Main Menu. Press the UP or DOWN keys to scroll through the available menus. When the desired menu is highlighted, press the ENTER key to access that menu. Press the ESCAPE key or MENU key to return to the STATUS screen from the Main Menu.

NOTE: *Normal operating setpoints have been locked and cannot be changed permanently, except by remote access. Any changes made to normal operational setpoints will be held for only 6o minutes. The following programming for typical application items can be accessed/changed locally and will not revert back after 60 minutes.*

Comfort Mode

1. Press and release the ENTER key for comfort mode to change the cooling control band from 88°F and 74°F to 79°F and 75°F for a period of 1 hour.
2. Control band will return to the programmed setting automatically after 1 hour.
3. The status screen will display COMFORT MODE while in overide mode.
4. Pressing the ENTER key during the 1-hour period will deactivate COMFORT MODE.

Status Screen

The STATUS screen is the default start-up screen and also the return screen after 5 minutes of no activity. The screen can be accessed any time by pressing the ESCAPE button repeatedly.

The main screen of the STATUS screen displays the current date, time, space temperature and temperature setpoint. The same screen will also show the current system operating status for Unit 1 (U1) and Unit 2 (U2).

The screen will display “B” for blower with “ON” or “OFF” and “D” for damper followed by the percentage that the damper is open. If the compressor is running, it will be noted by “C1”.

Using the UP/DOWN keys, the user can scroll through a host of other information:

- SAT/RAT/OAT/OAH and dewpoints at either unit
- Last hour averages information
- Last hour tracking information

FIGURE 2.4
Controller Status Display

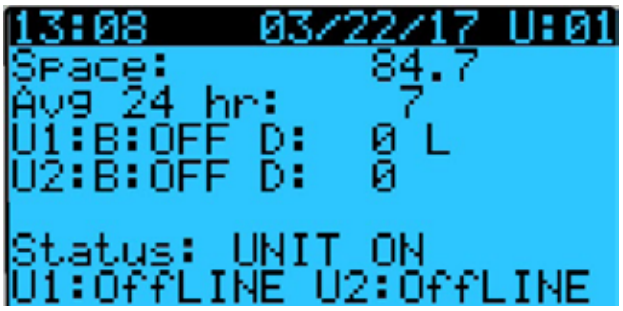

For the following items, press the MENU key to access programming.

Run Test

Execute a run test on each unit to verify the equipment is functioning correctly.

1. Go to Technician menu, press ENTER key.
2. Press UP or DOWN keys to get to Service Settings menu, press ENTER key.
3. Press UP or DOWN keys to get to Control Loops menu, press ENTER key.
4. Cursor will be flashing in upper left corner of screen. Press ENTER key to scroll to U1 Run Test.
5. Press UP key to change 'No" on screen to "Yes". Unit 1 will begin the run test.
6. After the Unit 1 run test ends, press ENTER key to scroll to U2 Run Test.
7. Press UP key to change 'No" on screen to "Yes". Unit 2 will begin the run test.

Run Test Approximate Timings (in Minutes)

Blower	On: 0:00
Damper	Open: 0:00 – 2:40
	Closed: 2:41 – 4:57
Compressor	On: 4:58
	Off: 6:00
Heat	On: 6:01
	Off: 7:10
Blower	Off: 8:19

Adjusting Date and Time

1. Go to Clock/Scheduler menu, press ENTER key.
2. Move the cursor to the selected choice by pressing the ENTER key.
3. Press UP or DOWN keys to change the date and/or time. The day will automatically change when the date has been altered.

Setting Continuous Blower

1. Go to Setpoint menu, press ENTER key.
2. Go to Blower Settings screen, move the cursor to the selected choice by pressing the ENTER key.
3. Press UP or DOWN keys to change the desired value:

   Lead: Lead unit blower only
   Both: Both units continuous

Advancing Lead/Lag Positions

1. Go to Clock/Scheduler menu, press ENTER key.
2. Go to Unit Rotation screen.
3. To switch lead unit: Move the cursor to the selected choice by pressing the ENTER key. Press UP or DOWN keys to change the desired value. Unit rotation will change from 1 to 2 or 2 to 1.

Changing to Celsius

1. Go to Factory menu, press ENTER key.
2. Go to Configuration menu. Move the cursor to Temperature Unit by pressing the ENTER key. Press UP or DOWN keys to change to °C. This will be a global change within the units on the structure; the temperature value will be displayed in °C for all locations within the display.

Calibrating Sensors

1. Go to Technician menu, press ENTER key.
2. Go to Service Settings menu, press ENTER key.
3. Go to Probe Adjustment, press ENTER key.
4. Move the cursor to enter the offset to the temperature value.

   Example: *The sensor reading displays on the screen as 80°F and the actual measured value using a calibrated sensor is 77°F. Enter an offset of -3.0°F to display the temperature correctly. An offset of -9.9°F to +9.9°F can be entered.*

Resetting Controller Model/Serial Numbers

1. Go to Factory menu, press ENTER key.
2. Go to Factory Settings screen, press ENTER key.
3. Press the ENTER key to move the cursor to the Serial Number selection. Press and hold UP or DOWN keys to get to the desired value and then press ENTER key. Repeat for the rest of the digits/characters: Press and hold UP or DOWN keys to get to the desired value and then press ENTER key to key in next digits/characters.
4. Model number is entered by the factory. In the case it is accidently changed, the field technicians will need to enter the model number. Follow Step 3 above to enter the model number in the same fashion that the serial number was entered.

Configuring Additional Indoor Temperature Sensors

Follow the steps below to configure additional remote indoor temperature sensors. The default remote sensor supplied by Bard is identified as B01, the first additional sensor added is B02 and the second additional sensor is B03 (see page 23 for directions on connecting the additional remote sensors to teminals 13 and 14 (B02) and 15 and 16 (B03).

1. Go to Technician menu, press ENTER key.
2. Go to Service Settings menu, press ENTER key.
3. Go to Control Settings, press ENTER key.
4. Use the ENTER key to select Number of Temperature Sensors. The number displayed is the total number of temperature sensors installed. The default setting is 1 meaning only the remote sensor supplied by Bard with the controller is installed.
5. Press the UP or DOWN keys to enter quantity of temperature sensors installed—1,2 or 3.
6. Move the cursor to Control using the ENTER key to pick AVERAGE (default) or HIGHEST for the sensors to control and maintain space temperature.

Disabling One Unit/Control and Making the Controller Work with Only One Unit

1. Go to Setpoint menu, press ENTER key.
2. Press UP or DOWN keys to go to the screen where it displays Number of Units and press ENTER key.
3. Change the value of Number of Units by pressing the DOWN key once to change to One (1), then press ENTER key.

An outdoor unit may now be powered down for an indefinite period of time for repairs or maintenance. The controller will operate on one unit only.

Acknowledging/Clearing Alarms

Alarm conditions activate a red LED indicator that backlights the ALARM function key. As an option, an alarm condition may also be enunciated by an audible alarm signal. An alarm is acknowledged by pressing the ALARM key. This calls up alarm display screen(s) that provide a text message detailing the alarm condition(s). After an alarm condition is corrected, the alarm can be cleared by pressing the ALARM key.

Simulating Alarms (Smoke, Hydrogen, Generator Alarms)

NOTE: *Both the smoke and Bard-supplied hydrogen detectors have manual test buttons on the face of the devices which may be easier to manipulate.*

1. Go to Technician menu, press ENTER key.
2. Go to Manual Management, press ENTER key.
3. Go to Digital Inputs, press ENTER key.
4. Press the ENTER key to move the cursor to Smoke Manual DI 1 and press ENTER key.
5. Press UP or DOWN keys to change the value from "Open" to "Closed"; alarm activates.
6. Reverse procedure to terminate test.
7. Repeat steps for hydrogen and generator using programming lines Hydrogen DI and Generator Run DI 3.

Simulating Alarms (Board Relays)

1. Go to Technician menu, press ENTER key.
2. Go to Manual Management, press ENTER key.
3. Go to Relay Outputs, press ENTER key.
4. Press the ENTER key to move the cursor to High Temp Relay 4 and press ENTER key.
5. Press UP or DOWN keys to change the value from "On" to "Off"; alarm activates.
6. Reverse procedure to terminate test.
7. Repeat steps using programming lines for low temp, HVAC fail and lag unit alarms.

Changing NC Contacts to NO Contacts (Board Relays)

1. Go to Factory menu, press ENTER key.
2. Go to I/O Configuration, press ENTER key.
3. Go to Relay Outputs, press ENTER key.
4. Press UP or DOWN keys to scroll to the desired relay output.
5. Press the ENTER key to move the cursor to Direction; press the UP key to change the contact direction to NO (from default NC). Verify the status of this relay contact change to Off.
6. When cursor is flashing at top left, press UP or DOWN keys to make changes to other relay outputs if required.

TABLE 2.1
Controller Programmable Features and Default Settings

Description	Range	Default Setpoint	Units
Temperature at local remote (main) sensor	--	--	--
Temperature Setpoint*	65 - 90	77	°F
Heating Setpoint*	52 -75	50	°F
Temperature High Limit - Level 1*	70 - 120	95	°F
Temperature High Limit - Level 2*	70 - 120	98	°F
Temperature Low Limit	28 - 65	45	°F
Comfort Mode Setpoint*	65 - 80	72	°F
Comfort Mode Operation Time*	30 - 90	60	Minutes
DC Freecooling Setpoint	--	55	°F
Lead-Lag Changeover Time (Rotation)	1 - 30 days, or 0 for disabled	1	Day(s)
Temperature Units	°F/°C	°F	--

* Normal operating setpoints have been locked and cannot be changed permanently, except by remote access. Any changes made to normal operational setpoints will be held for only 60 minutes.

CAUTION

The Bard DC Free Cooling Unit System has been pre-programmed with what is widely considered to be the best settings for efficiency and operation. Any changes to internal programming through the LC Series Controller not covered within this manual may cause the systems to operate improperly, cause internal damage to the HVAC units, cause the shelter to overheat, or other very serious consequences. Although complete controller programming architecture for the LC Controller has been provided, going outside the boundaries of what has been covered in this manual is not recommended.

FIGURE 2.5
LC1000-300/LC1500-300 Low Voltage Connections

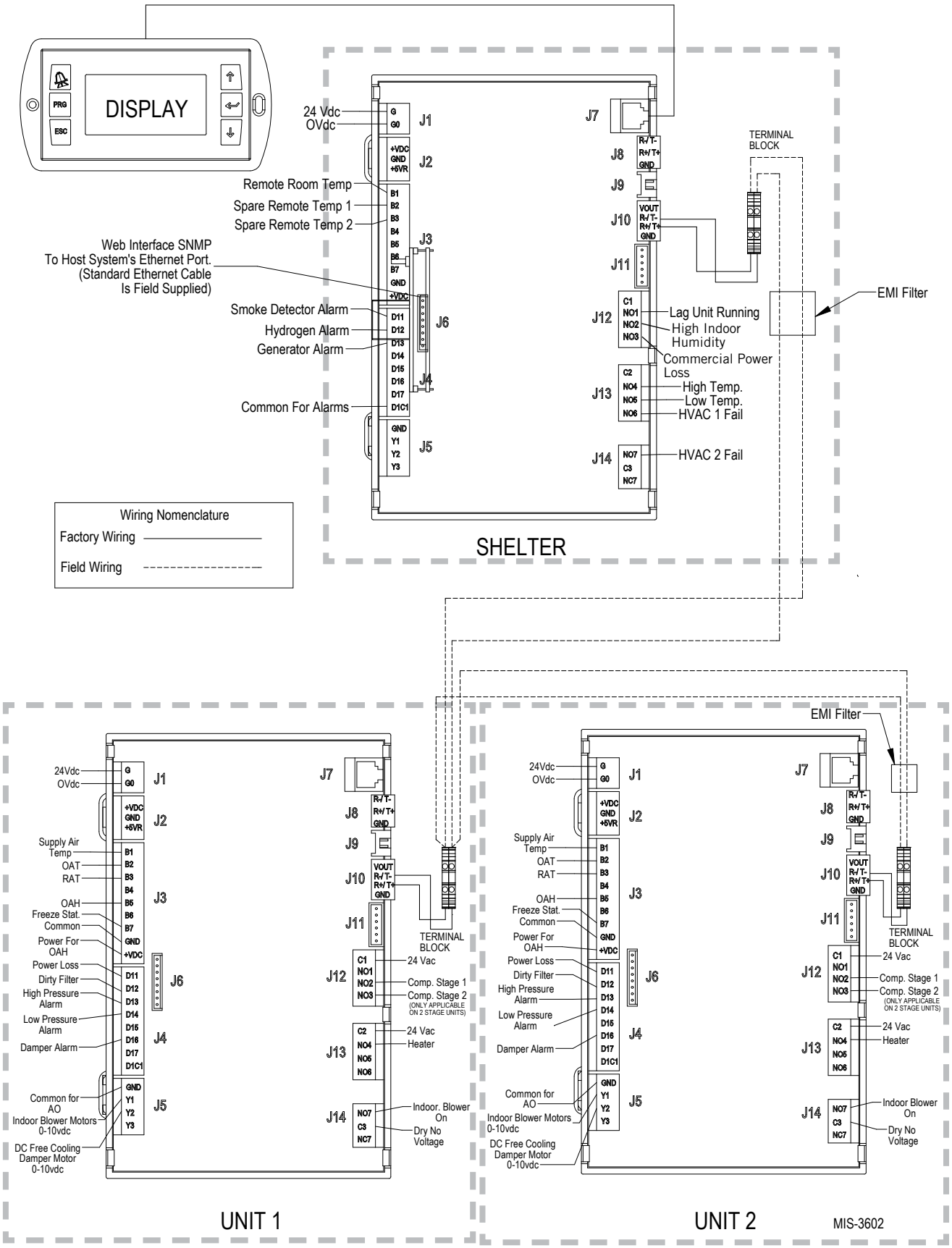

TROUBLESHOOTING LC1000-300/LC1500-300 CONTROLLER ALARMS

The LC1000/1500 controller is designed for continuous and dependable operation. In the event that a problem is encountered with the A/C system, the system controller may be used to diagnose the cause. The system controller will display alarms for the entire system; the TEC-EYE™ hand-held tool will only display alarms for an individual wall-mount unit.

The controller signals an alarm condition when the red backlight LED is illuminated behind the alarm key. An alarm indication is accompanied by a screen text message of the cause. Often the remedy is simple to determine by reading the alarm message, i.e., “Dirty Filter” (replace filter). The following guidelines are included to assist in troubleshooting the system due to operational or performance problems. If the problem can’t be resolved using the alarm screens and these guidelines, contact the BARD Technical Service Department at 419.636.0439 for assistance.

Signal	Description	Possible Cause	Component to Check	Recommended Action	Device Actions
Smoke/Fire Alarm	The entire unit(s) stops working. The alarm resets automatically.	Fire/smoke detector is triggered	Check the external fire/smoke detector	Replace the external fire/smoke detector	Indoor Blower: Off Compressor/ Condensor Fan: Off Heat: Off Damper: Closed
		Check if the connection to the corresonding input is ok or if the controller board is defective.	Check if the connection is ok.	Reconnect the cable. If the controller board is defective, replace it.	
High Temperature Alarm	Alarm is reset automatically. Occurs when the current indoor temperature is greater than the 2nd high temperature alarm setpoint value. The default is 95°F.	The cooling capacity loss or heat load loss is too great.	Check for leakages in the refrigerant circuit. Check if heat load exceeds the design range.	Remove the leakage. Increase the cooling capacity.	Compressor/ Condensor Fan: Off
		Compressor circuit failure.	Check if components connected to the compressor are ok. Check if compressor is ok. Check if the electric connection is ok.	Replace the defective components. Replace the compressor. Reconnect the cables.	
		Indoor temperature sensor failure.	Check if the sensor is shorted or has failed.	Replace the indoor temperature sensor.	
		Incorrect value set for the high temperature alarm.	Check if value is correct.	Correct the value.	
Low Temperature Alarm	Alarm can be reset automatically. Occurs when the current indoor temperature is less than the indoor temperature setpoint value minus the temperature alarm offset. The default is 45°F.	Heating capacity loss.	Check if the heaters are ok. Check for leaks around the unit.	If heaters have failed, replace them. Seal the leaks.	
		Indoor temperature sensor failure.	Check for a short in the sensor or if it has failed.	Replace the indoor temperature sensor.	
		Incorrect value set for the high temperature alarm.	Check if the value is correct.	Correct the value.	
Hydrogen Alarm (if detector is connected)	The indoor controller will activate Emergency Ventilation mode to exhaust any noxious gases from building to introduce outside fresh air. The alarm resets automatically.	Hydrogen detector is triggered.	Check the external hydrogen detectror.	Replace the external hydrogen detectror.	Indoor Blower: On Compressor/ Condensor Fan: On Heat: On Damper: On
		Check if connection to the corresponding input terminal is ok or if the controller is defective.	Check if the connection is ok.	Reconnect the cable. If the controller board is defective, replace it.	

Signal	Description	Possible Cause	Component to Check	Recommended Action	Device Actions
Generator Run Alarm	The indoor controller will activate an emergency ventilation mode on an input from generator run alarm which enables DC free cooling mode and will only allow lead unit to run in mechanical cooling as needed to satisfy any temperature. The alarm resets automatically.	Generator run is triggered. Check if connection to the corresponding input terminal is ok or if the controller is defective.	Check if the connection is ok.	Reconnect the cable. If the controller board is defective, replace it.	Indoor Blower: On Compressor/ Condensor Fan: On Heat: On Damper: On
Remote Indoor Temperature Sensor Failed Alarm **(B01)**	The alarm is activated if the sensor is faulty, a sensor wire is loose or an out-of-range value is read.	The alarm is activated if the sensor is faulty, a sensor wire is loose or an out-of-range value is read.	Configuration should be "0" if only the remote indoor temperature sensor supplied with controller is installed.* Check the indoor temperature sensor wiring. Check temperature vs. resistance of temperature sensor.	Replace the indoor temperature sensor.	
Spare Remote Indoor Temperature 1 Sensor Failed Alarm **(B02)**	The alarm is activated if the sensor is faulty, a sensor wire is loose or an out-of-range value is read.	The alarm is activated if the sensor is faulty, a sensor wire is loose or an out-of-range value is read.	Configuration should be "1" if a single *additional* remote indoor temperature sensor is installed.* Check the spare remote 1 temperature sensor wiring. Check temperature vs. resistance of temperature sensor.	Replace the spare remote 1 temperature sensor.	
Spare Remote Indoor Temperature 2 Sensor Failed Alarm **(B03)**	The alarm is activated if the sensor is faulty, a sensor wire is loose or an out-of-range value is read.	The alarm is activated if the sensor is faulty, a sensor wire is loose or an out-of-range value is read.	Configuration should be "2" if two *additional* remote indoor temperature sensors are installed.* Check the spare remote 2 temperature sensor wiring. Check temperature vs. resistance of temperature sensor.	Replace the spare remote 2 temperature sensor.	
High Indoor Humidity	The alarm is activated when indoor humidity is above 80% RH.	High humidity in space.	Indoor humidity sensor.	Verify sensor measurement.	
Lag Unit Run	Alarm occurs when lag unit compressor is active.	High load in shelter.			
Commercial Power Loss	Alarm occurs when power loss is detected on both units.	Power outage.	Power loss relay on both units.	Verify relay operation.	

* See **Configuring Additional Remote Indoor Temperature Sensors** on page 34.

SECTION 3:

APPENDIX

LC1000-300/LC1500-300 CONTROLLER ARCHITECTURE

CAUTION: *The Bard DC Free Cooling Unit System has been pre-programmed with what is widely considered to be the best settings for efficiency and operation. Any changes to internal programming through the LC1000/1500 controller or the TEC-EYE™ not covered within this manual may cause the systems to operate improperly, cause internal damage to the HVAC units, cause the shelter to overheat or other very serious consequences. Although complete controller programming architecture for the LC1000/1500 controller has been provided, going outside the boundaries of what has been covered in this manual is not recommended.*

Screen	Menu Item	Range	Default Value	Description
MAIN STATUS SCREEN (Use UP/DOWN keys to scroll)				Displays current data
	Space Temp		(Current Temp)	
	Setpoint		°F Setpoint	
	Unit 1 Blower		Off/On	Displays status of blower
	Unit 1 Damper		%	Displays percentage of current opening
	Unit 1 Compressor		C1/nothing	Displays status of compressor
	Unit 2 Blower		Off/On	Displays status of blower
	Unit 2 Damper		%	Displays percentage of current opening
	Unit 2 Compressor		C2/nothing	Displays status of compressor
	Status		Unit On	LC-Series controller is currently enabled ("Off by Keypad" if disabled in controller)
	U1		Online	Verification of communication with Unit 1
	U2		Online	Verification of communication with Unit 2
	Unit 1/Unit 2 SAT		°F	Supply air temperature (discharge air temperature)
	Unit 1/Unit 2 RAT		°F	Return air temperature
	Unit 1/Unit 2 OAT		°F	Outdoor air temperature
	Unit 1/Unit 2 OAH		%H	Outdoor air humidity
	DEW			
	Last Hour Averages			Averages from last hour of operation
	Inside Temp Avg		°F	
	Outside Temp Avg		°F	
	Outside Hum Avg		%H	
	OA Dewpoint Avg		°F	
	Last Hour Tracking			Statistics from last 60 min of operation
	Free Cool U1/U2 Run		Minutes	Running minutes of damper activation
	Free Cool U1/U2 Start		#	Damper initiations
	Compressor 1 U1/U2 Run		Minutes	Compressor run time (single stage units or 1st stage compressor of 2-stage units)
	Compressor 1 U1/U2 Start		#	Compressor initiations (single stage units or 1st stage compressor of 2-stage units)
	Compressor 2 U1/U2 Run		Minutes	2nd stage compressor run time
	Compressor 2 U1/U2 Start		#	2nd stage initiations
	Heating U1/U2 Run		Minutes	Heating run time
	Heating U1/U2 Start		#	Heating initiations

Screen	Menu Item	Range	Default Value	Description
MAIN MENU (MENU key to enter, use UP/DOWN keys to scroll)				
	ON/OFF UNIT			
	Unit Address	0-31	1	Physical address of controller
	Power by Display	On/Off	Off	
	Status	0-99	On	"OFF by Keyboard" system has been turned off at controller
End of ON/OFF UNIT				
	SETPOINTS	All setpoint changes are limited to 60 minutes		
	Setpoints			
	Cooling Setpoint	65°F – 90°F	77°F	
	Heating Setpoint	52°F – 75°F	60°F	
	Stage Delay	0-999	10 seconds	
	Humidity Setpoint	40°F – 70°F	60°F	
	Differential	1°F – 9.9°F	5°F	
	FreeCool	55°F – 61°F	55°F	
	DC OA-Return Diff.	0°F – 99.9°F	7°F	
	Supply Temp Low Limit	0°F – 999.9°F	35°F	
	Differential	0°F – 99.9°F	5°F	
	Alarm Delay	0-999	10 seconds	
	Run Test Time	0-999	60 seconds	
	Indoor Temperature			
	Low Alarm	28°F – 65°F	45°F	
	High Alarm	70°F – 120°F	85°F	
	High Alarm 2	70°F – 120°F	90°F	
	Blower Settings			
	Continuous	None/Lead/Both	None	"Lead Only" or "Both" also available
	Blower Speeds			
	Heat	0-7.6	7.0V	Control voltage supplied from wall-mount unit control boards to blower in heat
	Econ	0-7.6	7.0V	Control voltage supplied from wall-mount unit control boards to blower in regular DC free cooling
	Econ Low Temp	0-7.6	3.8V	Control voltage supplied from wall-mount unit control boards to blower in low ambient condition DC free cooling
	Full Load	0-7.6	4.1V	Control voltage supplied from wall-mount unit control boards to blower in mechanical cooling
	Setpoint			
	Low Pressure Setup			
	Outside Setpoint	0°F – 99.9°F	55°F	Temperature at which control separates two (2) different low pressure situations
	Differential	0°F – 99.9°F	5°F	This differential applies to the outside setpoint

Screen	Menu Item	Range	Default Value	Description
	Above Setpoint Delay	0-999	120 seconds	Any low pressure situation above the outside setpoint will be delayed 120 seconds before an alarm is initialized
	Below Setpoint Delay	0-999	180 seconds	Any low pressure situation below the outside setpoint will be delayed 180 seconds before an alarm is initialized
	Unit Alarm Relay			
	Filter	Yes/No	No	
	Freezer	Yes/No	Yes	
	Damper	Yes/No	No	
	Low SA	Yes/No	No	
	ComPr	Yes/No	Yes	
	Sensor	Yes/No	No	
	Offline	Yes/No	No	
	Power	Yes/No	Yes	
	Setpoint			
	Comfort Mode	30-90	60 minutes	Setpoint of 72 is maintained for 60 minutes for technician comfort
	Comfort Setpoint	0°F – 99.9°F	72°F	
	Number of Units	1-2	2	Amount of systems connected to controller (choice of 1 or 2). See page 24.
	Unit 1	Off/On	Off	
	Unit 2	Off/On	Off	
	Next	0-9	1	
	OK	Off/On	Off	
End of SETPOINTS				
	CLOCK/SCHEDULER			
	Clock			
	Time			
	Date		(Current date)	
	Hour		(Current time)	
	Day		(Current day of week)	
	Unit Rotation 2		1 or 2	Which unit is currently in lead status
	Switch Lead	No/Yes	No	Change to "Yes" to advance lead status to other unit
	By Time	Yes/No	Yes	
	Rotate Days	0-30	1	
	By Alarm	Yes/No	Yes	
	By Demand	Yes	Yes	
	Clock			
	Daylight Savings Time	Enable/Disable	Enable	System Clock will follow DST Protocol, "Disable" if desired
	Transition Timed	0-240	60 minutes	

Screen	Menu Item	Range	Default Value	Description
	Start:	First, Second, Third, Fourth, Last	Last	
		Sunday – Saturday	Sunday	
		January – December	March	
		0:00 – 12:00	2:00	
	End:	First, Second, Third, Fourth, Last	Last	
		Sunday – Saturday	Sunday	
		January – December	October	
		0:00 – 12:00	3:00	
End of CLOCK/SCHEDULER				
	INPUT/OUTPUT			
	Analog Inputs			
	Indoor Temp Input B001	-999.9 – 999.9		
	Indoor Humidity Input B005	-3276.8 – 3276.7		
	Digital Inputs			
	Smoke Detector DI 1 Status	Open/Closed	Open	
	Hydrogen Detector DI 2 Status	Open/Closed	Open	
	Generator Run DI 3 Status	Open/Closed	Open	
	Relay Outputs			
	Lag Unit Run Relay 1 Status	Off/On	On	
	High Indoor Humidity Relay 2 Status	Off/On	On	
	Commercial Power Loss Relay 3 Status	Off/On	On	
	High Temp Alarm Relay 4 Status	Off/On	On	
	Low Temp Alarm Relay 5 Status	Off/On	On	
	HVAC 1 Fail Relay 6 Status	Off/On	On	
	HVAC 2 Fail Relay 7 Status	Off/On	On	
End of INPUT/OUTPUT				

Screen	Menu Item	Range	Default Value	Description
	ALARM HISTORY	Use the Up/Down keys to scroll through the latest alarms/conditions		
	001: Indoor Hum			
	Indoor Temp	-999.9 – 999.9		
	Indoor Humidity	-3276.8 – 3276.7		
	Remote1	-999.9 – 999.9		
	Remote2	-999.9 – 999.9		
	Cool Control T			
	Heat Control T			
End of ALARM HISTORY				
	TECHNICIAN			
	Service Menu			
	Information			
	Bard			
	Code		Inside controller	"Unit Controller" would be a pre-programmed wall-mount unit board
	Version	0-99	1.20	
	Bios	0-99	6.33	
	Boot	0-99	4.05	
	FLSH 2048	9999	None	Internal memory specifications
	RAM 512	999		
	0MB	0-9		
	T memory writes	0-32767		
	3.2 cycle/s	0-9999	312 ms	
	Power Cycle Status			
	Last On Time	0-99	mm/dd/yy hh:mm:ss	
	Last Off Time	0-99	mm/dd/yy hh:mm:ss	
	Length Time Off			
	Days: ### Hrs: ### Min: ###			
	BMS Configuration			
	BMS Port 1			
	Protocol:	CAREL, LON, BACnet, MSTP, MODBUS EXT, PCO LOAD, MODBUS, MODEM	Carel	
	Address	0 – 999	1	
	Baud Rate	1200, 2400, 4800, 9600, 19200	19200	

Screen	Menu Item	Range	Default Value	Description
	Service Settings			
	Control Settings			
	Remote Sensors	0,1,2	0	Enter the amount of extra remote sensors
	Control to	Average/Highest	Average	Choose "Average" or "Highest"
	Staging Type	Alternate/Lead Lag	Alternate	
	U1 Run Test		No	"Yes" to begin Run Test Unit 1
	U2 Run Test		No	"Yes" to begin Run Test Unit 2
	Probe Adjustment			
	Indoor Temp Input B001			
	Indoor Temp			
	Offset	99.9	0	
	Value	-3276.8 – 3276.7		
	Indoor Humidity Input B005			
	Indoor Temp			
	Offset	99.9	0	
	Value	-3276.8 – 3276.7		
	Manual Management			
	Analog Inputs			
	Indoor Temp	-3276.8 – 3276.7		
	Manual Control B001	Off/On	Off	On to manually change temperature seen by controller
	Manual Position	-1000 – 1000	0	Degrees of change in sensor for manual control
	Value		(Temp + Value)	Current temperature plus the value in manual position
	Indoor Humidity			
	Manual Control B005	Off/On	Off	
	Manual Position	0.0	0	
	Value	-3276.8 – 3276.7		
	Digital Inputs			
	Smoke Detector			
	Manual DI 1	Off/On	Off	"On" to allow artificial manipulation of smoke alarm input
	Manual Position	Closed/Open	Closed	
	DI 1 Status	Closed/Open		
	Hydrogen Detector			
	Manual DI 2	Off/On	Off	"On" to allow artificial manipulation of hydrogen alarm input

Screen	Menu Item	Range	Default Value	Description
	Manual Position	Closed/Open	Closed	
	DI 2 Status	Closed/Open		
	Generator Run Fail			
	DI 3 Status	Open		
	Manual DI 3	Off/On	Off	"On" to allow artificial manipulation of generator run input
	Manual Position	Closed/Open	Closed	
	DI3 Status	Closed/Open		
	Relay Outputs			
	Lag Unit Run Alarm			
	Manual Relay 1	Off/On	Off	
	Manual Position	Off/On	--	
	Relay 1 Status	Off/On	--	
	High Indoor Humidity Alarm			
	Manual Relay 2	Off/On	Off	
	Manual Position	Off/On	--	
	Relay 2 Status	Off/On	--	
	Commercial Power Loss Alarm			
	Manual Relay 3	Off/On	Off	
	Manual Position	Off/On	--	
	Relay 3 Status	Off/On	--	
	High Temperature Alarm			
	Manual Relay 4	Off/On	Off	
	Manual Position	Off/On	--	
	Relay 4 Status	Off/On	--	
	Low Temperature Alarm			
	Manual Relay 5	Off/On	Off	
	Manual Position	Off/On	--	
	Relay 5 Status	Off/On	--	
	HVAC 1 Fail Alarm			
	Manual Relay 6	Off/On	Off	
	Manual Position	Off/On	--	
	Relay 6 Status	Off/On	--	
	HVAC 2 Fail Alarm			
	Manual Relay 7	Off/On	Off	
	Manual Position	Off/On	--	
	Relay 7 Status	Off/On	--	
End of TECHNICIAN				
	FACTORY			
	Initialization			

Screen	Menu Item	Range	Default Value	Description
	Passwords			
	Insert new passwords			
	User		0000	
	Technician (PW1)		0000	
	Factory (PW2)		0000	
	Configuration			
	Temperature Units	°F/°C	°F	
	Pressure Units	psi/bar	psi	
	Force Clock Enable	Yes/No	Yes	
	Clock Mode	24hour/12hour	24 hour	
	Disable Buzzer	Yes/No	Yes	
	Startup Delay	0s – 9999s	1 second	
	Enable Unit On/Off			
	By digit input	On/Off	Off	
	By supervisor	On/Off	Off	
	By pLAN network	On/Off	Off	
	By schedule	On/Off	Off	
	Unit Control			
	Custom 1	On/Off	Off	
	Custom 2	On/Off	Off	
	Custom 3	On/Off	Off	
	Custom 4	On/Off	Off	
	Analog Input Filtering			
	Enable	No/Yes	No	
	Input 1	4s – 256m	19 seconds	
	Input 2	4s – 256m	19 seconds	
	Input 3	4s – 256m	19 seconds	
	Input 4	4s – 256m	19 seconds	
	Input 5	4s – 256m	19 seconds	
	Factory Settings			
	Manual Control Reset			
	Enable	Yes/No	Yes	
	Time	0m – 500m	60 minutes	
	Local Setpoint Reset	0m – 180m	60 minutes	
	PW/Return Delay	0s – 9999s	300 seconds	Display goes to status page and backlight shuts off in 5 minutes
	Scheduler			
	Number of Schedules	0 – 10	0	
	Optimized Start	Yes/No	No	
	Set 1 Adjust	Yes/No	No	
	Set 2 Adjust	Yes/No	No	
	Holidays			
	Number	0 – 16	0	

Screen	Menu Item	Range	Default Value	Description
	I/O Configuration			
	Analog Inputs			
	Indoor Temp			
	Enable: Ch: B001	On/Off	On	
	Resolution	Normal/High Res.		
	Type	**Ohm x5**, Ohm x1, NTC, PT1000, 0-1VDC, 0-10VDC, 4-20mA, On/Off, 0-4VDC, NTC HT, 50T90, 10T170, nu10, SPKP00B7T0, nu12, nu13	Normal Ohm x5	
	Minimum	-3276.8 – 3276.7		
	Maximum	-3276.8 – 3276.7		
	Offset	-3276.8 – 3276.7		
	Value	-3276.8 – 3276.7		
	Indoor Temp			
	Input B001		###.#	
	Out of Range Alarm			
	Power Delay	0 – 999s	5 seconds	
	Run Delay	0 – 535s	5 seconds	
	Indoor Humidity			
	Enable: Ch: B005	On/Off	On	
	Resolution	Normal/High Res.		
	Type	Ohm x5, Ohm x1, NTC, PT1000, 0-1VDC, 0-10VDC, **4-20mA**, On/Off, 0-4VDC, NTC HT, 50T90, 10T170, nu10, SPKP00B7T0, nu12, nu13	Normal 4-20mA	
	Minimum	-3276.8 – 3276.7		
	Maximum	-3276.8 – 3276.7		
	Offset	-3276.8 – 3276.7		
	Value	-3276.8 – 3276.7		

Screen	Menu Item	Range	Default Value	Description
	Indoor Humidity			
	Input B001		###.#	
	Out of Range Alarm			
	Power Delay	0 – 999s	5 seconds	
	Run Delay	0 – 535s	5 seconds	
	Units: Temperature/ Pressure/Other		Other	
	Digital Inputs			
	Smoke Detector			
	Enable: Channel: 1	On/Off	On	
	Action	Closed/Open	Closed	
	Delay	0 – 999s	0	
	Status	Closed/Open		
	Hydrogen Detector			
	Enable: Channel: 2	On/Off	On	
	Action	Closed/Open	Closed	
	Delay	0 – 999s	0	
	Status	Closed/Open		
	Generator Run Fail			
	Enable: Channel: 3	On/Off	On	
	Action	Closed/Open	Closed	
	Delay	0 – 999s	0	
	Status	Closed/Open		
	Relay Outputs			
	Lead Lag On Alarm			
	Enable	Yes/No	Yes	
	Channel	0 – 18	1	
	Direction	N.O./N.C.	N.C.	
	Status	Off/On		
	High Indoor Humidity			
	Enable	Yes/No	Yes	
	Channel	0 – 18	2	
	Direction	N.O./N.C.	N.C.	
	Status	Off/On		
	Commercial Power Loss			
	Enable	Yes/No	Yes	
	Channel	0 – 18	3	
	Direction	N.O./N.C.	N.C.	
	Status	Off/On		
	High Temperature Alarm			
	Enable	Yes/No	Yes	
	Channel	0 – 18	4	

Screen	Menu Item	Range	Default Value	Description
	Direction	N.O./N.C.	N.C.	
	Status	Off/On		
	Low Temperature Alarm			
	Enable	Yes/No	Yes	
	Channel	0 – 18	5	
	Direction	N.O./N.C.	N.C.	
	Status	Off/On		
	HVAC1 Fail Alarm			
	Enable	Yes/No	Yes	
	Channel	0 – 18	6	
	Direction	N.O./N.C.	N.C.	
	Status	Off/On		
	HVAC2 Fail Alarm			
	Enable	Yes/No	Yes	
	Channel	0 – 18	7	
	Direction	N.O./N.C.	N.C.	
	Status	Off/On		
End of FACTORY				