INSTALLATION INSTRUCTIONS

11EER WA Series
Wall Mount Air Conditioner

Models:

W42AC-A	W48AC-A	W60AC-A	W72AC-A
W42AC-B	W48AC-B	W60AC-B	W72AC-B
W42AC-C	W48AC-C	W60AC-C	W72AC-C
W42ACRC	W48ACRC	W60ACRC	W72ACRC
W42ACDA	W48ACDA	W60ACDA	W72ACDA
W42ACDB	W48ACDB	W60ACDB	W72ACDB
W42ACDC	W48ACDC	W60ACDC	W72ACDC

Bard®
SINCE 1914
Climate Control Solutions

Bard Manufacturing Company, Inc.
Bryan, Ohio 43506
www.bardhvac.com

Manual: 2100-692J
Supersedes: 2100-692I
Date: 8-16-23

CONTENTS

General Information 4
General 4
Shipping Damage 4
Additional Publications 4
Duct Work 6
Filters 6
Filter Removal/Installation 6
Switching Filter Sizes 7
Fresh Air Intake 8

Installation 9
Basic Installation Design and Application Planning.. 9
Wall Construction 9
Outdoor Area Inspection 9
Condensate Water Drainage 9
Indoor Ducted and Non-Ducted Applications 9
Indoor Supply Airflow 9
Indoor Return Airflow 9
Ducted Applications 9
Free Blow Applications 10
Thermostat or Indoor Temperature Sensor Placement 10
Unit Installation 10
Materials/Tool List 10
Wall Preparation 11
Wall Mount Installation to Wall Surface 11
Wiring – Main Power 18
High Voltage Connections 18
Wiring – Low Voltage 19
Low Voltage (24VAC) Connections 19
Unit Shutdown Feature 19
Balanced Climate™ Feature 19
Dehumidification Feature 20
Ventilation Features 20
Low Ambient Control (LAC) 20
Outdoor Temperature Switch and Freeze Protection Thermostat 20
Alarm Relay Feature 20
DDC Controls Feature 20
Dirty Filter Switch Indicator (DFS) 20
Discharge Air Sensor 20
Airflow Switch 20
Compressor Current Sensor 20

Start Up 24
General 24
Topping Off System Charge 24
Safety Practices 24
Important Installer Note 24
High Pressure Switch 24
Three Phase Scroll Compressor Start Up Information 24
Phase Monitor 25
Condenser Fan Operation 25
Service Hints 25
Sequence of Operation 25
Balanced Climate™ Mode 25
Vent Connection Plug 26
Compressor Control Module 26
Features 26
Delay-on-Make Timer 26
Short Cycle/Delay-on-Break 26
Low Pressure Detection 26
High Pressure Detection 26
Test Mode 26
Brownout Protection with Adjustment 26
Pressure Service Ports 27

Service 28
Troubleshooting Nidec SelecTech Series ECM Motors 28
If the Motor is Running 28
If the Motor is Not Running 28
Model SelecTech Communication Diagnostics ... 29
Fan Blade Setting Dimensions 30
R-410A Refrigerant Charge 30
Removal of Fan Shroud 30
Setting Unit Airflow 35
Blower Speeds 35
Speed Tap 1 – Vent/Blower Only 36
Speed Tap 2 – Balanced Climate 36
Speed Tap 3 – Default LO Cooling & Heating 36
Speed Tap 4 – Optional MED Cooling & Heating 36
Speed Tap 5 – Optional HI Cooling & Heating 36
Dirty Filter Switch 36
Dirty Filter Switch Adjustment 36

FIGURES

Figure 1 Front Control Panel Cover 6
Figure 2 Removing Left Filter 6
Figure 3 Removing Second Filter 7
Figure 4 Filter Tabs in Up Position 7
Figure 5 Bend FIlter Tabs Down 7
Figure 6 Remove Four Screws 7
Figure 7 Re-Install Filter Support Brackets into Lower Slots 7
Figure 8 Re-Install Screws and Bend Tabs Up 7
Figure 9 Install Right 2" Filter 8
Figure 10 Install Left 2" Filter 8
Figure 11 Fresh Air Damper 8
Figure 12 Vent Installation/Removal Clearance Required 12
Figure 13 Unit Dimensions 13
Figure 14 Mounting Instructions 14
Figure 15 Electric Heat Clearance 15
Figure 16 Wall Mounting Instructions 16
Figure 17 Wall Mounting Instructions 16
Figure 18 Common Wall Mounting Installations 17
Figure 19 High Voltage Connections 18
Figure 20 Programmable Thermostat Connections 22
Figure 21 Non-Programmable Thermostat Connections 23
Figure 22 Compressor Control Module 27

Figure 23 Motor Connections 28
Figure 24 Motor Connections 29
Figure 25 Fan Blade Setting 30
Figure 26 Fan Shroud Removal 30
Figure 27 Speed Taps..... 35
Figure 28 Speed Taps..... 36
Figure 29 Dirty Filter Switch and Dirty Filter Indicator Light/Reset Switch 37
Figure 30 Adjusting Filter Switch 38

TABLES

Table 1 Clearance Required for Service Access and Adequate Condenser Airflow..... 12
Table 2 Minimum Clearances Required to Combustible Materials..... 12
Table 3 Additional Low Voltage Connections (if applicable)..... 19
Table 4 Low Voltage Connections for DDC Control 20
Table 5 Wall Thermostats 21
Table 6 Humidity Controls 21
Table 7 CO_2 Controllers 21
Table 8 Thermostat Wire Size..... 21
Table 9 Fan Blade Dimensions..... 30
Table 10 Cooling Pressure – Standard Airflow..... 31
Table 11 Cooling Pressure – Balanced Climate Airflow 32
Table 12A Electrical Specs W42AC, W48AC 33
Table 12B Electrical Specs W60AC, W72AC 34
Table 13 Recommended Airflow..... 35
Table 14 Blower Speeds for Unit Operational Modes..... 35
Table 15 Indoor Blower Performance 39
Table 16 Maximum ESP Electric Heat Only..... 40
Table 17 Electric Heat 40
Table 18 Vent and Control Options 41
Table 19 Optional Accessories 42

GRAPHS

Graph 1 W42AC FAD-NE5 W/O Exhaust Ventilation Delivery 43
Graph 2 W48AC FAD-NE5 W/O Exhaust Ventilation Delivery 43
Graph 3 W60AC FAD-NE5 W/O Exhaust Ventilation Delivery 44
Graph 4 W72AC FAD-NE5 W/O Exhaust Ventilation Delivery 44

Air Conditioner Wall Mount Model Nomenclature

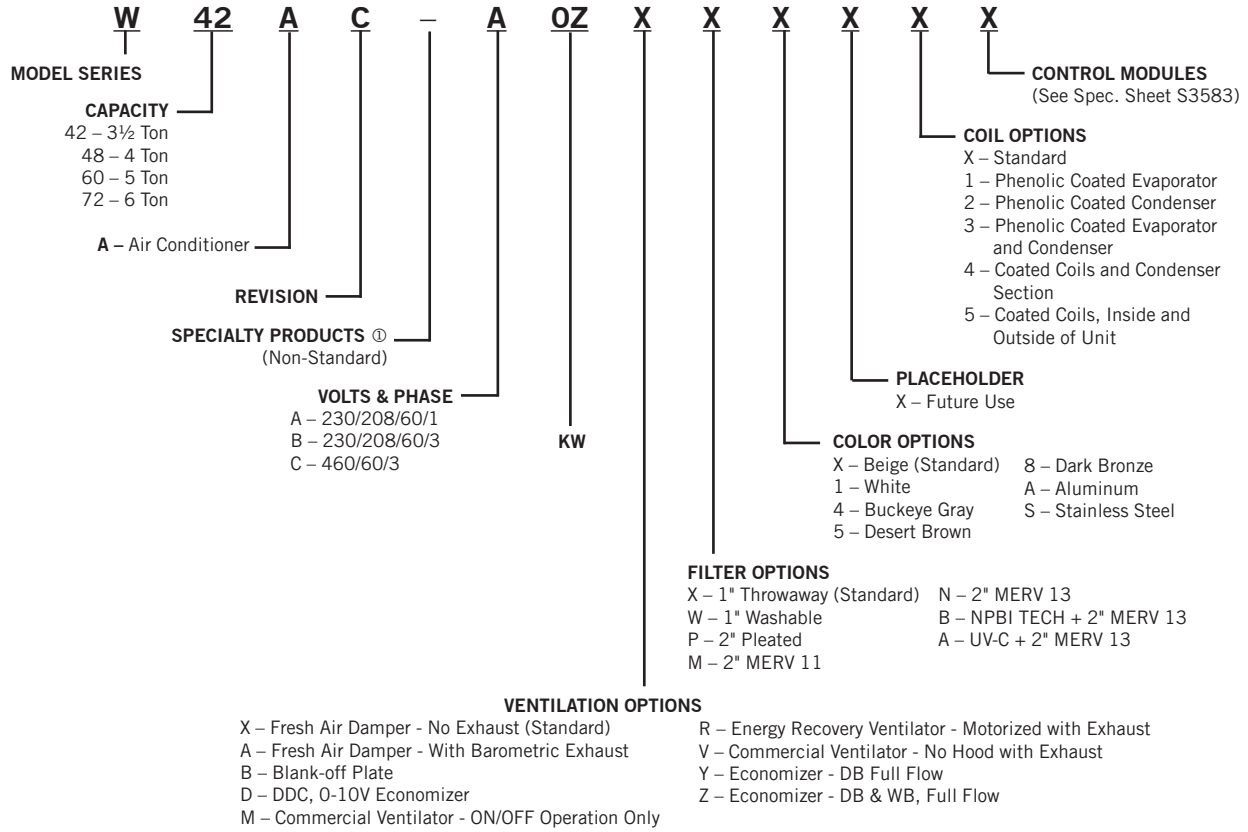

NOTE: *Vent options X and B are without exhaust capability. May require separate field-supplied barometric relief in building.*

① Insert "D" for dehumidification with hot gas reheat. Reference Form 7960-811 for complete details. Insert "R" for units with isolation transformer for high resistance ground applications.

GENERAL INFORMATION

General

The equipment covered in this manual is to be installed by trained, experienced service and installation technicians.

This appliance is not intended for use by persons (including children) with reduced physical, sensory or mental capabilities, or lack of experience and knowledge, unless they have been given supervision or instruction concerning use of the appliance by a person responsible for their safety.

Children should be supervised to ensure that they do not play with the appliance.

The refrigerant system is completely assembled and charged. All internal wiring is complete.

The unit is designed for use with or without duct work. Flanges are provided for attaching the supply and return ducts.

These instructions explain the recommended method to install the air cooled self-contained unit and the electrical wiring connections to the unit.

These instructions and any instructions packaged with any separate equipment required to make up the entire air conditioning system should be carefully read before beginning the installation. Note particularly "Starting Procedure" and any tags and/or labels attached to the equipment.

While these instructions are intended as a general recommended guide, they do not supersede any national and/or local codes in any way. Authorities having jurisdiction should be consulted before the installation is made. See following section for information on codes and standards.

Size of unit for a proposed installation should be based on heat loss calculation made according to methods of Air Conditioning Contractors of America (ACCA). The air duct should be installed in accordance with the Standards of the National Fire Protection Association for the Installation of Air Conditioning and Ventilating Systems of Other Than Residence Type, NFPA No. 90A, and Residence Type Warm Air Heating and Air Conditioning Systems, NFPA No. 90B. Where local regulations are at a variance with instructions, installer should adhere to local codes.

Shipping Damage

Upon receipt of equipment, the carton should be checked for external signs of shipping damage. If damage is found, the receiving party must contact the last carrier immediately, preferably in writing, requesting inspection by the carrier's agent.

Additional Publications

These publications can help when installing the air conditioner. They can usually be found at the local library or purchased directly from the publisher. Be sure to consult the current edition of each standard.

National Electrical Code.....ANSI/NFPA 70

Standard for the Installation of Air Conditioning and Ventilating Systems
.....ANSI/NFPA 90A

Standard for Warm Air Heating and Air Conditioning Systems
.....ANSI/NFPA 90B

Load Calculation for Winter and Summer Air Conditioning
..... ACCA Manual J Residential

Duct Design for Residential Winter and Summer Air Conditioning and Equipment Selection
..... ACCA Manual D

For more information, contact these publishers:

ACCA **Air Conditioning Contractors of America**
1712 New Hampshire Ave. N.W.
Washington, DC 20009
Telephone: (202) 483-9370
Fax: (202) 234-4721

ANSI **American National Standards Institute**
11 West Street, 13th Floor
New York, NY 10036
Telephone: (212) 642-4900
Fax: (212) 302-1286

ASHRAE **American Society of Heating, Refrigeration and Air Conditioning Engineers, Inc.**
1791 Tullie Circle, N.E.
Atlanta, GA 30329-2305
Telephone: (404) 636-8400
Fax: (404) 321-5478

NFPA **National Fire Protection Association**
Batterymarch Park
P.O. Box 9101
Quincy, MA 02269-9901
Telephone: (800) 344-3555
Fax: (617) 984-7057

ANSI Z535.5 Definitions:

DANGER: Indicate[s] a hazardous situation which, if not avoided, will result in death or serious injury. The signal word "DANGER" is to be limited to the most extreme situations. DANGER [signs] should not be used for property damage hazards unless personal injury risk appropriate to these levels is also involved.

WARNING: Indicate[s] a hazardous situation which, if not avoided, could result in death or serious injury. WARNING [signs] should not be used for property damage hazards unless personal injury risk appropriate to this level is also involved.

CAUTION: Indicate[s] a hazardous situation which, if not avoided, could result in minor or moderate injury. CAUTION [signs] without a safety alert symbol may be used to alert against unsafe practices that can result in property damage only.

NOTICE: [this header is] preferred to address practices not related to personal injury. The safety alert symbol shall not be used with this signal word. As an alternative to "NOTICE" the word "CAUTION" without the safety alert symbol may be used to indicate a message not related to personal injury.

DANGER

WARNING

CAUTION

NOTICE

⚠ WARNING

Electrical shock hazard.

Have a properly trained individual perform these tasks.

Failure to do so could result in electric shock or death.

⚠ WARNING

Electrical shock hazard.

Do not operate this equipment without an earth ground attached and always disconnect the remote electric power supplies before servicing.

Electrical shock can result in serious injury or death.

⚠ WARNING

Fire hazard.

Maintain minimum 1/4" clearance between the supply air duct and combustible materials in the first 3' feet of ducting.

Failure to do so could result in fire causing damage, injury or death.

⚠ WARNING

Heavy item hazard.

Use more than one person to handle unit.

Failure to do so could result in unit damage or serious injury.

⚠ CAUTION

Sharp metallic edges.

Take care and wear appropriate protective devices to avoid accidental contact with sharp edges.

Failure to do so can result in personal injury.

Duct Work

All duct work, supply and return, must be properly sized for the design airflow requirement of the equipment. Air Conditioning Contractors of America (ACCA) is an excellent guide to proper sizing. All duct work or portions thereof not in the conditioned space should be properly insulated in order to both conserve energy and prevent condensation or moisture damage.

Refer to Maximum ESP of Operation Electric Heat table on page 40.

Design the duct work according to methods given by the Air Conditioning Contractors of America (ACCA). When duct runs through unheated spaces, it should be insulated with a minimum of 1" of insulation. Use insulation with a vapor barrier on the outside of the insulation. Flexible joints should be used to connect the duct work to the equipment in order to keep the noise transmission to a minimum.

All model series require a 1/4" clearance to combustible material for the first 3' of duct attached to the outlet air frame is required. See instructions on page 11 and Figures 14 – 18 (pages 14 – 17) for further details.

Ducts through the walls must be insulated and all joints taped or sealed to prevent air or moisture entering the wall cavity.

Some installations may not require a return air duct. A metallic return air grille is required with installations not requiring a return air duct. The spacing between louvers on the grille shall not be larger than 5/8".

Any grille that meets with 5/8" louver criteria may be used. It is recommended that Bard Return Air Grille Kits RG5 or RFG5 be installed when no return duct is used. Contact distributor or factory for ordering information. If using a return air filter grille, filters must be of sufficient size to allow a maximum velocity of 400 fpm.

NOTE: *If no return air duct is used, applicable installation codes may limit this cabinet to installation only in a single story structure.*

Filters

The filters can be serviced from the outside by removing the front control panel cover (see Figure 1). Two (2) 20" x 20" x 1" throwaway filters come standard with each unit. Additional 1" and 2" filter options are available as optional accessories. To be notified when filters need changed, a dirty filter switch option is available. See page 41 for the dirty filter switch kit.

FIGURE 1
Front Control Panel Cover

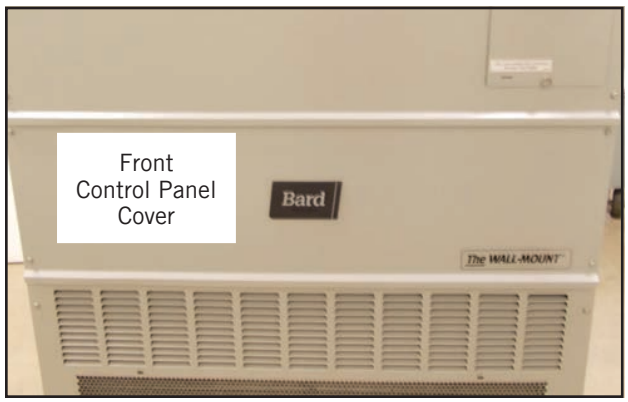

Filter Removal/Installation

1. Remove left filter first by pulling on filter removal slide (see Figure 2).

FIGURE 2
Removing Left Filter

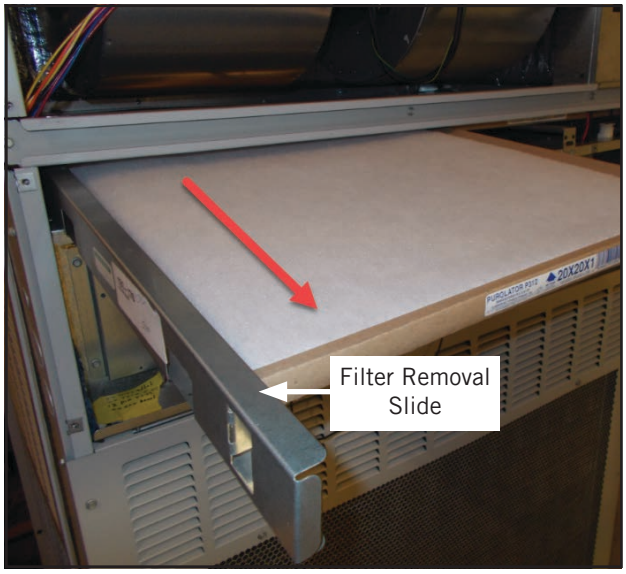

2. Slide second filter to the left around the wires and pull the filter out (see Figure 3).

FIGURE 3
Removing Second Filter

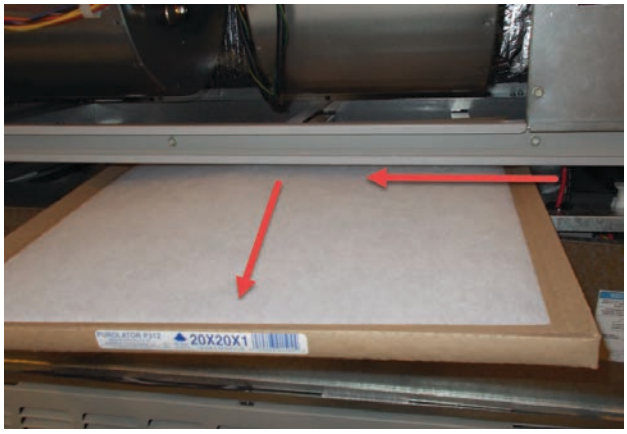

3. Reverse the order for new filter installation.

NOTE: *When installing new filters, make sure that airflow arrows on filters point up.*

Switching Filter Sizes

1. To switch from 1" to 2" filters, start by removing the filter slide and bend the tabs down out of the way (see Figures 4 and 5).

FIGURE 4
Filter Tabs in Up Position

FIGURE 5
Bend Filter Tabs Down

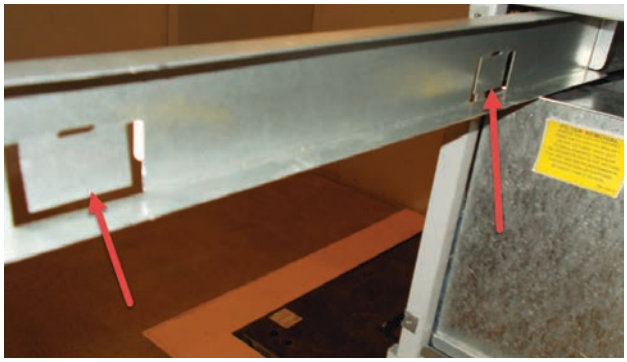

2. Locate the filter support brackets and remove the four (4) screws holding them to the top of the control panel (see Figure 6).

FIGURE 6
Remove Four Screws

3. Pull the brackets out towards the front of the unit. The back of the bracket will slip out of the upper slots at the back of the filter tray.
4. Re-install the filter support brackets into the lower slots at the back of the filter tray (see Figure 7).

FIGURE 7
Re-Install Filter Support Brackets into Lower Slots

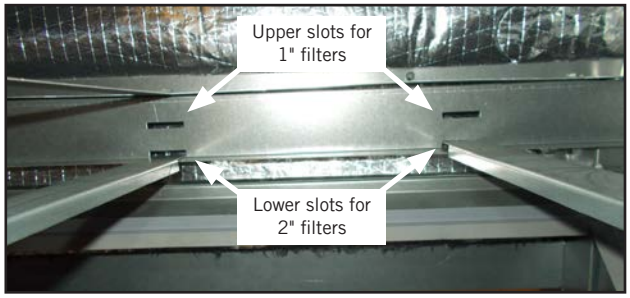

5. Re-install the four (4) screws into the upper screw holes on the filter support brackets. Then bend the tab up out of the way (see Figure 8).

FIGURE 8
Re-Install Screws and Bend Tabs Up

6. Install the right 2" filter first followed by the left filter (see Figures 9 and 10).

NOTE: *When installing new filters, make sure that airflow arrows on filters point up.*

7. Reverse the steps above to switch from 2" to 1" filters.

FIGURE 9
Install Right 2" Filter

FIGURE 10
Install Left 2" Filter

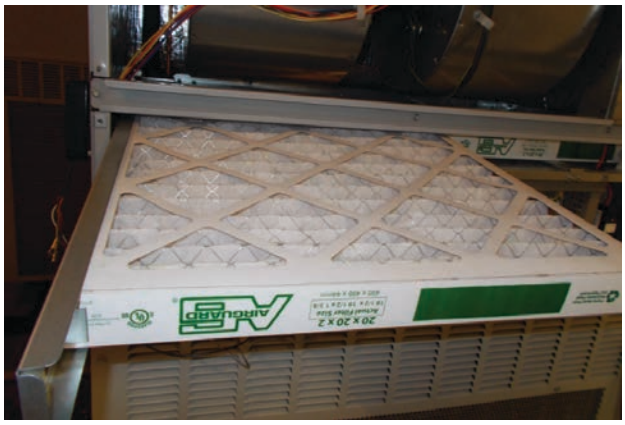

Fresh Air Intake

All units are built with fresh air inlet louvers punched in the side grilles.

If the unit is equipped with a fresh air damper assembly, the assembly is shipped already attached to the unit. The damper blade is locked in the closed position. To allow the damper to operate, remove the two (2) screws in the bottom of the blade (see Figure 11). Remove right side grille to access the damper blade.

FIGURE 11
Fresh Air Damper

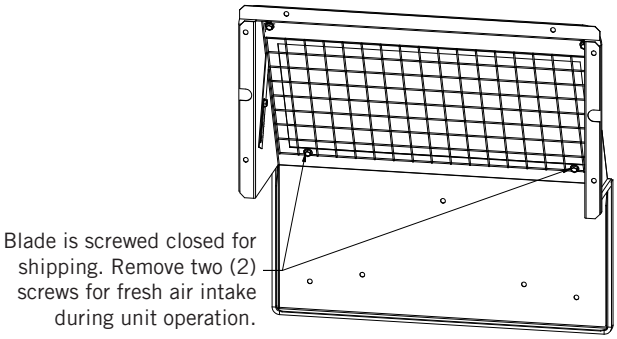

MIS-3977

There is an adjustable slide on the side of the fresh air intake that can be adjusted to limit how far the damper opens so that the amount of fresh air that enters the structure is regulated.

Graphs found on pages 43 and 44 give approximate fresh air amounts based on the slide adjustment setting.

All capacity, efficiency and cost of operation information is based upon the fresh air blank-off plate in place.

The blank-off plate is available upon request from the factory and is installed in place of the fresh air damper shipped with each unit.

Basic Installation Design and Application Planning

Successful unit installations require proper planning and site inspection before installation begins. Before installing the wall mount unit, make sure that all service and airflow clearances are met and that the unit can meet all applicable code and regulation requirements. Provide an inspection of both the inside and outside of the structure by reviewing floorplans and/or visiting the installation site.

Wall Construction

The wall must be inspected to ensure that the weight of the unit can be supported. Be sure to review all applicable construction codes and regulations including seismic requirements. When inspecting wood frame walls, the wall construction must be strong and rigid enough to carry the weight of the unit without transmitting any unit vibration. It is important that the side unit wall mounting lags and optional bottom bracket are supported by structural members inside the wall cavity. Concrete block and brick walls must be thoroughly inspected to ensure that they are capable of carrying the weight of the installed unit. Metal buildings must contain structural components to support the unit weight. If heavily corrugated siding is present, it may need to be trimmed and flashed similar to a window to provide a flat, even surface to attach and seal the unit to the wall. Heavy gauge corrugations that would be present on shipping containers and blast-proof structures may require the installation of a metal plate over the corrugated area. It is important that the unit area is weatherized and sealed to avoid air and water infiltration into the area between the unit and the wall.

Outdoor Area Inspection

Inspect the outdoor area of the jobsite or review construction plans and locate the area where the wall mount is to be installed. The outdoor area must be free from obstructions including fences, bushes and walls that will hinder unit operation regarding outdoor condenser airflow and unit serviceability. Do not install units in enclosed areas that limit the amount of ambient temperature airflow. Warm air will exit the front condenser section of the unit, and outdoor ambient temperature air must be able to enter side intake condenser openings of the unit. Portable or modular building placement must be in a way that the wall mount units have a constant supply of outdoor air for proper unit operation. Make sure that the service panels of the unit are accessible. Inspect wall surfaces for obstructions that could hinder unit installation and servicing including outdoor electrical conduits, junction boxes, wall drains, vent hoods, windows, doors, overhangs and posts.

Condensate Water Drainage

Review all codes and requirements for unit condensate drainage. A clear, flexible PVC drain hose (3/4" ID, 1" OD) extends from the drain pan in the upper section of the unit and extends down to the unit base. An opening is supplied towards the back of the unit base for the drain hose to pass through, and the hose extends 1" to 2" below the unit base. Water removed from the indoor air (condensate) will be expelled from the unit in large amounts during cooling operation through the hose. Units running in cooling operation in cold outdoor below freezing conditions can cause the condensate to freeze after leaving the drain hose. In the event the drain hose is connected to a drain system of some type, it must be an open or vented type system to ensure proper drainage throughout seasonal use.

Indoor Ducted and Non-Ducted Applications

Air distribution inside the structure being conditioned plays an important role in making sure the area is a consistent temperature. Improper air distribution can result in areas being cooler or warmer, electrical equipment not receiving sufficient airflow or occupancy discomfort felt inside an area. Thermostat or indoor temperature sensor placement inside the area being conditioned also plays an important role in indoor climate control.

Indoor Supply Airflow

Indoor installation areas must provide a non-restrictive path for the conditioned supply air to leave supply grilles and registers. Inspect the area to ensure that all indoor portions of the room or rooms will have access to supply air. Ductwork may be used to ensure proper air circulation and all provided ductwork guidelines and clearances must be followed. Non-ducted applications must use a supply louver grille installed over the supply opening inside the room. Be sure to adjust supply deflectors to properly disperse the conditioned supply air to all parts of the room. Avoid closing sections of the supply grilles which would cause unneeded supply duct pressurization.

Indoor Return Airflow

A non-restrictive path for room air returning to the center section of the unit must be provided inside the room. Avoid placing objects including furniture, electronics equipment, equipment racks and cabinets directly in front of the unit return grilles and registers. Bard recommends at least 2' between solid objects and return grilles or registers. Ductwork may be used to ensure proper air circulation and all provided ductwork guidelines and clearances must be followed. Non-ducted applications must use a return louver grille installed over the return opening inside the room.

Ducted Applications

Field fabricated supply and return duct work may be installed inside the structure being conditioned. A short supply and/or return stub duct may be connected to the unit supply and return flanges before unit installation to help with duct connections inside the structure. Supply and return ducts must be properly sized for the design airflow requirement of the equipment. Air Conditioning Contractors of America (ACCA) is an excellent guide to proper sizing. All duct work or portions thereof not in the conditioned space should be properly insulated in order to conserve energy, reduce heat conductivity, and prevent condensation or moisture damage. Refer to Maximum External Static Pressure (ESP) of Operation Table 16 on page 40. Design the duct work according to methods given by the Air Conditioning Contractors of America (ACCA). When duct work is installed in unheated spaces, it should be insulated with a minimum of 1" of insulation. Use insulation with a vapor barrier on the outside of the insulation. Flexible joints should be used to connect the duct work to the equipment in order to keep the noise transmission to a minimum. Ducts through the walls must be insulated and all joints taped or sealed to prevent air or moisture from entering the wall cavity.

All model series require a 1/4" clearance to combustible material for the first 3' of duct attached to the outlet air frame is required. See instructions on page 11 and Figures 14 – 18 (pages 14 – 17) for further details.

⚠ WARNING

Fire hazard.

Maintain minimum 1/4" clearance between the supply air duct and combustible materials in the first 3' of ducting.

Failure to do so could result in fire causing damage, injury or death.

Free Blow Applications

Some installations may not require extensive supply duct work throughout the structure and are referred to as free blow applications. A short field-fabricated supply duct must be used in the wall cavity to transition between the supply collar on the unit and the supply louver grille in the room. The duct must be properly insulated in order to conserve energy, reduce heat conductivity and prevent condensation or moisture damage. All joints must be taped or sealed to prevent air or moisture entering the wall cavity. Follow all clearances including distances to combustible materials and all instructions provided in this manual.

A non-restrictive metallic supply air grille with deflectors is required for free blow applications. Contact the local Bard distributor or visit www.bardhvac.com for ordering information.

A metallic return air grille is required for non-ducted applications. The spacing between louvers on the grille shall not be larger than 5/8". It is recommended that a Bard Return Air Grille Kit is installed that is designed specifically for the wall mount product. Contact the local Bard distributor or visit www.bardhvac.com for ordering information. A field-supplied return grille that meets the 5/8" louver criteria and does not cause the unit to exceed the maximum specified external static pressure (ESP) may be used. If using a return air filter grille, filters must be of sufficient size to allow a maximum velocity of 400 fpm. Filter return air grilles do not filter air being brought into the structure through ventilation options including fresh air dampers, ventilators, economizers and energy recovery ventilators. Be sure to install the return grille with the louvers pointed downward towards the floor. This will help ensure return air is drawn upward from the floor and improve air circulation in the room.

NOTE: *If no return air duct is used, applicable installation codes may limit this cabinet to installation only in a single story structure.*

Thermostat or Indoor Temperature Sensor Placement

The location and installation of the thermostat or temperature sensor that monitors indoor temperature is very important regarding unit operation. Avoid placing the thermostat in an area exposed to direct sunlight or air from doorways leading outdoors. Use a piece of insulating material to close off conduit openings or holes in the wall surface for wire entry into the thermostat or temperature sensor. This will help avoid non-conditioned air from entering the thermostat and effecting temperature and/or humidity readings. As common practice, the thermostat or temperature sensor should measure the temperature of the air being returned to the unit, and not the conditioned air being supplied by the unit. Placing the thermostat or temperature sensor near a return air opening will normally result in optimal unit performance.

Unit Installation

Make sure to have the proper tools at the work site that are needed for unit installation. The following steps are provided to ensure the unit is installed properly to the wall surface, and that the unit will provide years of service with minimal service requirements.

Materials/Tools List

Additional hardware and miscellaneous supplies are needed for installation. These items are field supplied and must be sourced before installation. This list also includes tools needed for installation.

- Appropriate safety gear including gloves and safety glasses
- 5/16" hex bit with drill driver
- Phillips head screwdriver
- Small straight (thermostat) screwdriver
- Tape measure
- Leveling device
- Two (2) tubes of caulk and caulk gun
- Utility knife
- Tools for cutting holes in the wall surface (if needed)
- Electrical components and wiring along with electrical tools
- Multimeter
- Wall fasteners for side flanges, bottom mounting bracket and top rain flashing
- Duct tape and/or other duct sealing materials

Wall Preparation

1. Two holes for the supply and return air openings must be cut through the wall as shown in Figure 14 on page 14. Be sure the openings are square and level. Follow all clearances including distances to combustible materials and all instructions provided in this manual.
2. Review all electrical requirements provided in this manual and plan out electrical entrances into the building. Also plan electrical conduit routing and thermostat placement, if necessary.
3. Install necessary duct work and prepare the openings for unit installation.
4. Clean the exterior wall where the unit is to be installed and make sure it is able to provide a smooth, level, debris-free surface. Remove all construction debris from the supply, return and electrical hole cutting process.

Wall Mount Installation to Wall Surface

1. Remove packaging from unit and make sure the unit is not damaged before installation. A top rain flashing is supplied for field use and is mounted to the back of the unit for shipping. Remove the rain flashing before locating the unit against the wall. Top rain flashing is required to avoid water entering the area behind the unit that is against the wall. A bottom mounting bracket, attached to the skid for shipping, is provided for ease of installation but is not required. Review all requirements listed on unit labels and on serial plate located on the side of the unit.
2. Locate and mark bolt hole locations and bottom mounting bracket location. Install bottom mounting bracket with field-supplied fasteners to wall if it is to be used (optional). Bracket must be level and installed in the correct location to help support the unit during the installation process (see Figure 14).
3. Position the wall mount unit close to the wall surface where it will be installed. Install rain flashing at the top of the unit facing the wall by hooking the hem bend into the rear bend of the unit top (see Figure 14).
4. Apply a liberal amount of caulk on left and right cabinet side wall mount brackets and back of top rain flashing. Place unit back surface flush against wall. Unit must be level to ensure proper condensate drainage. Optional bottom bracket may be used to help support the unit.
5. Units are secured to the wall by using field-supplied fasteners along each side of the wall mount through the built-in wall mounting brackets. It is the responsibility of the installer to select the proper fastener to secure the unit to the wall based on wall construction and applicable building codes. Typical installations may include 5/16" fasteners with 7/8" diameter flat washers. Be sure unit is securely mounted and all weight-bearing fasteners are attached to the weight supporting structural members of the wall.
6. Apply a bead of caulk between the back of the unit top and the front surface of the top rain flashing (see Figure 14).
7. Connect unit duct work from the inside of the building following all clearances and instructions provided. For additional mounting rigidity, the return air and supply air frames or collars can be drilled and screwed or welded to the structural wall itself (depending upon wall construction). Be sure to use code approved duct tape or other sealing materials to seal the duct work to the unit.
8. On side-by-side installations, maintain a minimum of 20" clearance on both sides to allow access to heat strips and to provide proper airflow to the outdoor coil. Additional clearance may be required to meet local or national codes.

TABLE 1
Clearance Required for Service Access and Adequate Condenser Airflow

Model	Left Side	Right Side	Discharge – Front
W42AC W48AC W60AC W72AC	20"	20"	10'

* For vent installation and removal, one side of the unit requires 45" clearance in the vent area. See Figure 12 for clarity.

See Specifications Sheet S3583.

TABLE 2
Minimum Clearances Required to Combustible Materials

Model	Supply Air Duct (1st 3')	Cabinet
W42AC W48AC W60AC W72AC	1/4"	0"

FIGURE 12
Vent Installation/Removal Clearance Required

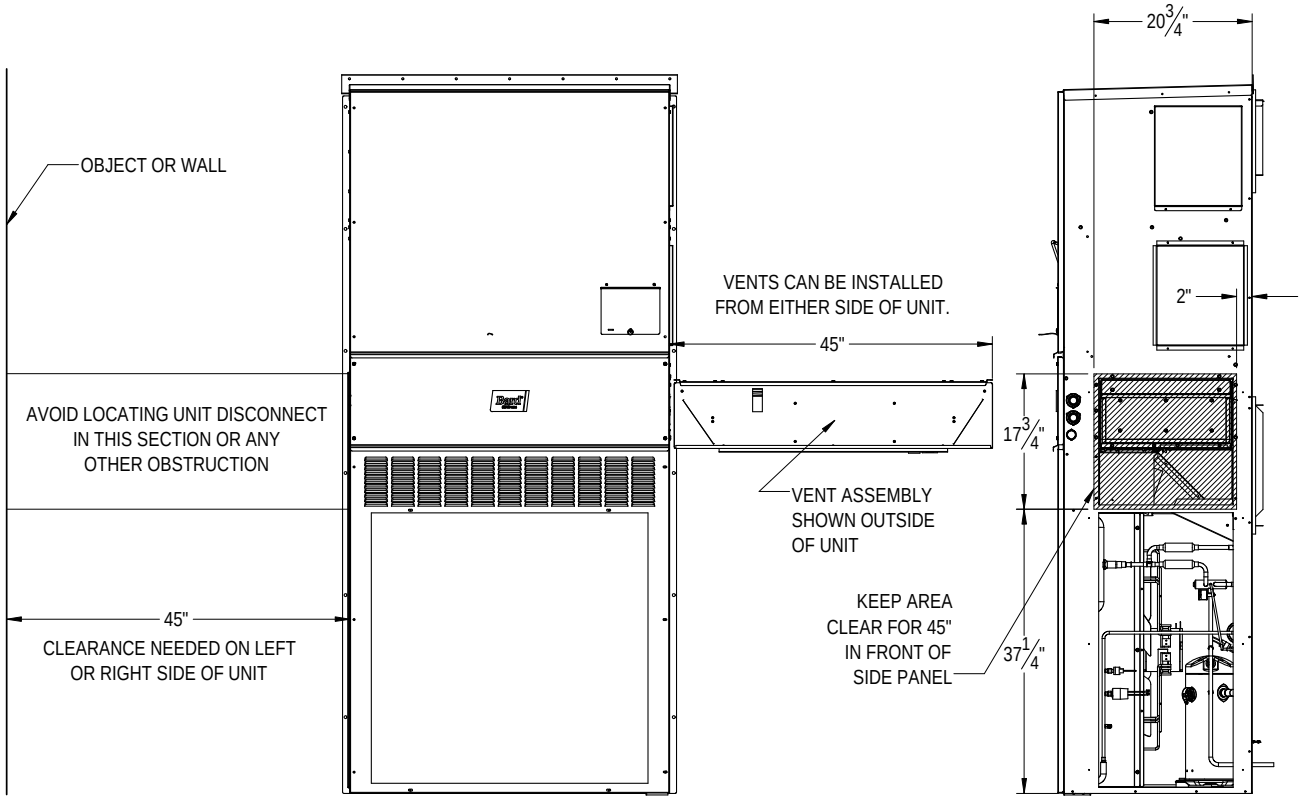

MIS-4042 A

FIGURE 13
Unit Dimensions

	Width (W)	Depth (D)	Height (H)	Supply		Return														
				A	B	C	B	E	F	G	I	J	K	L	M	N	O	R	S	T
W42AC W48AC	42.00	25.52	84.75	9.88	29.88	15.88	29.88	43.88	12.63	39.06	30.06	43.25	26.94	55.59	52.59	8.82	43.00	1.44	16.00	1.88
W60AC W72AC	42.00	25.52	92.88	9.88	29.88	15.88	29.88	43.88	12.63	45.00	30.06	49.25	35.06	61.72	58.72	8.82	43.00	1.44	16.00	10.00

All dimensions are in inches. Dimensional drawings are not to scale.

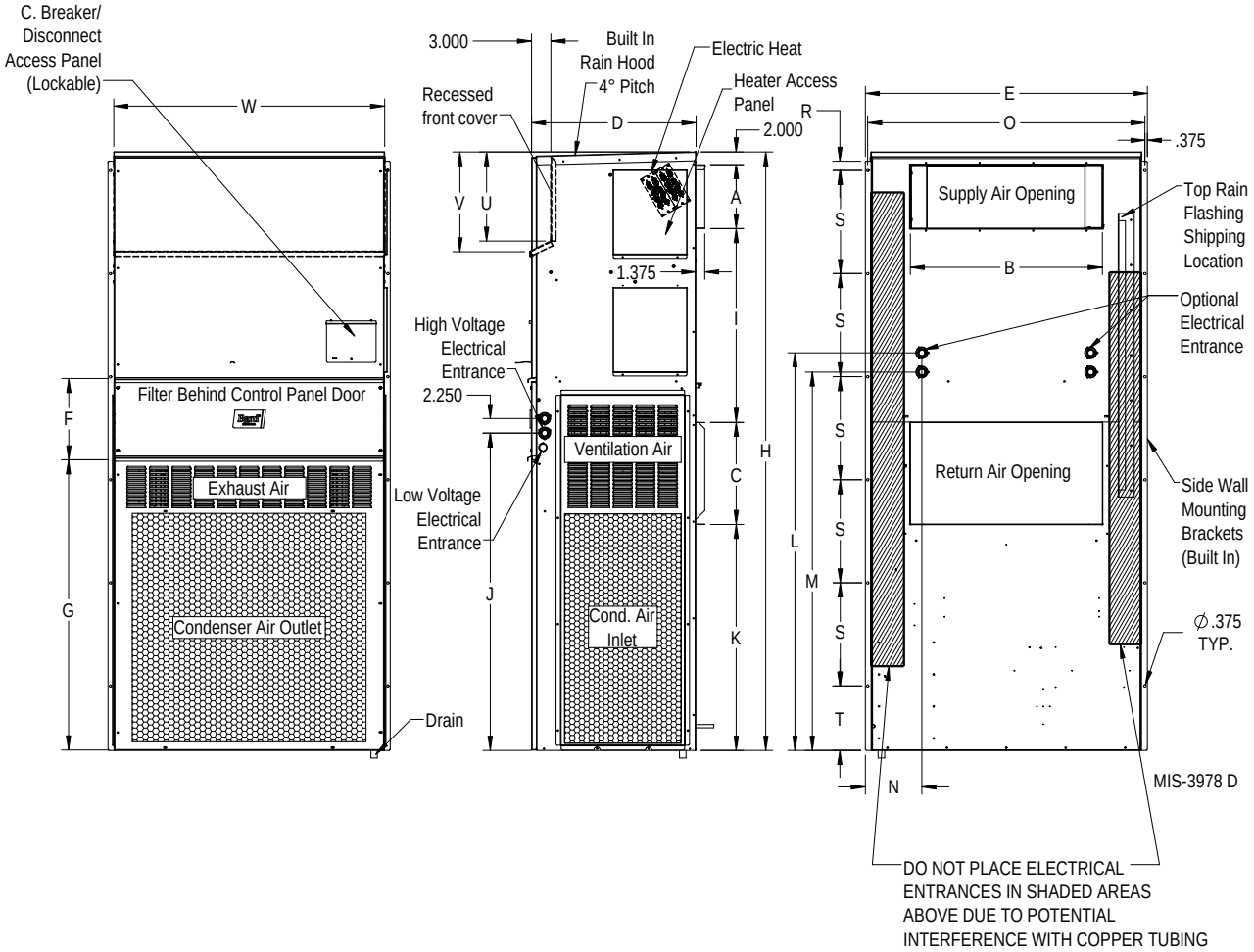

FIGURE 14
Mounting Instructions

UNITS	REQUIRED DIMESIONS	A	B	C	D	E	F	G
W42AC-W48AC UNITS	REQUIRED DIMESIONS TO MAINTAIN 1/4" MIN. CLEARANCE FROM COMBUSTIBLE MATERIALS	30 1/2	10 1/2	6 1/4	1 1/4	29 3/4	16	1 7/8
	REQUIRED DIMENSIONS TO MAINTAIN RECOMMENDED 1" CLEARANCE FROM COMBUSTIBLE MATERIALS	32	12	5 1/2	2	29	16	1 7/8
W60AC-W72AC UNITS	REQUIRED DIMESIONS TO MAINTAIN 1/4" MIN. CLEARANCE FROM COMBUSTIBLE MATERIALS	30 1/2	10 1/2	6 1/4	1 1/4	29 3/4	16	9 7/8
	REQUIRED DIMENSIONS TO MAINTAIN RECOMMENDED 1" CLEARANCE FROM COMBUSTIBLE MATERIALS	32	12	5 1/2	2	29	16	9 7/8

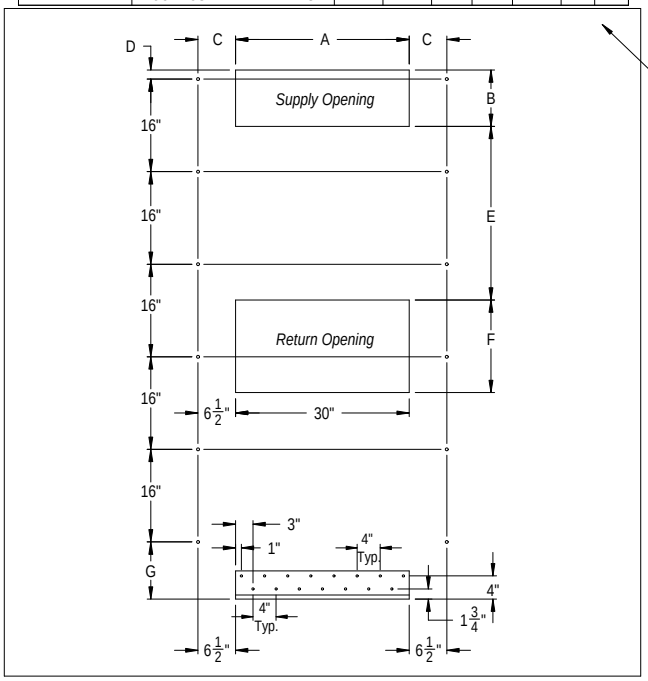

Wall Opening and Hole Location View

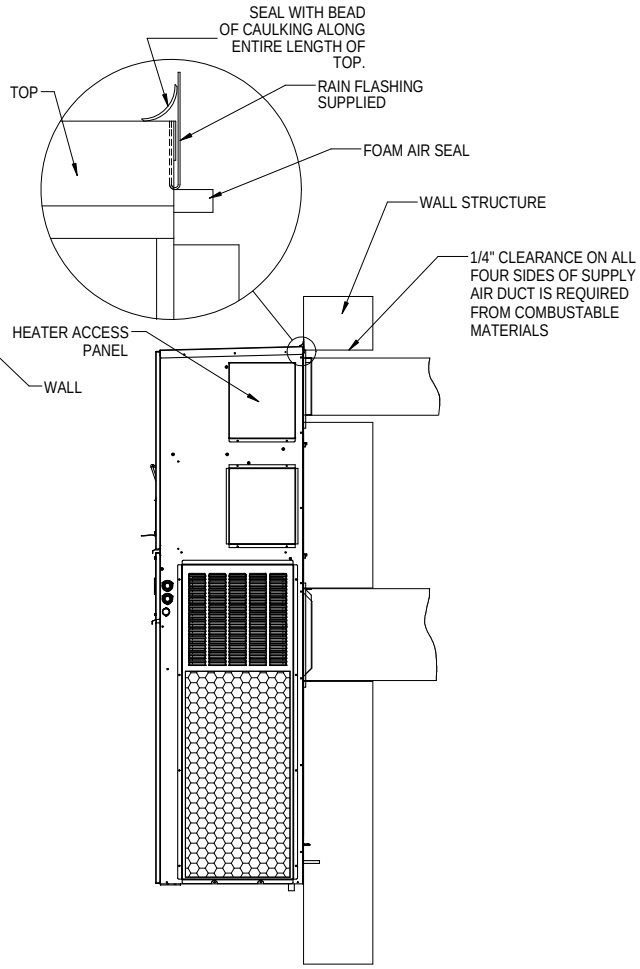

Right Side View

MIS-3980 C

FIGURE 15
Electric Heat Clearance

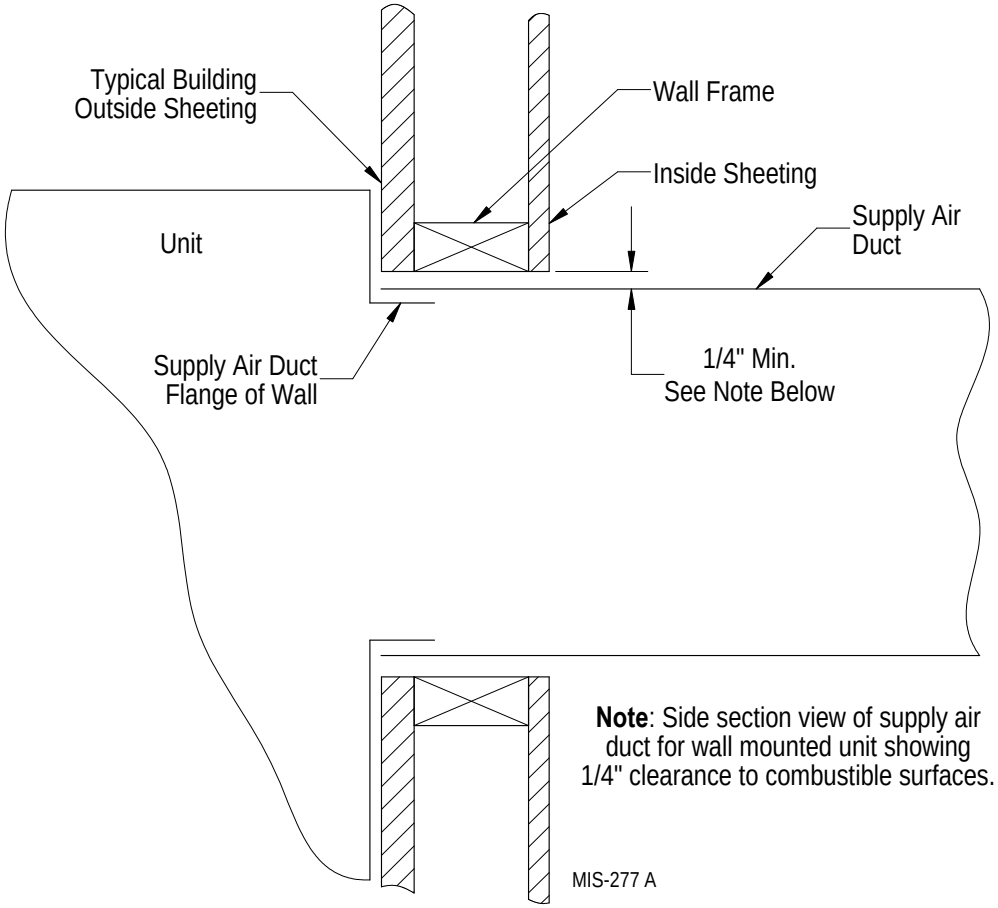

⚠ WARNING

Fire hazard.

Maintain minimum 1/4" clearance between the supply air duct and combustible materials in the first 3' of ducting.

Failure to do so could result in fire causing damage, injury or death.

FIGURE 16
Wall Mounting Instructions

See Figure 14 Mounting Instructions

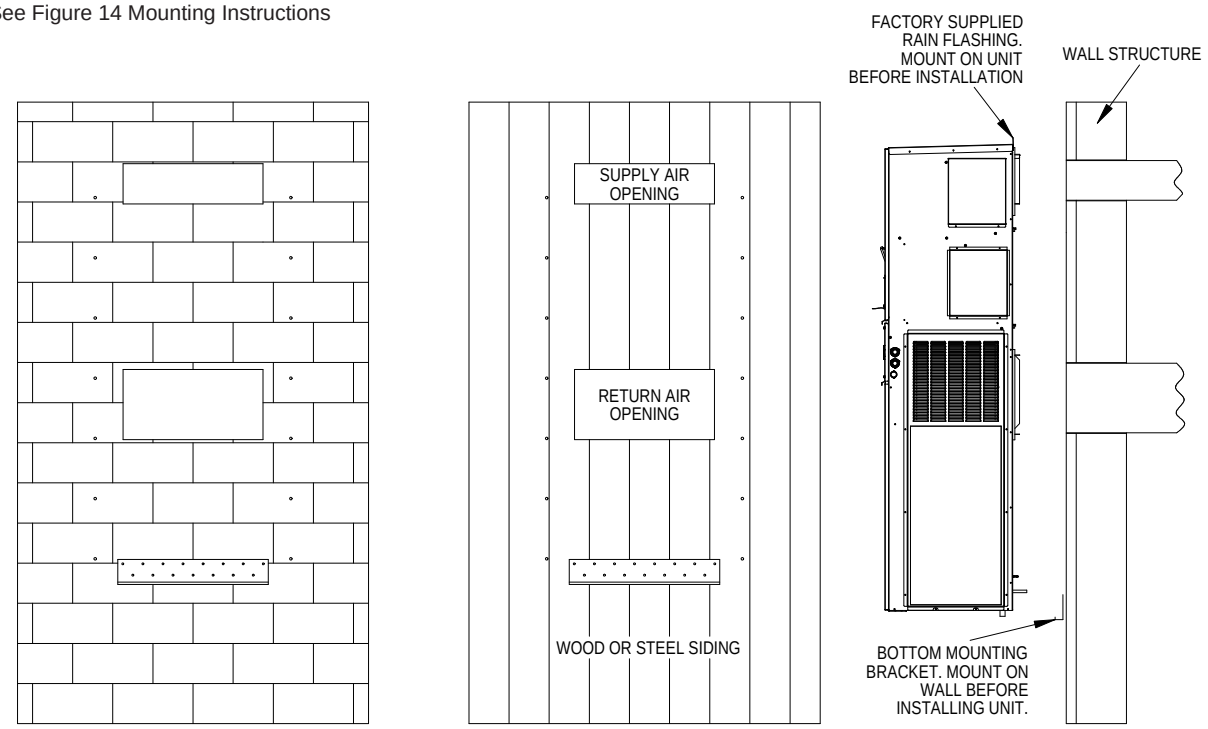

MIS-3981 B

FIGURE 17
Wall Mounting Instructions

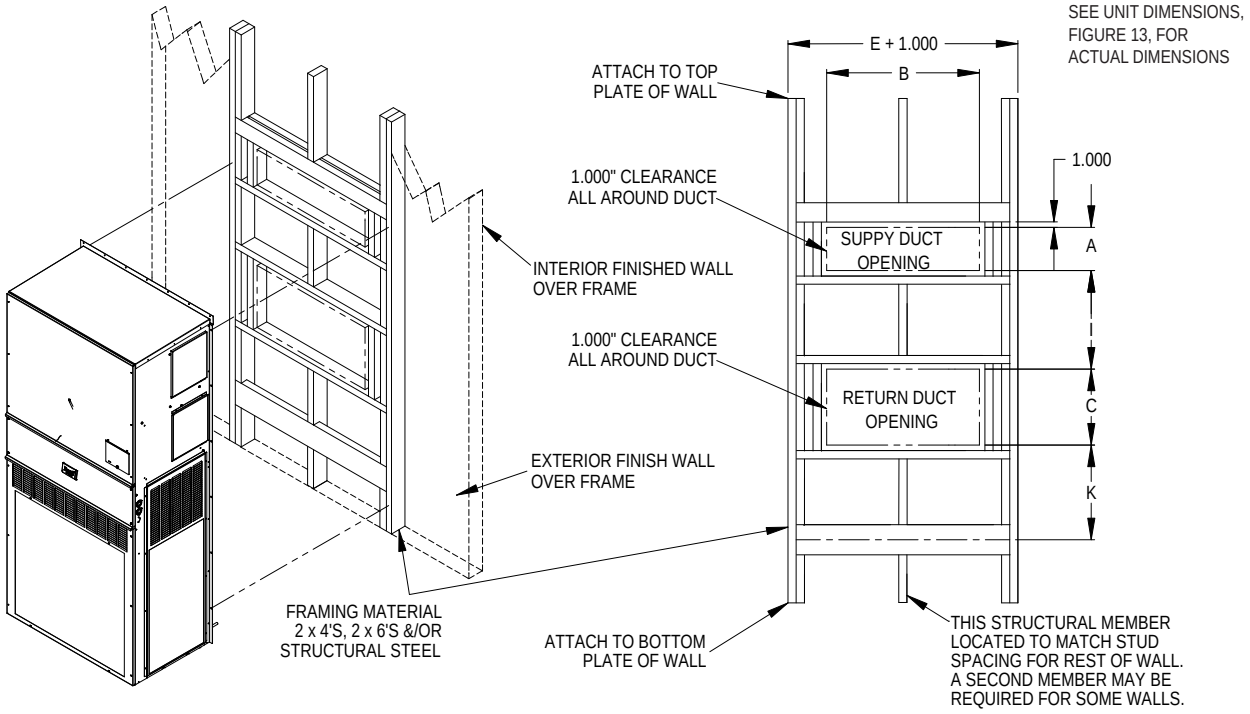

MIS-3982 B

FIGURE 18
Common Wall Mounting Installations

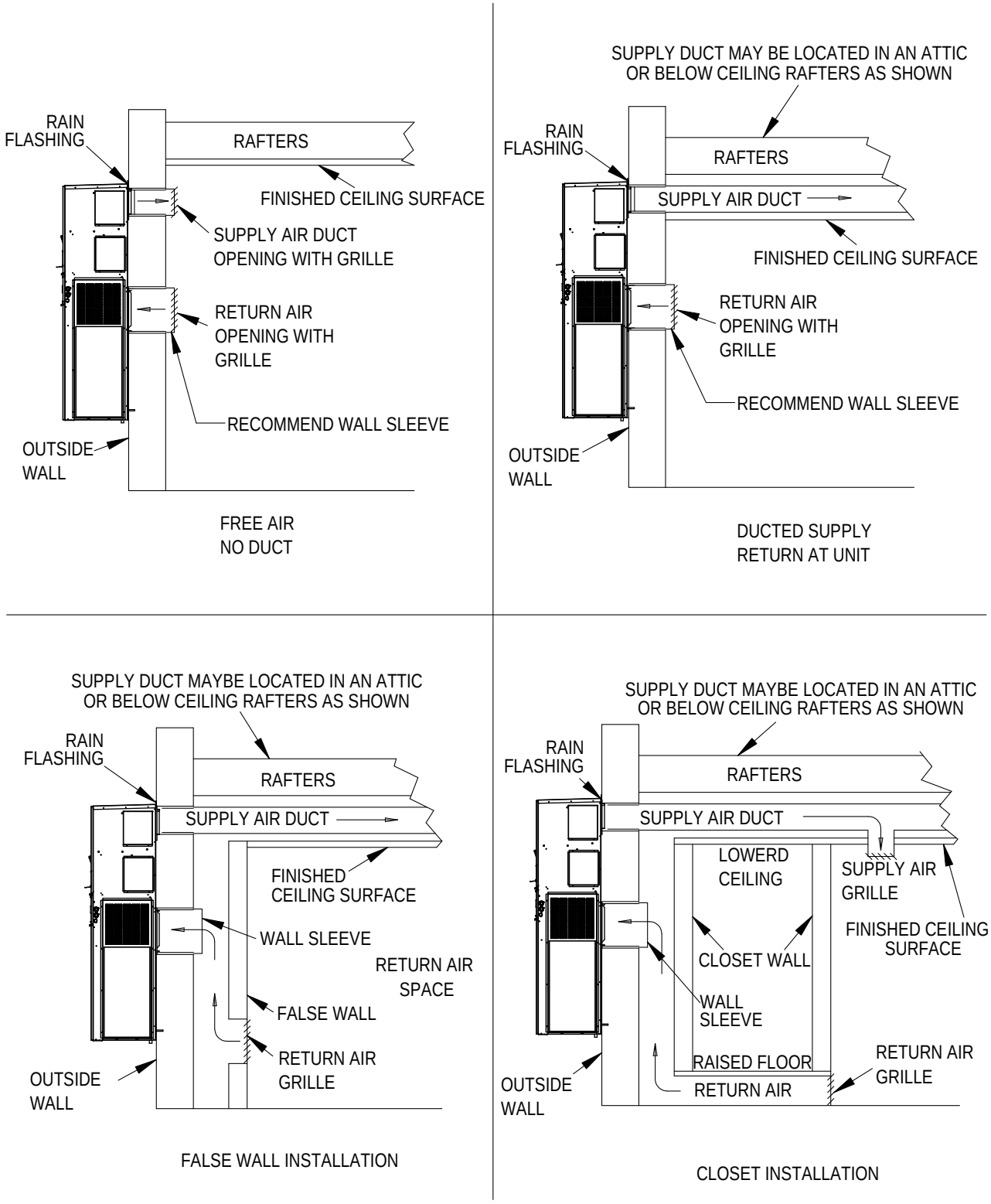

Wiring – Main Power

⚠ WARNING

Electrical shock hazard.

Do not operate this equipment without an earth ground attached and always disconnect the remote electric power supplies before servicing.

Electrical shock can result in serious injury or death.

Main electrical power must be supplied to the unit from a clean, reliable power source. Verify voltage being supplied to the unit is consistent during all times of the day and within the range specified for the unit in the unit specifications and on the unit serial plate. Voltage must be measured at the field power connection point in the unit and while the unit is operating at full load (maximum amperage operating condition).

NOTE: *In applications where a field-supplied transformer is used to step down a higher incoming voltage, the center leg must be grounded when high resistance grounding is used.*

Refer to the unit serial plate and unit specifications for wire sizing information and maximum fuse or circuit breaker size. Each outdoor unit is marked with a "Minimum Circuit Ampacity". This means that the field wiring used must be sized to carry that amount of current. Depending on the installed KW of electric heat, there may be two field power circuits required. If this is the case, the unit serial plate will so indicate.

All models are suitable only for connection with copper wire. Each unit and/or wiring diagram will be marked "Use Copper Conductors Only". These instructions must be adhered to. Refer to the National Electrical Code (NEC) for complete current carrying capacity data on the various insulation grades of wiring material. All wiring must conform to NEC and all local codes.

The electrical data on the serial plate, in the unit specifications and also in Tables 12A and 12B on pages 33 and 34 list fuse and wire sizes (75°C copper) for all models including the most commonly used heater sizes. Also shown are the number of field power circuits required for the various models with heaters. The unit rating plate lists a "Maximum Time Delay Relay Fuse" or circuit breaker that is to be used with the equipment. The correct type and size must be used for proper circuit protection and also to ensure that there will be no nuisance tripping due to the momentary high starting current of the compressor motor.

Three phase models must have proper phasing. A phase monitor is included in all three phase models, and will indicate improper phasing during a call for cooling (24VAC at Y1 terminal). See provided information included in this document regarding the phase monitor.

High Voltage Connections

Route field wires under the field wire shield shown in Figure 19. (The field wire shield can be removed for

FIGURE 19
High Voltage Connections

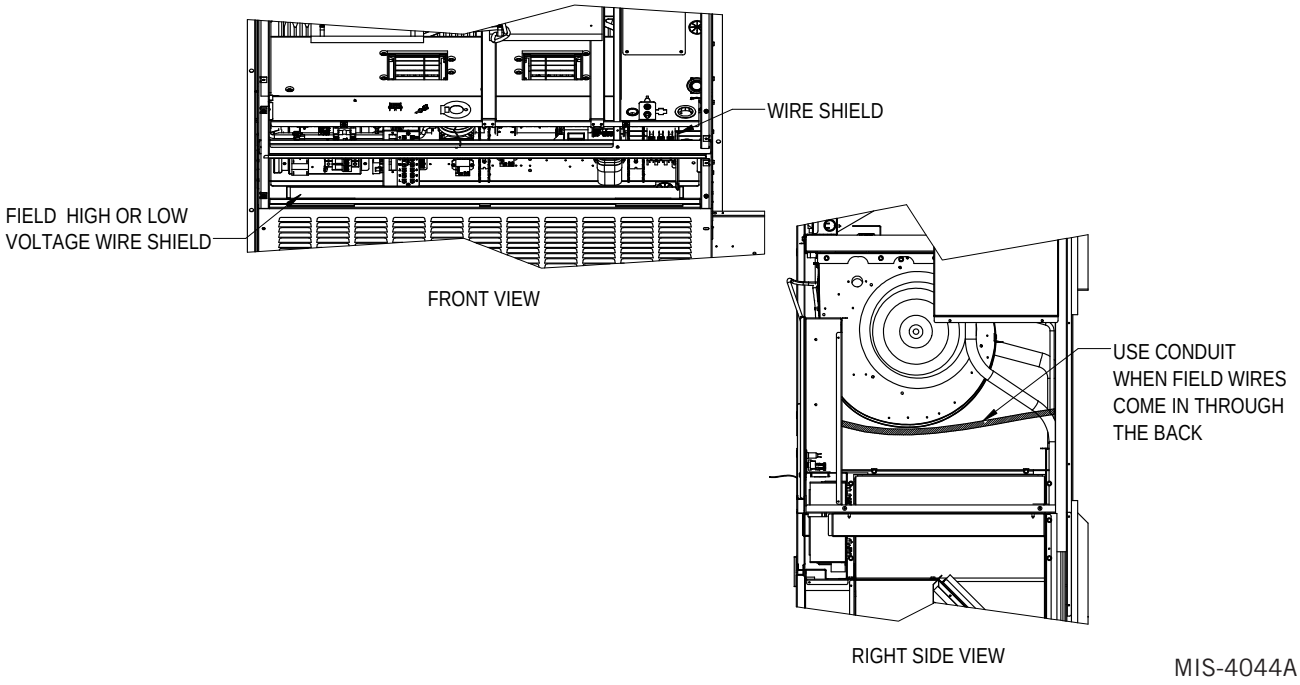

wire installation.) If field power is supplied to the left side of the unit, run the high voltage wires under the shield and to the right of the wire shield next to the compressor contactor and up into the upper control panel where the connections are made. If field power is supplied to the right of side of the unit, the low voltage wires can be run under the field wire shield to access the low voltage terminal strip.

When field wires are supplied through the back of the unit, flexible conduit must be extended through the back of the unit and terminate into the knock-outs on the upper control panel (see Figure 19).

Wiring – Low Voltage

All 230/208V 1 phase and 3 phase equipment have dual primary voltage transformers. All equipment leaves the factory wired on 240V tap. For 208V operation, reconnect from 240V to 208V tap. The acceptable operating voltage range for the 240 and 208V taps are:

Tap: 240 Range: 253 – 216
Tap: 208 Range: 215 – 197

NOTE: *The voltage should be measured at the field power connection point in the unit and while the unit is operating at full load (maximum amperage operating condition).*

For low voltage wiring, an 18 gauge copper, color-coded cable is recommended. See Table 8 on page 21 for more information.

Low Voltage (24VAC) Connections

These units use a 24-volt AC low voltage circuit.

C terminal is the *24VAC common and is grounded.*

G terminal is the *indoor blower input*.

Y1 terminal is the *1st Stage input for cooling.*

Y2 terminal is the *2nd Stage compressor input for cooling* (if equipped with an economizer) or *Y2 disables Balanced Climate mode if the Y1-Y2 jumper is removed* (see page 25).

B/W1 terminal is the *1st stage electric heat*.

W2 terminal is the *2nd stage heat* (if equipped).

A terminal is the *ventilation input*. This terminal energizes any factory-installed ventilation option and indoor blower.

D terminal is the *dehumidification input*. If installed, this terminal energizes any factory-installed dehumidification option.

L terminal is *24 volt alarm active output*.

For units equipped with an alarm relay:

1 terminal is the *normally closed contact on the relay.*
2 terminal is the *normally open contact on the relay.*
3 terminal is the *common contact on the relay.*

See Table 3 for additional low voltage connections on auxiliary terminal strip.

TABLE 3
Additional Low Voltage Connections (if applicable)

Terminal	Unit	Description
9	V Control Option Only	Discharge Air Sensor, 10K Ohm
10	V Control Option Only	Discharge Air Sensor, 10K Ohm
11	F, V Control Options	Filter Switch, Normally Open Contact
12	F, V Control Options	Filter Switch, Normally Open Contact
13	V Control Option Only	Blower Airflow Switch, Normally Open Contact
14	V Control Option Only	Blower Airflow Switch, Normally Open Contact
15	V Control Option Only	Compressor Current Sensor, Normally Open Contact
16	V Control Option Only	Compressor Current Sensor, Normally Open Contact

Unit Shutdown Feature (Standard on All Models)

The RT terminal is the 24VAC transformer output, and the R terminal is the 24VAC hot terminal for the operation of the equipment. RT and R are connected with a brass jumper bar which can be removed and RT and R connected to an external NC (normally closed) contact such as a fire/smoke detector that will cause shutdown of the equipment upon activation.

Balanced Climate™ Feature (Standard on All Models)

All units are equipped with the capability of running in Balanced Climate mode. This mode is designed to enhance the comfort level by reducing the indoor airflow amount and extending the run time to help extract more humidity during cooling operation. The Y1 terminal is the 24VAC input for Balanced Climate compressor cooling operation. The Y2 terminal is the 24VAC input for compressor cooling standard operation. Y1 and Y2 are connected with a brass jumper bar which can be removed to enable Balanced Climate mode. Units with an economizer will not have the brass jumper installed. Refer to vent manuals for instructions on how Balanced Climate works with each vent.

NOTE: *Units with mechanical dehumidification require an additional connection to be made when enabling Balanced Climate. Refer to dehumidification supplemental instructions for this step.*

To operate in Balanced Climate mode, a 2-stage cooling thermostat is required. The lower indoor airflow operation is overridden by utilizing a 2-stage thermostat. If the call for cooling is not satisfied within a given time frame or temperature differential (specified by the thermostat), the thermostat will send a signal to Y2 which then increases the blower speed

back to the selected speed. See pages 35 – 36 for blower speed selection options.

Refer to page 25 for additional Balanced Climate requirements and limitations.

Dehumidification Feature (Optional)

The D terminal is the 24VAC input for dehumidification operation on dehumidification hot gas reheat equipped units. When 24VAC is applied to the D terminal, a 3-way valve solenoid is energized. The reheat coil located behind the evaporator coil is then active to reheat the supply air during cooling mode. This allows humidity to be removed from the air entering the unit without a large amount of sensible cooling capacity. During dehumidification, the indoor blower speed is reduced to help with the humidity removal. A humidity sensing thermostat or humidistat is required to control dehumidification operation.

Ventilation Features (Optional)

See ventilation instructions provided with unit for low voltage wiring.

Low Ambient Control (LAC)

The low ambient control is a pressure switch that is attached to the liquid line of the system and monitors high side pressure. Operation of the LAC occurs as outdoor temperatures drop below 60°F. LAC operation cycles the condenser fan on/off based on pressure changes caused by outdoor temperature changes.

Outdoor Temperature Switch and Freeze Protection Thermostat

An outdoor temperature switch and an evaporator freeze protection thermostat is supplied with all units that have a low ambient control. The outdoor switch disables Balanced Climate mode (if enabled) when the temperature drops below 50°F. This prevents potential evaporator coil freeze up issues. For units with mechanical dehumidification, this switch must remain disconnected when Balanced Climate mode is not being used. Refer to unit wiring diagram. The freeze thermostat cuts out compressor operation if the evaporator begins to freeze up.

Alarm Relay Feature (Controls Option)

The alarm relay provides a set of NO (normally open) and NC (normally closed) pilot duty contacts that operate when the compressor control module locks out compressor operation because of a high or low system refrigerant pressure event.

DDC Controls Feature (Controls Option)

The DDC controls option provides additional sensors that can be used with a field-supplied advanced logic controller. The DDC controls option contains the following installed components:

Dirty Filter Switch Indicator (DFS)

The switch is adjustable and measures pressure drop across the unit filter surface. When pressure drop is higher than the switch setting, NO contacts are provided to indicate the filter needs to be serviced. Refer to page 36 for instructions on making switch adjustments.

Discharge Air Sensor

The discharge air sensor provides a temperature reading of the supply air leaving the unit. The sensor is a 10K OHM @ 77°F measuring device. It is installed in the supply airstream in the heater bracket.

Airflow Switch

The airflow switch measures the pressure differential between the blower inlet and outlet. It is located directly above the blower partition. Relay contacts (NO) are provided for the DDC controls option that indicates the indoor blower assembly needs to be serviced.

Compressor Current Sensor

The compressor current sensor indicates when the compressor is operational by measuring amp draw. It is located inside the unit control panel. Relay contacts (NO) are provided to indicate the compressor is not operating.

See Table 4 for low voltage connections for DDC control.

TABLE 4
Low Voltage Connections for DDC Control

	Standard Units	Units w/ Economizers
Fan Only	Energize G	Energize G
1st Stage Cooling Mode/ Balanced Climate	Energize Y1, G	Energize Y1, G
2nd Stage Cooling Mode	Energize Y2 to overide Balanced Climate mode when Y1-Y2 jumper is removed	Energize Y1, Y2, G
1st Stage Heating	Energize B/W1	Energize B/W1
2nd Stage Heating (if employed)	Energize B/W1, W2	Energize B/W1, W2
Ventilation	Energize A	Energize A
Dehumidification (if employed)	Energize D	Energize D

TABLE 5
Wall Thermostats

Part Number	Predominate Features
8403-060 (1120-445)	3 stage Cool; 3 stage Heat; Electronic Programmable/Non-Programmable; HP or Conventional; Auto or Manual changeover; Dehumidification Output
8403-089 (T4 Pro)	1 stage Cool, 1 stage Heat – Heat Pump; 1 stage Cool, 1 stage Heat – Conventional; Programmable/Non-Programmable Electronic; Auto or Manual changeover
8403-090 (T6 Pro)	2 stage Cool, 3 stage Heat – Heat Pump; 2 stage Cool, 2 stage Heat – Conventional; Programmable/Non-Programmable Electronic; Auto or Manual changeover
8403-091	1 stage Cool, 1 stage Heat; Non-Programmable; FEMA use
8403-092 (T6 Pro Wi-Fi)	2 stage Cool, 3 stage Heat – Heat Pump; 2 stage Cool, 2 stage Heat – Conventional; Programmable/Non-Programmable Electronic; Auto or Manual changeover; Wi-Fi

TABLE 6
Humidity Controls

Part Number	Predominate Features
8403-100* (H6062A1000)	Electronic humidistat DPST Humidity range 10-90% with adjustable stops
8403-047 (H200-10-21-10)	Electronic dehumidistat SPST, closes-on-rise Humidity range 10-90% with adjustable stops

* If using Honeywell HumidiPRO (H6062A1000) 8403-100 humidistat, it must be configured for dehumidification in the menu.

TABLE 7
CO_2 Controllers

Part Number	Predominate Features
8403-096	Normally Open SPST relay closes-on-rise 24V dual wave length sensor. Default setting 950ppm, adjustable to 0-2000ppm Default off setting 1000ppm, adjustable to 0-200 ppm can be calibrated

TABLE 8
Thermostat Wire Size

Transformer VA	FLA	Wire Gauge	Maximum Distance In Feet
55	2.3	18 gauge 16 gauge 14 gauge 12 gauge	60 100 160 250

FIGURE 20
Programmable Thermostat Connections

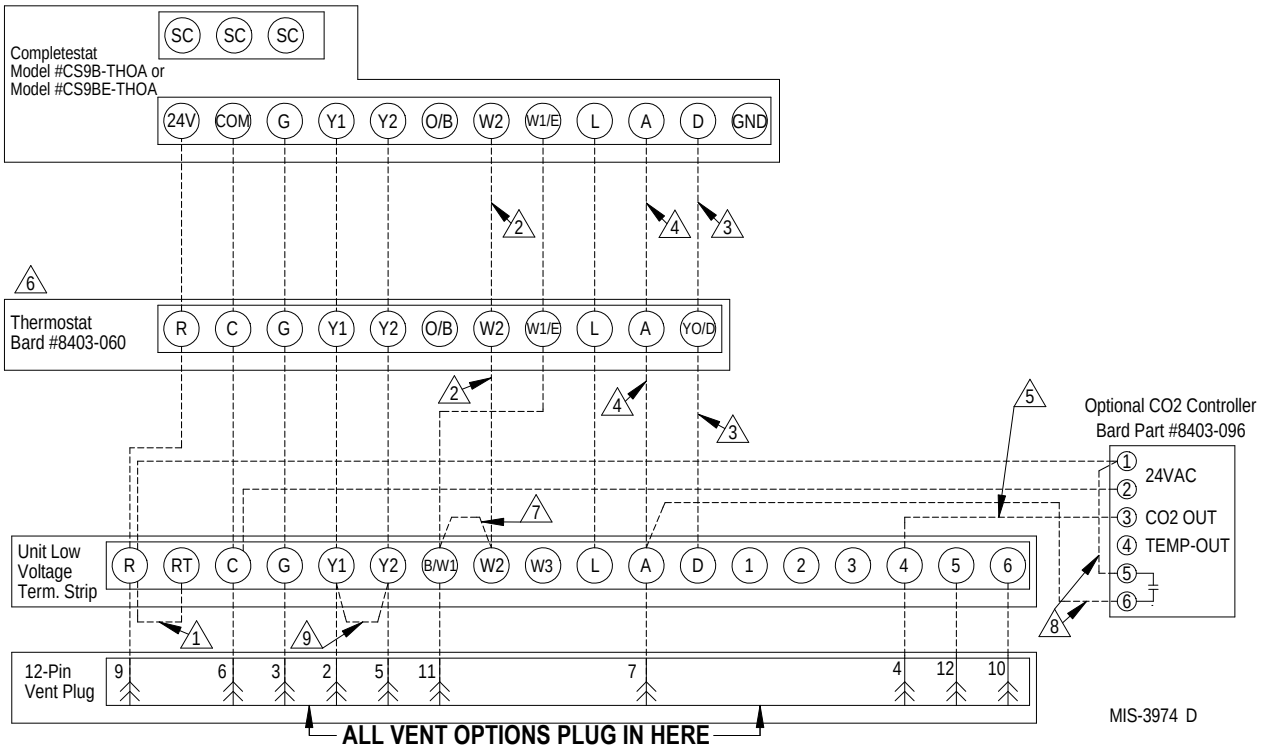

If not equipped with a ventilation option to plug in, a jumper plug must be installed.

1. Factory installed jumper. Remove jumper and connect to N.C fire alarm circuit if emergency shutdown required.
2. Wire not needed below 15KW.
3. Wire required for dehumidification models only.
4. Do not connect "A" from thermostat if optional CO2 controller is used
5. 0-10 VDC modulating C02 control signal for modulating ventilation control (optional for ECON only - see vent instruction manuals)
6. Change model configuration from heat pump to heat/cool. Must be configured to programmable and fan set to be programmed fan for the "A" output to function during scheduled occupied periods. Must be configured for multi-stage for Y1 output to be active 1st stage cooling. For dehumidification, must be configured for "No Economizer" for YO/D to be active for humidity control.
7. Install jumper for 1 stage electric heat on units with more than 10KW
8. Do not add these wires if setting up for modulating control. See note 5.
9. Factory installed jumper. Remove jumper to activate Balanced Climate™ mode. A 2-stage thermostat is recommended for Balanced Climate mode.

FIGURE 21
Non-Programmable Thermostat Connections

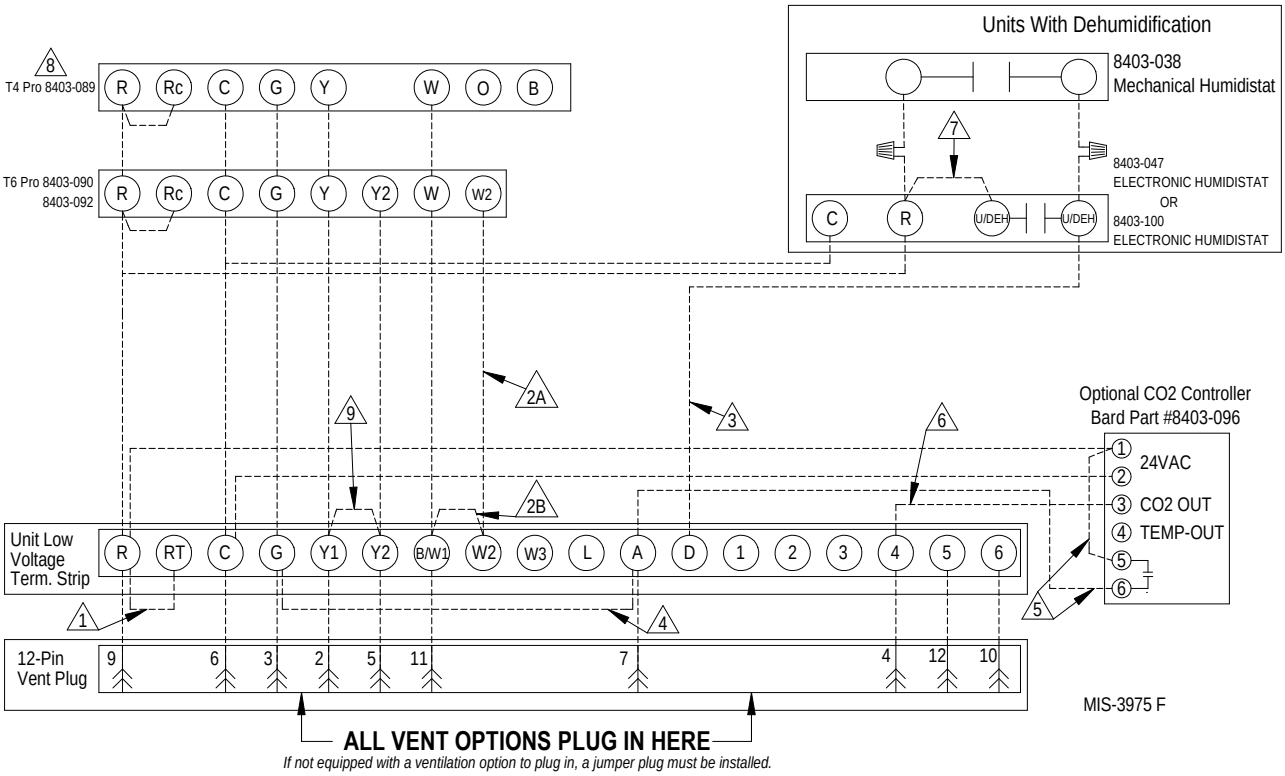

If not equipped with a ventilation option to plug in, a jumper plug must be installed.

1. FACTORY INSTALLED JUMPER. REMOVE JUMPER AND CONNECT TO N.C FIRE ALARM CIRCUIT IF EMERGENCY SHUTDOWN REQUIRED.
2A. WIRE NOT NEEDED BELOW 15KW.
2B. INSTALL JUMPER FOR 1 STAGE ELECTRIC HEAT ON UNITS WITH MORE THAN 10KW.
3. WIRE REQUIRED FOR DEHUMIDIFICATION MODELS ONLY.
4. FOR VENT OPERATION, ADD JUMPER IF OPTIONAL CO2 CONTROLLER IS NOT USED. VENT WILL RUN WHILE BLOWER IS ENERGIZED. FOR ECON & CRV-V AN ADDITIONAL WIRE CHANGE IS REQUIRED SEE INSTALL MANUAL.
5. DO NOT ADD THESE WIRES IF SETTING UP FOR MODULATING CONTROL. SEE NOTE 6.
6. 0-10 VDC MODULATING CO2 CONTROL SIGNAL FOR MODULATING VENTILATION CONTROL (OPTIONAL FOR ECON ONLY) - SEE VENT INSTALLATION MANUAL.
7. JUMPER NEEDS ADDED.
8. THERMOSTAT WILL NOT WORK WITH UNITS EQUIPPED WITH ECONOMIZERS.
9. FACTORY INSTALLED JUMPER. REMOVE JUMPER TO ACTIVATE BALANCED CLIMATE™ MODE. A 2-STAGE THERMOSTAT IS RECOMMENDED FOR BALANCED CLIMATE MODE. Y1 Y2 JUMPER NOT PRESENT IF ECONOMIZER IS FACTORY INSTALLED. UNITS WITH ECONOMIZERS HAVE BALANCED CLIMATE JUMPER IN ECONOMIZER, REFER TO ECONOMIZER MANUAL.
10. HUMIDISTAT 8403-100 WILL NEED TO BE CONFIGURED FOR DEHUMIDIFICATION IN THE MENU. SEE USER'S MANUAL.

NOTICE

These units require R-410A refrigerant and polyol ester oil.

General

1. Use separate service equipment to avoid cross contamination of oil and refrigerants.
2. Use recovery equipment rated for R-410A refrigerant.
3. Use manifold gauges rated for R-410A (800 psi/250 psi low).
4. R-410A is a binary blend of HFC-32 and HFC-125.
5. R-410A is nearly azeotropic—similar to R-22 and R-12. Although nearly azeotropic, charge with liquid refrigerant.
6. R-410A operates at 40-70% higher pressure than R-22 and systems designed for R-22 cannot withstand this higher pressure.
7. R-410A has an ozone depletion potential of zero, but must be reclaimed due to its global warming potential.
8. R-410A compressors use polyol ester oil.
9. Polyol ester oil is hygroscopic; it will rapidly absorb moisture and strongly hold this moisture in the oil.
10. A liquid line dryer must be used—even a deep vacuum will not separate moisture from the oil.
11. Limit atmospheric exposure to 15 minutes.
12. If compressor removal is necessary, always plug compressor immediately after removal. Purge with small amount of nitrogen when inserting plugs.

Topping Off System Charge

If a leak has occurred in the system, Bard Manufacturing recommends reclaiming, evacuating (see criteria above) and charging to the nameplate charge. If done correctly, topping off the system charge can be done without problems.

With R-410A, there are no significant changes in the refrigerant composition during multiple leaks and recharges. R-410A refrigerant is close to being an azeotropic blend (it behaves like a pure compound or single component refrigerant). The remaining refrigerant charge, in the system, may be used after leaks have occurred and then "top-off" the charge by utilizing the pressure charts on the inner control panel cover as a guideline.

REMEMBER: *When adding R-410A refrigerant, it must come out of the charging cylinder/tank as a liquid to avoid any fractionation, and to ensure optimal system performance. Refer to instructions for the cylinder that is being utilized for proper method of liquid extraction.*

Safety Practices

1. Never mix R-410A with other refrigerants.
2. Use gloves and safety glasses. Polyol ester oils can be irritating to the skin, and liquid refrigerant will freeze the skin.
3. Never use air and R-410A to leak check; the mixture may become flammable.
4. Do not inhale R-410A—the vapor attacks the nervous system, creating dizziness, loss of coordination and slurred speech. Cardiac irregularities, unconsciousness and ultimate death can result from breathing this concentration.
5. Do not burn R-410A. This decomposition produces hazardous vapors. Evacuate the area if exposed.
6. Use only cylinders rated DOT4BA/4BW 400.
7. Never fill cylinders over 80% of total capacity.
8. Store cylinders in a cool area, out of direct sunlight.
9. Never heat cylinders above 125°F.
10. Never trap liquid R-410A in manifold sets, gauge lines or cylinders. R-410A expands significantly at warmer temperatures. Once a cylinder or line is full of liquid, any further rise in temperature will cause it to burst.

Important Installer Note

For improved start up performance, wash the indoor coil with a dishwashing detergent.

High Pressure Switch

All W**AC wall-mounted air conditioner series models are supplied with a remote reset for the high pressure switch. If tripped, the pressure switch may be reset by turning the thermostat off then back on again. High pressure switch settings: Opens 650 +/– 15 PSI, Closes 520 +/– 15 PSI.

Three Phase Scroll Compresser Start Up Information

Scroll compressors, like several other types of compressors, will only compress in one rotational direction. Direction of rotation is not an issue with single phase compressors since they will always start and run in the proper direction.

However, three phase compressors will rotate in either direction depending upon phasing of the power. Since there is a 50-50 chance of connecting power in such a way as to cause rotation in the reverse direction, verification of proper rotation must be made. Verification of proper rotation direction is made by observing that suction pressure drops and discharge pressure rises when the compressor is energized. Reverse rotation also results in an elevated sound level over that with correct rotation, as well as substantially reduced current draw compared to tabulated values.

Verification of ***proper rotation*** must be made at the time the equipment is put into service. If improper rotation is corrected at this time, there will be no negative impact on the durability of the compressor. However, reverse operation for over 1 hour may have a negative impact on the bearing due to oil pump out.

NOTE: *If compressor is allowed to run in reverse rotation for an extended period of time, the compressor's internal protector will trip.*

All three phase compressors are wired identically internally. As a result, once the correct phasing is determined for a specific system or installation, connecting properly phased power leads to the same Fusite terminal should maintain proper rotation direction.

The direction of rotation of the compressor may be changed by reversing any two line connections to the unit.

Phase Monitor

All units with three phase scroll compressors are equipped with a three phase line monitor to prevent compressor damage due to phase reversal.

The phase monitor in this unit is equipped with two LEDs. If the Y signal (call for cooling) is present at the phase monitor and phases are correct, the green LED will light.

If phases are reversed, the red fault LED will be lit and compressor operation is inhibited.

If a fault condition occurs, reverse two of the supply leads to the unit. ***Do not reverse any of the unit factory wires as damage may occur.***

Condenser Fan Operation

NOTE: *Certain models may be equipped with a low ambient control (LAC), and if so, the condenser fan motor will have a delayed start until system refrigerant operating pressure builds up. After starting, the fan motor may or may not cycle depending upon ambient conditions. This is normal operation.*

50 Hz models must have fan wired on low speed. These models are factory wired on low speed.

Service Hints

1. Caution owner/operator to maintain clean air filters at all times and also not to needlessly close off supply and return air registers. This reduces airflow through the system, which shortens equipment service life as well as increasing operating costs.
2. Check all power fuses or circuit breakers to be sure they are the correct rating.
3. Periodic cleaning of the outdoor coil to permit full and unrestricted airflow circulation is essential.

Sequence of Operation

Circuit R-Y1 makes at thermostat pulling in compressor contactor, starting the compressor and outdoor motor. (See ***NOTE*** under **Condenser Fan Operation** concerning models equipped with low ambient control.) The G (indoor motor) circuit is automatically completed by the thermostat on any call for cooling operation or can be energized by manual fan switch on subbase for constant air circulation. On a call for heating, circuit R-W1 makes at the thermostat pulling in heat contactor for the strip heat and blower operation. On a call for second stage heat, R-W2 makes bringing on second heat contactor, if so equipped.

Balanced Climate™ Mode

Balanced Climate™ is a great comfort feature that can easily be applied under any normal circumstances. If the Bard air conditioning system is being set up in a typical environment where 72°F is the lowest cooling setpoint, remove the Y1/Y2 jumper and install a 2-stage cooling thermostat. This will increase the humidity removal up to 35% and provide a much more comfortable environment.

NOTE: *Units with mechanical dehumidification require an additional connection to be made when enabling Balanced Climate. Refer to dehumidification supplemental instructions for this step.*

If the application is likely to require air conditioning operation below 60°F outdoor conditions, a low ambient control (LAC) kit must be installed. The LAC kit is equipped with an outdoor temperature switch that disables Balanced Climate mode when the outdoor temperature drops below 50°F. This prevents potential evaporator coil freeze up issues. The LAC kit also comes with an evaporator freeze protection thermostat that cuts out the compressor if the evaporator begins to freeze up.

If the unit is being installed with any ventilation package, a Bard LAC kit must be installed. Failure to utilize an LAC with any air conditioner can cause coil freeze up.

Balanced Climate can readily be applied to duct-free (supply and return air grille) applications. It may also be applied to ducted applications with **limited static of 0.20" ESP (total including both supply and return**

statics). Consult Bard Application Engineering for details prior to implementation.

CAUTION: *Balanced Climate is not a replacement for a dehumidification (hot gas reheat) unit for extreme applications, but rather an enhancement feature for limited climates and applications.*

Vent Connection Plug

All units are equipped with a vent connection plug in the side of the control panel for the different ventilation packages to plug in to. If the compressor will not start and there is no "Y1" at the compressor control module, first check to make sure that either the optional vent is plugged into the vent connection plug or the supplied jumper plug is in place. **The unit will not operate without anything plugged in.** This plug is located on the side of the control panel behind the front vent door (behind the filter access door). If the unit is supplied with a factory-installed vent package, it will be plugged in but the jumper plug will also be tethered next to the connection for troubleshooting purposes, if necessary.

Compressor Control Module

The compressor control module (CCM) is standard on all models covered by this manual.

Features

Delay-on-Make Timer
Short Cycle Protection/Delay-on-Break
Low Pressure Detection
High Pressure Detection
LPC and HPC Status LEDs
Test Mode
Brownout Protection with Adjustment

Delay-on-Make Timer

A delay-on-make timer is included to be able to delay startup of the compressor. This is desired when more than one unit is on a structure so that all of the units do not start at the same time which could happen after a power loss or building shutdown. The delay-on-make time period is 2 minutes plus 10% of the delay-on-break time period. To ensure that all of the units do not start at the same time, adjust the delay-on-break timer on each unit to a slightly different delay time.

Short Cycle Protection/Delay-on-Break

An anti-short cycle timer is included to prevent short cycling the compressor. This is adjustable from 30 seconds to 5 minutes via the adjustment knob (see Figure 22). Once a compressor call is lost, the time period must expire before a new call will be initiated.

Low Pressure Detection

Low pressure switch monitoring allows for a lockout condition in a situation where the switch is open. If the low pressure switch remains open for more than 2 minutes, the CCM will de-energize the compressor for the delay-on-break time. If the switch closes again, it will then restart the compressor. If the switch trips again during the same Y call, the compressor will be de-energized and the alarm terminal will be energized indicating an alarm. The blue LED will light and stay on until power is cycled to the control or a loss of voltage is present at Y terminal for more than ½ second.

High Pressure Detection

High pressure switch monitoring allows for a lockout condition in a situation where the switch is open. If the high pressure switch opens, the CCM will de-energize the compressor. If the switch closes again, it will then restart the compressor after the delay-on-break setting has expired on the device. If the switch trips again during the same thermostat call, the compressor will be de-energized and the alarm terminal will be energized indicating an alarm. The red LED will light and stay on until power is cycled to the control or a loss of voltage is present at Y terminal for more than ½ second.

Test Mode

By rapidly rotating the potentiometer (POT) clockwise (see Figure 22), all timing functions will be removed for testing.

The conditions needed for the unit to enter test mode are as follows: POT must start at a time less than or equal to the 40 second mark. The POT must then be rapidly rotated to a position greater than or equal to the 280 second mark in less than ¼ second. Normal operation will resume after power is reset or after the unit has been in test mode for at least 5 minutes.

Brownout Protection with Adjustment

Brownout protection may be necessary if the utility power or generator power has inadequate power to prevent the voltage from dropping when the compressor starts. This is rare but can happen if the generator is undersized at the site or if the site is in a remote location far from the main power grid. Under normal circumstances, allowing the brownout to be ignored for a time period should not be needed. The CCM is shipped in “0” do not ignore position, with all the DIP switches off (Figure 22).

If ignoring the brownout is needed because of the above conditions, three preset timers can be set by DIP switches in order to delay signaling a power brownout for a specific length of time after compressor contactor is energized. This allows the compressor a time period to start even if the voltage has dropped and allows the voltage to recover. This delay only happens when the CC terminal energizes. The delay can be set to 1 second (“A” DIP switch), 5 seconds (“B” DIP switch) or 10 seconds (“C” DIP switch); time is not cumulative—only the longest setting will apply. If the voltage recovers during the brownout delay period, the compressor will continue running.

FIGURE 22
Compressor Control Module

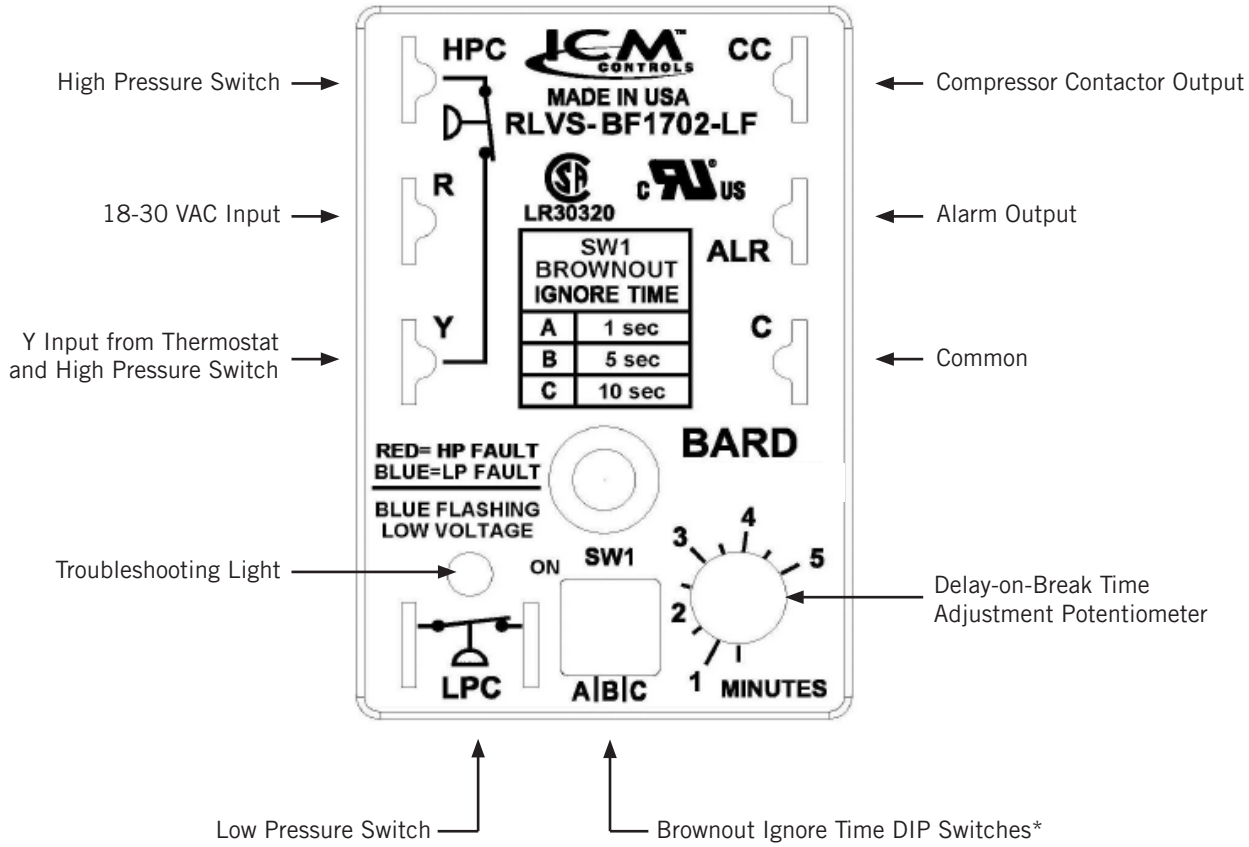

* Turn on only one switch for that specific ignore time setting. 10 seconds is the maximum brownout ignore time. If all switches are "off", the control is in "do not ignore".

If a brownout condition is detected by the CCM at any point while there is a cooling call or power is on at Y, the troubleshooting light will flash blue. The light will continue to flash until the cooling call is satisfied or power is removed from the Y terminal. This condition does not prevent operation, it only indicates that a brownout condition was present at some point during the call. If a brownout condition is detected while CC has an output, CC will be de-energized and will retry after the delay-on-break timer is satisfied, honoring any DIP switch timer chosen when the CC output is re-energized; this process will continue until call is satisfied.

If inadequate utility or generator power continues after the Delay-on-Make or Delay-on-Break timer is fulfilled, the CC output will not energize. This could lead to the compressor never starting. The control will see the brownout immediately and not start.

A common scenario and one that has been seen in the field is when a unit or units switches from utility power to generator power. With slower transfer switches, the time delay between the utility power and generator power didn't cause a problem. The units lost power, shut off and came back on line normally. With the introduction of almost instantaneous transfer switches, the power glitch may be enough that the compressor will start to run backwards.

Pressure Service Ports

High and low pressure service ports are installed on all units so that the system operating pressures can be observed. Pressure tables covering all models can be found on pages 31 and 32. It is imperative to match the correct pressure table to the unit by model number.

This unit employs high-flow Coremax valves instead of the typical Shrader type valves.

WARNING! Do NOT use a Schrader valve core removal tool with these valves. Use of such a tool could result in eye injuries or refrigerant burns!

To change a Coremax valve without first removing the refrigerant, a special tool is required which can be obtained at www.fastestinc.com/en/SCCA07H. See the replacement parts manual for replacement core part numbers.

Troubleshooting NIDEC SELECTECH Series ECM Motors

If the Motor Is Running

1. It is normal for the motor to rock back and forth on start up. Do not replace the motor if this is the only problem identified.
2. If the system is excessively noisy, does not appear to change speeds in response to a demand (Heat, Cool, Other) or is having symptoms during the cycle such as tripping limit or freezing coil, check the following:
   A. Wait for programmed delays to time out.
   B. Ensure that the motors control inputs are wired as shown in the factory-supplied wiring diagram to ensure motor is getting proper control signals and sequencing.
   C. Remove the filter and check that all dampers, registers and grilles are open and free flowing. If removing the filters corrects the problem, clean or replace with a less restrictive filter. Also check and clean the blower wheel or coil as necessary.
   D. Check the external static pressure (total of both supply and return) to ensure it is within the range as listed on the unit serial plate. If higher than allowed, additional duct work is needed.
   E. If the motor does not shut off at the end of the cycle, wait for any programmed delays to time out (no more than 90 seconds). Also make sure that there is no call for "Continuous Fan" on the G terminal.
   F. If the above diagnostics do not solve the problem, confirm the voltage checks in the next section below, then continue with the **Model SelecTech Communication Diagnostics**.

If the Motor Is Not Running

1. Check for proper high voltage and ground at the L/L1, G, N/L2 connections at the motor (see Figure 23). Correct any voltage issues before proceeding to the next step. The SelecTech motor is voltage specific. Only the correct voltage should be applied to the proper motor. Input voltage within plus or minus 10% of the nominal line power VAC is acceptable.

FIGURE 23
Motor Connections

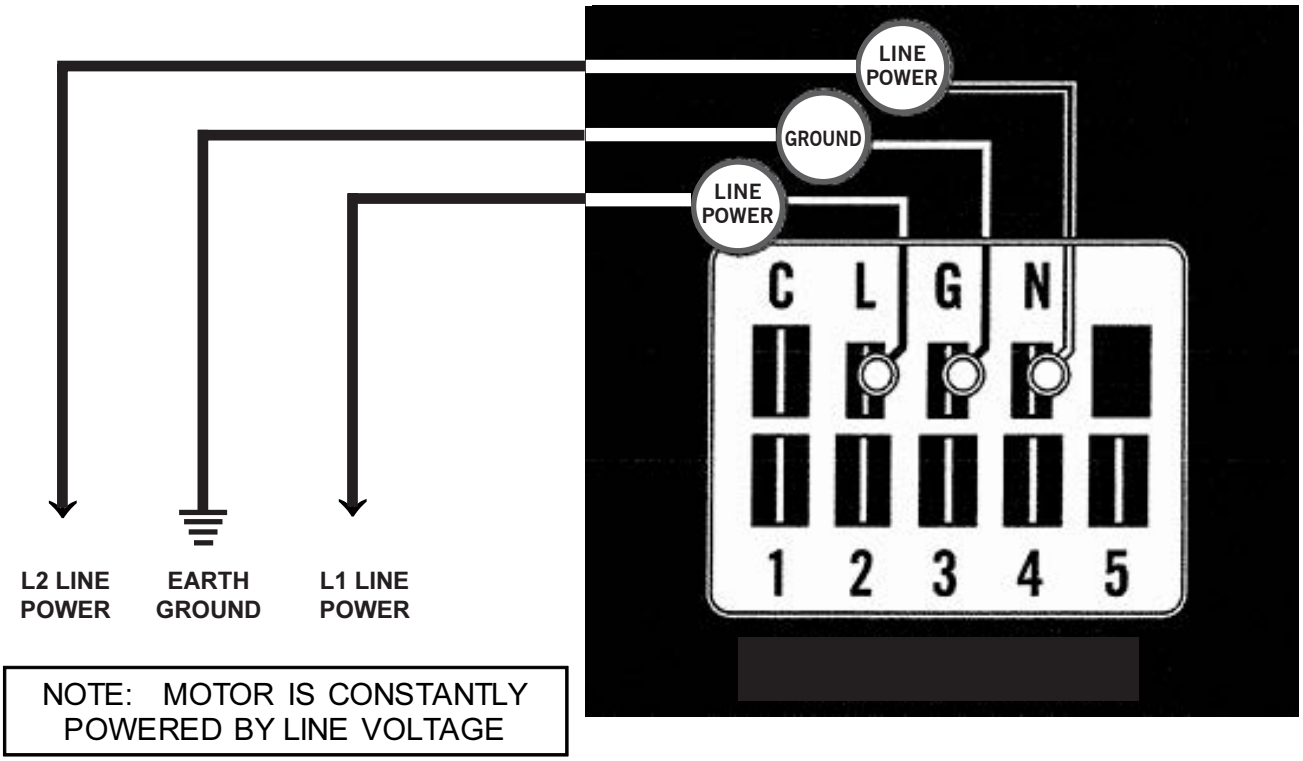

2. If the motor has proper high voltage and ground at the L/L1, G, N/L2 connections, then continue with the **Model SelecTech Communication Diagnostics**.

Model SelecTech Communication Diagnostics

The SelecTech motor is communicated through 24 VAC low voltage (thermostat control circuit wiring).

1. Start with unit wiring diagram to confirm proper connections and voltage (see Figure 24).
2. Initiate a demand from the thermostat and check the voltage between the common and the appropriate motor terminal (1-5). (G input is typically on terminal #1, but always refer to wiring diagram.)

A. If the low voltage communication is not present, check the demand from the thermostat. Also check the output terminal and wire(s) from the terminal strip or control relay(s) to the motor.

B. If the motor has proper high voltage (verified in Step 1 of **If the Motor Is Not Running** on page 28), proper low voltage to a programmed terminal and is not operating, the motor is failed and will require replacement.

FIGURE 24
Motor Connections

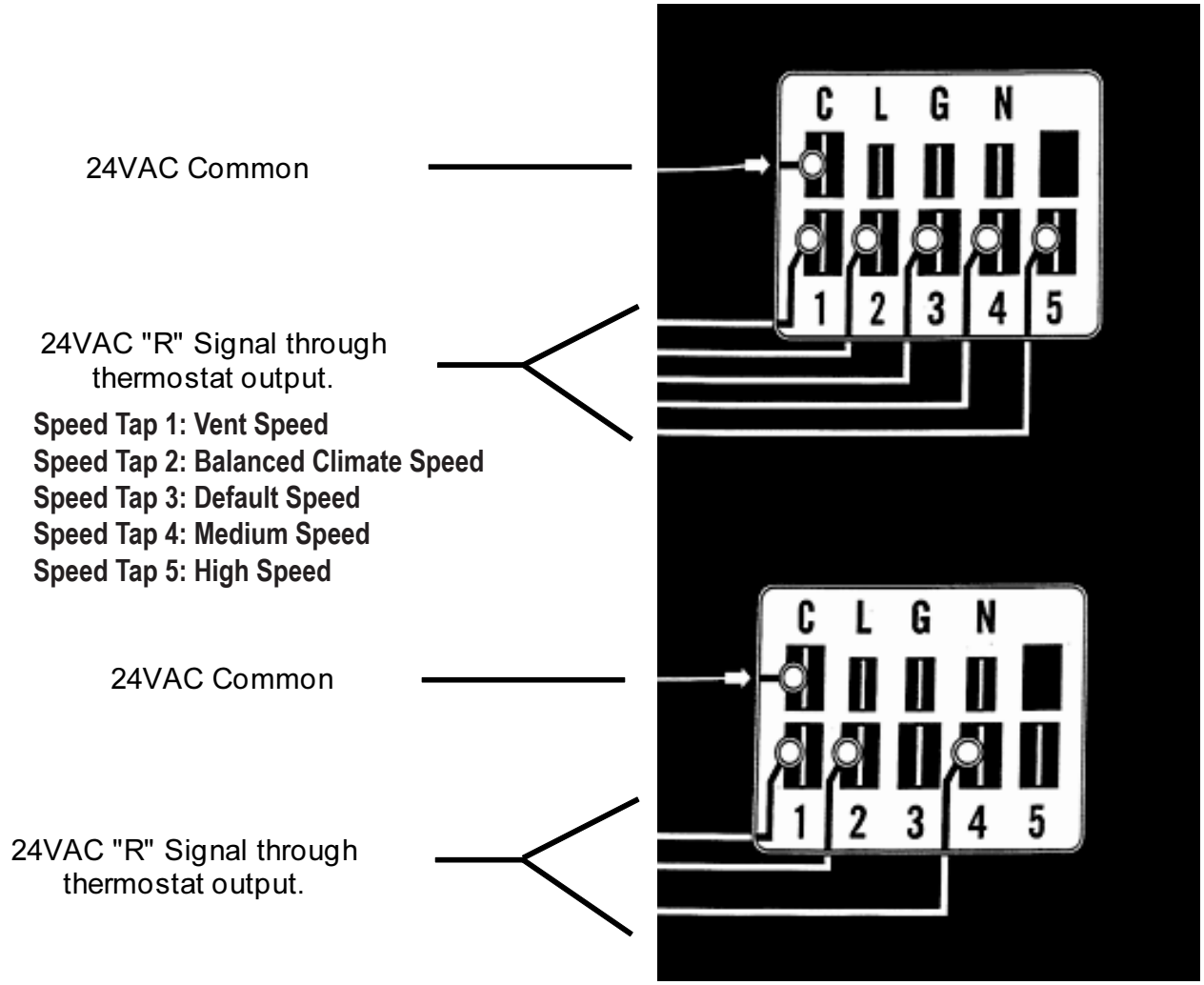

Fan Blade Setting Dimensions

Shown in Figure 25 is the correct fan blade setting for proper air delivery across the outdoor coil. Refer to Table 9 for unit specific dimension.

Any service work requiring removal or adjustment in the fan and/or motor area will require that the dimensions below be checked and blade adjusted in or out on the motor shaft accordingly.

FIGURE 25
Fan Blade Setting

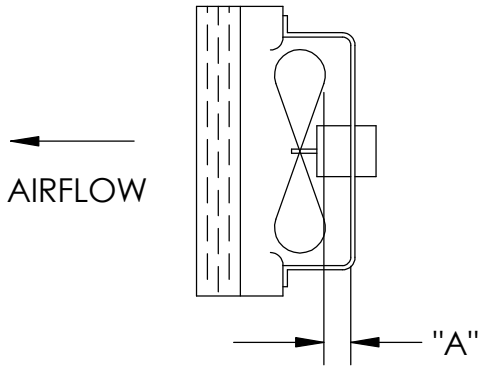

MIS-1724

TABLE 9
Fan Blade Dimensions

Model	Dimension A
W42AC W48AC W60AC	1.5"
W72AC	1.75"

R-410A Refrigerant Charge

This unit was charged at the factory with the quantity of refrigerant listed on the serial plate. AHRI capacity and efficiency ratings were determined by testing with this refrigerant charge quantity.

The pressure tables on the following pages show nominal pressures for the units. Since many installation specific situations can affect the pressure readings, this information should only be used by certified technicians as a guide for evaluating proper system performance. They shall not be used to adjust charge. If charge is in doubt, reclaim, evacuate and recharge the unit to the serial plate charge.

Removal of Fan Shroud

1. Disconnect all power to the unit before servicing.
2. To access the condenser coil for cleaning or to service the outdoor fan, first remove the side grilles.
3. The fan shroud sides can then be removed for ease of access to the coil and the back side of the shroud by removing the seven (7) screws as shown in Figure 26.
4. The fan or coil can now be serviced.
5. Reverse the steps to reassemble.

FIGURE 26
Fan Shroud Removal

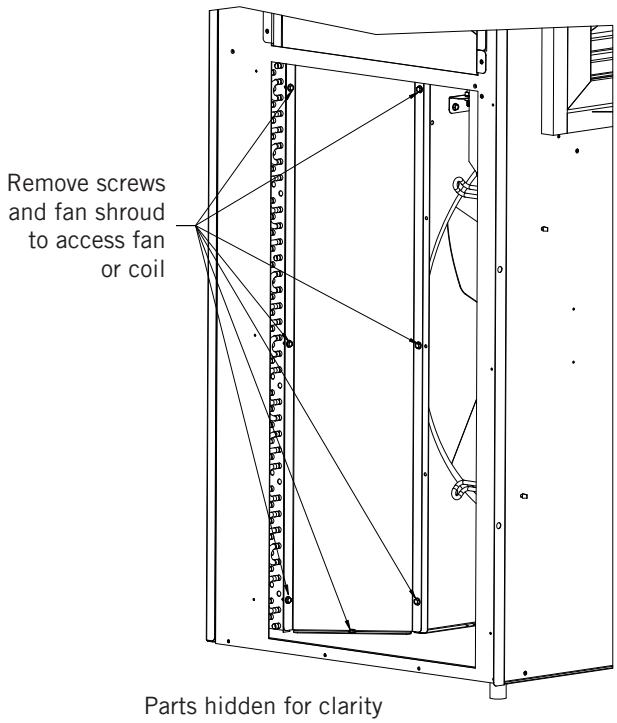

MIS-4045

TABLE 10
Cooling Pressure – Standard Airflow

Air Temperature Entering Outdoor Coil °F

Model	Return Air Temp (DB/WB)	Pressure	75	80	85	90	95	100	105	110	115	120	125	131
W42AC	75/62	Low Side	122	124	126	128	130	132	134	136	137	140	142	145
		High Side	314	336	360	383	409	434	460	488	517	546	576	613
	80/67	Low Side	130	133	135	137	139	141	143	145	147	150	152	155
		High Side	322	345	369	393	419	445	472	501	530	560	591	629
	85/72	Low Side	135	138	140	142	144	146	148	150	152	155	157	--*
		High Side	333	357	382	407	434	461	489	519	549	580	612	
W48AC	75/62	Low Side	128	131	133	135	137	138	140	142	144	146	148	150
		High Side	331	352	374	398	422	448	474	502	530	561	592	631
	80/67	Low Side	137	140	142	144	146	148	150	152	154	156	158	160
		High Side	339	361	384	408	433	459	486	515	544	575	607	647
	85/72	Low Side	142	145	147	149	151	153	155	157	159	161	164	--*
		High Side	351	374	397	422	448	475	503	533	563	595	628	
W60AC	75/62	Low Side	127	129	131	133	134	136	137	139	140	142	143	145
		High Side	326	348	371	395	420	446	472	499	527	556	586	622
	80/67	Low Side	136	138	140	142	143	145	147	149	150	152	153	155
		High Side	334	357	381	405	431	457	484	512	540	570	601	638
	85/72	Low Side	141	143	145	147	148	150	152	154	155	157	158	--*
		High Side	346	369	394	419	446	473	501	530	559	590	622	
W72AC	75/62	Low Side	119	121	122	123	125	127	129	131	133	134	136	137
		High Side	334	356	379	403	428	453	481	509	538	567	599	638
	80/67	Low Side	127	129	131	132	134	136	138	140	142	143	145	--*
		High Side	343	365	389	413	439	465	493	522	552	582	614	
	85/72	Low Side	131	134	136	137	139	141	143	145	147	148	150	--*
		High Side	355	378	403	427	454	481	510	540	571	602	635	

Low side pressure ± 4 PSIG
High side pressure ± 10 PSIG

Tables are based upon rated CFM (airflow) across the evaporator coil. If there is any doubt as to correct operating charge being in the system, the charge should be removed and system evacuated and recharged to serial plate charge weight.

NOTE: *Pressure table based on high speed condenser fan operation. If condensing pressures appear elevated check condenser fan wiring. See* **Condenser Fan Operation** *on page 25.*

** Operating at these conditions would be outside the compressor operating envelope and is not recommended.*

TABLE 11
Cooling Pressure – Balanced Climate Airflow

Air Temperature Entering Outdoor Coil °F

Model	Return Air Temp (DB/WB)	Pressure	75	80	85	90	95	100	105	110	115	120	125	131
W42AC	75/62	Low Side	115	117	119	121	122	125	127	129	132	134	137	139
		High Side	312	329	347	368	391	415	443	472	503	536	572	617
	80/67	Low Side	123	125	127	129	131	134	136	138	141	143	146	149
		High Side	320	337	356	377	401	426	454	484	516	550	587	633
	85/72	Low Side	127	129	131	134	136	139	141	143	146	148	151	--*
		High Side	331	349	368	390	415	441	470	501	534	569	608	
W48AC	75/62	Low Side	122	123	125	127	129	132	134	136	137	139	141	143
		High Side	320	341	365	388	412	438	464	491	520	549	579	616
	80/67	Low Side	130	132	134	136	138	141	143	145	147	149	151	153
		High Side	328	350	374	398	423	449	476	504	533	563	594	632
	85/72	Low Side	135	137	139	141	143	146	148	150	152	154	156	--*
		High Side	339	362	387	412	438	465	493	522	552	583	615	
W60AC	75/62	Low Side	120	122	123	126	128	130	132	134	136	137	138	141
		High Side	323	345	370	394	419	445	471	498	526	554	583	619
	80/67	Low Side	128	130	132	135	137	139	141	143	145	147	148	151
		High Side	331	354	379	404	430	456	483	511	539	568	598	635
	85/72	Low Side	132	135	137	140	142	144	146	148	150	152	153	--*
		High Side	343	366	392	418	445	472	500	529	558	588	619	
W72AC	75/62	Low Side	109	111	113	115	117	119	121	122	124	126	128	130
		High Side	325	347	371	394	419	445	472	499	528	558	588	626
	80/67	Low Side	117	119	121	123	125	127	129	131	133	135	137	139
		High Side	333	356	380	404	430	456	484	512	542	572	603	642
	85/72	Low Side	121	123	125	127	129	131	134	136	138	140	142	--*
		High Side	345	368	393	418	445	472	501	530	561	592	624	

Low side pressure ± 4 PSIG
High side pressure ± 10 PSIG

Tables are based upon Balanced Climate CFM (airflow) across the evaporator coil. If there is any doubt as to correct operating charge being in the system, the charge should be removed and system evacuated and recharged to serial plate charge weight.

NOTE: *Pressure table based on high speed condenser fan operation. If condensing pressures appear elevated check condenser fan wiring. See* **Condenser Fan Operation** *on page 25.*

** Operating at these conditions would be outside the compressor operating envelope and is not recommended.*

TABLE 12A
Electrical Specifications – W42AC, W48AC Series

Model	Rated Volts & Phase	No. Field Power Circuits	Single Circuit				Multiple Circuit							
			① Minimum Circuit Ampacity	② Maximum External Fuse or Ckt. Brkr.	③ Field Power Wire Size	③ Ground Wire	① Minimum Circuit Ampacity		② Maximum External Fuse or Ckt. Breaker		③ Field Power Wire Size		③ Ground Wire Size	
							Ckt. A	Ckt. B	Ckt. A	Ckt. B	Ckt. A	Ckt. B	Ckt. A	Ckt. B
W42AC-A00, A0Z	230/208-1	1	31	50	8	10								
A05		1	31	50	8	10								
A10		1	57	60	6	10								
A15		1 or 2	83	90	4	8	57	26	60	30	6	10	10	10
A20		1 or 2	109	125	2	6	57	52	60	60	6	6	10	10
W42AC-B00, B0Z	230/208-3	1	23	35	8	10								
B06		1	23	35	8	10								
B09		1	32	35	8	10								
B15		1	51	60	6	10								
B18		1	60	60	6	10								
W42AC-C00, C0Z	460-3	1	12	15	14	14								
C09		1	17	20	12	12								
C15		1	26	30	10	10								
W42ACRC00, RC0Z	460-3	1	13	15	14	14								
RC09		1	18	20	12	12								
RC15		1	27	30	10	10								
W48AC-A00, A0Z	230/208-1	1	35	50	8	10								
A05		1	35	50	8	10								
A10		1	59	60	6	10								
A15		1 or 2	85	90	4	8	59	26	60	30	6	10	10	10
A20		1 or 2	111	125	2	6	59	52	60	60	6	6	10	10
W48AC-B00, B0Z	230/208-3	1	26	35	8	10								
B06		1	26	35	8	10								
B09		1	33	35	8	10								
B15		1	51	60	6	10								
B18		2	N/A	N/A	N/A	N/A	34	28	40	30	8	10	10	10
W48AC-C00, C0Z	460-3	1	12	15	14	14								
C09		1	17	20	12	12								
C15		1	26	30	10	10								
W48ACRC00, RC0Z	460-3	1	14	15	14	14								
RC09		1	20	20	12	12								
RC15		1	29	30	10	10								

① These "Minimum Circuit Ampacity" values are to be used for sizing the field power conductors. Refer to the National Electrical code (latest version), Article 310 for power conductor sizing. ***CAUTION:*** *When more than one field power circuit is run through one conduit, the conductors must be derated. Pay special attention to note 8 of Table 310 regarding Ampacity Adjustment Factors when more than three (3) current carrying conductors are in a raceway.*

② Maximum size of the time delay fuse or circuit breaker for protection of field wiring conductors.

③ Based on 75°copper wire. All wiring must conform to the National Electrical Code and all local codes.

NOTE: *The Maximum Overcurrent Protection (MOCP) value listed is the maximum value as per UL 1995 calculations for MOCP (branch-circuit conductor sizes in this chart are based on this MOCP). The actual factory-installed overcurrent protective device (circuit breaker) in this model may be lower than the maximum UL 1995 allowable MOCP value, but still above the UL 1995 minimum calculated value or Minimum Circuit Ampacity (MCA) listed.*

IMPORTANT: *While this electrical data is presented as a guide, it is important to electrically connect properly sized fuses and conductor wires in accordance with the National Electrical Code and all local codes.*

TABLE 12B
Electrical Specifications – W60AC, W72AC Series

Model	Rated Volts & Phase	No. Field Power Circuits	Single Circuit				Multiple Circuit							
			① Minimum Circuit Ampacity	② Maximum External Fuse or Ckt. Brkr.	③ Field Power Wire Size	③ Ground Wire	① Minimum Circuit Ampacity		② Maximum External Fuse or Ckt. Breaker		③ Field Power Wire Size		③ Ground Wire Size	
							Ckt. A	Ckt. B	Ckt. A	Ckt. B	Ckt. A	Ckt. B	Ckt. A	Ckt. B
W60AC-A00, A0Z	230/208-1	1	38	50	8	10								
A05		1	38	50	8	10								
A10		1	59	60	6	10								
A15		1 or 2	85	90	4	8	59	26	60	30	6	10	10	10
A20		1 or 2	111	125	2	6	59	52	60	60	6	6	10	10
W60AC-B00, B0Z	230/208-3	1	28	40	8	10								
B06		1	28	40	8	10								
B09		1	34	40	8	10								
B15		1	52	60	6	10								
B18		2	N/A	N/A	N/A	N/A	34	28	40	30	8	10	10	10
W60AC-C00, C0Z	460-3	1	14	20	12	12								
C09		1	18	20	12	12								
C15		1	26	30	10	10								
W60ACRC00, RC0Z	460-3	1	16	20	12	12								
RC09		1	20	20	12	12								
RC15		1	29	30	10	10								
W72AC-A00, A0Z	230/208-1	1	56	60	6	10								
A05		1	56	60	6	10								
A10		1 or 2	60	70	6	8	56	26	60	30	6	10	10	10
A15		1 or 2	86	90	3	8	60	26	60	30	6	10	10	10
A20		1 or 2	112	125	2	6	60	52	60	60	6	6	10	10
W72AC-B00, B0Z	230/208-3	1	38	50	8	10								
B06		1	38	50	8	10								
B09		1	38	50	8	10								
B15		1	54	60	6	10								
B18		2	N/A	N/A	N/A	N/A	38	28	40	30	8	10	10	10
W72AC-C00, C0Z	460-3	1	18	25	10	10								
C09		1	18	25	10	10								
C15		1	27	30	10	10								
W72ACRC00, RC0Z	460-3	1	20	25	10	10								
RC09		1	20	25	10	10								
RC15		1	29	30	10	10								

① These "Minimum Circuit Ampacity" values are to be used for sizing the field power conductors. Refer to the National Electrical code (latest version), Article 310 for power conductor sizing. ***CAUTION:*** *When more than one field power circuit is run through one conduit, the conductors must be derated. Pay special attention to note 8 of Table 310 regarding Ampacity Adjustment Factors when more than three (3) current carrying conductors are in a raceway.*

② Maximum size of the time delay fuse or circuit breaker for protection of field wiring conductors.

③ Based on 75°copper wire. All wiring must conform to the National Electrical Code and all local codes.

NOTE: *The Maximum Overcurrent Protection (MOCP) value listed is the maximum value as per UL 1995 calculations for MOCP (branch-circuit conductor sizes in this chart are based on this MOCP). The actual factory-installed overcurrent protective device (circuit breaker) in this model may be lower than the maximum UL 1995 allowable MOCP value, but still above the UL 1995 minimum calculated value or Minimum Circuit Ampacity (MCA) listed.*

IMPORTANT: *While this electrical data is presented as a guide, it is important to electrically connect properly sized fuses and conductor wires in accordance with the National Electrical Code and all local codes.*

Setting Unit Airflow

The unit is set from the factory at the default speed. Most units have three selectable cooling speed taps that can be utilized. The default speed is the lowest cooling speed. The two higher speed taps can be used for higher duct static applications so that the unit can maintain the recommended airflow as shown in Table 13. The higher speeds can also be used when higher sensible cooling is desired. To change to the higher speed taps, move the orange/black wire on the blower speed terminal block to either MED or HI. Refer to Table 15 on page 39 for the corresponding airflow of each tap. Set the unit duct static based on the highest airflow that the unit will run at.

TABLE 13
Recommended Airflow

Model	Nominal Rated CFM*	Nominal Rated ESP*	Recommended Airflow Range	Factory Speed Connection
W42AC	1350	.15	1250 - 1600	Default
W48AC	1550	.20	1450 - 1750	
W60AC	1750	.20	1650 - 2000	
W72AC	1900	.25	1800 - 2100	

* Rated CFM and ESP on factory speed connection.

NOTE: *Be sure to adjust the system static or blower speed to maintain airflows above the minimum recommendations to prevent freeze up conditions if Balanced Climate mode is activated.*

Do not operate the unit in Balanced Climate mode if running high static applications as indicated in the blower performance table. If Balanced Climate mode is activated as described on page 19, the unit will run in this mode at all times unless there is a call for ventilation, electric heat or 2nd stage cooling from a 2-stage thermostat. At that time, the unit will automatically activate a higher speed tap.

Blower Speeds

Five factory programmed speed taps (torque settings) are available for the motor, and are selected through different unit modes of operation. These modes are energized by 24VAC signals from the low voltage terminal block located inside the control panel by a thermostat or other controlling device. Each speed tap is programmed by Bard at the factory to different motor torque settings (see Figure 27).

FIGURE 27
Speed Taps

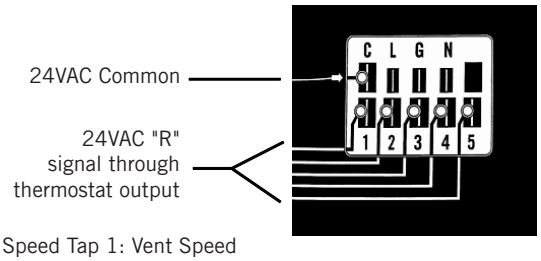

Speed Tap 1: Vent Speed
Speed Tap 2: Balanced Climate Speed
Speed Tap 3: Default Speed
Speed Tap 4: Medium Speed
Speed Tap 5: High Speed

Multiple motor speed taps may be energized simultaneously by 24VAC power during different modes of operation. The highest number speed tap energized takes priority with 5 being the highest and 1 being the lowest. See Table 14 for the corresponding blower speeds with the different modes of operation.

TABLE 14
Blower Speeds for Unit Operational Modes

Unit Operation	Thermostat Inputs – 24VAC							Speed Taps			Blower Speed	Compressor Operation
	G	Y1	Y2	W1	W2	A	D	1	2	3-4-5[1]		
Blower Only	X							X			Vent/Blower Only	Off
Balanced Climate Cooling	X	X						X	X		Balanced Climate	On
Full Load Cool	X	X	X					X	X	X	Lo/Med/Hi	On
1st Stage Heat				X						X	Lo/Med/Hi	Off
2nd Stage Heat				X	X					X	Lo/Med/Hi	Off
Dehumidify[2]							X	X	X		Balanced Climate	On

1 Fan speed is selectable through the blower speed control terminal block. LO (default), MED or HI speeds can be used.
2 Dehumidification operation is disabled when a call for heating or cooling occurs. Unit runs at Balanced Climate speed during dehumidification operation.

Programmed blower speed taps are as follows (see also Figure 28):

Speed Tap 1: **Vent/blower only** speed

Speed Tap 2: **Balanced Climate** speed

Speed Tap 3: **Default LO cooling & heating** speed. Energized by default for cooling operation through the blower speed tap selection and is labeled as LO.

Speed Tap 4: **Optional MED Cooling & heating** speed. Selected manually through the blower speed tap selection and is labeled as MED.

Speed Tap 5: **Optional HI cooling & heating** speed. Selected manually through the blower speed tap selection and is labeled as HI.

FIGURE 28
Speed Taps

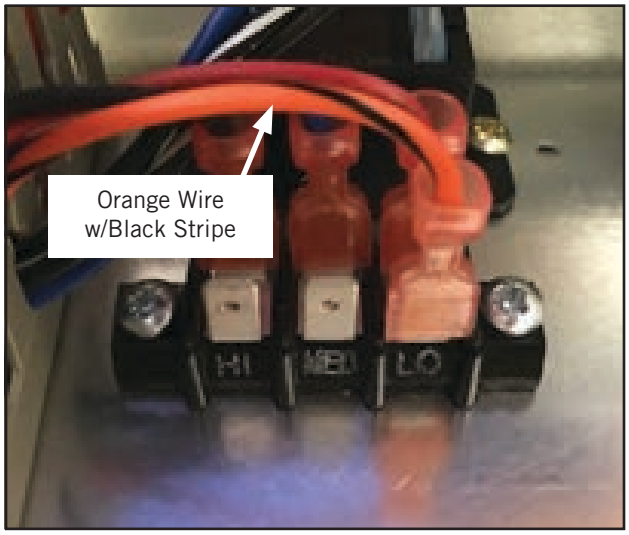

Speed Tap 1 – Vent/Blower Only

Speed taps 1 and 3 are programmed to identical torque settings in the ECM motor. This means that if speed tap 1 is energized, the airflow amount will be the same as default airflow. Tap 1 is used when a vent is installed and ventilation is called for by energizing the A terminal of the low voltage terminal block with 24VAC. Speed tap 1 is the lowest priority; if any of the other speed taps are energized, they will override speed tap 1.

Speed Tap 2 – Balanced Climate

Speed tap 2 is programmed to a lower than rated speed in the ECM motor. In order for Balanced Climate speed to be used during compressor cooling mode, the jumper between Y1 and Y2 must be removed. This means that if speed tap 2 is energized, the airflow amount will be lower than default airflow. Tap 2 is used when Balanced Climate is called for by energizing the Y1 terminal of the low voltage terminal block with 24VAC. Speed tap 2 is overridden if taps 3, 4, or 5 are energized.

Speed Tap 3 – Default LO Cooling & Heating

Speed tap 3 is programmed for rated speed in the SelecTech motor. This means that if speed tap 3 is energized, the airflow amount will be the default airflow. Tap 3 is used by default when cooling is called for by energizing the Y1 terminal of the low voltage terminal block with 24VAC. The unit is shipped with the jumper between Y1 and Y2 installed and it must be removed to use Balanced Climate mode. The unit is shipped with the orange/black wire connected to terminal LO (rated speed) on the blower selection speed terminal block. Speed tap 3 can be overridden if taps 4 or 5 are energized by changing the position of the orange/black wire on the blower selection speed terminal block to MED (4) or HI (5) positions.

Speed Tap 4 – Optional MED Cooling & Heating

Speed tap 4 is programmed to a higher than rated speed in the ECM motor. This is a user-selectable airflow amount that will be higher than rated airflow. Tap 4 is used for cooling operation if the orange/black wire on the blower speed selection terminal block is moved to MED. Speed tap 4 can be overridden if tap 5 is energized.

Speed Tap 5 – Optional HI Cooling & Heating

Speed tap 5 is programmed to the highest speed in the ECM motor. This is a user-selectable airflow amount that will provide the highest rated airflow. Tap 5 is used for cooling operation if the orange/black wire on the blower speed selection terminal block is moved to HI.

Dirty Filter Switch

1. Disconnect all power to the unit. Remove control panel outer cover and upper front panel.
2. The dirty filter switch is located on top of the filter partition between the blower wheels (see Figure 29). The dirty filter indicator light and reset switch is located on the right side of the filter access opening above the control panel. Remove the cover on the dirty filter switch and ensure the knob is set at 0.4" W.C. (see Figure 30 on page 38). This is only a recommended starting point prior to making switch adjustments. Switch setting is highly dependent on filter type used, blower speed, unit ducting and other unit installation characteristics. See **Dirty Filter Switch Adjustment** instructions on how to make proper switch adjustments.
3. Re-install upper front panel.

Dirty Filter Switch Adjustment

1. Apply power to the unit.
2. Turn the unit indoor blower on (energize R-G on low voltage terminal board).
3. With air filters installed and switch initially set at 0.4" W.C. (see Step 2 under **Dirty Filter Switch**), begin restricting the air filter of the unit

using a piece of cardboard under the filters until the switch trips and the light comes on. If the filter is restricted by 75% (or desired restriction amount), skip to Step 6.

4. If switch setting adjustment is required, disconnect power to the unit. Remove the upper front panel and the cover on the airflow switch so that adjustment can be made. If the switch tripped before 75% restriction was reached, turn the knob slightly clockwise. If the switch tripped after 75%, turn the knob counter-clockwise (see Figure 30 on page 38).
5. Replace the upper front panel and repeat Steps 1-3. Continue to make adjustments described in Step 4 until the desired restriction is obtained.
6. Remove the restriction and reset the filter switch. Replace the switch cover once adjustment is complete.
7. Install the outer control panel cover. This completes the adjustment.

FIGURE 29
Dirty Filter Switch and Dirty Filter Indicator Light/Reset Switch

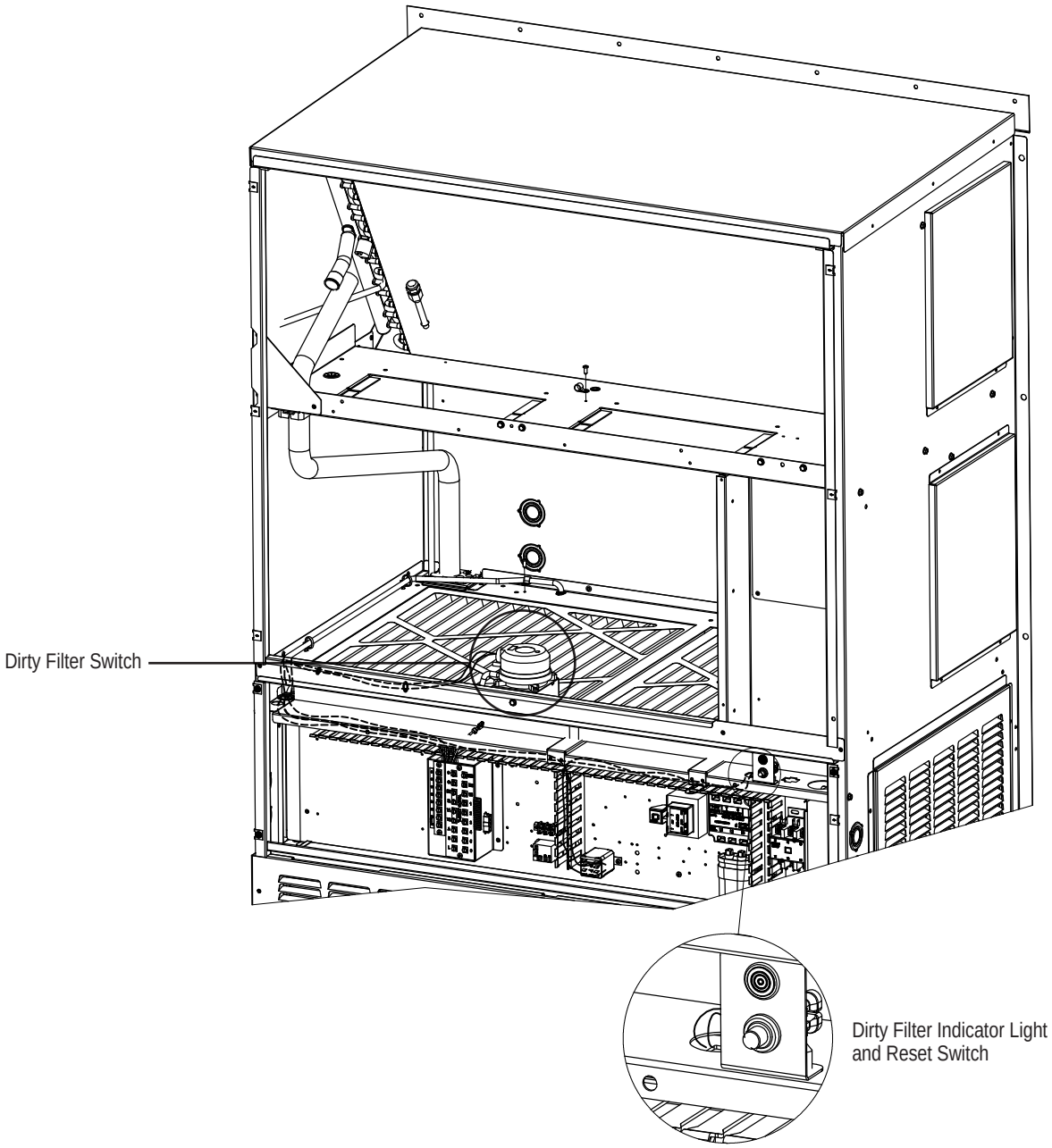

FIGURE 30
Adjusting Dirty Filter Switch

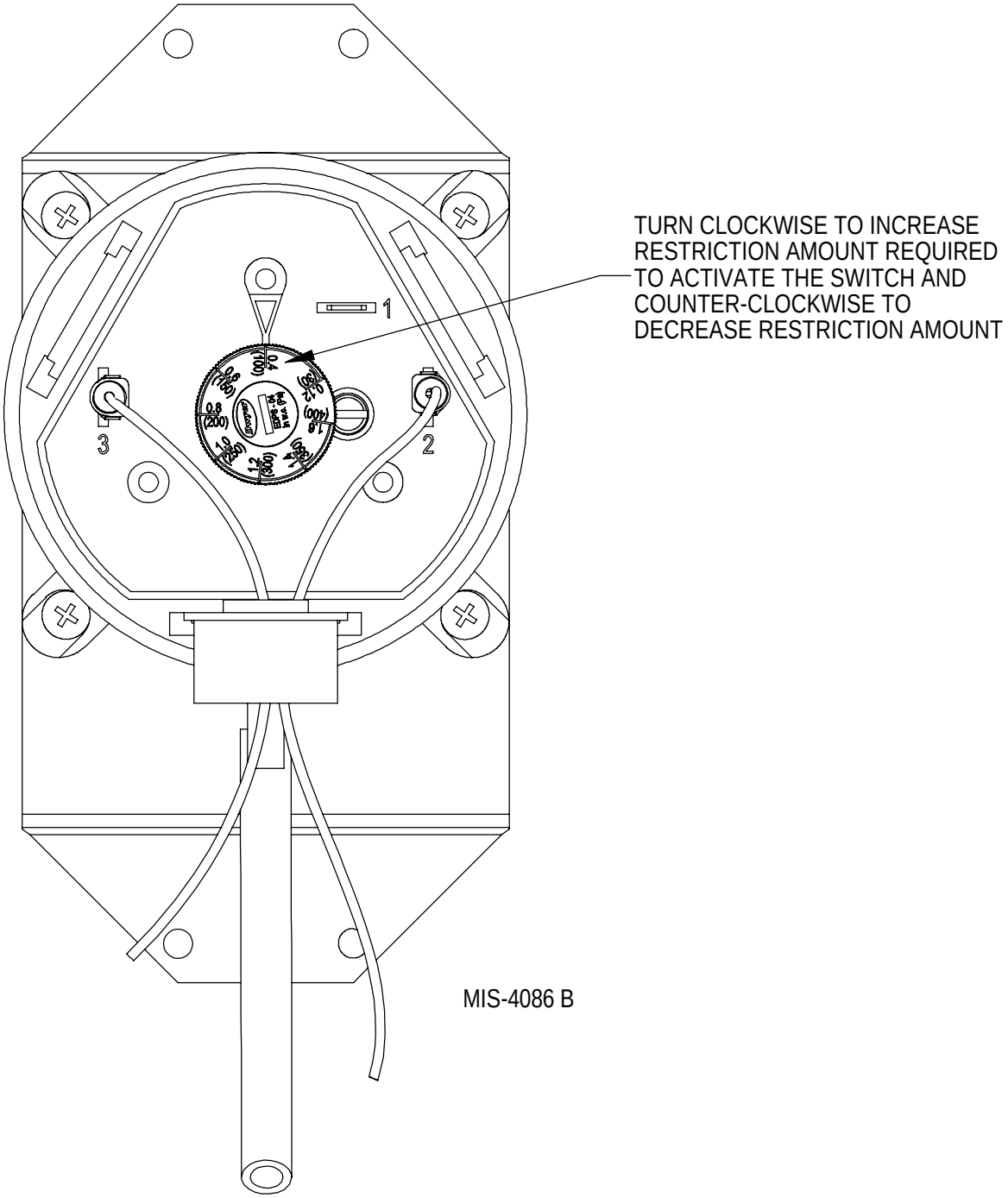

TABLE 15
Indoor Blower Performance

	E.S.P.[1] (In. H_2O)	Balanced Climate™ Speed		Default LO Cooling & Heating/ Ventilation Speed[2]		Optional MED Cooling & Heating Speed		Optional HI Cooling & Heating Speed	
		Dry Coil	Wet Coil	Dry Coil	Wet Coil	Dry Coil	Wet Coil	Dry Coil	Wet Coil
W42AC	0.00	1345	1190	1510	1495	1740	1650	1815	1750
	0.10	1120	1025	1445	1415	1660	1600	1740	1675
	0.15	1020	950	1410	1375	1620	1565	1700	1635
	0.20	930	875	1370	1325	1580	1530	1660	1600
	0.25			1325	1280	1535	1485	1620	1560
	0.30			1280	1230	1490	1440	1575	1515
	0.40			1175	1120	1400	1330	1490	1430
	0.50			1055	1000	1310	1205	1400	1345
W48AC	0.00	1370	1305	1795	1685	1895	1850	2000	1920
	0.10	1270	1200	1730	1625	1845	1765	1940	1850
	0.15	1220	1145	1690	1590	1815	1725	1905	1815
	0.20	1165	1095	1655	1555	1785	1685	1870	1780
	0.25			1615	1520	1750	1645	1835	1745
	0.30			1575	1485	1715	1610	1800	1710
	0.40			1485	1405	1635	1540	1730	1635
	0.50			1390	1325	1550	1475	1655	1560
W60AC	0.00	1540	1480	1960	1870	2085	1985	2160	2065
	0.10	1365	1320	1880	1815	2005	1925	2070	1985
	0.15	1285	1245	1840	1785	1970	1895	2025	1950
	0.20	1215	1180	1805	1760	1935	1865	1990	1915
	0.25			1770	1730	1905	1835	1950	1885
	0.30			1735	1700	1870	1810	1920	1855
	0.40			1675	1635	1815	1750	1865	1800
	0.50			1625	1570	1770	1700	1820	1755
W72AC	0.00	1675	1605	2140	2065	2210	2155	2265	2195
	0.10	1515	1455	2080	2005	2160	2085	2215	2140
	0.15	1445	1390	2050	1975	2135	2055	2190	2110
	0.20	1380	1330	2020	1945	2105	2025	2165	2080
	0.25	1320	1270	1990	1915	2080	1995	2135	2050
	0.30			1960	1885	2050	1965	2110	2020
	0.40			1900	1825	1985	1905	2050	1965
	0.50			1840	1765	1920	1855	1985	1905

[1] E.S.P. is the total combined external static pressure of both the supply and return ducts or grills.
[2] This is the speed set at the factory.

TABLE 16
Maximum ESP of Operation
Electric Heat Only

Model	W42AC, W48AC		W60AC, W72AC	
Outlet	FRONT		FRONT	
Speed	High	Low	High	Low
-A0Z	.50	.50	.50	.50
-A05	.50	.50	.50	.50
-A10	.50	.50	.50	.50
-A15	.50	.50	.50	.50
-A20	.50	.50	.50	.40
-B0Z	.50	.50	.50	.50
-B06	.50	.50	.50	.50
-B09	.50	.50	.50	.50
-B15	.50	.50	.50	.50
-B18	.50	.50	.50	.50
-C0Z	.50	.50	.50	.50
-C09	.50	.50	.50	.50
-C15	.50	.50	.50	.50

Values shown are for units equipped with standard 1" throwaway filter or 1" washable filter.

Derate ESP by .15 for 2" pleated filters.

TABLE 17
Electric Heat

Models	240V-1		208V-1		240V-3		208V-3		460V-3	
KW	Amps	BTUH	Amps	BTUH	Amps	BTUH	Amps	BTUH	Amps	BTUH
5	20.8	17065	18.1	12800						
6					14.4	20500	12.5	15360	7.2	20500
9					21.7	30600	18.7	23030	10.8	30700
10	41.6	34130	36.2	25600						
15	62.5	51250	54.0	38400	36.2	51200	31.2	38400	18.0	51200
18					43.3	61430	37.4	46060		
20	83.2	68260	57.6	51200						

TABLE 18
Vent and Control Options

Part Number	Description	230V Units	460V Units
CMC-32	Start Kit (230V 1-Phase)	X	
CMC-33	Dirty Filter Switch Kit	X	X
CMC-35	Alarm Relay	X	X
CMC-38	Crankcase Heater - 230V	X	
CMC-39	Crankcase Heater - 460V		X
CMA-39	LAC - On/Off	X	X
CMA-43	ODT	X	X
CMA-44	DDC	X	X
BOP5	Blank Off Plate	X	X
FAD-NE5	Fresh Air Damper - No Exhaust	X	X
FAD-BE5	Fresh Air Damper - Barometric Exhaust	X	X
CRV-F5	Commercial Ventilator - On/Off, Spring Return	X	X
CRV-V5	Commercial Ventilator - 0-10V, Spring Return	X	X
ECON-NC5	Economizer - Bldg. Equipment, 0-10V, No Controls	X	X
ECON-WD5	Economizer - Bldg. Equipment, Enthalpy	X	X
ECON-DB5	Economizer - Bldg. Equipment, Temperature	X	X
ERV-FA5	Energy Recovery Ventilator - 230V	X	
ERV-FC5	Energy Recovery Ventilator - 460V		X

TABLE 19
Optional Accessories

		W42AC-A	W42AC-B	W42AC-C, RC	W42ACDA	W42ACDB	W42ACDC	W48AC-A	W48AC-B	W48AC-C, RC	W48ACDA	W48ACDB	W48ACDC	W60AC-A	W60AC-B	W60AC-C, RC	W60ACDA	W60ACDB	W60ACDC	W72AC-A	W72AC-B	W72AC-C, RC	W72ACDA	W72ACDB	W72ACDC
Heater Kits	EHWA42C-A05													X											
	EHWA42CD-A05				X																				
	EHWA42C-A10	X						X																	
	EHWA42CD-A10																						X		
	EHWA42C-A15	X						X			X														
	EHWA42CD-A15				X																				
	EHWA42C-A20	X						X												X					
	EHWA42C-B05					X						X													
	EHWA42C-B06		X						X																
	EHWA42C-B09		X																						
	EHWA42CD-B09					X			X																
	EHWA42C-B15		X																						
	EHWA42C-B18		X																						
	EHWA42CD-B18					X																			
	EHWA42C-C05						X						X												
	EHWA42C-C09			X																					
	EHWA42CD-C09						X																		
	EHWA42C-C15			X						X															
	EHWA48C-A05	X						X																	
	EHWA48CD-A05										X														
	EHWA48CD-A10				X						X														
	EHWA48CD-B09											X													
	EHWA48C-B15								X																
	EHWA48C-B18								X												X				
	EHWA48CD-B18											X													
	EHWA48C-C09									X			X												
	EHWA60CD-A05																X								
	EHWA60C-A10													X											
	EHWA60CD-A10																X								
	EHWA60C-A15													X											
	EHWA60C-A20													X											
	EHWA60C-B06														X										
	EHWA60C-B09														X										
	EHWA60CD-B09																	X							
	EHWA60C-B15														X						X				
	EHWA60CD-B15																	X						X	
	EHWA60C-B18														X										
	EHWA60C-C09															X			X			X			X
	EHWA60C-C15															X						X			
	EHWA72C-A05																			X					
	EHWA72CD-A05																						X		
	EHWA72C-A10																			X					
	EHWA72C-A15																			X					
	EHWA72CD-A15																						X		
	EHWA72C-B06																				X				
	EHWA72CD-B06																							X	
	EHWA72C-B09																				X				
	EHWA72CD-B09																							X	
	EHWA72C-C15																		X						X
Circuit Breaker (WMCBC)	WMCBC-08A	X			X			X			X			X			X								
	WMCBC-05B		X			X			X			X													
	WMCBC-06C			X			X			X			X			X			X			X			X
	WMCBC-09A																			X			X		
	WMCBC-06B														X			X							
	WMCBC-08B																				X			X	

GRAPH 1
W42AC FAD-NE5 W/O Exhaust Ventilation Delivery

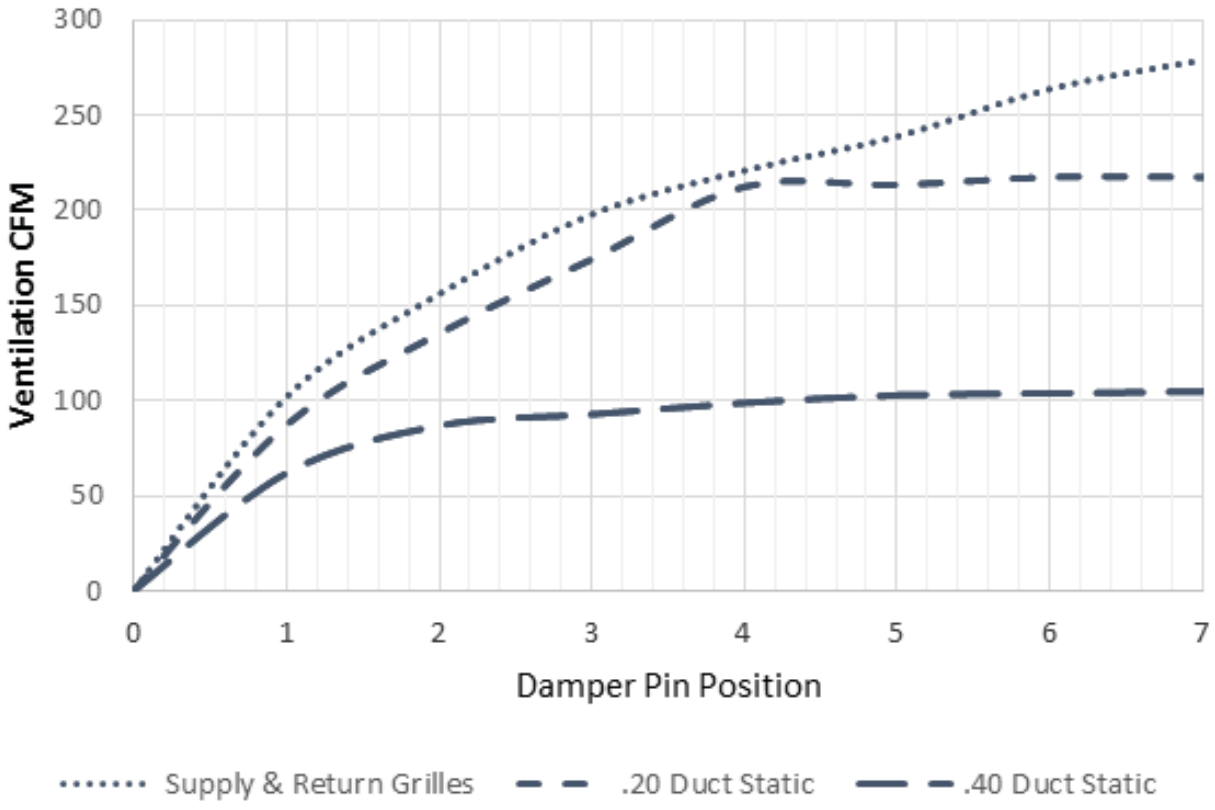

GRAPH 2
W48AC FAD-NE5 W/O Exhaust Ventilation Delivery

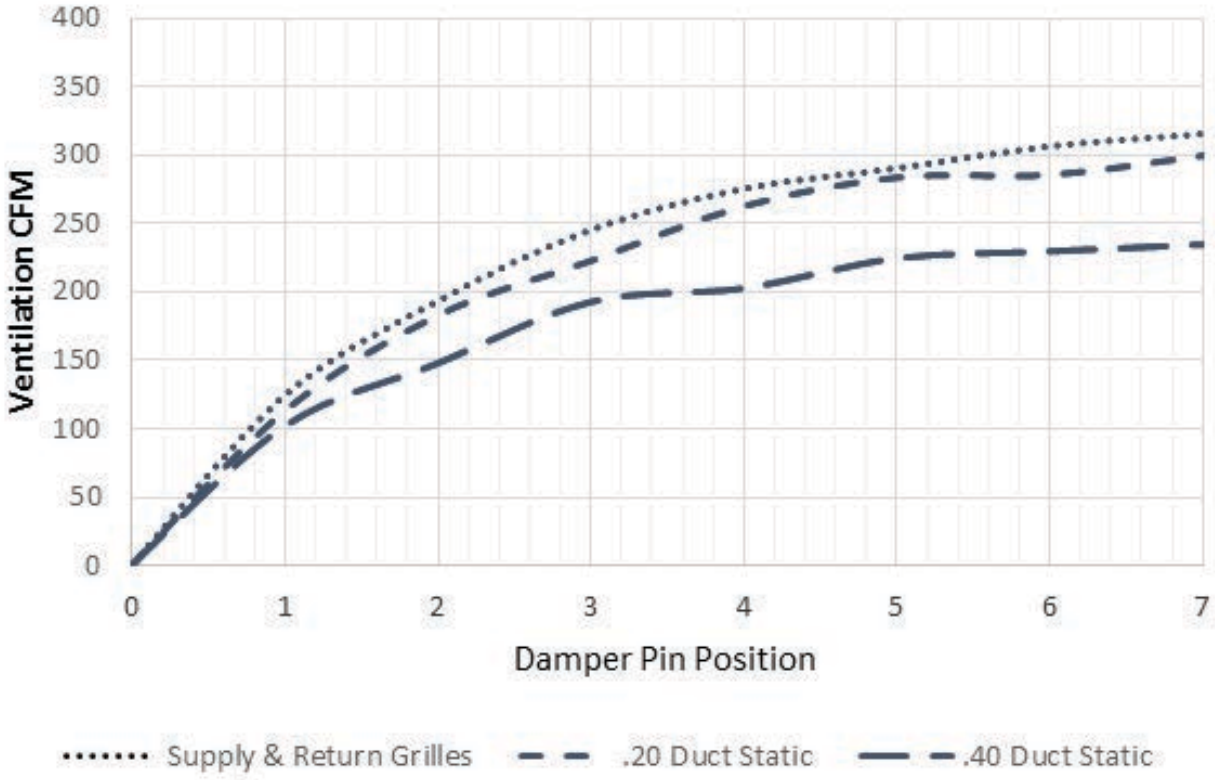

GRAPH 3
W60AC FAD-NE5 W/O Exhaust Ventilation Delivery

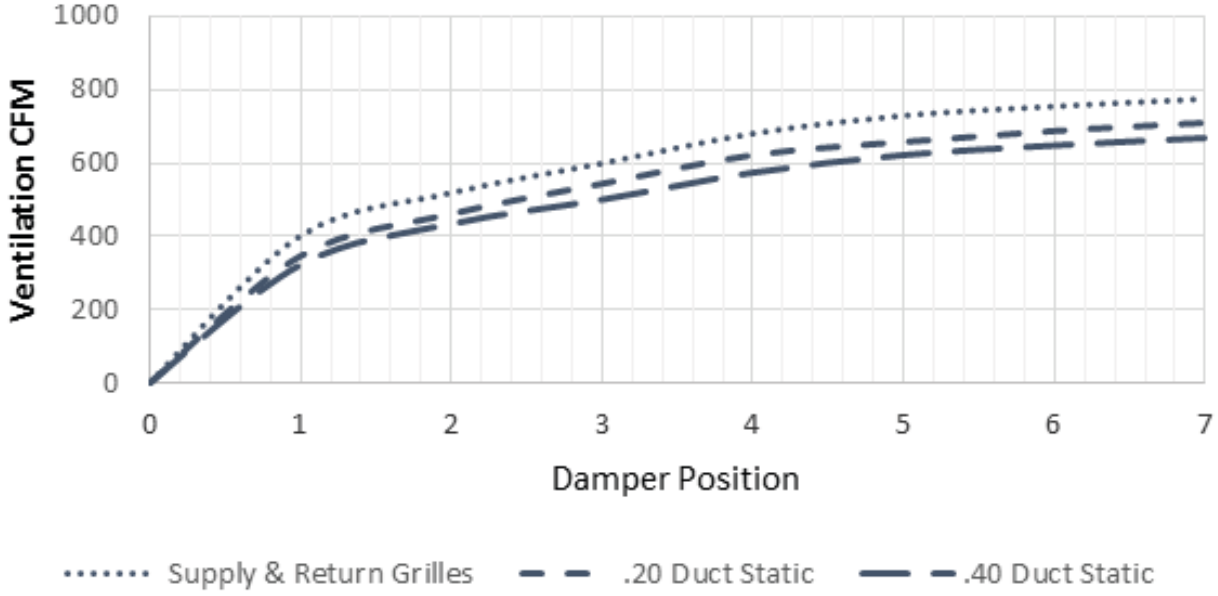
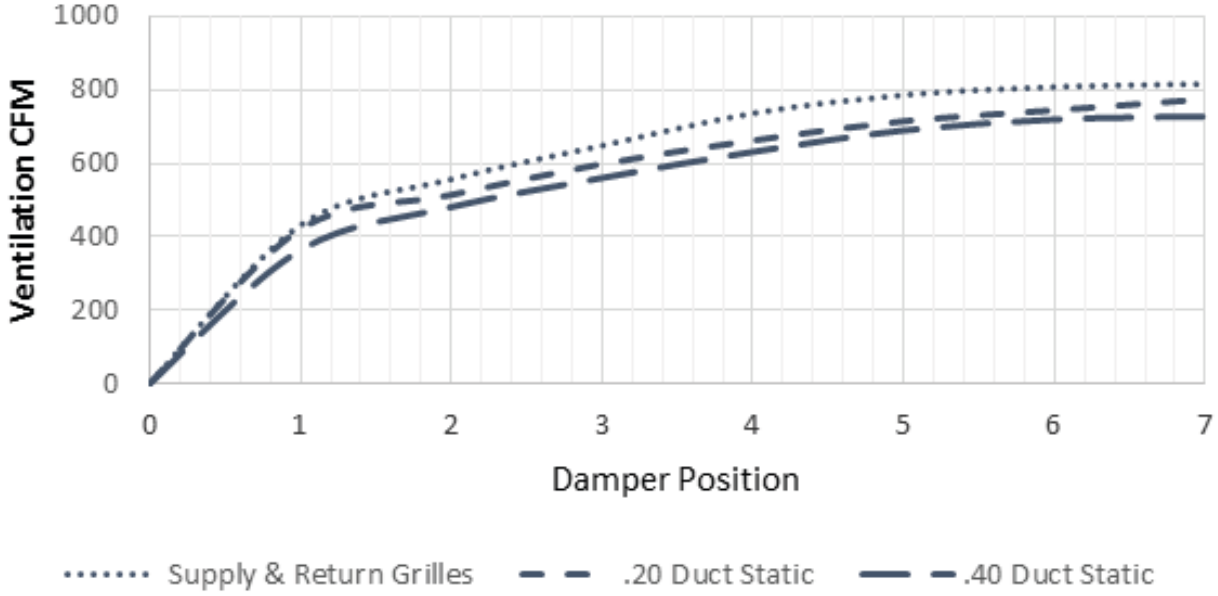
GRAPH 4
W72AC FAD-NE5 W/O Exhaust Ventilation Delivery