SERVICE INSTRUCTIONS

MULTI-TEC®
Wall-Mount Air Conditioner

Models:

W42ACE*	W60ACE*
W42ACM*	W60ACM*
W42ACP*	W60ACP*
W48ACE*	W72ACE*
W48ACM*	W72ACM*
W48ACP*	W72ACP*

NOTE: LC6000 controller is required for operation when multiple MULTI-TEC wall-mount air conditioners are used.

Bard Manufacturing Company, Inc.
Bryan, Ohio 43506
www.bardhvac.com

Manual: 2100-725E
Supersedes: 2100-725D
Date: 7-2-21

CONTENTS

General Information 4
- Air Conditioning System 4
- Wall-Mount Air Conditioner Units 4
- General 4
- Shipping Damage 4
- Additional Publications 4

Using the TEC-EYE™ 6
- TEC-EYE Hand-Held Diagnostic Tool 6
  - TEC-EYE Screen Structure and Password Level 7
  - TEC-EYE Acronyms 7
  - Status Screen 7
  - Quick Menu 8
    - Setpoints 8
    - Information 8
    - Alarm Log 8
  - Addressing Wall-Mount Units 9
  - Setting Unit Zone 9
  - Additional Features 9
    - Software Versioning Guide 9
    - Model/Serial Number Retain 9
    - Model/Number Verification 9
    - Time/Date/Timezone Sync 9
  - Executing a Self Test 10
    - Parameter Description 10
  - Changing Free Cooling Type 10
  - Entering Model/Serial Number 10

Alarms 11
- Acknowledging/Clearing Alarms 11
  - Clearing Alarms 11
  - Clearing Alarm Logs 11
- Alarm Adjustment 11
  - Mixed Air Alarm 11
  - Refrigerant Low Pressure 12
  - Refrigerant High Pressure 12
  - Economizer Damper 12
  - Freezestat 13

Control Operation 14
- On/Off Control 14
- Blower Control 14
- Balanced Climate Mode 14
  - Balanced Climate Enable/Disable 14
- Temperature Control 15
  - Cooling Sequence – Economizer Available 15
  - Cooling Sequence – Economizer N/A 15
  - Heating Sequence 16
- Free Cooling 16
  - Economizer Disable 16
  - Economizer Enable 17
    - None 17
    - Drybulb Only 17
    - Temperature and Humidity (Default) 17
    - Enthalpy 17
  - Economizer Modulation 17
- Emergency Cooling 18
- Unit Disable 18
- Compressor 18
  - Enable 18
  - Delays and Run Time 18
- Dehumidification 19
  - Dehumidification Modes 19
    - Dehumidification Off 19
    - Passive Dehumidification 19
    - Active Dehumidification 19
  - Electric Reheat Dehumidification 19
    - Electric Reheat Dehumidification Operation 19
  - Mechanical Dehumidification 20
    - Mechanical Dehumidification Operation 20

General Refrigerant Information 23
- General 23
- Topping Off System Charge 23
- Safety Practices 23
- R410A Refrigerant Charge 23

Componentry 25
- High Pressure Switch 25
- Three Phase Scroll Compressor Start Up Information 25
- Phase Monitor 25
- Condenser Fan Operation 25
- Low Ambient Control 25
- Compressor Control Module (CCM) 25
  - Delay-on-Make Timer 25
  - Short Cycle Protection/Delay-on-Break 26
  - High Pressure Detection 26
  - Test Mode 26
  - Brownout Protection w/Adjustment 26
- Pressure Service Ports 27
- Outdoor Fan Motor 27

Maintenance and Troubleshooting 29
- Standard Maintenance Procedures 29
- Removal of Fan Shroud 29
- Filters 30
  - Filter Removal/Installation 30
  - Switching Filter Sizes 30
- Dirty Filter Switch 32
  - Dirty Filter Switch Adjustment 32
- Troubleshooting Nidec SelecTech ECM Motors 34
- 8301-057 Airflow Differential/Dirty Filter Switch 36
- 8301-067 Outdoor Temperature/HumiditySensor 36
- 8408-044 Return Air Sensor/Suction Sensor 39

Alarm Index 40

Figures and Tables

Figure 1 MULTI-TEC Wall-Mount Unit Model Nomenclature 3
Figure 2 TEC-EYE Display and Interface 6
Figure 3 TEC-EYE Connection to Unit Control 6
Figure 4 Quick Menu Icons....8
Figure 5 Cooling and Heating Setpoints....8
Figure 6 Last 24 Hour Tracking....8
Figure 7 Last 24 Hour Tracking....8
Figure 8 Software Version Information 8
Figure 9 Alarm Log Screen Breakdown 8
Figure 10 Unit Configuration 9
Figure 11 Executing Self Test 10
Figure 12 Entering Model/Serial Number 10
Figure 13 Alarm Screen Breakdown....11
Figure 14 Clearing Alarms....11
Figure 15 Clearing Alarm Logs....11
Figure 16 Adjusting Mixed Air Alarm Values....12
Figure 17 Adjusting Damper Alarm Values 12
Figure 18 Adjusting Freeze Alarm Values 13
Figure 19 Blower Speeds 14
Figure 20 Balanced Climate Enable/Disable....15
Figure 21 Wall-Mount Unit Cooling Staging....15
Figure 22 Adjusting Cooling Differential Values 16
Figure 23 Adjusting Heating Differential Values 16
Figure 24 Wall-Mount Unit Heating Staging....16
Figure 25 Economizer A4 Screen 17
Figure 26 Economizer A5 Screen 17
Figure 27 Adjusting Damper Modulation Values....17
Figure 28 Making Adjustments to Unit Disable.... 18
Figure 29 Dehumidification Control....20
Figure 30 Wall-Mount Unit Control Board 21
Figure 31 8201-169 Compressor Control Module...26
Figure 32 Fan Blade Setting....27
Figure 33 Front Control Panel Cover....30
Figure 34 Removing Left Filter 30
Figure 35 Removing Second Filter 30
Figure 36 Filter Tabs in Up Position 30
Figure 37 Bend Filter Tabs Down 30
Figure 38 Remove Four Screws....31
Figure 39 Re-Install Filter Support Brackets into Lower Slots 31
Figure 40 Re-Install Screws and Bend Tabs Up....31
Figure 41 Install Right 2" Filter 31
Figure 42 Install Left 2" Filter 31
Figure 43 Dirty Filter Switch and Dirty Filter Indicator Light/Reset Switch....32
Figure 44 Adjusting Filter Switch....33
Figure 45 Motor Connections....34
Figure 46 Motor Connections....35
Figure 47 8301-057 Switch Terminals....36
Figure 48 8301-067 Sensor Dip Switches....36

Table 1 LC1000/TEC-EYE Passwords (Defaults) 7
Table 2 Wall-Mount Unit Status Messages 7
Table 3 Software Versioning Guide 9
Table 4 Unit Control Board Terminals....22
Table 5 MULTI-TEC Cooling Pressures....24
Table 6 W42-72AC* Optional Accessories 28
Table 7 8301-067 Sensor: Temperature/ Resistance....37
Table 8 8301-067 Sensor: Humidity/Voltage 38
Table 9 8408-044 Sensor: Temperature/ Resistance Curve J 39
Table 10 Wall-Mount Unit Alarm Index....40

FIGURE 1
MULTI-TEC W42-72AC Wall-Mount Unit Model Nomenclature

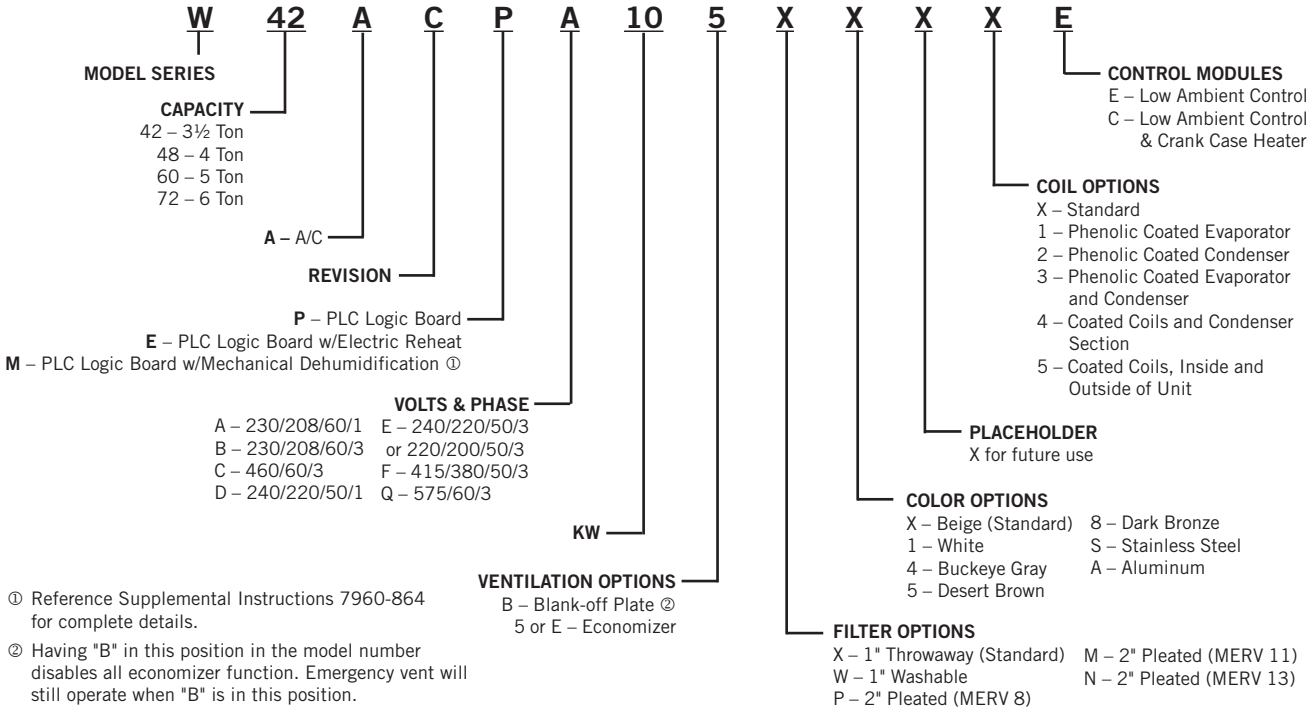

① Reference Supplemental Instructions 7960-864 for complete details.

② Having "B" in this position in the model number disables all economizer function. Emergency vent will still operate when "B" is in this position.

GENERAL INFORMATION

Air Conditioning System

The Bard air conditioning system is composed of MULTI-TEC wall-mounted air conditioners matched with an LC6000 supervisory controller, th-Tune single-unit controller or Bard PGD stand-alone display. If only one wall-mounted air conditioner is being used, it can be matched with either the LC6000 supervisory controller, th-Tune or PGD. If more than one wall-mount unit is installed, the LC6000 controller must be matched with the air conditioning units. The wall mounts are specifically engineered for telecom/motor control center rooms.

NOTE: *The LC6000 supervisory controller and MULTI-TEC wall-mount units are designed specifically to work together. The controller cannot run other brands of systems, nor can other controllers run the MULTI-TEC wall-mount units. They are a complete system, and must be used together.*

Wall-Mount Air Conditioner Units

The MULTI-TEC units are designed to supply full rated cooling airflow in free cooling mode with ability to exhaust the same amount through the unit itself without any additional relief openings in the shelter. In the event that free Cooling operation cannot satisfy the load requirements, mechanical cooling will be utilized to assist in cooling the shelter.

MULTI-TEC units are fully charged with refrigerant and have optional electric heat.

General

The equipment covered in this manual is to be installed by trained, experienced service and installation technicians.

The refrigerant system is completely assembled and charged. All internal wiring is complete.

The unit is designed for use with or without duct work. Flanges are provided for attaching the supply and return ducts.

These instructions explain the recommended method to install the air cooled self-contained unit and the electrical wiring connections to the unit.

These instructions and any instructions packaged with any separate equipment required to make up the entire air conditioning system should be carefully read before beginning the installation. Note particularly any tags and/or labels attached to the equipment.

While these instructions are intended as a general recommended guide, they do not supersede any national and/or local codes in any way. Authorities having jurisdiction should be consulted before the installation is made. See **Additional Publications** for information on codes and standards.

Sizing of systems for proposed installation should be based on heat loss and heat gain calculations made according to methods of Air Conditioning Contractors of America (ACCA). The air duct should be installed in accordance with the *Standards of the National Fire Protection Association for the Installation of Air Conditioning and Ventilating Systems of Other Than Residence Type, NFPA No. 90A*, and *Residence Type Warm Air Heating and Air Conditioning Systems, NFPA No. 90B*. Where local regulations are at a variance with instructions, installer should adhere to local codes.

Shipping Damage

Upon receipt of equipment, the cartons should be checked for external signs of shipping damage. If damage is found, the receiving party must contact the last carrier immediately, preferably in writing, requesting inspection by the carrier's agent.

These units must remain in upright position at all times.

Additional Publications

These publications can help when installing the air conditioner. They can usually be found at the local library or purchased directly from the publisher. Be sure to consult the current edition of each standard.

National Electrical Code.....ANSI/NFPA 70

Standard for the Installation of Air Conditioning and Ventilating Systems .....ANSI/NFPA 90A

Standard for Warm Air Heating and Air Conditioning Systems .....ANSI/NFPA 90B

Load Calculation for Residential Winter and Summer Air Conditioning ..... ACCA Manual J

Duct Design for Residential Winter and Summer Air Conditioning and Equipment Selection ..... ACCA Manual D

For more information, contact these publishers:

Air Conditioning Contractors of America (ACCA)
1712 New Hampshire Ave. N.W.
Washington, DC 20009
Telephone: (202) 483-9370 Fax: (202) 234-4721

American National Standards Institute (ANSI)
11 West Street, 13th Floor
New York, NY 10036
Telephone: (212) 642-4900 Fax: (212) 302-1286

American Society of Heating, Refrigeration and Air Conditioning Engineers, Inc. (ASHRAE)
1791 Tullie Circle, N.E.
Atlanta, GA 30329-2305
Telephone: (404) 636-8400 Fax: (404) 321-5478

National Fire Protection Association (NFPA)
Batterymarch Park
P. O. Box 9101
Quincy, MA 02269-9901
Telephone: (800) 344-3555 Fax: (617) 984-7057

ANSI Z535.5 Definitions:

DANGER: Indicate[s] a hazardous situation which, if not avoided, will result in death or serious injury. The signal word "DANGER" is to be limited to the most extreme situations. DANGER [signs] should not be used for property damage hazards unless personal injury risk appropriate to these levels is also involved.

WARNING: Indicate[s] a hazardous situation which, if not avoided, could result in death or serious injury. WARNING [signs] should not be used for property damage hazards unless personal injury risk appropriate to this level is also involved.

CAUTION: Indicate[s] a hazardous situation which, if not avoided, could result in minor or moderate injury. CAUTION [signs] without a safety alert symbol may be used to alert against unsafe practices that can result in property damage only.

NOTICE: [this header is] preferred to address practices not related to personal injury. The safety alert symbol shall not be used with this signal word. As an alternative to "NOTICE" the word "CAUTION" without the safety alert symbol may be used to indicate a message not related to personal injury.

DANGER

WARNING

CAUTION

NOTICE

⚠ WARNING

Electrical shock hazard.

Have a properly trained individual perform these tasks.

Failure to do so could result in electric shock or death.

⚠ WARNING

Electrical shock hazard.

Do not operate this equipment without an earth ground attached and always disconnect the remote electric power supplies before servicing.

Electrical shock can result in serious injury or death.

⚠ WARNING

Fire hazard.

Maintain minimum 1/4" clearance between the supply air duct and combustible materials in the first 3' feet of ducting.

Failure to do so could result in fire causing damage, injury or death.

⚠ WARNING

Heavy item hazard.

Use more than one person to handle unit.

Failure to do so could result in unit damage or serious injury.

⚠ CAUTION

Sharp metallic edges.

Take care and wear appropriate protective devices to avoid accidental contact with sharp edges.

Failure to do so can result in personal injury.

FIGURE 2
TEC-EYE (Bard P/N 8301-059) Display and Interface (Status Screen Shown)

ALARM KEY
Allows viewing of active alarms
Silences audible alarms
Resets active alarms

MENU KEY
Allows entry to Main Menu

ESCAPE KEY
Returns to previous menu level
Cancels a changed entry

UP KEY
Steps to next screen in the display menu
Changes (increases) the value of a modifiable field

ENTER KEY
Accepts current value of a modifiable field
Advances cursor

DOWN KEY
Steps back to previous screen in the display menu
Changes (decreases) the value of a modifiable field

TEC-EYE Hand-Held Service Tool

The TEC-EYE service tool is used to communicate with the MULTI-TEC unit logic board. By connecting directly to the logic board inside the unit control panel, it is possible to perform diagnostics on the unit, adjust certain settings and verify unit and economizer operation through a self test procedure. **The TEC-EYE service tool is required for unit setup and operation.** The TEC-EYE is supplied with the LC6000 controller but can also be ordered separately (Bard P/N 8301-059).

The menu driven interface provides users the ability to scroll through two menu levels: Quick Menu and Main Menu. The menus permit the user to easily view, control and configure the unit.

The controller is completely programmed at the factory; the default setpoints and their ranges are easily viewed and adjusted from the TEC-EYE display. The program and operating parameters are permanently stored on FLASH-MEMORY in case of power failure.

The TEC-EYE connects to the wall-mount unit control board via an RJ11 modular connector as shown in Figure 3.

When not being used, the TEC-EYE hand-held diagnostic tool should be stored inside or near the LC6000 controller. Do not let the TEC-EYE leave the shelter.

FIGURE 3
TEC-EYE Connection to Unit Control

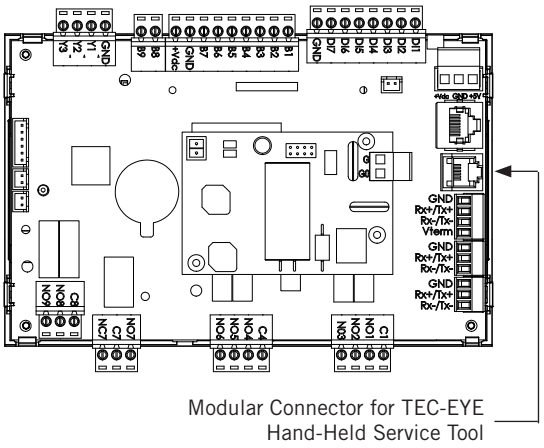

NOTE
Screenshots shown in this manual reflect default settings (when applicable).

TABLE 1
LC6000/TEC-EYE Passwords (Defaults)

User	2000
Technician	1313
Engineer	9254
Use UP or DOWN keys and ENTER key to enter password	

TEC-EYE Screen Structure and Password Level

Quick Menu
- Setpoints (Stand Alone Temperature Control)
- Information
- Alarm Log

Main Menu
- **A** System Config: A1-A11 User (2000)
- **B** Adv Sys Config: B1-B5 Technician (1313)
- **C** I-O Config: C1-C9 Technician (1313)
- **D** On/Off: User (2000)
- **E** Alarm Logs: User (2000)
- **F** Settings
  - Date/Time: Technician (1313)
  - Language: User (2000)
  - Initialization
    - Clear Logs: User (2000)
    - System Default: Engineer (9254)
    - Alarm Export: User (2000)
    - 7 Day I/O Log: User (2000)
- **G** Logout

In addition to the menu structure above, there are also Status and Alarm screens.

TEC-EYE Acronyms

MAT – Mixed air temperature
RAT – Return air temperature
OAT – Outdoor air temperature
OAH – Outdoor air humidity
Blower – Indoor Blower Status
Damper – Free cooling damper position status
C1 – Compressor activate status
H1 – Heater Stage 1 status
H2 – Heater Stage 2 status
ODP – Calculated outdoor dew point
FC – Free cooling status
RN – Component run time in minutes in last hour
ST – Number of start requests in last hour

Status Screen

The Status screen is the default start-up screen and also the return screen after 5 minutes of no activity. The screen can be accessed any time by pressing the ESCAPE button repeatedly.

The wall-mount unit address is displayed in the upper right corner on the Status screen (see Figure 2). The Status screen also shows the current date, time, return air temperature, mixed air temperature, outdoor air temperature, outdoor humidity and outdoor dewpoint conditions. Blower, damper and unit status are also displayed. See Table 2 for MULTI-TEC wall-mount unit status messages.

TABLE 2
Wall-Mount Unit Status Messages

Message	Description
Invalid Model #	Unit disabled due to faulty model number.
Orphan Mode	Unit is not currently communicating with an LC6000 or th_Tune device.
th-Tune Online	Communication with th_Tune device is established; unit in standby (no current calls).
LC Online	Communication with LC6000 is established; unit in standby (no current calls).
Cont. Blower	Continuous blower is active.
Off by th-Tune	Unit has been commanded off by the th_Tune.
Freecooling	Economizer is active.
Optimized Cool	Economizer and mechanical cooling are active.
Cooling	Mechanical cooling is active.
Heating	Electric or mechanical heat is active.
Active Dehum	Mechanical dehumidification or electric reheat dehumidification is active.
Passive Dehum	Humidity is above the passive set point; economizer disabled/blower speed reduced. See **Balanced Climate Mode** on page 14.
Self Test	Self test in operation.
Off by Alarm	All functions/modes of operation are disabled by one the following alarms: Return Air, Emergency Off, Unit Disable or Valid Model #.
Off by BMS	Unit has been set to off by BMS system (Modbus); all functions/ modes of operation are disabled.
Off by LC	Unit is commanded off by LC6000; all functions/modes of operation are disabled.
Off by Keypad	Unit has been turned off in TEC-EYE menu; all functions/modes of operation are disabled.
Emergency Vent	Emergency vent mode is active. See LC manual 2100-669.
Emergency Cool	Emergency cooling mode is active.
Emergency Off	Emergency off mode is active. See LC manual 2100-669.

The Quick Menu is displayed in the bottom right corner of the status screen (see Figure 2 on page 6). Alarm Log, Unit Information and Setpoints are available through the Quick Menu. Pressing the UP or DOWN keys while on the Status screen will change the Quick Menu icon displayed (see Figure 4). Press the ENTER key when the desired icon is displayed.

FIGURE 4
Quick Menu Icons

Quick Menu

Setpoints

If at any time the unit(s) loses communication with the LC6000 controller, the unit(s) will go to orphan mode. The setpoints are synced with the LC6000 when communication is established. The unit will save and control to these values until communication is re-established.

To change the cooling and heating setpoints:

1. From the Status screen, press UP or DOWN key until Quick Menu displays Setpoints icon. Press ENTER key.
2. Press ENTER key to scroll to the selected choice (see Figure 5).
3. Press UP or DOWN key on desired value until value displays correctly.
4. Press ENTER key to submit value and move to next parameter.
5. Press ESCAPE key until Main Menu screen is displayed.

FIGURE 5
Cooling and Heating Setpoints

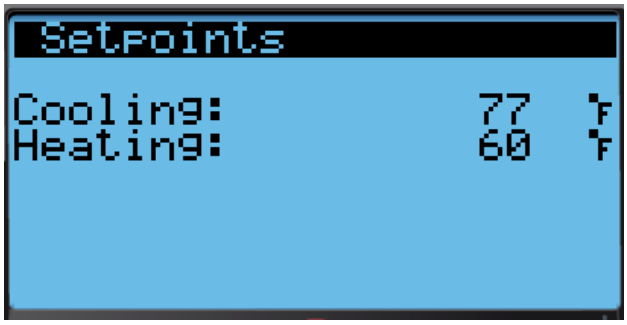

Information

These screens show unit run hours, averages and software version information (see Figures 6, 7 and 8).

FIGURE 6
Last 24 Hour Tracking

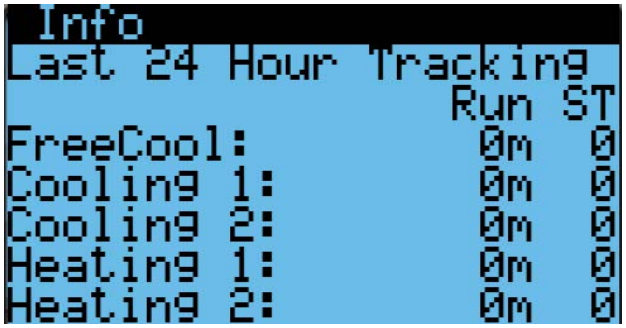

FIGURE 7
Last 24 Hour Tracking

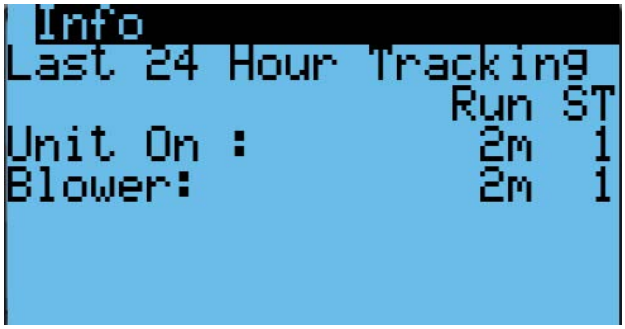

FIGURE 8
Software Version Information

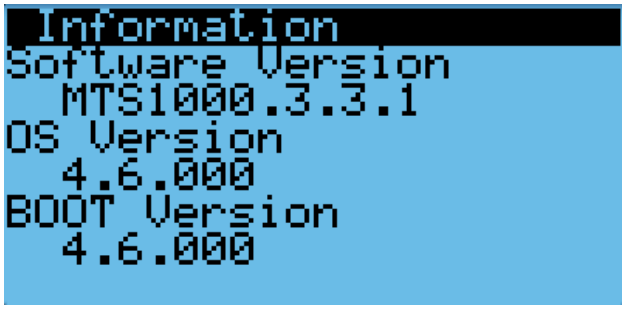

Alarm Log

The alarm log screens show a log of each alarm (see Figure 9. There will be a log for when alarm occurred and if the alarm auto clears, it will show when the alarm cleared. See page 11 for instructions on clearing the alarm logs.

FIGURE 9
Alarm Log Screen Breakdown

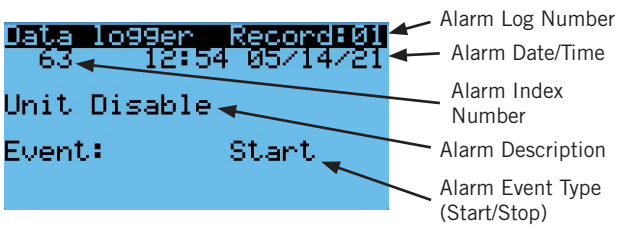

Addressing Wall-Mount Units

Each unit must have a unique address for the system to operate correctly with the LC controller (*Ex: 1, 2, 3, ...14 depending on the number of units*). The wall-mount unit address is displayed in the upper right corner on the Status screen on the TEC-EYE display (see Figure 2 on page 6).

To change the unit address:

1. Press MENU key to access the Main Menu screen.
2. Press UP or DOWN keys and ENTER key to enter USER password 2000.
3. Press UP or DOWN keys to scroll to **Sys Config**; press ENTER key.
4. Press ENTER key to scroll to **Unit Address (**see Figure 10).
5. Press UP or DOWN keys to change the address to a value between 1 and 14.

NOTE: *Each unit must have a unique address for the communication to work properly. Bard also recommends physically labeling each unit for ease in identification.*

FIGURE 10
Unit Configuration

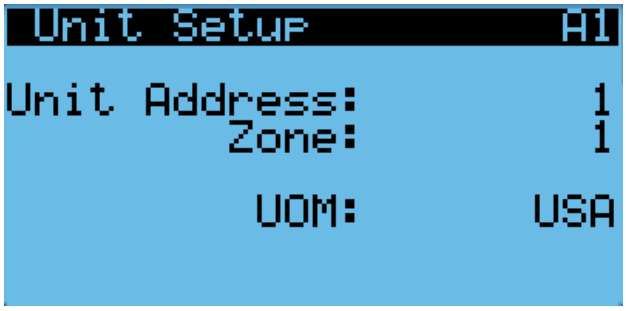

Setting Unit Zone

To assign zones:

1. Press MENU key to access the Main Menu screen.
2. Press UP or DOWN keys and ENTER key to enter USER password 2000.
3. Press UP or DOWN keys to scroll to **Sys Config**; press ENTER key.
4. Press ENTER key to scroll to **Unit Zone** (see Figure 10).
5. Press UP or DOWN keys to change value to desired zone.

Additional Features

Software Versioning Guide

MTS1000.X.Y.Z

Software Name: The name of the software is the base part number used to identify which product the software is used in.

TABLE 3
Software Versioning Guide

Product	Software Name
MULTI-TEC	MTS1000
FUSION-TEC (WR)	WTS1000
MEGA-TEC	MGS1000
LC6000	LCS6000

X The letter X represents a major change to the software effecting product compatibility or function of the equipment.

Y The letter Y represents a minor change to the software that either adds, removes, or alters a feature of the equipment without effecting compatibility with other products.

Z The letter Z represents a change to the software that fixes existing features or user interface.

NOTICE

It is important to check the software version during installation to ensure that the latest version has been installed. Current software versions and installation instructions are available on the Bard website at http://www.bardhvac.com/software-download/

Model/Serial Number Retain

Model numbers and serial numbers will be retained through most software updates. It still remains good practice to verify the software version, model numbers and serial numbers of any wall-mount unit after a software update, as some functionality of the MULTI-TEC wall-mount unit require a specific model number.

Model Number Verification

The MULTI-TEC software will check the entered model number against available unit sizes/configurations. If there is an issue with model configuration, the unit will display Invalid Model # as the Unit Status and an alarm will turn off the unit to prevent damage to the unit.

Time/Date/Timezone Sync

On MULTI-TEC wall-mount unit models with a software version number MTS1000.2.0.0 and higher, when the wall-mount unit is connected and correctly addressed to a LC6000 supervisory controller, local time, date, and timezone information will be synced from the LC6000. This feature allows for faster set-up and correct correlation between alarm logs.

Executing a Self Test

Execute a self test on each unit to verify the equipment is functioning correctly.

1. Press MENU key to access the Main Menu screen.
2. Press UP or DOWN keys and ENTER key to enter USER password 2000.
3. Press UP or DOWN keys to scroll to **Sys Config**; press ENTER key.
4. Press UP or DOWN keys to scroll to **Self Test (A11)** screen.
5. Press ENTER key to scroll to **Self Test Enable** parameter (see Figure 11).
6. Press UP or DOWN key to change value to ON. The self test will begin.

FIGURE 11
Executing Self Test

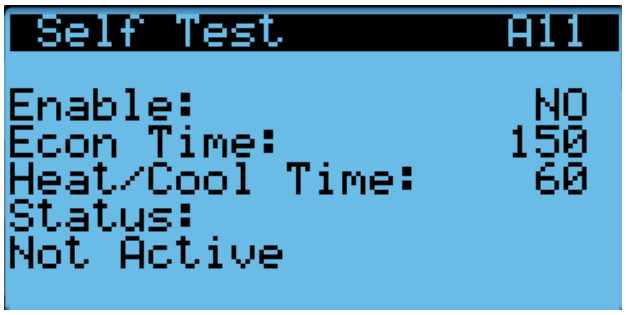

Step	Action	Time Required
A	Open economizer damper	Damper Time (150s)
B	Close economizer Damper	Damper Time (150s)
C	Turn on compressor	Heat/Cool Time (60s)
D	Enable second stage	Heat/Cool Time (60s)
E	Open reheat valve	Heat/Cool Time (60s)
F	Turn all cooling off	--
G	Turn on electric heat	Heat/Cool Time (60s)
H	Turn on electric heat stage 2	Heat/Cool Time (60s)
I	Turn off all heating	--

Parameter Description

Damper Time: This is the time (in seconds) allowed for both the opening sequence and closing sequence.

Heat/Cool Time: This is the time (in seconds) allowed for cooling sequence and heating sequence.

Status: This will display what the unit is doing as the self test progresses. The following messages may appear:

1. Not Active
2. Opening Damper
3. Closing Damper
4. Compressor Stage 1
5. Compressor Stage 2
6. Reheat Valve Open
7. Cooling Off
8. Electric Heat Stage 1
9. Electric Heat Stage 2
10. Heating Off
11. Self Test Stop

The unit will determine which items to test based on the unit model number.

Changing Free Cooling Type

The comparative enthalpy free cooling setting can be changed to dry bulb free cooling using the TEC-EYE hand-held diagnostic tool.

1. Press MENU key to access the Main Menu screen.
2. Press UP or DOWN keys and ENTER key to enter USER password 2000.
3. Press UP or DOWN keys to scroll to **Sys Config**; press ENTER key.
4. Press UP or DOWN keys to scroll to screen with **Free Cooling Config** heading.
5. Press ENTER key to scroll to parameter type.
6. Press UP or DOWN keys to change to desired value.
7. Press ENTER key to save.
8. Press ESCAPE key until Main Menu screen is displayed.

Entering Model/Serial Number

To enter or change the model or serial number manually:

1. Press MENU key to access the Main Menu screen.
2. Press UP or DOWN keys and ENTER key to enter USER password 2000.
3. Press UP or DOWN keys to scroll to **Adv Sys Config**; press ENTER key.
4. Press UP or DOWN keys followed by ENTER key for each character in the serial number (see Figure 12). Once the serial number has been fully entered, the cursor will automatically cycle on to **Model Number**. Repeat the same process to enter the model number.

FIGURE 12
Entering Model/Serial Number

NOTE: *Screenshots shown in this manual reflect default settings (when applicable).*

Acknowledging/Clearing Alarms

Alarm conditions activate a red LED indicator that backlights the ALARM function key. As an option, an alarm condition may also be enunciated by an audible alarm signal. An alarm is acknowledged by pressing the ALARM key. This calls up alarm display screen(s) that provide a text message detailing the alarm condition(s)—as shown in Figure 13.

FIGURE 13
Alarm Screen Breakdown

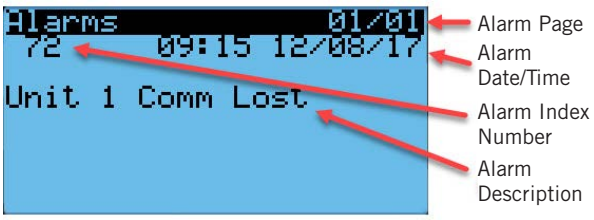

The MULTI-TEC wall-mount unit alarm index can be found on page 36.

Clearing Alarms

After an alarm condition has been corrected, the alarm can be cleared/reset.

To clear alarms, press the ALARM key and the UP or DOWN keys to scroll to the alarm reset screen (see Figure 14). Hold down the ALARM key for 3 seconds until the screen flashes. After the screen flashes, if all alarms are able to be cleared, the screen should read NO ALARMS. If there are still active alarms, the screen will show the first indexed alarm.

FIGURE 14
Clearing Alarms

Clearing Alarm Logs

To clear the alarm logs:

1. Press MENU key to go to the Main Menu screen.
2. Press UP or DOWN keys and ENTER key to enter TECHNICIAN password 1313.
3. Press UP or DOWN keys to scroll to **Settings**; press ENTER key.
4. Press UP or DOWN keys to scroll to **Initialization**; press ENTER key.
5. Press UP or DOWN keys to scroll to **Initialization**; press ENTER key.
6. Press ENTER key to scroll to **Delete alarm logs?** (see Figure 15).
7. Press UP or DOWN key to change from **NO** to **YES**.
8. Press ENTER key to clear all alarm logs.

FIGURE 15
Clearing Alarm Logs

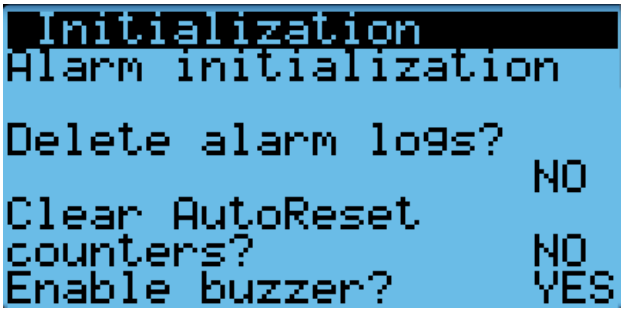

Alarm Adjustment

Mixed Air Alarm

The mixed air alarm is used to indicate proper operation of the economizer. An alarm will be generated when the mixed air temperature is above or below two independent setpoints.

This alarm can be adjusted by changing the alarm setpoints and/or delay. The differential low references the economizer control setpoint. For example, if the economizer setpoint is 55°F (as shown in Figure 24 on page 17) and the differential is set to 10, the lower limit for the mixed air alarm would be 45°F. The high differential references the outdoor air temperature setpoint that enables the economizer. For example, if the outdoor air temperature setpoint for economizer enable is set to 65°F and the high alarm is set to 5, the alarm would actuate at 70°F. The alarm also has a delay to help reduce nuisance alarms. With the delay set to 120 seconds, either the high mixed air or low

mixed air alarm will need to be active for 120 seconds before an alarm will be generated.

To adjust these values:

1. Press MENU key to go to the Main Menu screen.
2. Press UP or DOWN keys and ENTER key to enter USER password 2000.
3. Press UP or DOWN keys to scroll to **Sys Config**; press ENTER key.
4. Press UP or DOWN keys to scroll to **Alarm Config (A7)**; press ENTER key.
5. Press ENTER key to scroll to desired value **Diff Lo**, **Diff Hi** or **Del** (see Figure 16).
6. Press UP or DOWN keys to adjust value.
7. Press ENTER key to save.

FIGURE 16
Adjusting Mixed Air Alarm Values

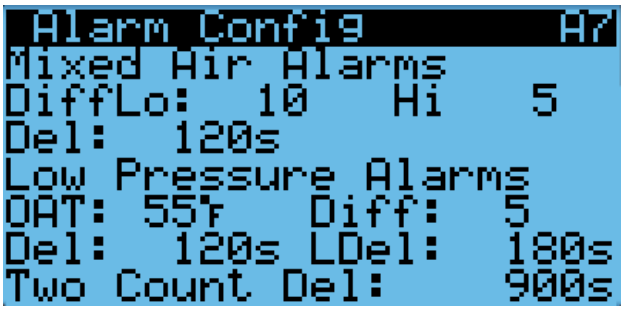

Refrigerant Low Pressure

When the low pressure switch indicates a low pressure condition and there is an active call for cooling, the controller will generate an alarm (after a delay). The delay used by the low pressure alarm is determined by the outdoor air temperature (OAT on display). If the outdoor air temperature is below 55°F, the delay is 180 seconds (LDel on display). If the outdoor temperature is above 55°F, the delay is 120 seconds (Del on display). The unit will also have an address-based delay that will affect start up time; the default is 5 seconds multiplied by unit address. (The unit address-based delay is only when the unit is in orphan mode operation.) Additionally, if the outdoor temperature sensor is not used, the delay is set to 180 seconds. The controller will try to run the refrigeration system two times before the alarm will lock the compressor out.

If 15 minutes (Two Count Del value on display) passes before the second attempt, the number of tries will be reset.

To adjust these values:

1. Press MENU key to go to the Main Menu screen.
2. Press UP or DOWN keys and ENTER key to enter USER password 2000.
3. Press UP or DOWN keys to scroll to **Sys Config**; press ENTER key.
4. Press UP or DOWN keys to scroll to **Alarm Config (A7)**; press ENTER key.
5. Press ENTER key to scroll to desired value **OAT**, **Diff**, **Del**, **LDel** or **Two Count Del** (see Figure 16).
6. Press UP or DOWN keys to adjust value.
7. Press ENTER key to save.

Refrigerant High Pressure

When the wall-mount unit receives a signal from the compressor control module (CCM) indicating a high pressure event, the wall-mount unit will generate an alarm. Upon receiving the alarm, the wall-mount unit will remove the “Y” call from the CCM, resetting the status of the CCM. The alarm will stay present on the wall-mount unit until manually cleared. This operation has no configurable parameters.

Economizer Damper

When the controller commands the economizer damper actuator to a position other than 0% and the damper switch indicates the damper is not open, after a delay of 120 seconds (Open Del on display) the controller will generate a damper failed to open alarm. When the controller commands the economizer damper actuator to the 0% position and the damper switch indicates the damper is not closed, after a delay of 300 seconds (Close Del on display) the controller will generate a damper failed to close alarm.

To adjust these values:

1. Press MENU key to go to the Main Menu screen.
2. Press UP or DOWN keys and ENTER key to enter USER password 2000.
3. Press UP or DOWN keys to scroll to **Sys Config**; press ENTER key.
4. Press UP or DOWN keys to scroll to **Alarm Config (A8)**; press ENTER key.
5. Press ENTER key to scroll to desired value **Open Del** or **Close Del** (see Figure 17).

FIGURE 17
Adjusting Damper Alarm Values

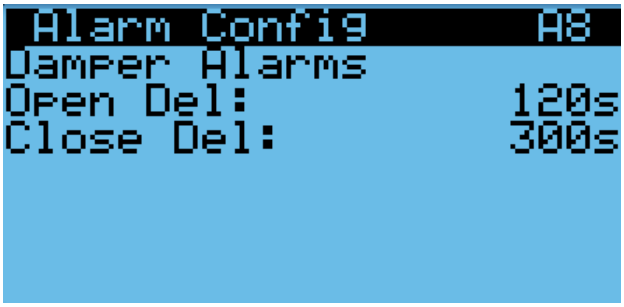

6. Press UP or DOWN keys to adjust value.
7. Press ENTER key to save.

Freezestat

When the coil temperature is below 30°F, the unit will generate a Freeze alarm on the TEC-EYE and a Freeze Temp alarm on the LC6000. This will operate the blower and turn off the compressor.

The alarm will be automatically reset when the coil temperature rises above 55°F or after a 5-minute delay while the temperature is above 30°F.

To adjust freezestat values:

1. Press MENU key to go to the Main Menu screen.
2. Press UP or DOWN keys and ENTER key to enter USER password 2000.
3. Press UP or DOWN keys to scroll to **Sys Config**; press ENTER key.
4. Press UP or DOWN keys to scroll to **Alarm Config (A9)**; press ENTER key.
5. Press ENTER key to scroll to desired value **Low Temp**, **Delay**, **Reset Temp** or **Reset Del** (see Figure 18).
6. Press UP or DOWN keys to adjust value.
7. Press ENTER key to save.

FIGURE 18
Adjusting Freeze Alarm Values

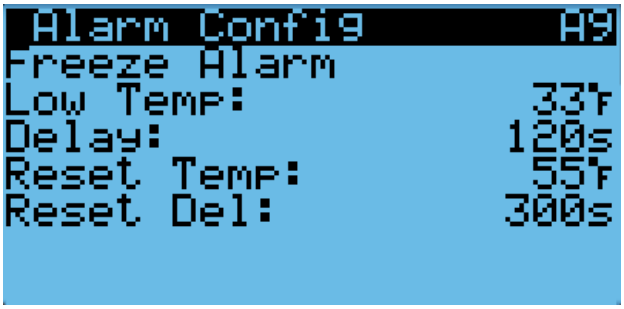

NOTE: *Screenshots shown in this manual reflect default settings (when applicable).*

On/Off Control

The wall-mount unit can be turned on and off with the TEC-EYE. When the unit is set to ON, the system will heat and cool the space either in orphan mode or when connected to the LC. When the unit is set to OFF, the unit will not heat or cool the space.

To turn the unit on or off:

1. Press MENU key to go to the Main Menu screen.
2. Press UP or DOWN keys and ENTER key to enter USER password 2000.
3. Press UP or DOWN keys to scroll to **ON/OFF**; press ENTER key.
4. Press UP or DOWN key to change the system from OFF to ON or from ON to OFF.
5. Press ESCAPE key until Main Menu screen is displayed.

Blower Control

The blower will be in continuous operation in orphan mode. To operate the blower continuously while communicating with the LC6000 or PGD stand-alone display, refer to the latest version of the 2100-669 LC6000 Service Instructions manual or 2100-678 th-Tune manual.

The 11EER MULTI-TEC wall-mount unit is equipped with an ECM 5-speed blower. Three different speeds are used: Low for Balanced Climate, nominal for normal blower operation and high for high sensible (see Figure 19).

FIGURE 19
Blower Speeds

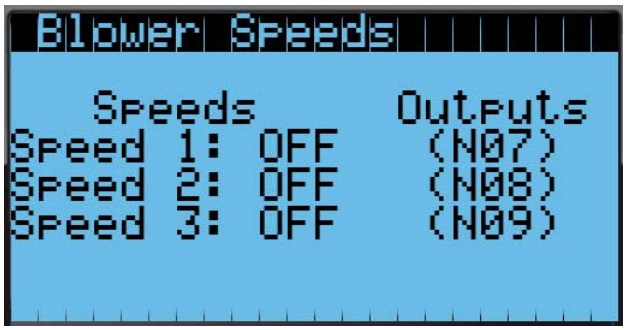

Blower Speed 1: Balanced Climate (N07)

This blower speed is available when the unit is in passive dehumidification and there is a cooling or heating call.

Blower Speed 2: Nominal (N08)

This blower speed is available when the unit is in cooling, heating, orphan mode, freeze condition, free cool or continuous blower.

Blower Speed 3: High Sensible (N09)

This blower speed is available when the unit is in high sensible mode, which is selectable from the LC6000 controller, and cooling mode is active.

The Balanced Climate (blower speed 1) and high sensible (blower speed 3) are only available when connected to the LC6000 controller.

IMPORTANT: *If the unit model number does not have the letter C as the fifth character (Ex. W36AC<u>C</u>P...), the blower will not run in orphan mode.*

Balanced Climate Mode

MULTI-TEC Series wall-mount units offer an enhanced latent capacity that can be controlled by an LC6000 controller. When passive dehumidification (Balanced Climate mode) is active on the LC6000 controller, the unit will increase the amount of moisture removed during compressor operation. When high sensible mode is enabled on the LC6000 controller, this mode increases the sensible cooling capacity to increase the amount of heat removed from the structure during compressor operation.

Balanced Climate Enable/Disable

When the MULTI-TEC is connected to an LC6000 controller, Balanced Climate mode can be enabled or disabled. Balanced Climate mode is disabled by default.

To enable or disable Balanced Climate mode:

1. Press MENU key to access the Main Menu Screen.
2. Press UP or DOWN keys and ENTER key to enter USER password 2000.
3. Press UP or DOWN keys to scroll to **Adv Sys Config**; press ENTER key.
4. Press UP or DOWN keys to scroll to **Blower Settings (B5)**
5. Press UP or DOWN keys to scroll to **Balanced Climate** (see Figure 20).
6. Press UP or DOWN keys to adjust value.
7. Press ENTER key to save.

FIGURE 20
Balanced Climate Enable/Disable

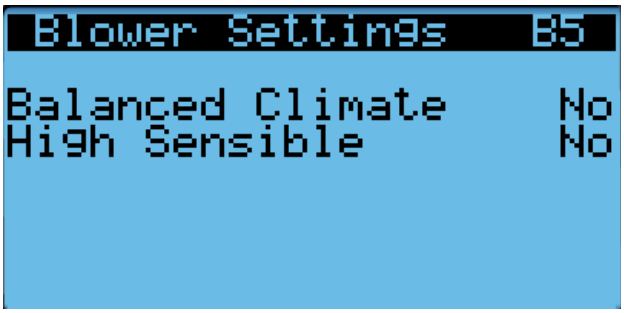

Temperature Control

When the unit is connected to the LC controller, it will receive all of its heating, cooling and ventilation commands from the controller.

When the unit is in orphan mode, it will heat, cool and ventilate based on the return air temperature measurement. The return air temperature will be compared to the cooling setpoint. Based on differentials above and below the setpoint, the available cooling and heating stages will be utilized.

Cooling Sequence – Economizer Available
(see Figure 21)

If the return air temperature is higher than 79°F (Setpoint + Stage 1 Diff On) and outdoor conditions are acceptable for economizing, the unit will enable the economizer. If the return air temperature is higher than 80°F (Setpoint + Stage 2 Diff On), the unit will enable mechanical cooling stage 1. If the control value is higher than 81°F (Setpoint + Stage 3 Diff On), the unit will enable mechanical cooling stage 2.

Cooling Sequence – Economizer Not Available
(see Figure 21)

If the return air temperature is higher than 79°F (Setpoint + Stage 1 Diff On), the unit will enable stage 1 mechanical cooling. If the return air temperature is higher than 80°F (Setpoint + Stage 2 Diff On), the unit will enable stage 2 mechanical cooling.

To adjust these parameters:

1. Press MENU key to go to the Main Menu screen.
2. Press UP or DOWN keys and ENTER key to enter USER password 2000.
3. Press UP or DOWN keys to scroll to **Sys Config**; press ENTER key.
4. Press UP or DOWN keys to scroll to **Cooling Setup (A2)**; press ENTER key.
5. Press ENTER key to scroll to **Stage 1 Diff On**, **Stage 1 Diff Off**, **Stage 2 Diff On**, **Stage 2 Diff Off**, **Stage 3 Diff On** or **Stage 3 Diff Off** (see Figure 22 on page 16).
6. Press UP or DOWN keys to adjust value.
7. Press ENTER key to save.

FIGURE 21
MULTI-TEC Wall-Mount Unit Cooling Staging

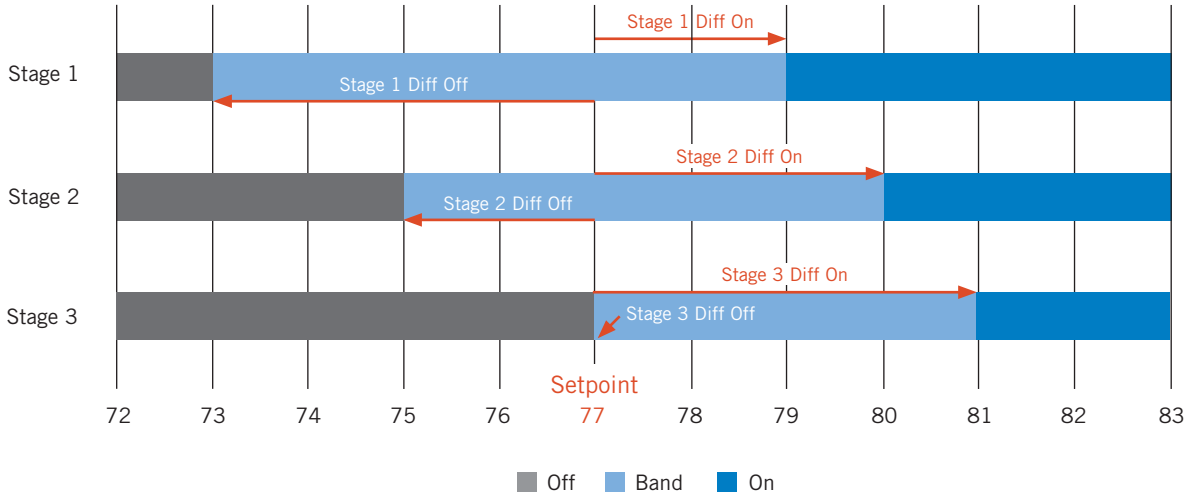

NOTE: *Stages available are based on unit configuration. Example: If the unit has a single stage compressor with a blank-off plate (no economizer), there will be only one stage available for cooling. If there is a two stage compressor with an economizer, it will operate all three stages when free cooling is available, or two stages when free cooling is not available.*

FIGURE 22
Adjusting Cooling Differential Values

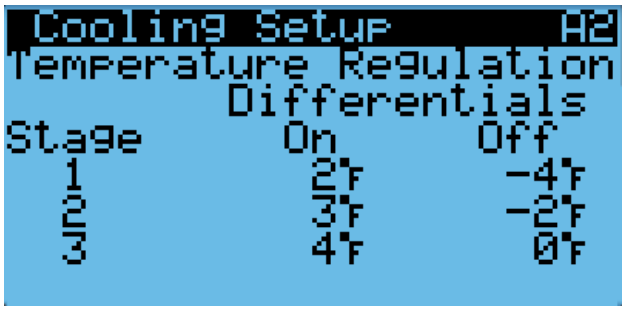

Heating Sequence *(see Figure 24)*

If the return air temperature is below 58°F (Setpoint + Stage 1 Diff On), the unit will enable electric heat stage 1. If the return air temperature is below 57°F (Setpoint + Stage 2 Diff On), the unit will enable electric heat stage 2. If the control value is below 56°F (Setpoint + Stage 3 Diff On), the unit will enable electric heat stage 3.

To adjust these parameters:

1. Press MENU key to go to the Main Menu screen.
2. Press UP or DOWN keys and ENTER key to enter USER password 2000.
3. Press UP or DOWN keys to scroll to **Sys Config**; press ENTER key.
4. Press UP or DOWN keys to scroll to **Heating Setup (A3)**; press ENTER key.
5. Press ENTER key to scroll to **Stage 1 Diff On**, **Stage 1 Diff Off**, **Stage 2 Diff On**, **Stage 2 Diff Off**, **Stage 3 Diff On** or **Stage 3 Diff Off** (see Figure 23).
6. Press UP or DOWN keys to adjust value.
7. Press ENTER key to save.

FIGURE 23
Adjusting Heating Differential Values

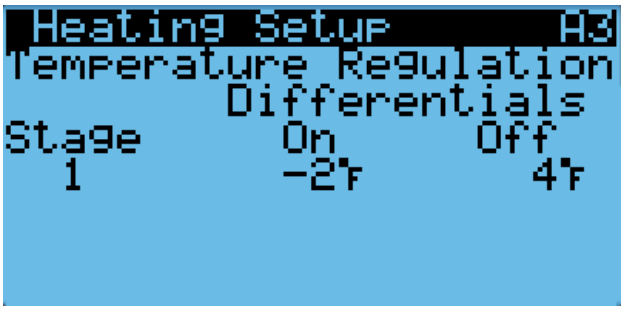

Free Cooling

If the unit is equipped with an economizer, and conditions are acceptable for economizer operation, the MULTI-TEC wall-mount unit will utilize free cooling operation before the use of any cooling operation requiring compressor operation to reduce the energy required to cool the indoor space.

Economizer Disable

There are two methods to disable the economizer if the use of free cooling is restricted. The first method is to select None as the economizer type within the **Sys Config** menu. The second method requires changing the model number within the **Adv Sys Config** menu to reflect a model installed with a blank-off plate (see model nomenclature in Figure 1 on page 3). Changing the wall-mount unit model number to reflect a unit with a blank-off plate will not allow for an economizer type

FIGURE 24
MULTI-TEC Wall-Mount Unit Heating Staging

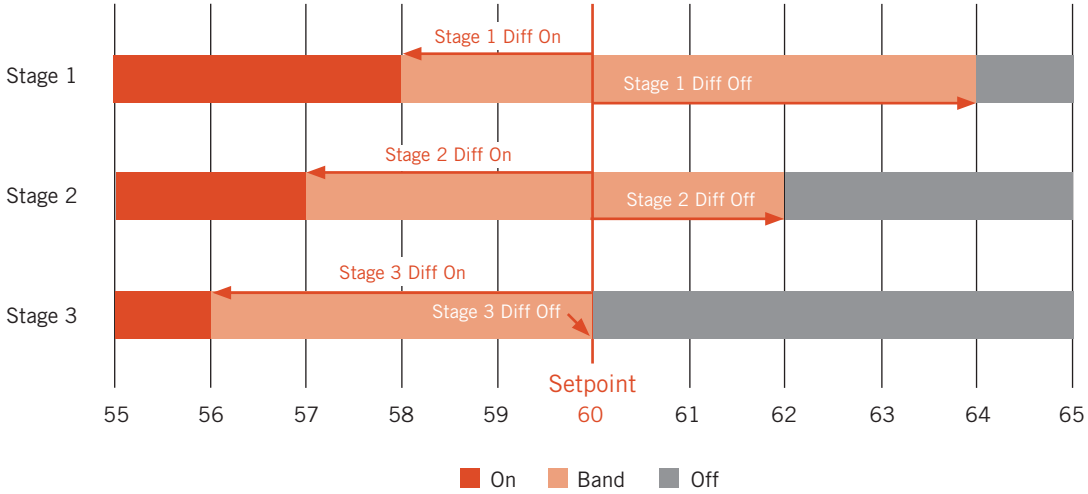

NOTE: *Stages available are based on unit configuration. Example: If only a single stage of heat is present, only a single stage of heat will be considered for heating operation.*

to be selected therefore defaulting to a disabled state, along with all sensors/alarms associated with it.

Economizer Enable

The economizer will be enabled for cooling operation if the model number reflects a wall-mount unit with an economizer installed, an economizer type other than None and the conditions for the economizer type are met. The following list explains the economizer types and the parameters required for operation. See also Figures 25 and 26.

FIGURE 25
Economizer A4 Screen

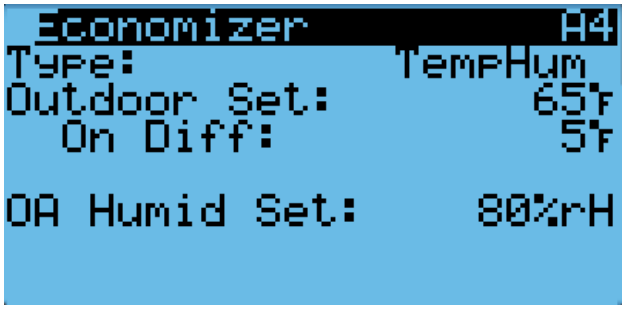

FIGURE 26
Economizer A5 Screen

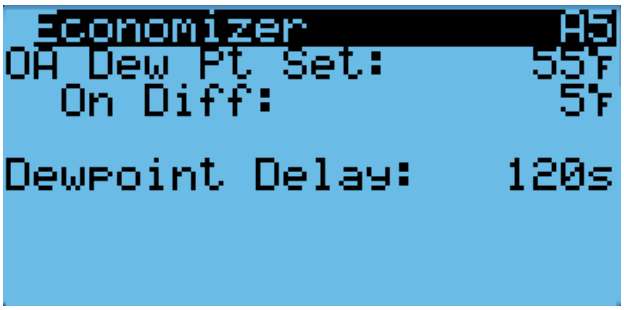

None

Economizer will not be enabled for free cooling operation.

Drybulb Only

1. Outdoor air temperature is below the Outdoor Set outdoor temperature setpoint listed within the **Sys Config** menu. (Outdoor Set temperature setpoint is 70°F by default.)
2. LC6000 is not currently in any dehumidification mode.
3. LC6000 is not currently in any emergency mode.

Temperature and Humidity (Default)

1. Outdoor air temperature is below the Outdoor Set outdoor temperature setpoint listed within the **Sys Config** menu. (Outdoor Set temperature setpoint is 70°F by default.)
2. Outdoor relative humidity is below the OA Humid Set outdoor humidity setpoint listed within the **Sys. Config** menu. (OA Humid Set humidity setpoint is 80% RH by default.)
3. LC6000 is not currently in any dehumidification mode.
4. LC6000 is not currently in any emergency mode.

Enthalpy

1. Outdoor air temperature is below the Outdoor Set, outdoor temperature setpoint, listed within the **Sys Config** menu. (Outdoor Set temperature setpoint is 70°F by default.)
2. Outdoor relative humidity is below the OA Humid Set outdoor humidity setpoint listed within the **Sys. Config** menu. (OA Humid Set humidity setpoint is 80% RH by default.)
3. The outdoor air dewpoint is below the OA Dew Pt Set outdoor dewpoint setpoint, listed within the **Sys Config** menu. (OA Dew Pt Set dewpoint setpoint is 55°F by default.).
4. LC6000 is not currently in any dehumidification mode.
5. LC6000 is not currently in any emergency mode.

Economizer Modulation

The economizer damper output will modulate between 0% and 100% to maintain a 55°F mixed air temperature when the outdoor air conditions are acceptable.

To adjust damper modulation values:

1. Press MENU key to go to the Main Menu screen.
2. Press UP or DOWN keys and ENTER key to enter USER password 2000.
3. Press UP or DOWN keys to scroll to **Sys Config**; press ENTER key.
4. Press UP or DOWN keys to scroll to **Unit Config (A6)**; press ENTER key.
5. Press ENTER key to scroll to **Mixed FC Set**, **Gain**, **Integral**, **Derivative** or **Min Position** (see Figure 27).

FIGURE 27
Adjusting Damper Modulation Values

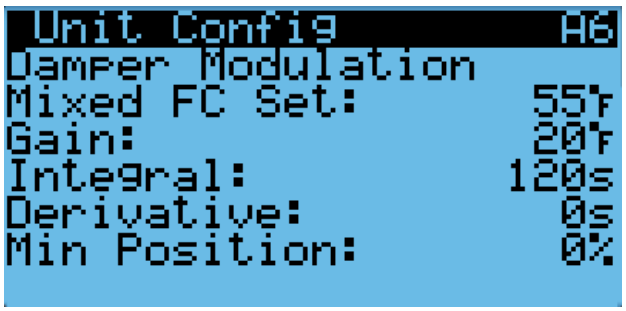

6. Press UP or DOWN keys to adjust parameter value.
7. Press ENTER key to save.

Economizer Note

The economizer and mechanical cooling can operate simultaneously because the economizer uses the mixed air temperature sensor.

Emergency Cooling

When return air temperature rises above 95°F, the unit will enter emergency cooling mode and an alarm will be displayed (unit can also be commanded by LC6000 to enter emergency cooling mode). In emergency cooling mode, if the unit is equipped with an economizer (and the model does not indicate a blank off plate), the economizer operation will ignore current setpoints. If the return air temperature is above the outdoor air temperature, the economizer will open and the unit will enter optimized cooling. If at any point the return air temperature falls below the outdoor air temperature or the mixed air temperature falls below 65°F, the economizer will close. This is done in an effort to cool the space as quickly and efficiently as possible. This feature will be disabled by a model number indicating a blank off plate (model # position 10 set to 'B') which disables all economizer function.

Unit Disable

The wall-mount unit can be disabled by opening a dry set of contacts connected to Input DI1 on the PLC board. This feature can be used in addition to the emergency off feature provided by the LC6000 to ensure that the unit does not operate even when in orphan mode. This feature is disabled by default and must be enabled before the input will affect unit operation. When the input detects open contacts, all unit operation will stop and the dampers will close. This is an automatic reset feature that will resume operation as soon as the unit detects the contacts are closed again.

For applications that require the dampers to close rapidly, an additional relay should be installed that either breaks the 24VAC power supply to each actuator or breaks the low voltage power supply to all units. In normal operation, the dampers can take up to 2 minutes to close from fully open. When the 24VAC power is removed from the actuator, the dampers will close in under 30 seconds using the spring return on the actuator.

NOTE: *Alarm logging and trend logging will not be available if power is removed from the controller and unit offline alarms will be recorded on the LC6000.*

To make adjustments to the unit disable option:

1. Press MENU key to go to the Main Menu screen.
2. Press UP or DOWN keys and ENTER key to enter USER password 2000.
3. Press UP or DOWN keys to scroll to **IO Config**; press ENTER key.
4. Press UP or DOWN keys to scroll to **Digital In Config C1**; press ENTER key.
5. Press ENTER key to scroll to the variable in the table that intersects **Disable** and **Dir** (see Figure 28).
6. Press UP or DOWN keys to change the direction value from **NO** to **NC** or **NC** to **NO**.
7. Press ENTER key to scroll to the variable in the table that intersects **Disable** and **En**.
8. Press UP or DOWN keys to change the enable value from **On** to **Off** or **Off** to **On**; press ENTER key.
9. Press ESCAPE key several times to return to the main menu.

FIGURE 28
Making Adjustments to Unit Disable

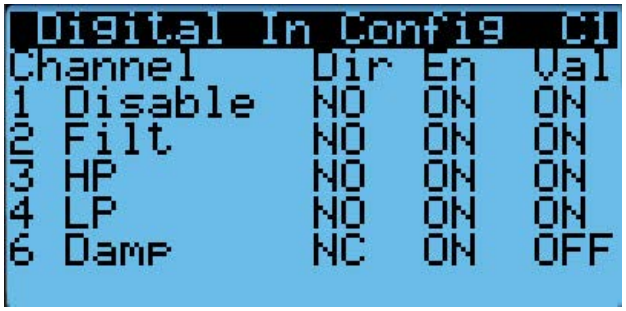

Compressor

Enable

The compressor will be enabled when stage 1 is enabled and outdoor air conditions are not acceptable for economizing. If the outdoor conditions are acceptable, the compressor will run when stage 2 is enabled.

Delays and Run Time

The compressor will have a minimum run time of 180 seconds and a minimum off time of 120 seconds. If the compressor is two stage, the second stage will have a minimum delay of 120 seconds. The 2nd stage will also have a minimum on time of 120 seconds. When communicating with the LC, the delay between compressors in units installed on the same shelter will be managed by the settings configured in the LC.

Dehumidification

Dehumidification Modes

Dehumidification Off

When the humidity level inside a zone falls to the Dehumidification Off setpoint, the system will stop attempting to dehumidify the space. The default setpoint value for this mode is 60% RH.

Passive Dehumidification

When the humidity level rises to the Passive Dehumidification setpoint, the controller will activate staged dehumidification at the available wall units. As the humidity level rises to the passive dehumidification setpoint, the free cooling function (economizer) is disabled. When there is a call for cooling, the compressor will energize and the blower speed will be reduced to the unit dehumidification mode or Balanced Climate speed whichever is applicable to the unit. All units allowed to run within the zone will be given the dehumidification command and will operate as such on a call for cooling. The default setpoint value for passive dehumidification is 70% RH.

Active Dehumidification

When the humidity level rises to the Active Dehumidification setpoint, the supervisory controller will active staged dehumidification at the available wall units. The supervisory controller will then calculate the dehumidification demand based on how far above the setpoint and how long the RH level has been above the setpoint. The controller will then utilize all of the units with active dehumidification capabilities to reduce the indoor humidity level. The units will be staged on based on the existing cooling rotation for the units in the zone up to the maximum number of units allowed to run. When in demand minimum compressor run time is applicable, examples of demand are as follows:

With two units with dehumidification capabilities, Unit 1 in rotation will come on at 50% demand and Unit 2 in rotation will come on at 100% demand. They will rotate off in a reverse; Unit 2 will be off at 50% demand and Unit 1 will be off at the dehumidification off setpoint.

With three units with dehumidification capabilities, Unit 1 in rotation will come on at 33% demand, Unit 2 in rotation will come on at 67% demand and Unit 3 in rotation will come on at 100% demand. They will rotate off in reverse; Unit 3 will be off at 67% demand, Unit 2 will be off at 33% demand and Unit 1 will be off at dehumidification off setpoint.

An active dehumidification sequence will run until the space temperature falls to the heating setpoint or increases to the cooling setpoint, or the dehumidification off setpoint is reached. Refer to the specific unit manual for active dehumidification sequence and space temperature control.

The passive dehumidification setpoint must be lower than the active dehumidification setpoint to ensure the economizer is disabled during active dehumidification.

Availability for active dehumidification will be determined by model number. Units with electric reheat, mechanical dehumidification or cycling reheat will be considered. The active dehumidification default setpoint is 80% RH.

Electric Reheat Dehumidification

Electric reheat dehumidification is only available as a factory-installed option that must be ordered with the unit. It cannot be installed in the field on an existing unit.

Dehumidification will only become active if the unit is connected to the LC6000 and the appropriate conditions are present.

Electric Reheat Dehumidification Operation

When the wall-mount unit receives a dehumidification call from the LC6000, the wall-mount unit will disable the economizer to force the system to use air conditioning and prevent any additional humidity from being introduced from outdoor air. The wall-mount unit will then turn on the air conditioning system which will remove moisture and cool the space. At the same time, the electric reheat coil will be energized to extend the run time of the cooling cycle and prevent cool air from being introduced to the space.

On a call for electric reheat dehumidification, the unit return air sensor will control the compressor and heating element operation based on the supervisory control setpoints. If the space temperature, based on the sensor attached to the supervisory control, reaches the cooling or heating setpoint, the dehumidification call is overridden until the cooling or heating call is satisfied. If communication is lost with the supervisory controller during a dehumidification call, the electric reheat function at the unit is lost and the unit will operate in orphan mode.

During a call for electric reheat, the wall unit will energize the compressor and the electric reheat coil will be energized to extend the run time of the cooling cycle, mitigating the cooling done by the compressor. If/when the temperature falls to 2° above heating setpoint, the compressor will be disabled until the temperature is increased 2° below the cooling setpoint and then the compressor will be re-energized (see Figure 29 on page 20). If/when the temperature reaches 4° below the cooling setpoint, the electric heating elements will be energized. The electric heating elements will be disabled 2° below the cooling setpoint. The system will continue the dehumidification process until either the heating or cooling setpoint are reached again or the requirement for dehumidification is no longer present.

FIGURE 29
Dehumidification Control (°F)

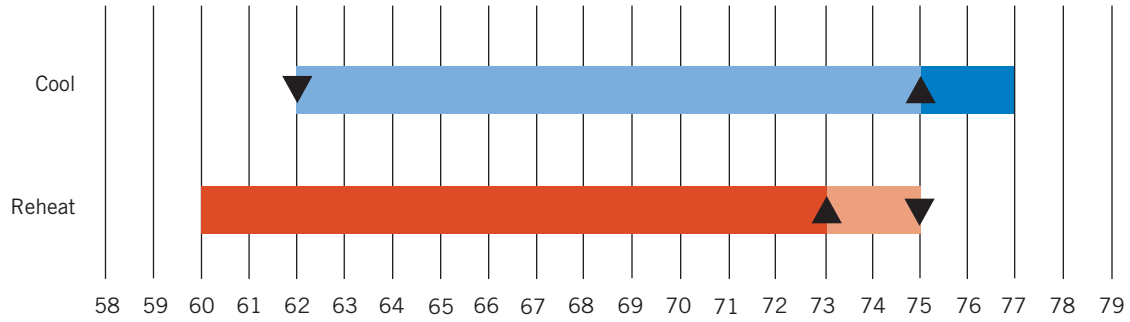

A call for electric dehumidification is ignored if there is a call for emergency vent, emergency cool or emergency off.

For a more detailed operation description, see the 2100-669 LC6000 Service Instructions manual.

Mechanical Dehumidification

Mechanical dehumidification is only available as a factory-installed option that must be ordered with the unit. It cannot be installed in the field on an existing unit.

Dehumidification will only become active if the unit is connected to the LC6000 and the appropriate conditions are present.

Mechanical Dehumidification Operation

When the wall-mount unit receives a dehumidification call from the LC6000, the wall-mount unit will disable the economizer to force the system to use air conditioning and prevent any additional humidity from being introduced from outdoor air. The wall-mount unit will then turn on the air conditioning system which will remove moisture and cool the space. At the same time, the 3-way dehumidification valve will be opened to extend the run time of the cooling cycle and prevent cool air from being introduced to the space. The dehumidification sequence will run until the space temperature reaches the heating setpoint or cooling setpoint or the humidity setpoint is reached.

On a call for mechanical dehumidification, the unit return air sensor will control the compressor and dehumidification valve operation based on the supervisory control setpoints. If the space temperature, based on the sensor attached to the supervisory control, reaches the cooling or heating setpoint, the dehumidification call is overridden until the cooling or heating call is satisfied. Free cooling (economizer) is disabled during mechanical dehumidification. If communication is lost with the supervisory controller during a dehumidification call, the dehumidification function at the unit is lost and the unit will operate in orphan mode.

During a call for mechanical dehumidification, the wall unit will energize the compressor. The dehumidification valve will be energized, circuiting the hot gas to the reheat coil, mitigating the cooling and extending the run time. If/when the temperature rises to 2° below the cooling setpoint, the dehumidification valve will be de-energized. If/when the temperature falls to 2° above heating setpoint, the compressor will be disabled until the temperature is increased 2° below the cooling setpoint and then the compressor will be re-energized (see Figure 29). If/when the temperature reaches 4° below the cooling setpoint, the dehumidification valve will be energized until the space reaches 2° above the heating setpoint. At this point, the system will continue the dehumidification process until the cooling or heating setpoint is reached or the requirement for dehumidification is satisfied.

A call for mechanical dehumidification is ignored if there is a call for emergency vent, emergency cool or emergency off.

For a more detailed operation description, see the 2100-669 LC6000 Service Instructions manual.

FIGURE 30
Wall-Mount Unit Control Board

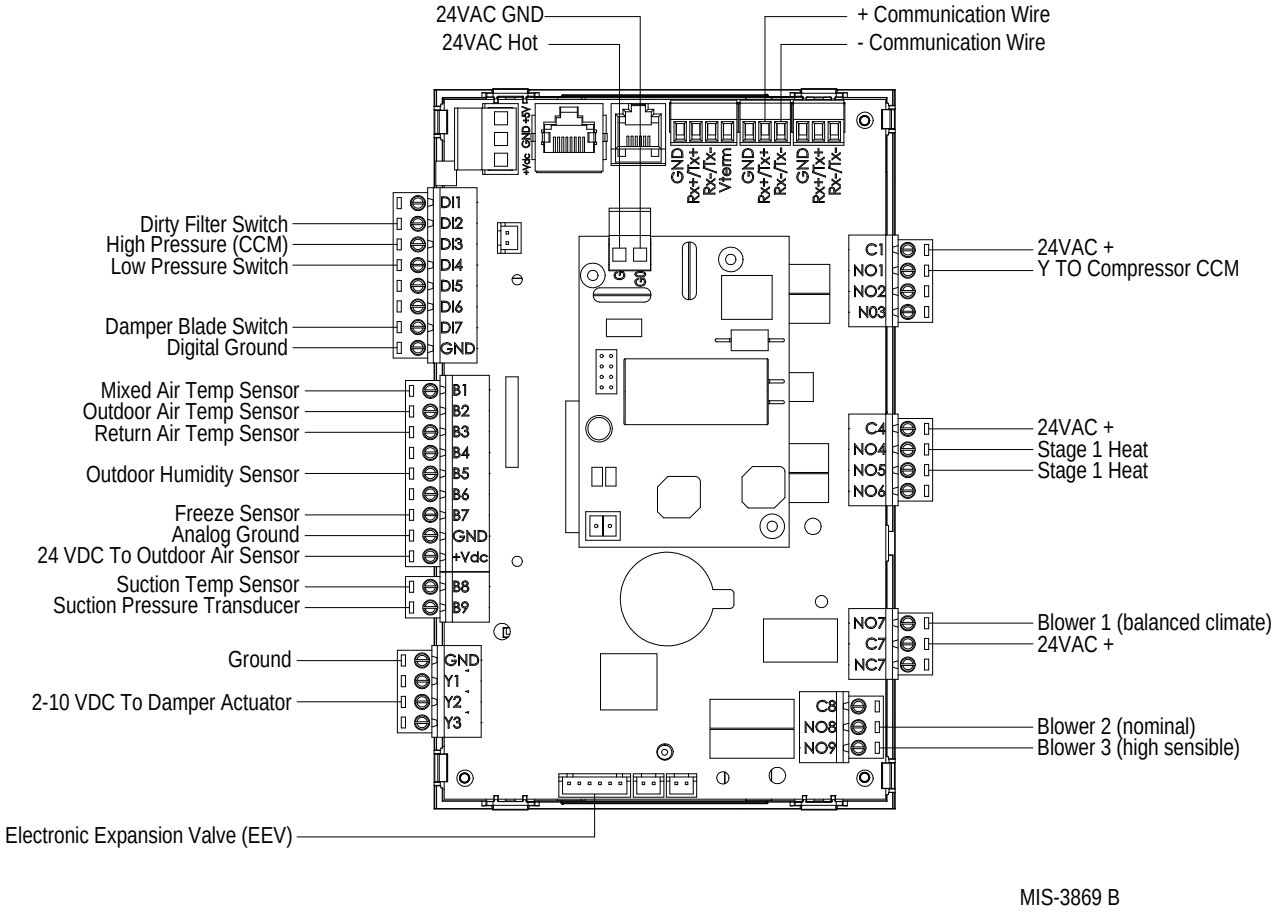

See Table 4 on page 22 for information on control board terminal functions.

TABLE 4
MULTI-TEC Wall-Mount Unit Control Board Terminals

Terminal	Function	Type	Form
Rx+/Tx+		Communication	
Rx-/Tx-		Communication	
DI1	Unit Disable	Digital	N/C
DI2	Dirty Filter Switch	Digital	N/C
DI3	High Pressure (CCM)	Digital	N/C
DI4	Low Pressure Switch	Digital	N/C
DI5	Not Used		
DI6	Damper Blade Switch	Digital	N/C
DI7	Not Used		
GND	Digital Ground		
B1	Mixed Air Temperature Sensor	Analog Input	10K Ohm Curve J
B2	Outdoor Air Temperature Sensor	Analog Input	10K Ohm Type
B3	Return Air Temperature Sensor	Analog Input	10K Ohm Curve J
B4	Not Used		
B5	Outdoor Humidity Sensor	Analog Input	
B6	Not Used		
B7	Freeze Temperature Sensor	Analog Input	10K Ohm Curve J
GND	Analog Ground		
+VDC	24VDC to Outdoor Air Sensor		
B8	Suction Temperature Sensor	Analog Input	10K Ohm Curve J
B9	Suction Pressure Sensor	Analog Input	
Y1	Not Used		
Y2	2-10VDC to Damper Actuator		
Y3	Not Used		
GND	Ground		
C1	24VAC+	Power	
NO1	Cool 1 Out	Relay Output	
NO2	Not Used		
NO3	Reheat Valve		
C4	24VAC+	Power	
NO4	Stage 1 Heating	Relay Output	
NO5	Stage 2 Heating	Relay Output	
NO6	Not Used		
NO7	Blower 1	Relay Output	
C7	24VAC+		
NC7	Not Used		
C8	Not Used		
NO8	Blower 2	Relay Output	
NO9	Blower 3	Relay Output	
GO	24VAC Ground		
G	24VAC Hot		

NOTICE

These units require R-410A refrigerant and polyol ester oil.

General

1. Use separate service equipment to avoid cross contamination of oil and refrigerants.
2. Use recovery equipment rated for R-410A refrigerant.
3. Use manifold gauges rated for R-410A (800 psi/250 psi low).
4. R-410A is a binary blend of HFC-32 and HFC-125.
5. R-410A is nearly azeotropic—similar to R-22 and R-12. Although nearly azeotropic, charge with liquid refrigerant.
6. R-410A operates at 40-70% higher pressure than R-22, and systems designed for R-22 cannot withstand this higher pressure.
7. R-410A has an ozone depletion potential of zero, but must be reclaimed due to its global warming potential.
8. R-410A compressors use polyol ester oil.
9. Polyol ester oil is hygroscopic; it will rapidly absorb moisture and strongly hold this moisture in the oil.
10. A liquid line dryer must be used—even a deep vacuum will not separate moisture from the oil.
11. Limit atmospheric exposure to 15 minutes.
12. If compressor removal is necessary, always plug compressor immediately after removal. Purge with small amount of nitrogen when inserting plugs.

Topping Off System Charge

If a leak has occurred in the system, Bard Manufacturing recommends reclaiming, evacuating (see criteria above) and charging to the nameplate charge. If done correctly, topping off the system charge can be done without problems.

With R-410A, there are no significant changes in the refrigerant composition during multiple leaks and recharges. R-410A refrigerant is close to being an azeotropic blend (it behaves like a pure compound or single component refrigerant). The remaining refrigerant charge in the system may be used after leaks have occurred. “Top-off” the charge by utilizing the pressure charts on the inner control panel cover as a guideline.

REMEMBER: *When adding R-410A refrigerant, it must come out of the charging cylinder/tank as a liquid to avoid any fractionation and to insure optimal system performance. Refer to instructions for the cylinder that is being utilized for proper method of liquid extraction.*

Safety Practices

1. Never mix R-410A with other refrigerants.
2. Use gloves and safety glasses. Polyol ester oils can be irritating to the skin, and liquid refrigerant will freeze the skin.
3. Never use air and R-410A to leak check; the mixture may become flammable.
4. Do not inhale R-410A—the vapor attacks the nervous system, creating dizziness, loss of coordination and slurred speech. Cardiac irregularities, unconsciousness and ultimately death can result from breathing this concentration.
5. Do not burn R-410A. This decomposition produces hazardous vapors. Evacuate the area if exposed.
6. Use only cylinders rated DOT4BA/4BW 400.
7. Never fill cylinders over 80% of total capacity.
8. Store cylinders in a cool area, out of direct sunlight.
9. Never heat cylinders above 125°F.
10. Never trap liquid R-410A in manifold sets, gauge lines or cylinders. R-410A expands significantly at warmer temperatures. Once a cylinder or line is full of liquid, any further rise in temperature will cause it to burst.

Important Installer Note

For improved start up performance, wash the indoor coil with a dishwashing detergent.

R410-A Refrigerant Charge

This unit was charged at the factory with the quantity of refrigerant listed on the serial plate. AHRI capacity and efficiency ratings were determined by testing with this refrigerant charge quantity.

Table 5 on page 24 shows nominal pressures for the units. Since many installation specific situations can affect the pressure readings, this information should only be used by certified technicians as a guide for evaluating proper system performance. They shall not be used to adjust charge. If charge is in doubt, reclaim, evacuate and recharge the unit to the serial plate charge.

TABLE 5
MULTI-TEC Cooling Pressures

Air Temperature Entering Outdoor Coil °F

Model	Return Air Temp (DB/WB)	Pressure	75	80	85	90	95	100	105	110	115	120	125
W42AC	75/62	Low Side	123	125	128	130	132	135	137	138	140	142	144
		High Side	323	346	371	395	421	447	474	501	528	558	587
	80/67	Low Side	132	134	137	139	141	144	146	148	150	152	154
		High Side	331	355	380	405	432	458	486	514	542	572	602
	85/72	Low Side	137	139	142	144	146	149	151	153	155	157	159
		High Side	343	367	393	419	447	474	503	532	561	592	623
W48AC	75/62	Low Side	120	122	125	127	130	132	134	136	137	139	141
		High Side	330	353	377	402	428	454	482	510	540	570	601
	80/67	Low Side	128	131	134	136	139	141	143	145	147	149	151
		High Side	338	362	387	412	439	466	494	523	554	585	616
	85/72	Low Side	132	136	139	141	144	146	148	150	152	154	156
		High Side	350	375	401	426	454	482	511	541	573	605	638
W60C	75/62	Low Side	127	129	131	134	136	137	140	142	145	148	151
		High Side	344	362	380	401	421	444	467	492	518	545	573
	80/67	Low Side	136	138	140	143	145	147	150	152	155	158	161
		High Side	353	371	390	411	432	455	479	505	531	559	588
	85/72	Low Side	141	143	145	148	150	152	155	157	160	164	167
		High Side	365	384	404	425	447	471	496	523	550	579	609
W72C	75/62	Low Side	117	119	121	122	124	126	128	130	132	134	136
		High Side	332	353	376	402	427	454	483	512	542	574	607
	80/67	Low Side	125	127	129	131	133	135	137	139	141	143	145
		High Side	340	362	386	412	438	466	495	525	556	589	623
	85/72	Low Side	129	131	134	136	138	140	142	144	146	148	150
		High Side	352	375	400	426	453	482	512	543	575	610	645

Low side pressure ± 4 PSIG
High side pressure ± 10 PSIG

Tables are based upon rated CFM (airflow) across the evaporator coil. If there is any doubt as to correct operating charge being in the system, the charge should be removed and system evacuated and recharged to serial plate charge weight.

NOTE: *Pressure table based on high speed condenser fan operation. If condensing pressures appear elevated check condenser fan wiring. See* **Condenser Fan Operation** *on page 25.*

⚠ WARNING

Electrical shock hazard.

Disconnect VAC power supply before servicing.

Failure to do so could result in electric shock or death.

High Pressure Switch

All W**ACP* wall-mount air conditioner series models are supplied with a high pressure switch. The high pressure switch opens at 650 psi.

Three Phase Scroll Compressor Start Up Information

Scroll compressors, like several other types of compressors, will only compress in one rotational direction. Direction of rotation is not an issue with single phase compressors since they will always start and run in the proper direction.

However, three phase compressors will rotate in either direction depending upon phasing of the power. Since there is a 50-50 chance of connecting power in such a way as to cause rotation in the reverse direction, verification of proper rotation must be made. Verification of proper rotation direction is made by observing that suction pressure drops and discharge pressure rises when the compressor is energized. Reverse rotation also results in an elevated sound level over that with correct rotation, as well as substantially reduced current draw compared to tabulated values.

Verification of ***proper rotation*** must be made at the time the equipment is put into service. If improper rotation is corrected at this time, there will be no negative impact on the durability of the compressor. However, reverse operation for over 1 hour may have a negative impact on the bearing due to oil pump out.

NOTE: *If compressor is allowed to run in reverse rotation for an extended period of time, the compressor's internal protector will trip.*

All three phase compressors are wired identically internally. As a result, once the correct phasing is determined for a specific system or installation, connecting properly phased power leads to the same Fusite terminal should maintain proper rotation direction.

The direction of rotation of the compressor may be changed by reversing any two line connections to the unit.

Phase Monitor

Used only on 3-phase equipment, the phase monitor is a compressor protection device that will prohibit operation of the compressor if the device senses a possible reverse-rotation situation due to incorrect phasing. On a call for compressor (and only compressor), the device will check incoming phase, check for severe voltage imbalance and check for proper frequency. Under nominal conditions, a green LED light will show on the face of the monitor. If there is improper phasing, voltage imbalance or frequency deviation, the device will show a red LED light and prohibit compressor operation.

If a fault condition occurs, reverse two of the supply leads to the unit. ***Do not reverse any of the unit factory wires as damage may occur.***

Condenser Fan Operation

NOTE: *On models equipped with a low ambient control (LAC), the condenser fan motor will have a delayed start until system refrigerant operating pressure builds up. After starting, the fan motor may or may not cycle depending upon ambient conditions. This is normal operation.*

The condenser fan motor on 230/208 volt, one and three phase, 60 HZ units is a two-speed motor that comes factory wired on high speed for peak performance. If ambient conditions permit, it can be reconnected to low speed (red wire) for lower sound level. See unit wiring diagram. (*This applies to W42, W48, W60 and W72 models only.*)

Low Ambient Control

Modulating head-pressure control that allows full speed at pressures above 315 psi. Below 315 psi, the control will slow fan speed—following internal head pressures—until a minimum RPM is reached (approx 300 RPM). Below this point, the control will shut the fan completely off until internal pressures rise. The control is preset from the factory, but should adjustment become necessary, there is an adjustment screw located on the bottom of the control behind a weatherproof cap. One full turn clockwise equals approximately +48 psi.

Compressor Control Module

The compressor control module (CCM) is standard on all models covered by this manual.

Delay-on-Make Timer

A delay-on-make timer is included to be able to delay startup of the compressor. This is desired when more than one unit is on a structure so that all of the units do not start at the same time which could happen after a power loss or building shutdown. The delay-on-make

time period is 2 minutes plus 10% of the delay-on-break time period. To ensure that all of the units do not start at the same time, adjust the delay-on-break timer on each unit to a slightly different delay time.

Short Cycle Protection/Delay-on-Break

An anti-short cycle timer is included to prevent short cycling the compressor. This is adjustable from 30 seconds to 5 minutes via the adjustment knob (see Figure 31). Once a compressor call is lost, the time period must expire before a new call will be initiated.

10% of this time is also considered on the delay-on-make timer (see **Delay-on-Make Timer**).

High Pressure Detection

High pressure switch monitoring allows for a lockout condition in a situation where the switch is open. If the high pressure switch opens, the CCM will de-energize the compressor. If the switch closes, it will then restart the compressor after the delay-on-break setting has expired on the device. If the switch trips again during the same thermostat call, the compressor will be de-energized and the alarm terminal will be energized indicating an alarm. The red LED will light and stay on until power is cycled to the control or a loss of voltage is present at Y terminal for more than ½ second.

Test Mode

By rapidly rotating the potentiometer (POT) clockwise (see Figure 31), all timing functions will be removed for testing.

The conditions needed for the unit to enter test mode are as follows: POT must start at a time less than or equal to the 40 second mark. The POT must then be rapidly rotated to a position greater than or equal to the 280 second mark in less than ¼ second. Normal operation will resume after power is reset or after the unit has been in test mode for at least 5 minutes.

Brownout Protection with Adjustment

Brownout protection may be necessary if the utility power or generator power has inadequate power to prevent the voltage from dropping when the compressor starts. This is rare but can happen if the generator is undersized at the site or if the site is in a remote location far from the main power grid. Under normal circumstances, allowing the brownout to be ignored for a time period should not be needed. The 8201-169 is

FIGURE 31
8201-169 Compressor Control Module

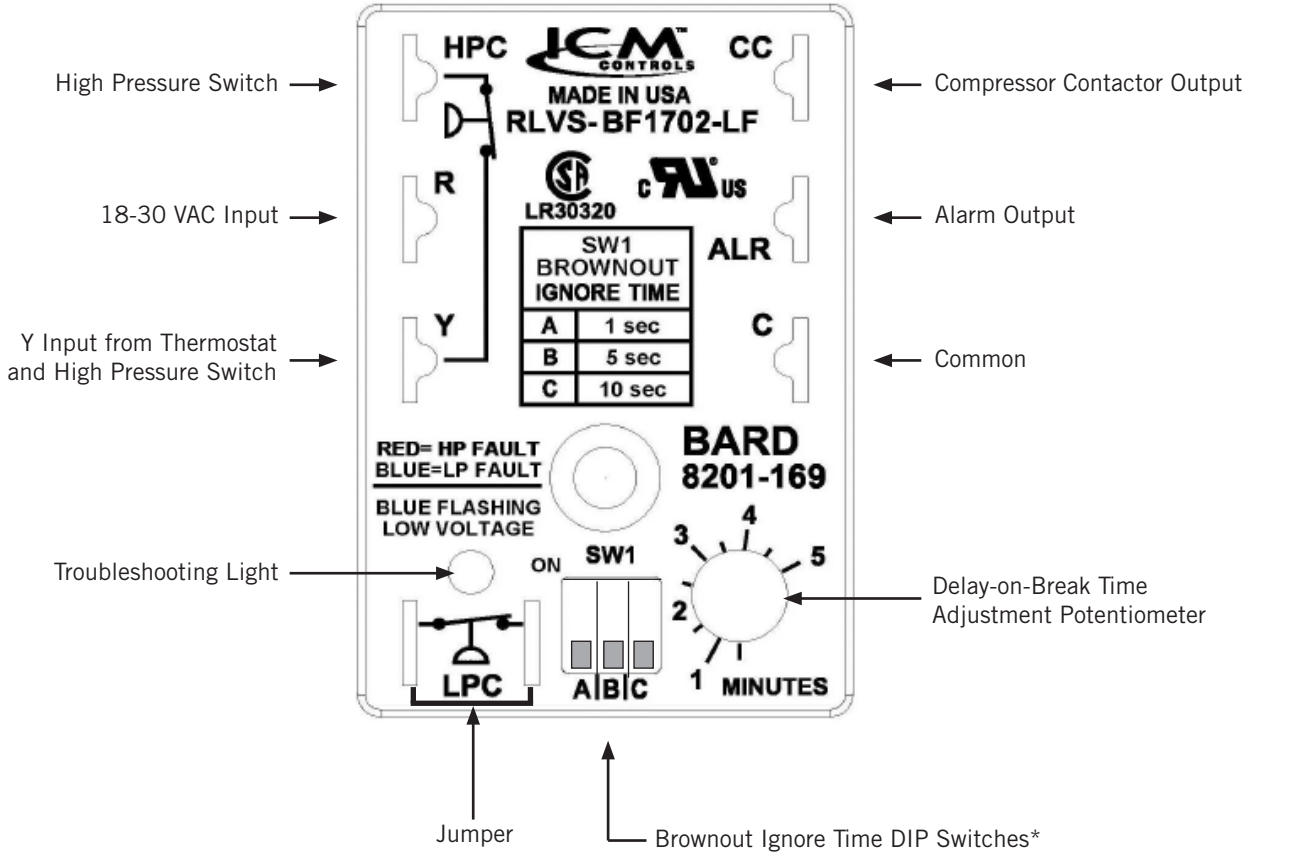

* Turn on only one switch for that specific ignore time setting. 10 seconds is the maximum brownout ignore time. If all switches are "off", the control is in "do not ignore".

shipped with all the DIP switches in the 'off' or 'do not ignore' position (see Figure 31).

If ignoring the brownout is needed because of the above conditions, three preset timers can be set by DIP switches in order to delay signaling a power brownout for a specific length of time after compressor contactor is energized. This allows the compressor a time period to start even if the voltage has dropped and allows the voltage to recover. This delay only happens when the CC terminal energizes. The delay can be set to 1 second (A DIP switch), 5 seconds (B DIP switch) or 10 seconds (C DIP switch); time is not cumulative—only the longest setting will apply. If the voltage recovers during the brownout delay period, the compressor will start.

If a brownout condition is detected by the 8201-169, the troubleshooting light will flash blue. The light will continue to flash until the cooling call is satisfied or power is removed from the Y terminal. This condition does not prevent operation, it only indicates that a brownout condition was present at some point during the cooling call. If a brownout condition is detected, CC will be de-energized and will retry after the delay-on-make timer is satisfied; this process will continue until call is satisfied.

If user chooses the "do not ignore" position (all three DIP switches "off") when the site has inadequate utility or generator power, this could lead to the compressor never starting. The control will see the brownout immediately and not start.

A common scenario and one that has been seen in the field is when a unit or units switches from utility power to generator power. With slower transfer switches, the time delay between the utility power and generator power didn't cause a problem. The units lost power, shut off and came back on line normally. With the introduction of almost instantaneous transfer switches, the millisecond long power glitch can be enough that the compressor will start to run backwards. In this scenario, the CCM will catch this and restart the units normally.

Pressure Service Ports

High and low pressure service ports are installed on all units so that the system operating pressures can be observed. A pressure table covering all models can be found on page 24. It is imperative to match the correct pressure table to the unit by model number.

This unit employs high-flow Coremax valves instead of the typical Schrader type valves.

WARNING! Do NOT use a Schrader valve core removal tool with these valves. Use of such a tool could result in eye injuries or refrigerant burns!

To change a Coremax valve without first removing the refrigerant, a special tool is required which can be obtained at www.fastestinc.com/en/SCCA07H. See the replacement parts manual for replacement core part numbers.

Outdoor Fan Motor

Due to design considerations of the condenser section of the wall-mount unit, placement/clearance of the motor/fan blade is critical to heat dispersal. Should a change of motor or fan blade be necessary, please view Figure 32 for proper clearance adjustment.

FIGURE 32
Fan Blade Setting

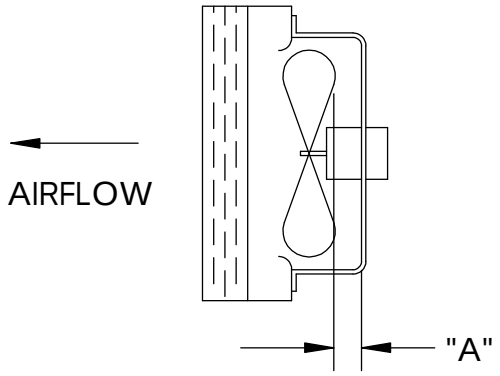

MIS-1724

Model	Dimension A
W42AC W48AC W60AC W72AC	1.75"

TABLE 6
MULTI-TEC W42-72AC* Optional Accessories

		W42AC*A	W42AC*B	W42AC*C	W48AC*A	W48AC*B	W48AC*C	W60AC*A	W60AC*B	W60AC*C	W72AC*A	W72AC*B	W72AC*C
Heater Kits	EHW4TA-A05	X			X								
	EHWA05-A10B	X			X			X					
	EHWA05-A15B	X			X			X					
	EHWA05-A20B	X			X			X					
	EHW4TA-B06		X			X			X				
	EHWA05-B09B		X			X							
	EHW6TA-B06											X	
	EHWA05-B15B		X			X			X			X	
	EHW5TA-B18								X				
	EHW4TA-B18		X			X							
	EHW4TA-C09			X			X			X			X
	EHW4TA-C15			X			X			X			X
	EHW5TA-A05							X			X		
	EHW60A-B09B								X				
	EHW70A-B09B											X	
	EHW6TA-B18											X	
	EHW72A-A10B										X		
	EHW72A-A15B										X		
	EHW72A-A20B										X		
Circuit Breaker (WMCB) and Toggle Disconnect (WMPD)	WMCB-05B		X			X							
	WMCB-06B								X				
	WMCB-08A	X			X								
	WMCB-09A							X			X		
	WMPD-01C			X			X			X			X
	WMCB-08B											X	

Standard Maintenance Procedures

⚠ WARNING

Electrical shock hazard.

Disconnect all power supplies before servicing.

Failure to do so could result in electric shock or death.

⚠ CAUTION

Cut hazard.

Wear gloves to avoid contact with sharp edges.

Failure to do so could result in personal injury.

1. Disable system from LC6000 controller (see latest version of 2100-669 LC6000 Service Instructions manual).
2. Turn off AC breakers at wall-mount units.
3. Check inlet sides of condenser and evaporator coils for obstructions/debris—clean if necessary using a quality manufactured coil cleaning product specific for the evaporator or condenser coil.
   - Condenser coil: Remove the fan shroud/motor/motor bracket as an assembly from the condenser section. This will give clear access to the inlet side of the coil for cleaning. Follow the coil cleaner manufacturer's directions for necessary safety gear and precautions, as well as for application and use. More than one application may be necessary. Rinse thoroughly.
   - Evaporator coil: Remove the evaporator section panel and apply specific evaporator cleaner directly to the inlet side of coil, being very careful not to overspray into insulation or surrounding panels and wiring. Residual cleaner and dissolved debris should drip into the drain pan and leave the unit through the condensate hose. More than one application may be necessary. Rinse thoroughly.
4. Manually spin fan and blower motors to ensure they turn freely. All motors are permanently lubricated, so no oil is necessary.
5. Inspect free cooling damper actuator and linkage.
6. Install new air filter; check for additional filter grilles internal to the structure.
7. Inspect the control panel of the system.
   - Look for insect or rodent activity and remove any nesting materials.
   - Manually push contactor closed, observe for movement—contactor points should have minimal discoloration, no spalling or other signs of arcing. Replace if doubtful.
   - Check field and factory wiring for tightness and look for signs of overheating (discoloration of terminals or wire insulation).
8. Ensure that supply and return registers are not obstructed, and more importantly, are not recycling the air to one another. Adjust supply louvers if necessary to direct discharge air away from any direct route to the return grille.
9. Re-assemble wall-mount unit, turn breakers back on.
10. Enable system to LC6000 controller (see latest version of 2100-669 LC6000 Service Instructions manual).
11. Repeat steps for additional wall-mount units.

Removal of Fan Shroud

1. Disconnect all power to the unit.
2. Remove the screws holding both grilles, one on each side of unit, and remove grilles.
3. Remove nine screws holding fan shroud to condenser and bottom.
4. Unwire condenser fan motor.
5. Slide complete motor, fan blade and shroud assembly out the left side of the unit.
6. Service motor/fan as needed. Any service work requiring removal or adjustment in the fan and/or motor will require that the dimensions be checked and blade adjusted in or out on the motor shaft accordingly (see page 27 for proper clearance adjustment).
7. Reverse steps to re-install.

Filters

The filters can be serviced from the outside by removing the front control panel cover (see Figure 33). Two (2) 20" x 20" x 1" throwaway filters come standard with each unit. Additional 1" and 2" filter options are available as optional accessories.

FIGURE 33
Front Control Panel Cover

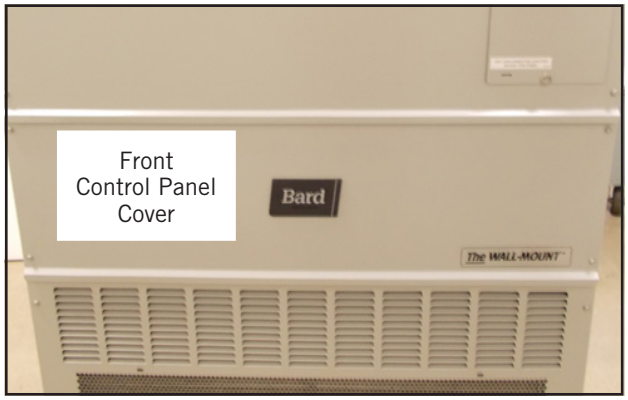

Filter Removal/Installation

1. Remove left filter first by pulling on filter removal slide (see Figure 34).

FIGURE 34
Removing Left Filter

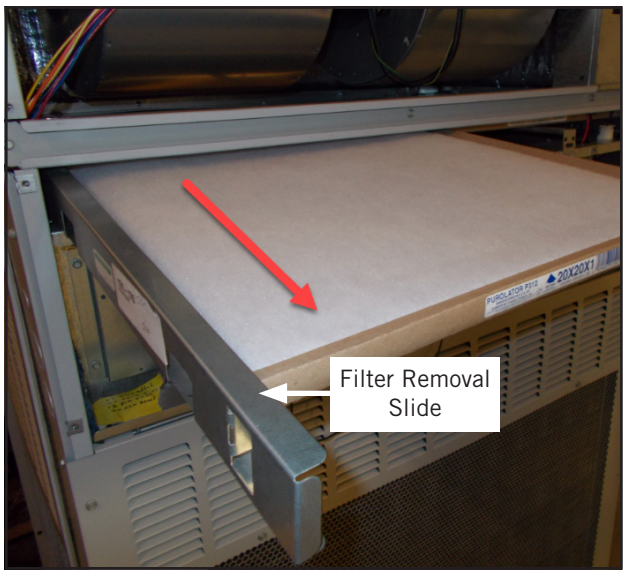

2. Slide second filter to the left around the wires and pull the filter out (see Figure 35).

FIGURE 35
Removing Second Filter

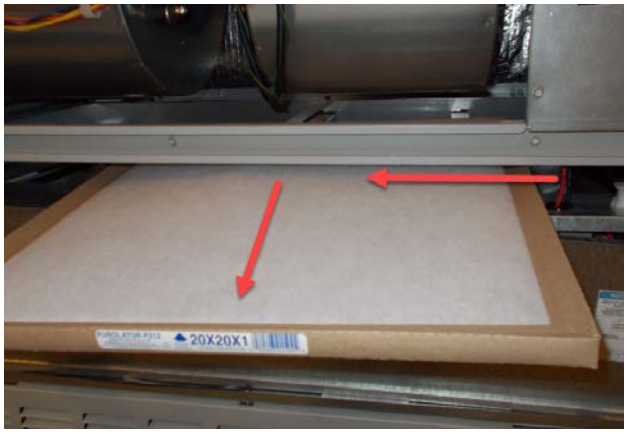

3. Reverse the order for new filter installation.

NOTE: *When installing new filters, make sure that airflow arrows on filters point up.*

Switching Filter Sizes

1. To switch from 1" to 2" filters, start by removing the filter slide and bend the tabs down out of the way (see Figures 36 and 37).

FIGURE 36
Filter Tabs in Up Position

FIGURE 37
Bend Filter Tabs Down

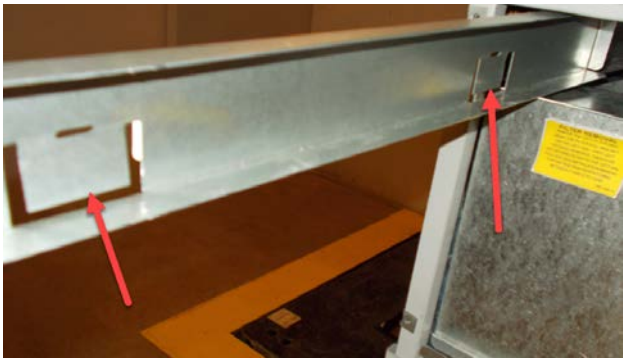

2. Locate the filter support brackets and remove the four (4) screws holding them to the top of the control panel (see Figure 38).

FIGURE 38
Remove Four Screws

3. Pull the brackets out towards the front of the unit. The back of the bracket will slip out of the upper slots at the back of the filter tray.
4. Re-install the filter support brackets into the lower slots at the back of the filter tray (see Figure 39).

FIGURE 39
Re-Install Filter Support Brackets into Lower Slots

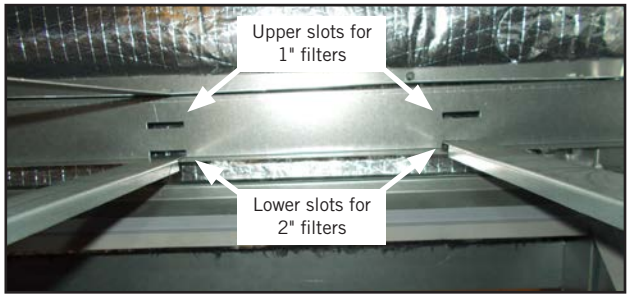

5. Re-install the four (4) screws into the upper screw holes on the filter support brackets. Then bend the tab up out of the way (see Figure 40).

FIGURE 40
Re-Install Screws and Bend Tabs Up

6. Install the right 2" filter first followed by the left filter (see Figures 41 and 42).

NOTE: *When installing new filters, make sure that airflow arrows on filters point up.*

7. Reverse the steps above to switch from 2" to 1" filters.

FIGURE 41
Install Right 2" Filter

FIGURE 42
Install Left 2" Filter

Dirty Filter Switch

1. Disconnect all power to the unit. Remove control panel outer cover and upper front panel.
2. The dirty filter switch is located on top of the filter partition between the blower wheels (see Figure 43). The dirty filter indicator light and reset switch is located on the right side of the filter access opening above the control panel. Remove the cover on the dirty filter switch and ensure the knob is set at 0.4" W.C. (see Figure 44). This is only a recommended starting point prior to making switch adjustments. Switch setting is highly dependent on filter type used, blower speed, unit ducting and other unit installation characteristics. See **Dirty Filter Switch Adjustment** for instructions on how to make proper switch adjustments.
3. Re-install upper front panel.

Dirty Filter Switch Adjustment

1. Apply power to the unit.
2. Turn the unit indoor blower on (energize R-G on low voltage terminal board).

FIGURE 43
Dirty Filter Switch and Dirty Filter Indicator Light/Reset Switch

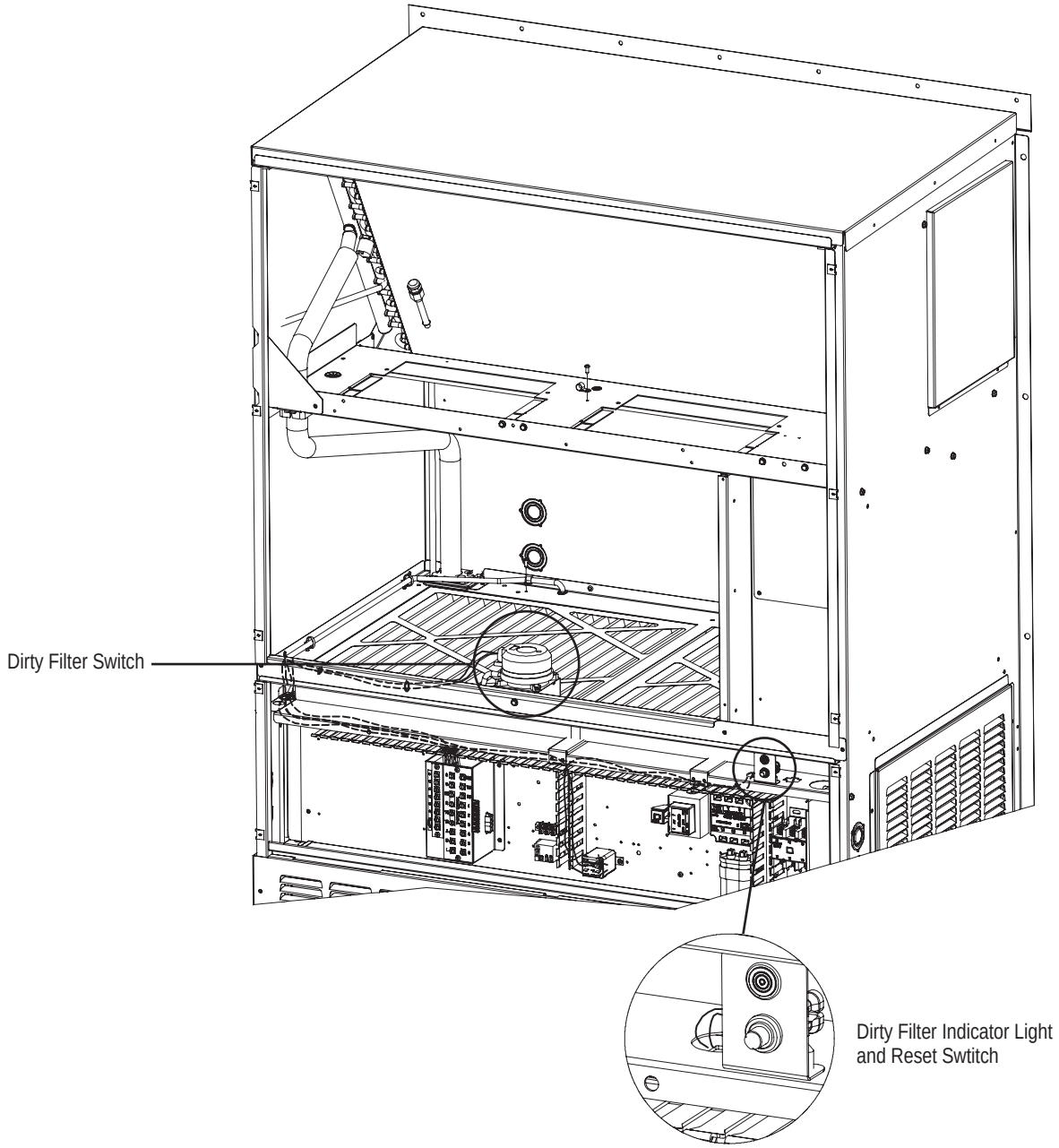

3. With air filters installed and switch initially set at 0.4" W.C. (see Step 2 under **Dirty Filter Switch**), begin restricting the air filter of the unit using a piece of cardboard under the filters until the switch trips and the light comes on. If the filter is restricted by 75% (or desired restriction amount), skip to Step 6.
4. If switch setting adjustment is required, disconnect power to the unit. Remove the upper front panel and the cover on the airflow switch so that adjustment can be made. If the switch tripped before 75% restriction was reached, turn the knob slightly clockwise. If the switch tripped after 75%, turn the knob counter-clockwise (see Figure 44).
5. Replace the upper front panel and repeat Steps 1-3. Continue to make adjustments described in Step 4 until the desired restriction is obtained.
6. Remove the restriction and reset the filter switch. Replace the switch cover once adjustment is complete.
7. Install the outer control panel cover. This completes the adjustment.

FIGURE 44
Adjusting Dirty Filter Switch

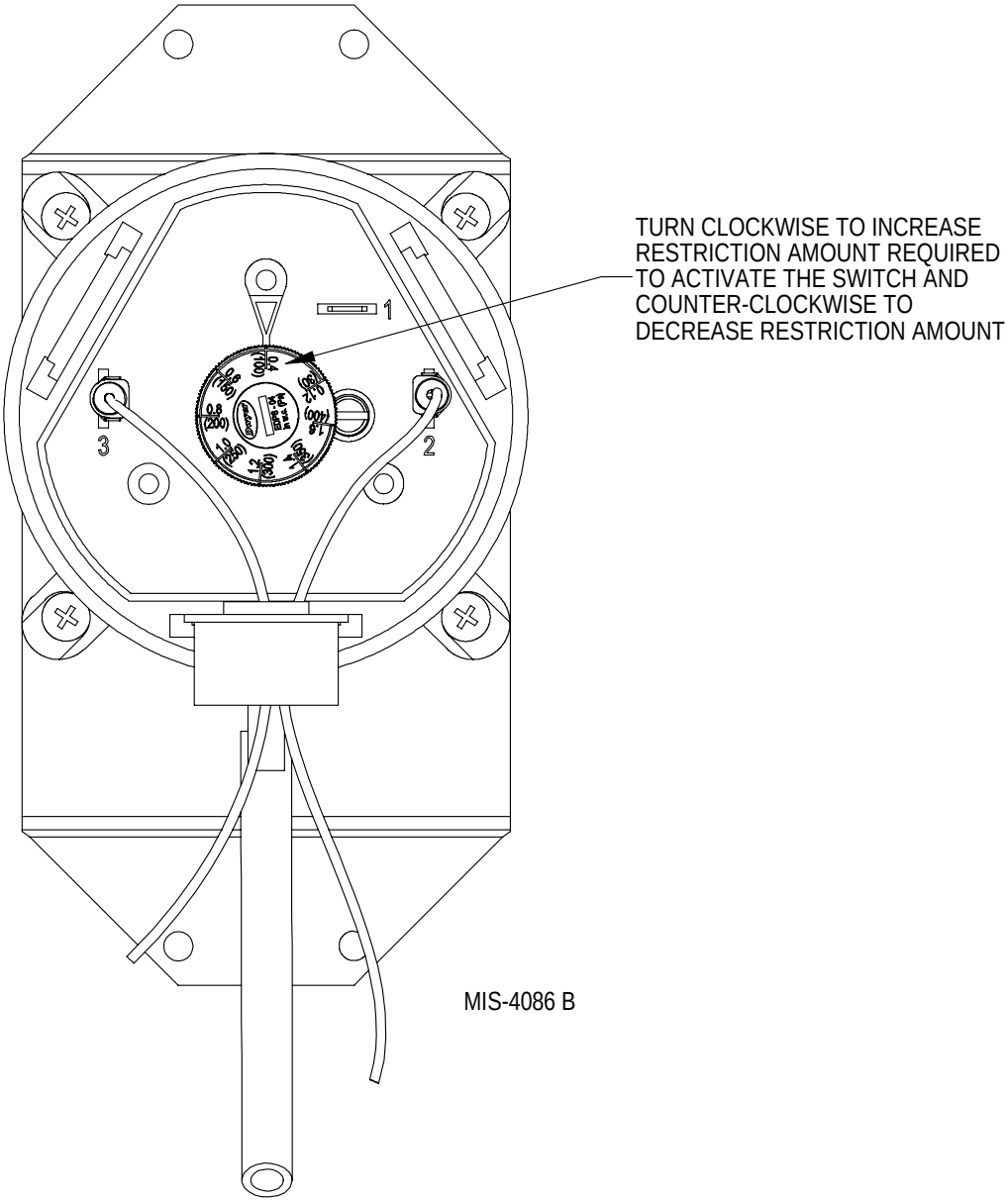

Troubleshooting Nidec SelecTech Series ECM Motors

If the Motor Is Running

1. It is normal for the motor to rock back and forth on start up. Do not replace the motor if this is the only problem identified.
2. If the system is excessively noisy, does not appear to change speeds in response to a demand (Heat, Cool, Other) or is having symptoms during the cycle such as tripping limit or freezing coil, check the following:
   A. Wait for programmed delays to time out.
   B. Ensure that the motors control inputs are wired as shown in the factory-supplied wiring diagram to ensure motor is getting proper control signals and sequencing.
   C. Remove the filter and check that all dampers, registers and grilles are open and free flowing. If removing the filters corrects the problem, clean or replace with a less restrictive filter. Also check and clean the blower wheel or coil as necessary.
   D. Check the external static pressure (total of both supply and return) to ensure it is within the range as listed on the unit serial plate. If higher than allowed, additional duct work is needed.
   E. If the motor does not shut off at the end of the cycle, wait for any programmed delays to time out (no more than 90 seconds). Also make sure that there is no call for "Continuous Fan" on the "G" terminal.
   F. If the above diagnostics do not solve the problem, confirm the voltage checks in the next section below, then continue with the **Model SelecTech Communication Diagnostics**.

If the Motor Is Not Running

1. Check for proper high voltage and ground at the L/L1, G and N/L2 connections at the motor (see Figure 45). Correct any voltage issues before proceeding to the next step. The SelecTech motor is voltage specific. Only the correct voltage should be applied to the proper motor. Input voltage within plus or minus 10% of the nominal line power VAC is acceptable.

FIGURE 45
Motor Connections

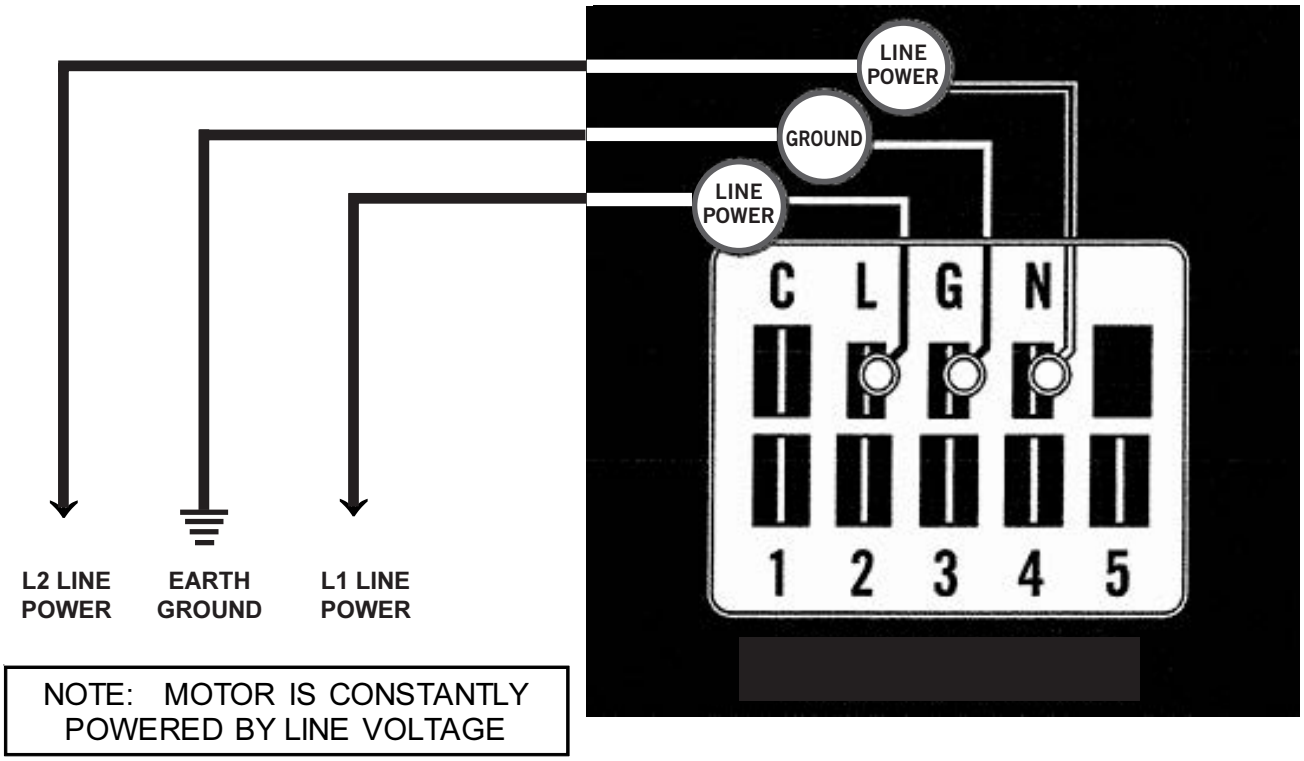

2. If the motor has proper high voltage and ground at the L/L1, G and N/L2 connections, continue with the **Model SelecTech Communication Diagnostics**.

Model SelecTech Communication Diagnostics

The SelecTech motor is communicated through 24 VAC low voltage (thermostat control circuit wiring).

1. Start with unit wiring diagram to confirm proper connections and voltage (see Figure 46).
2. Initiate a demand from the thermostat and check the voltage between the common and the appropriate motor terminal (1-5). ("G" input is typically on terminal #1, but always refer to wiring diagram.)

A. If the low voltage communication is not present, check the demand from the thermostat. Also check the output terminal and wire(s) from the terminal strip or control relay(s) to the motor.

B. If the motor has proper high voltage as identified on page 34 (Step 1 in **If the Motor Is Not Running**), proper low voltage to a programmed terminal and is not operating, the motor is failed and will require replacement.

FIGURE 46
Motor Connections

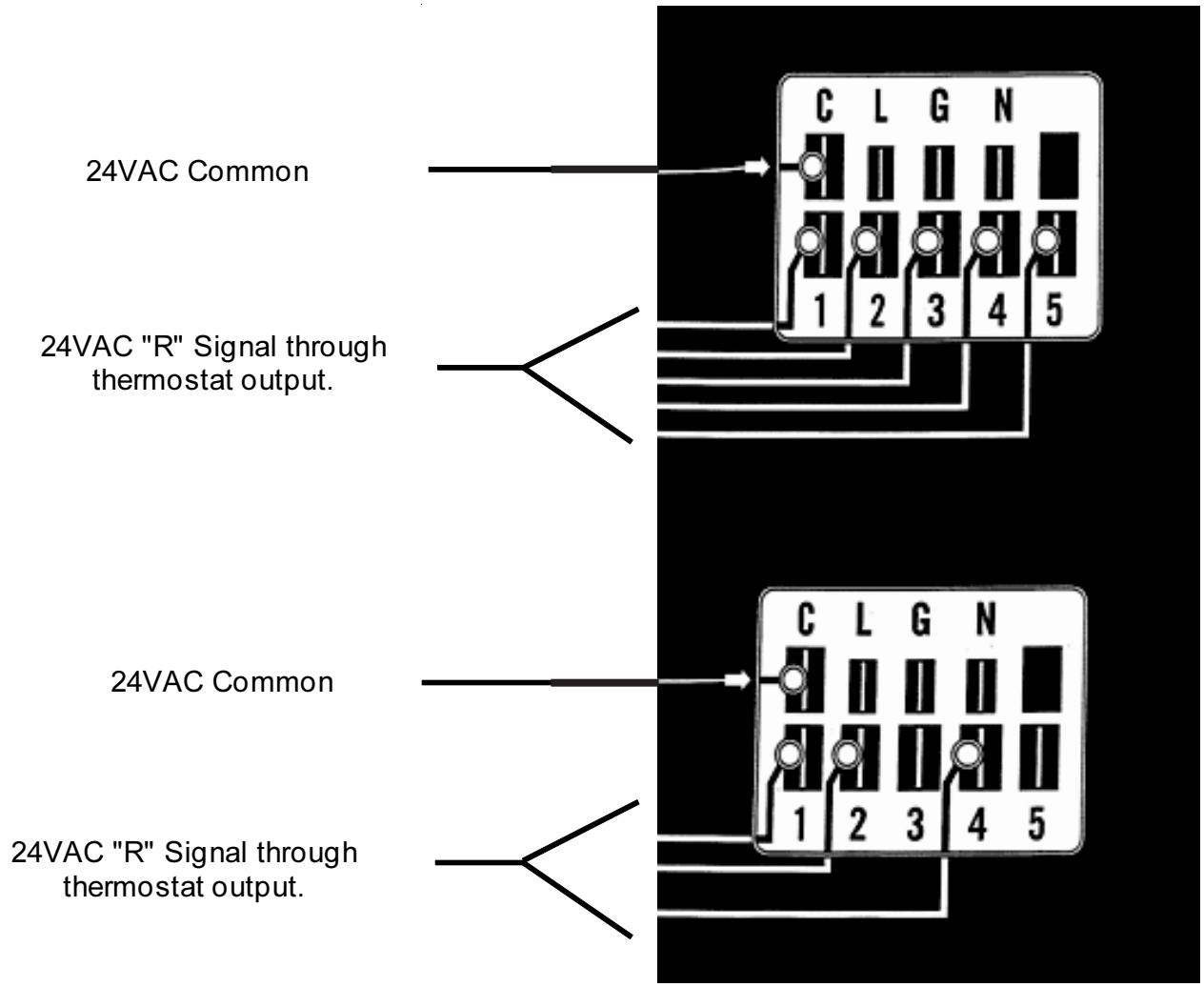

8301-057 Airflow Differential/Dirty Filter Switch

FIGURE 47
8301-057 Air Differential Switch Terminals

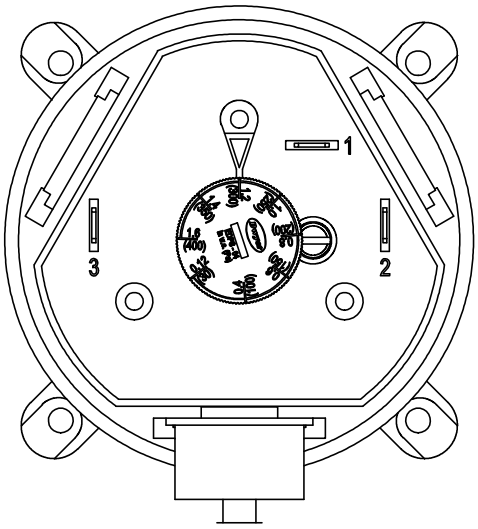

Terminals

1 – Normally Closed
2 – Normally Open
3 – Common

NOTE: *Contact position is in resting state.*

8301-067 Outdoor Temperature/Humidity Sensor

FIGURE 48
8301-067 Sensor Dip Switches

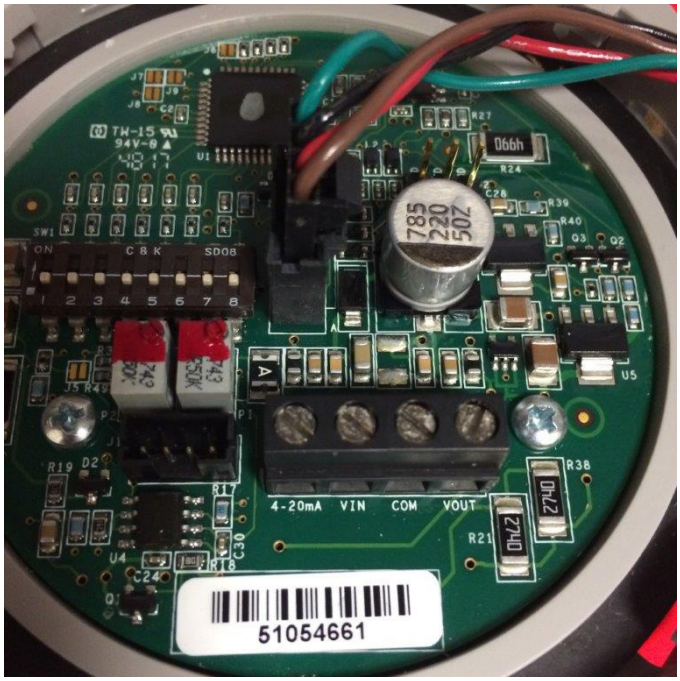

8301-067 sensor Temperature/Resistance and Humidity/Voltage tables on pages 37 and 38.

TABLE 7
8301-067 Sensor: Temperature/Resistance

Temperature		Resistance	Temperature		Resistance	Temperature		Resistance	Temperature		Resistance
F	C	Ω	F	C	Ω	F	C	Ω	F	C	Ω
-25	-31.7	148,452.94	13	-10.6	48,892.46	51	10.6	18,337.51	89	31.7	7679.76
-24	-31.1	143,910.37	14	-10.0	47,571.97	52	11.1	17,898.38	90	32.2	7515.86
-23	-30.6	139,521.46	15	-9.4	46,291.29	53	11.7	17,471.09	91	32.8	7355.94
-22	-30.0	135,280.55	16	-8.9	45,049.09	54	12.2	17,055.30	92	33.3	7199.88
-21	-29.4	131,182.22	17	-8.3	43,844.12	55	12.8	16,650.65	93	33.9	7047.59
-20	-28.9	127,221.25	18	-7.8	42,675.14	56	13.3	16,256.82	94	34.4	6898.95
-19	-28.3	123,392.63	19	-7.2	41,540.99	57	13.9	15,873.48	95	35.0	6753.88
-18	-27.8	119,691.54	20	-6.7	40,440.51	58	14.4	15,500.34	96	35.6	6612.28
-17	-27.2	116,113.37	21	-6.1	39,372.62	59	15.0	15,137.09	97	36.1	6474.05
-16	-26.7	112,653.66	22	-5.6	38,336.26	60	15.6	14,783.44	98	36.7	6339.11
-15	-26.1	109,308.15	23	-5.0	37,330.40	61	16.1	14,439.11	99	37.2	6207.37
-14	-25.6	106,072.72	24	-4.4	36,354.06	62	16.7	14,103.83	100	37.8	6078.74
-13	-25.0	102,943.44	25	-3.9	35,406.29	63	17.2	13,777.34	101	38.3	5953.15
-12	-24.4	99,916.50	26	-3.3	34,486.17	64	17.8	13,459.38	102	38.9	5830.51
-11	-23.9	96,988.26	27	-2.8	33,592.81	65	18.3	13,149.70	103	39.4	5710.75
-10	-23.3	94,155.21	28	-2.2	32,725.36	66	18.9	12,848.07	104	40.0	5593.78
-9	-22.8	91,413.97	29	-1.7	31,883.00	67	19.4	12,554.26	105	40.6	5479.55
-8	-22.2	88,761.30	30	-1.1	31,064.92	68	20.0	12,268.04	106	41.1	5367.98
-7	-21.7	86,194.07	31	-0.6	30,270.36	69	20.6	11,989.19	107	41.7	5258.99
-6	-21.1	83,709.29	32	0.0	29,498.58	70	21.1	11,717.51	108	42.2	5152.53
-5	-20.6	81,304.06	33	0.6	28,748.85	71	21.7	11,452.79	109	42.8	5048.52
-4	-20.0	78,975.60	34	1.1	28,020.48	72	22.2	11,194.83	110	43.3	4946.91
-3	-19.4	76,721.24	35	1.7	27,312.81	73	22.8	10,943.45	111	43.9	4847.63
-2	-18.9	74,538.41	36	2.2	26,625.18	74	23.3	10698.45	112	44.4	4750.62
-1	-18.3	72,424.61	37	2.8	25,956.98	75	23.9	10,459.65	113	45.0	4655.83
0	-17.8	70,377.48	38	3.3	25,307.60	76	24.4	10,226.90	114	45.6	4563.20
1	-17.2	68,394.70	39	3.9	24,676.45	77	25.0	10,000.00	115	46.1	4472.67
2	-16.7	66,474.07	40	4.4	24,062.97	78	25.6	9778.81	116	46.7	4384.19
3	-16.1	64,613.46	41	5.0	23,466.62	79	26.1	9563.15	117	47.2	4297.71
4	-15.6	62,810.82	42	5.6	22,886.87	80	26.7	9352.89	118	47.8	4213.18
5	-15.0	61,064.17	43	6.1	22,323.22	81	27.2	9147.86	119	48.3	4130.55
6	-14.4	59,371.62	44	6.7	21,775.16	82	27.8	8947.93	120	48.9	4049.77
7	-13.9	57,731.32	45	7.2	21,242.23	83	28.3	8752.95	121	49.4	3970.79
8	-13.3	56,141.52	46	7.8	20,723.96	84	28.9	8562.79	122	50.0	3893.58
9	-12.8	54,600.50	47	8.3	20,219.91	85	29.4	8377.31	123	50.6	3818.08
10	-12.2	53,106.64	48	8.9	19,729.65	86	30.0	8196.39	124	51.1	3744.26
11	-11.7	51,658.35	49	9.4	19,252.76	87	30.6	8019.91	125	51.7	3672.07
12	-11.1	50,254.11	50	10.0	18,788.84	88	31.1	7847.74			

TABLE 8
8301-067 Sensor: Humidity/Voltage

RH%	mA Output	RH%	mA Output	RH%	mA Output
0	4.000 mA	34	9.440 mA	68	14.880 mA
1	4.160 mA	35	9.600 mA	69	15.040 mA
2	4.320 mA	36	9.760 mA	70	15.200 mA
3	4.480 mA	37	9.920 mA	71	15.360 mA
4	4.640 mA	38	10.080 mA	72	15.520 mA
5	4.800 mA	39	10.240 mA	73	15.680 mA
6	4.960 mA	40	10.400 mA	74	15.840 mA
7	5.120 mA	41	10.560 mA	75	16.000 mA
8	5.280 mA	42	10.720 mA	76	16.160 mA
9	5.440 mA	43	10.880 mA	77	16.320 mA
10	5.600 mA	44	11.040 mA	78	16.480 mA
11	5.760 mA	45	11.200 mA	79	16.640 mA
12	5.920 mA	46	11.360 mA	80	16.800 mA
13	6.080 mA	47	11.520 mA	81	16.960 mA
14	6.240 mA	48	11.680 mA	82	17.120 mA
15	6.400 mA	49	11.840 mA	83	17.280 mA
16	6.560 mA	50	12.000 mA	84	17.440 mA
17	6.720 mA	51	12.160 mA	85	17.600 mA
18	6.880 mA	52	12.320 mA	86	17.760 mA
19	7.040 mA	53	12.480 mA	87	17.920 mA
20	7.200 mA	54	12.640 mA	88	18.080 mA
21	7.360 mA	55	12.800 mA	89	18.240 mA
22	7.520 mA	56	12.960 mA	90	18.400 mA
23	7.680 mA	57	13.120 mA	91	18.560 mA
24	7.840 mA	58	13.280 mA	92	18.720 mA
25	8.000 mA	59	13.440 mA	93	18.880 mA
26	8.160 mA	60	13.600 mA	94	19.040 mA
27	8.320 mA	61	13.760 mA	95	19.200 mA
28	8.480 mA	62	13.920 mA	96	19.360 mA
29	8.640 mA	63	14.080 mA	97	19.520 mA
30	8.800 mA	64	14.240 mA	98	19.680 mA
31	8.960 mA	65	14.400 mA	99	19.840 mA
32	9.120 mA	66	14.560 mA	100	20.000 mA
33	9.280 mA	67	14.720 mA		

8408-044 Return Air Sensor/Suction Sensor

TABLE 9
8408-044 Sensor: Temperature/Resistance Curve J

Temperature °F	Resistance Ω	Temperature °F	Resistance Ω	Temperature °F	Resistance Ω	Temperature °F	Resistance Ω
-25.0	196871	13.0	56985	53.0	19374	89.0	7507
-24.0	190099	14.0	55284	52.0	18867	90.0	7334
-23.0	183585	15.0	53640	53.0	18375	91.0	7165
-22.0	177318	16.0	52051	54.0	17989	92.0	7000
-21.0	171289	17.0	50514	55.0	17434	93.0	6840
-20.0	165487	18.0	49028	56.0	16984	94.0	6683
-19.0	159904	19.0	47590	57.0	16547	95.0	6531
-18.0	154529	20.0	46200	58.0	16122	96.0	6383
-17.0	149355	21.0	44855	59.0	15710	97.0	6239
-16.0	144374	22.0	43554	60.0	15310	98.0	6098
-15.0	139576	23.0	42295	61.0	14921	99.0	5961
-14.0	134956	24.0	41077	62.0	14544	100.0	5827
-13.0	130506	25.0	39898	63.0	14177	101.0	5697
-12.0	126219	26.0	38757	64.0	13820	102.0	5570
-11.0	122089	27.0	37652	65.0	13474	103.0	5446
-10.0	118108	28.0	36583	66.0	13137	104.0	5326
-9.0	114272	29.0	35548	67.0	12810	105.0	5208
-8.0	110575	30.0	34545	68.0	12492	106.0	5094
-7.0	107010	31.0	33574	69.0	12183	107.0	4982
-6.0	103574	32.0	32634	70.0	11883	108.0	4873
-5.0	100260	33.0	31723	71.0	11591	109.0	4767
-4.0	97064	34.0	30840	72.0	11307	110.0	4663
-3.0	93981	35.0	29986	73.0	11031	111.0	4562
-2.0	91008	36.0	29157	74.0	10762	112.0	4464
-1.0	88139	37.0	28355	75.0	10501	113.0	4367
0.0	85371	38.0	27577	76.0	10247	114.0	4274
1.0	82699	39.0	26823	77.0	10000	115.0	4182
2.0	80121	40.0	26092	78.0	9760	116.0	4093
3.0	77632	41.0	25383	79.0	9526	117.0	4006
4.0	75230	42.0	24696	80.0	9299	118.0	3921
5.0	72910	43.0	24030	81.0	9077	119.0	3838
6.0	70670	44.0	23384	82.0	8862	120.0	3757
7.0	68507	45.0	22758	83.0	8653	121.0	3678
8.0	66418	46.0	22150	84.0	8449	122.0	3601
9.0	64399	47.0	21561	85.0	8250	123.0	3526
10.0	62449	48.0	20989	86.0	8057	124.0	3452
11.0	60565	49.0	20435	87.0	7869		
12.0	58745	50.0	19896	88.0	7686		

TABLE 10
Wall-Mount Unit Alarm Index

Index	Alarm Log Export Variable	PGD Displayed Alarm Description
0	AI_retain	Error in the number of retain memory writings
1	AI_Err_retain_write	Error in retain memory writings
2	AI_ReturnAir1In	Circuit 1 Return Air Temperature Sensor Alarm
3	AI_ReturnAir1High	Circuit 1 High Return Air Temperature Alarm
6	AI_MixedAir1In	Circuit 1 Mixed Air Temperature Sensor Alarm
7	AI_MixedAir1High	Circuit 1 Mixed Air High Temperature
8	AI_MixedAir1Low	Circuit 1 Mixed Air Low Temperature
18	AI_OutdoorAirIn	Outdoor Air Temperature Sensor Alarm
19	AI_OutdoorHumIn	Outdoor Air Humidity Sensor Alarm
32	AI_SuctionTemp1In	Circuit 1 Suction Temperature Sensor Alarm
34	AI_SuctionPress1In	Circuit 1 Suction Pressure Sensor Alarm
36	AI_LowPress1	Circuit 1 Low Pressure Alarm
38	AI_HighPress1	Circuit 1 High Pressure Alarm
40	AI_Damper1FailedtoOpen	Circuit 1 Damper Failed to Open
41	AI_Damper1FailedtoClose	Circuit 1 Damper Failed to Close
48	AI_Freeze1In	Circuit 1 Freeze Temperature Sensor Alarm
50	AI_Freeze1	Circuit 1 Freeze Condition
54	AI_Filter1	Dirty Filter 1 Alarm
60	AI_EmergencyVent	Emergency Ventalation Mode Active
61	AI_EmergencyCool	Emergency Cooling Mode Active
62	AI_HeatRunaway	Extreme High Return Temp Alarm (Heat Cutout)
63	AI_UnitDisable	Unit Disable Alarm
66	AI_LowSH_1	Circuit 1 Low SuperHeat
67	AI_LOP_1	Circuit 1 Low Evaporation Pressure
68	AI_MOP_1	Circuit 1 High Evaportation Pressure
69	AI_HiTempCond_1	Circuit 1 High Condenser Temperature
70	AI_LowSuct_1	Circuit 1 Low Suction pressure
71	AI_EEV_1	Circuit 1 EEV motor error
72	AI_SelfTuning_1	Circuit 1 SelfTuning error
73	AI_EmergClos_1	Circuit 1 Emergency close
74	AI_TempDelta_1	Circuit 1 High Delta Temperature
75	AI_P_Delta_1	Circuit 1 High Delta Pressure
76	AI_RangeError_1	Circuit 1 Range Error
77	AI_ServicePosit_perc_1	Circuit 1 Service Position Percent
78	AI_ValveID_1	Circuit 1 Valve ID
92	AI_Offline_THTN_1	Th-Tune Device Offline
93	AI_TempPrb_THTN_1	Th-Tune Temperature Probe Alarm
94	AI_HumPrb_THTN_1	Th-Tune Humidity Probe Alarm
95	AI_ClkBrd_THTN_1	Th-Tune Clock Board Alarm