INSTALLATION INSTRUCTIONS

11EER Series
Wall Mount Heat Pump

Models:

J42HC-A	J48HC-A	J60HC-A
J42HC-B	J48HC-B	J60HC-B
J42HC-C	J48HC-C	J60HC-C

SOLAIR

Manual: 2100-736E
Supersedes: 2100-736D
Date: 7-23-21

CONTENTS

General Information 4
General 4
Shipping Damage 4
Additional Publications 4
Duct Work 6
Filters 6
Filter Removal/Installation 6
Switching Filter Sizes 6
Fresh Air Intake 8

Installation 9
Basic Installation Design and Application Planning.. 9
Wall Construction 9
Outdoor Area Inspection 9
Condensate Water Drainage 9
Indoor Ducted and Non-Ducted Applications 9
Indoor Supply Airflow 9
Indoor Return Airflow 9
Ducted Applications 9
Free Blow Applications 10
Thermostat or Indoor Temperature Sensor Placement 10
Unit Installation 10
Materials/Tool List 10
Wall Preparation 11
Wall Mount Installation to Wall Surface 11
Wiring – Main Power 18
High Voltage Connections 18
Wiring – Low Voltage 19
Low Voltage Connections 19
Unit Shutdown Feature 19
Balanced Climate™ Feature 19
Low Ambient Control 19
Outdoor Temperature Switch and Freeze Protection Thermostat 19

Start Up 23
General 23
Topping Off System Charge 23
Safety Practices 23
Important Installer Note 23
High Pressure Switch 23
Three Phase Scroll Compressor Start Up Information 23
Phase Monitor 24
Condenser Fan Operation 24
Service Hints 24
Sequence of Operation 24
Cooling 24
Heating 24
Balanced Climate™ Mode 25
Defrost Cycle 25
Low Pressure Switch Bypass Operation 26
High Pressure Switch Operation 27
Vent Connection Plug 27
Pressure Service Ports 27

Service 28
Solid State Heat Pump Control Troubleshooting Procedure 28
Checking Temperature Sensor Outside Unit Circuit 29
Troubleshooting Nidec SelecTech Series ECM Motors 30
If the Motor is Running 30
If the Motor is Not Running 30
Model SelecTech Communication Diagnostics ... 31
Fan Blade Setting Dimensions 32
R-410A Refrigerant Charge 32
Removal of Fan Shroud 32
Setting Unit Airflow 36
Blower Speeds 36
Speed Tap 1 – Vent/Blower Only 37
Speed Tap 2 – Balanced Climate 37
Speed Tap 3 – Default LO Cooling & Heating 37
Speed Tap 4 – Optional MED Cooling & Heating 37
Speed Tap 5 – Optional HI Cooling & Heating 37

FIGURES

Figure 1 Front Control Panel Cover 6
Figure 2 Removing Left Filter 6
Figure 3 Removing Second Filter 6
Figure 4 Filter Tabs in Down Position 7
Figure 5 Bend FIlter Tabs to Up Position 7
Figure 6 Remove Four Screws 7
Figure 7 Re-Install Filter Support Brackets into Upper Slots 7
Figure 8 Install Right 1" Filter 7
Figure 9 Install Left 1" Filter 7
Figure 10 Fresh Air Damper 8
Figure 11 Vent Installation/Removal Clearance Required 12
Figure 12 Unit Dimensions 13
Figure 13 Mounting Instructions 14
Figure 14 Electric Heat Clearance 15
Figure 15 Wall Mounting Instructions 16
Figure 16 Wall Mounting Instructions 16
Figure 17 Common Wall Mounting Installations 17
Figure 18 High Voltage Connections 18
Figure 19 Programmable Thermostat Connections 21
Figure 20 Non-Programmable Thermostat Connections 22
Figure 21 Defrost Control Board 26
Figure 22 Motor Connections 30
Figure 23 Motor Connections 31
Figure 24 Fan Blade Setting 32
Figure 25 Fan Shroud Removal 32
Figure 26 Speed Taps 36
Figure 27 Speed Taps 36

TABLES

Table 1 Clearance Required for Service Access and Adequate Condenser Airflow..... 12
Table 2 Minimum Clearances Required to Combustible Materials..... 12
Table 3 Wall Thermostats 20
Table 4 Humidity Controls 20
Table 5 CO_2 Controllers 20
Table 6 Thermostat Wire Size..... 20
Table 7 Troubleshooting 28
Table 8 Temperature vs. Resistance..... 29
Table 9 Fan Blade Dimensions..... 32
Table 10A Cooling Pressure – Standard Airflow..... 33
Table 10B Heating Pressure – Standard Airflow 33
Table 11 Cooling Pressure – Balanced Climate Airflow 34
Table 12 Electrical Specifications J**HC 35
Table 13 Recommended Airflow..... 36
Table 14 Blower Speeds for Unit Operational Modes..... 37
Table 15 Indoor Blower Performance 38
Table 16 Maximum ESP Electric Heat Only..... 39
Table 17 Electric Heat 39
Table 18 Vent and Control Options 40
Table 19 Optional Accessories 41

GRAPHS

Graph 1 J42HC FAD-NE5 W/O Exhaust Ventilation Delivery 42
Graph 2 J48HC FAD-NE5 W/O Exhaust Ventilation Delivery 42
Graph 3 J60HC FAD-NE5 W/O Exhaust Ventilation Delivery 43

Heat Pump Wall Mount Model Nomenclature

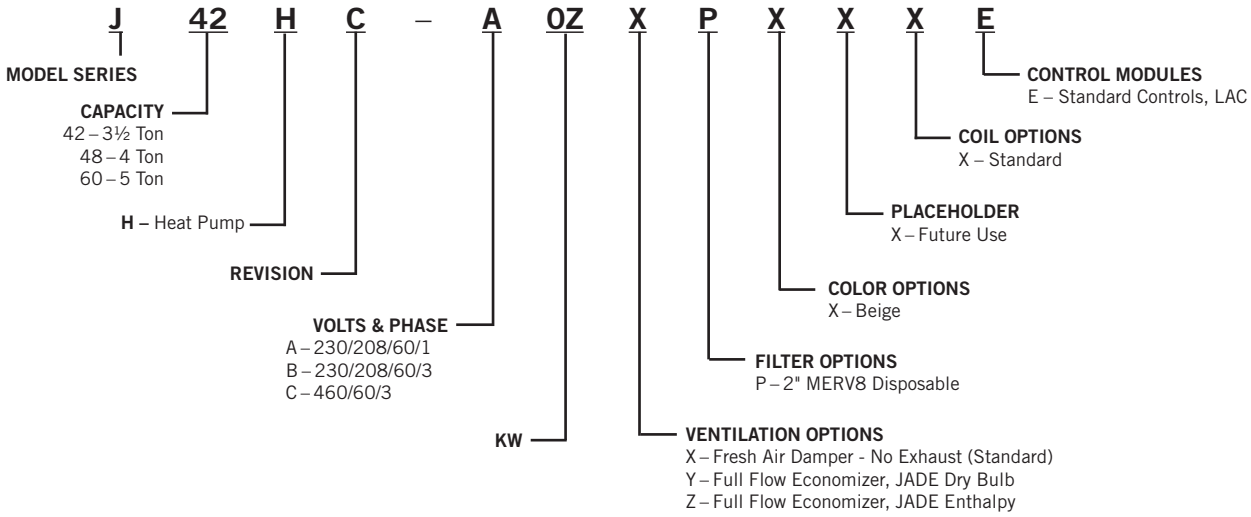

NOTE: *Vent option X and B is without exhaust capability. Air intake may require separate field-supplied barometric relief in building.*

GENERAL INFORMATION

General

The equipment covered in this manual is to be installed by trained, experienced service and installation technicians.

This appliance is not intended for use by persons (including children) with reduced physical, sensory or mental capabilities, or lack of experience and knowledge, unless they have been given supervision or instruction concerning use of the appliance by a person responsible for their safety.

Children should be supervised to ensure that they do not play with the appliance.

The refrigerant system is completely assembled and charged. All internal wiring is complete.

The unit is designed for use with or without duct work. Flanges are provided for attaching the supply and return ducts.

These instructions explain the recommended method to install the air cooled self-contained unit and the electrical wiring connections to the unit.

These instructions and any instructions packaged with any separate equipment required to make up the entire air conditioning system should be carefully read before beginning the installation. Note particularly "Starting Procedure" and any tags and/or labels attached to the equipment.

While these instructions are intended as a general recommended guide, they do not supersede any national and/or local codes in any way. Authorities having jurisdiction should be consulted before the installation is made. See **Additional Publications** for information on codes and standards.

Size of unit for a proposed installation should be based on heat loss calculation made according to methods of Air Conditioning Contractors of America (ACCA). The air duct should be installed in accordance with the Standards of the National Fire Protection Association for the Installation of Air Conditioning and Ventilating Systems of Other Than Residence Type, NFPA No. 90A, and Residence Type Warm Air Heating and Air Conditioning Systems, NFPA No. 90B. Where local regulations are at a variance with instructions, installer should adhere to local codes.

Shipping Damage

Upon receipt of equipment, the carton should be checked for external signs of shipping damage. If damage is found, the receiving party must contact the last carrier immediately, preferably in writing, requesting inspection by the carrier's agent.

Additional Publications

These publications can help when installing the heat pump. They can usually be found at the local library or purchased directly from the publisher. Be sure to consult the current edition of each standard.

National Electrical Code ..... ANSI/NFPA 70

Standard for the Installation of Air Conditioning and Ventilating Systems
..... ANSI/NFPA 90A

Standard for Warm Air Heating and Air Conditioning Systems
..... ANSI/NFPA 90B

Load Calculation for Winter and Summer Air Conditioning
..... ACCA Manual J Residential

Duct Design for Residential Winter and Summer Air Conditioning and Equipment Selection
..... ACCA Manual D

For more information, contact these publishers:

ACCA **Air Conditioning Contractors of America**
1712 New Hampshire Ave. N.W.
Washington, DC 20009
Telephone: (202) 483-9370
Fax: (202) 234-4721

ANSI **American National Standards Institute**
11 West Street, 13th Floor
New York, NY 10036
Telephone: (212) 642-4900
Fax: (212) 302-1286

ASHRAE **American Society of Heating, Refrigeration and Air Conditioning Engineers, Inc.**
1791 Tullie Circle, N.E.
Atlanta, GA 30329-2305
Telephone: (404) 636-8400
Fax: (404) 321-5478

NFPA **National Fire Protection Association**
Batterymarch Park
P.O. Box 9101
Quincy, MA 02269-9901
Telephone: (800) 344-3555
Fax: (617) 984-7057

ANSI Z535.5 Definitions:

DANGER: Indicate[s] a hazardous situation which, if not avoided, will result in death or serious injury. The signal word "DANGER" is to be limited to the most extreme situations. DANGER [signs] should not be used for property damage hazards unless personal injury risk appropriate to these levels is also involved.

WARNING: Indicate[s] a hazardous situation which, if not avoided, could result in death or serious injury. WARNING [signs] should not be used for property damage hazards unless personal injury risk appropriate to this level is also involved.

CAUTION: Indicate[s] a hazardous situation which, if not avoided, could result in minor or moderate injury. CAUTION [signs] without a safety alert symbol may be used to alert against unsafe practices that can result in property damage only.

NOTICE: [this header is] preferred to address practices not related to personal injury. The safety alert symbol shall not be used with this signal word. As an alternative to "NOTICE" the word "CAUTION" without the safety alert symbol may be used to indicate a message not related to personal injury.

⚠ WARNING

Electrical shock hazard.

Have a properly trained individual perform these tasks.

Failure to do so could result in electric shock or death.

⚠ WARNING

Electrical shock hazard.

Do not operate this equipment without an earth ground attached and always disconnect the remote electric power supplies before servicing.

Electrical shock can result in serious injury or death.

⚠ WARNING

Fire hazard.

Maintain minimum 1/4" clearance between the supply air duct and combustible materials in the first 3' feet of ducting.

Failure to do so could result in fire causing damage, injury or death.

⚠ WARNING

Heavy item hazard.

Use more than one person to handle unit.

Failure to do so could result in unit damage or serious injury.

⚠ CAUTION

Sharp metallic edges.

Take care and wear appropriate protective devices to avoid accidental contact with sharp edges.

Failure to do so can result in personal injury.

Duct Work

All duct work, supply and return, must be properly sized for the design airflow requirement of the equipment. Air Conditioning Contractors of America (ACCA) is an excellent guide to proper sizing. All duct work or portions thereof not in the conditioned space should be properly insulated in order to both conserve energy and prevent condensation or moisture damage.

Refer to Maximum ESP of Operation Electric Heat table on page 39.

Design the duct work according to methods given by the Air Conditioning Contractors of America (ACCA). When duct runs through unheated spaces, it should be insulated with a minimum of 1" of insulation. Use insulation with a vapor barrier on the outside of the insulation. Flexible joints should be used to connect the duct work to the equipment in order to keep the noise transmission to a minimum.

All model series require a 1/4" clearance to combustible material for the first 3' of duct attached to the outlet air frame. See instructions on page 11 and Figures 13 – 17 (pages 14 – 17) for further details.

Ducts through the walls must be insulated and all joints taped or sealed to prevent air or moisture entering the wall cavity.

Some installations may not require a return air duct. A metallic return air grille is required with installations not requiring a return air duct. The spacing between louvers on the grille shall not be larger than 5/8".

Any grille that meets with 5/8" louver criteria may be used. It is recommended that Bard Return Air Grille Kits RG5 or RFG5 be installed when no return duct is used. Contact distributor or factory for ordering information. If using a return air filter grille, filters must be of sufficient size to allow a maximum velocity of 400 fpm.

NOTE: *If no return air duct is used, applicable installation codes may limit this cabinet to installation only in a single story structure.*

Filters

The filters can be serviced from the outside by removing the front control panel cover (see Figure 1). Two (2) 20" x 20" x 2" disposable filters come standard with each unit.

Filter Removal/Installation

1. Remove left filter first by pulling filter removal slide out (see Figure 2).
2. Slide second filter to the left around the wires and pull the filter out (see Figure 3).
3. Reverse the order for new filter installation.

NOTE: *When installing new filters, make sure that airflow arrows on filters point up.*

FIGURE 1
Front Control Panel Cover

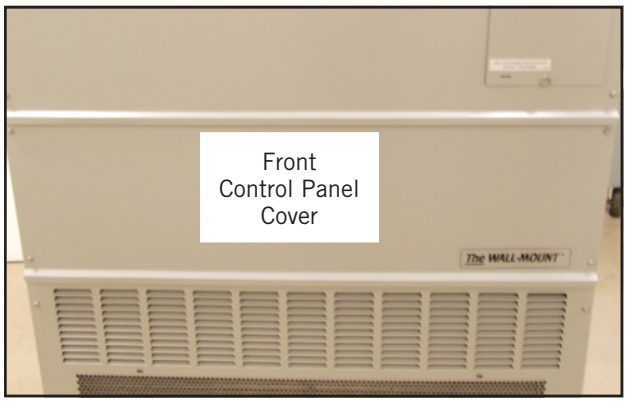

FIGURE 2
Removing Left Filter

FIGURE 3
Removing Second Filter

Switching Filter Sizes

1. To switch from 2" to 1" filters, start by removing the filter slide and bend the tabs up (see Figures 4 and 5 on page 6).
2. Locate the filter support brackets and remove the four (4) screws holding them to the top of the control panel (see Figure 6).

FIGURE 4
Filter Tabs in Down Position

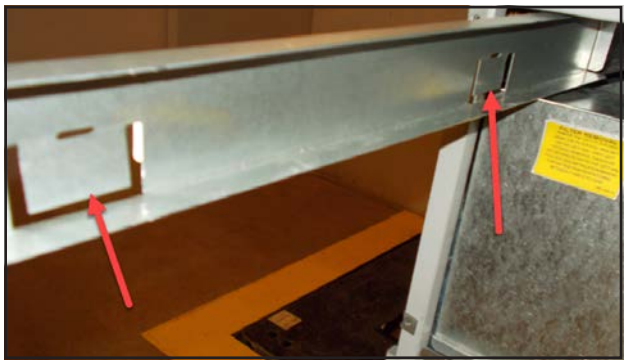

FIGURE 5
Bend Filter Tabs to Up Position

FIGURE 6
Remove Four Screws

3. Pull the brackets out towards the front of the unit. The back of the bracket will slip out of the lower slots at the back of the filter tray.
4. Re-install the filter support brackets into the upper slots at the back of the filter tray (see Figure 7).
5. Re-install the four (4) screws into the lower screw holes on the filter support brackets. If the tabs have been bent down, they will need to be straightened out to be used.
6. Install the right 1" filter first followed by the left filter (see Figures 8 and 9).

FIGURE 7
Re-Install Filter Support Brackets into Upper Slots

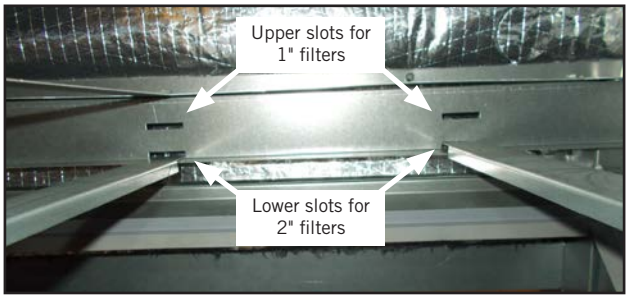

FIGURE 8
Install Right 1" Filter

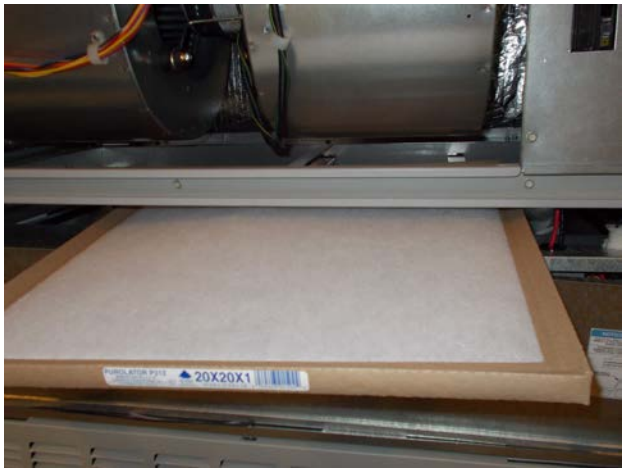

FIGURE 9
Install Left 1" Filter

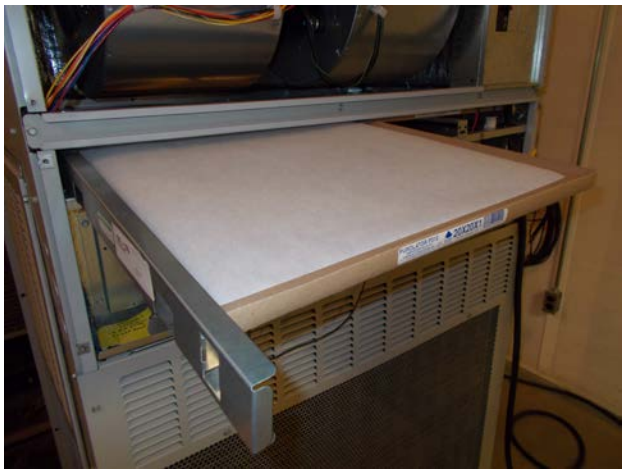

NOTE: *When installing new filters, make sure that airflow arrows on filters point up.*

7. Reverse the steps above to switch from 1" to 2" filters.

Fresh Air Intake

All units are built with fresh air inlet louvers punched in the side grilles.

If the unit is equipped with a fresh air damper assembly, the assembly is shipped already attached to the unit. The damper blade is locked in the closed position. To allow the damper to operate, remove the two (2) screws in the bottom of the blade (see Figure 10). Remove right side grille to access the damper blade.

FIGURE 10
Fresh Air Damper

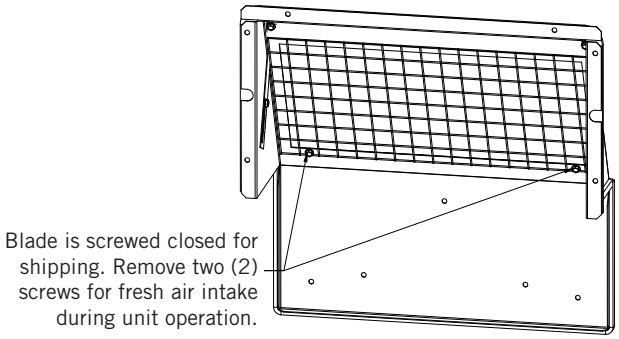

MIS-3977

There is an adjustable slide on the side of the fresh air intake that can be adjusted to limit how far the damper opens so that the amount of fresh air that enters the structure is regulated.

Graphs found on pages 42 and 43 give approximate fresh air amounts based on the slide adjustment setting.

All capacity, efficiency and cost of operation information is based upon the fresh air blank-off plate in place.

The blank-off plate is available upon request from the factory and is installed in place of the fresh air damper shipped with each unit.

Basic Installation Design and Application Planning

Successful unit installations require proper planning and site inspection before installation begins. Before installing the wall mount unit, make sure that all service and airflow clearances are met and that the unit can meet all applicable code and regulation requirements. Provide an inspection of both the inside and outside of the structure by reviewing floorplans and/or visiting the installation site.

Wall Construction

The wall must be inspected to ensure that the weight of the unit can be supported. Be sure to review all applicable construction codes and regulations including seismic requirements. When inspecting wood frame walls, the wall construction must be strong and rigid enough to carry the weight of the unit without transmitting any unit vibration. It is important that the side unit wall mounting lags and optional bottom bracket are supported by structural members inside the wall cavity. Concrete block and brick walls must be thoroughly inspected to ensure that they are capable of carrying the weight of the installed unit. Metal buildings must contain structural components to support the unit weight. If heavily corrugated siding is present, it may need to be trimmed and flashed similar to a window to provide a flat, even surface to attach and seal the unit to the wall. Heavy gauge corrugations that would be present on shipping containers and blast-proof structures may require the installation of a metal plate over the corrugated area. It is important that the unit area is weatherized and sealed to avoid air and water infiltration into the area between the unit and the wall.

Outdoor Area Inspection

Inspect the outdoor area of the jobsite or review construction plans and locate the area where the wall mount is to be installed. The outdoor area must be free from obstructions including fences, bushes and walls that will hinder unit operation regarding outdoor condenser airflow and unit serviceability. Do not install units in enclosed areas that limit the amount of ambient temperature airflow. Warm air will exit the front condenser section of the unit, and outdoor ambient temperature air must be able to enter side intake condenser openings of the unit. Portable or modular building placement must be in a way that the wall mount units have a constant supply of outdoor air for proper unit operation. Make sure that the service panels of the unit are accessible. Inspect wall surfaces for obstructions that could hinder unit installation and servicing including outdoor electrical conduits, junction boxes, wall drains, vent hoods, windows, doors, overhangs and posts.

Condensate Water Drainage

Review all codes and requirements for unit condensate drainage. A clear, flexible PVC drain hose (3/4" ID, 1" OD) extends from the drain pan in the upper section of the unit and extends down to the unit base. An opening is supplied towards the back of the unit base for the drain hose to pass through, and the hose extends 1" to 2" below the unit base. Water removed from the indoor air (condensate) will be expelled from the unit in large amounts during cooling operation through the hose. Units running in cooling operation in cold outdoor below freezing conditions can cause the condensate to freeze after leaving the drain hose. In the event the drain hose is connected to a drain system of some type, it must be an open or vented type system to ensure proper drainage throughout seasonal use.

Indoor Ducted and Non-Ducted Applications

Air distribution inside the structure being conditioned plays an important role in making sure the area is a consistent temperature. Improper air distribution can result in areas being cooler or warmer, electrical equipment not receiving sufficient airflow or occupancy discomfort felt inside an area. Thermostat or indoor temperature sensor placement inside the area being conditioned also plays an important role in indoor climate control.

Indoor Supply Airflow

Indoor installation areas must provide a non-restrictive path for the conditioned supply air to leave supply grilles and registers. Inspect the area to ensure that all indoor portions of the room or rooms will have access to supply air. Ductwork may be used to ensure proper air circulation and all provided ductwork guidelines and clearances must be followed. Non-ducted applications must use a supply louver grille installed over the supply opening inside the room. Be sure to adjust supply deflectors to properly disperse the conditioned supply air to all parts of the room. Avoid closing sections of the supply grilles which would cause unneeded supply duct pressurization.

Indoor Return Airflow

A non-restrictive path for room air returning to the center section of the unit must be provided inside the room. Avoid placing objects including furniture, electronics equipment, equipment racks and cabinets directly in front of the unit return grilles and registers. Bard recommends at least 2' between solid objects and return grilles or registers. Ductwork may be used to ensure proper air circulation and all provided ductwork guidelines and clearances must be followed. Non-ducted applications must use a return louver grille installed over the return opening inside the room.

Ducted Applications

Field fabricated supply and return duct work may be installed inside the structure being conditioned. A short supply and/or return stub duct may be connected to the unit supply and return flanges before unit installation to help with duct connections inside the structure. Supply and return ducts must be properly sized for the design airflow requirement of the equipment. Air Conditioning Contractors of America (ACCA) is an excellent guide to proper sizing. All duct work or portions thereof not in the conditioned space should be properly insulated in order to conserve energy, reduce heat conductivity, and prevent condensation or moisture damage. Refer to Maximum External Static Pressure (ESP) of Operation table on page 39. Design the duct work according to methods given by the Air Conditioning Contractors of America (ACCA). When duct work is installed in unheated spaces, it should be insulated with a minimum of 1" of insulation. Use insulation with a vapor barrier on the outside of the insulation. Flexible joints should be used to connect the duct work to the equipment in order to keep the noise transmission to a minimum. Ducts through the walls must be insulated and all joints taped or sealed to prevent air or moisture from entering the wall cavity.

All model series require a 1/4" clearance to combustible material for the first 3' of duct attached to the outlet air frame is required. See instructions on page 11 and Figures 13 – 17 (pages 14 – 17) for further details.

⚠ WARNING

Fire hazard.

Maintain minimum 1/4" clearance between the supply air duct and combustible materials in the first 3' of ducting.

Failure to do so could result in fire causing damage, injury or death.

Free Blow Applications

Some installations may not require extensive supply duct work throughout the structure and are referred to as free blow applications. A short field-fabricated supply duct must be used in the wall cavity to transition between the supply collar on the unit and the supply louver grille in the room. The duct must be properly insulated in order to conserve energy, reduce heat conductivity and prevent condensation or moisture damage. All joints must be taped or sealed to prevent air or moisture entering the wall cavity. Follow all clearances including distances to combustible materials and all instructions provided in this manual.

A non-restrictive metallic supply air grille with deflectors is required for free blow applications. Contact the local Bard distributor or visit www.bardhvac.com for ordering information.

A metallic return air grille is required for non-ducted applications. The spacing between louvers on the grille shall not be larger than 5/8". It is recommended that a Bard Return Air Grille Kit is installed that is designed specifically for the wall mount product. Contact the local Bard distributor or visit www.bardhvac.com for ordering information. A field-supplied return grille that meets the 5/8" louver criteria and does not cause the unit to exceed the maximum specified external static pressure (ESP) may be used. If using a return air filter grille, filters must be of sufficient size to allow a maximum velocity of 400 fpm. Filter return air grilles do not filter air being brought into the structure through ventilation options including fresh air dampers, ventilators, economizers and energy recovery ventilators. Be sure to install the return grille with the louvers pointed downward towards the floor. This will help ensure return air is drawn upward from the floor and improve air circulation in the room.

NOTE: *If no return air duct is used, applicable installation codes may limit this cabinet to installation only in a single story structure.*

Thermostat or Indoor Temperature Sensor Placement

The location and installation of the thermostat or temperature sensor that monitors indoor temperature is very important regarding unit operation. Avoid placing the thermostat in an area exposed to direct sunlight or air from doorways leading outdoors. Use a piece of insulating material to close off conduit openings or holes in the wall surface for wire entry into the thermostat or temperature sensor. This will help avoid non-conditioned air from entering the thermostat and effecting temperature and/or humidity readings. As common practice, the thermostat or temperature sensor should measure the temperature of the air being returned to the unit, and not the conditioned air being supplied by the unit. Placing the thermostat or temperature sensor near a return air opening will normally result in optimal unit performance.

Unit Installation

Make sure to have the proper tools at the work site that are needed for unit installation. The following steps are provided to ensure the unit is installed properly to the wall surface, and that the unit will provide years of service with minimal service requirements.

Materials/Tools List

Additional hardware and miscellaneous supplies are needed for installation. These items are field supplied and must be sourced before installation. This list also includes tools needed for installation.

- Appropriate safety gear including gloves and safety glasses
- 5/16" hex bit with drill driver
- Phillips head screwdriver
- Small straight (thermostat) screwdriver
- Tape measure
- Leveling device
- Two (2) tubes of caulk and caulk gun
- Utility knife
- Tools for cutting holes in the wall surface (if needed)
- Electrical components and wiring along with electrical tools
- Multimeter
- Wall fasteners for side flanges, bottom mounting bracket and top rain flashing.
- Duct tape and/or other duct sealing materials.

Wall Preparation

1. Two holes for the supply and return air openings must be cut through the wall as shown in Figure 13 on page 14. Be sure the openings are square and level. Follow all clearances including distances to combustible materials and all instructions provided in this manual.
2. Review all electrical requirements provided in this manual and plan out electrical entrances into the building. Also plan electrical conduit routing and thermostat placement, if necessary.
3. Install necessary duct work and prepare the openings for unit installation.
4. Clean the exterior wall where the unit is to be installed and make sure it is able to provide a smooth, level, debris-free surface. Remove all construction debris from the supply, return and electrical hole cutting process.

Wall Mount Installation to Wall Surface

1. Remove packaging from unit and make sure the unit is not damaged before installation. A top rain flashing is supplied for field use and is mounted to the back of the unit for shipping. Remove the rain flashing before locating the unit against the wall. Top rain flashing is required to avoid water entering the area behind the unit that is against the wall. A bottom mounting bracket, attached to the skid for shipping, is provided for ease of installation but is not required. Review all requirements listed on unit labels and on serial plate located on the side of the unit.
2. Locate and mark bolt hole locations and bottom mounting bracket location. Install bottom mounting bracket with field-supplied fasteners to wall if it is to be used (optional). Bracket must be level and installed in the correct location to help support the unit during the installation process (see Figure 13).
3. Position the wall mount unit close to the wall surface where it will be installed. Install rain flashing at the top of the unit facing the wall by hooking the hem bend into the rear bend of the unit top (see Figure 13).
4. Apply a liberal amount of caulk on left and right cabinet side wall mount brackets and back of top rain flashing. Place unit back surface flush against wall. Unit must be level to ensure proper condensate drainage. Optional bottom bracket may be used to help support the unit.
5. Units are secured to the wall by using field-supplied fasteners along each side of the wall mount through the built-in wall mounting brackets. It is the responsibility of the installer to select the proper fastener to secure the unit to the wall based on wall construction and applicable building codes. Typical installations may include 5/16" fasteners with 7/8" diameter flat washers. Be sure unit is securely mounted and all weight-bearing fasteners are attached to the weight supporting structural members of the wall.
6. Apply a bead of caulk between the back of the unit top and the front surface of the top rain flashing (see Figure 13).
7. Connect unit duct work from the inside of the building following all clearances and instructions provided. For additional mounting rigidity, the return air and supply air frames or collars can be drilled and screwed or welded to the structural wall itself (depending upon wall construction). Be sure to use code approved duct tape or other sealing materials to seal the duct work to the unit.
8. On side-by-side installations, maintain a minimum of 20" clearance on both sides to allow access to heat strips and to provide proper airflow to the outdoor coil. Additional clearance may be required to meet local or national codes.

TABLE 1
Clearance Required for Service Access and Adequate Condenser Airflow

Model	Left Side*	Right Side*	Discharge – Front
J42HC J48HC J60HC	20"	20"	10'

* For vent installation and removal, one side of the unit requires 45" clearance in the vent area. See Figure 11 for clarity.

See Specifications Sheet S3591.

TABLE 2
Minimum Clearances Required to Combustible Materials

Model	Supply Air Duct (1st 3')	Cabinet
J42HC J48HC J60HC	1/4"	0"

FIGURE 11
Vent Installation/Removal Clearance Required

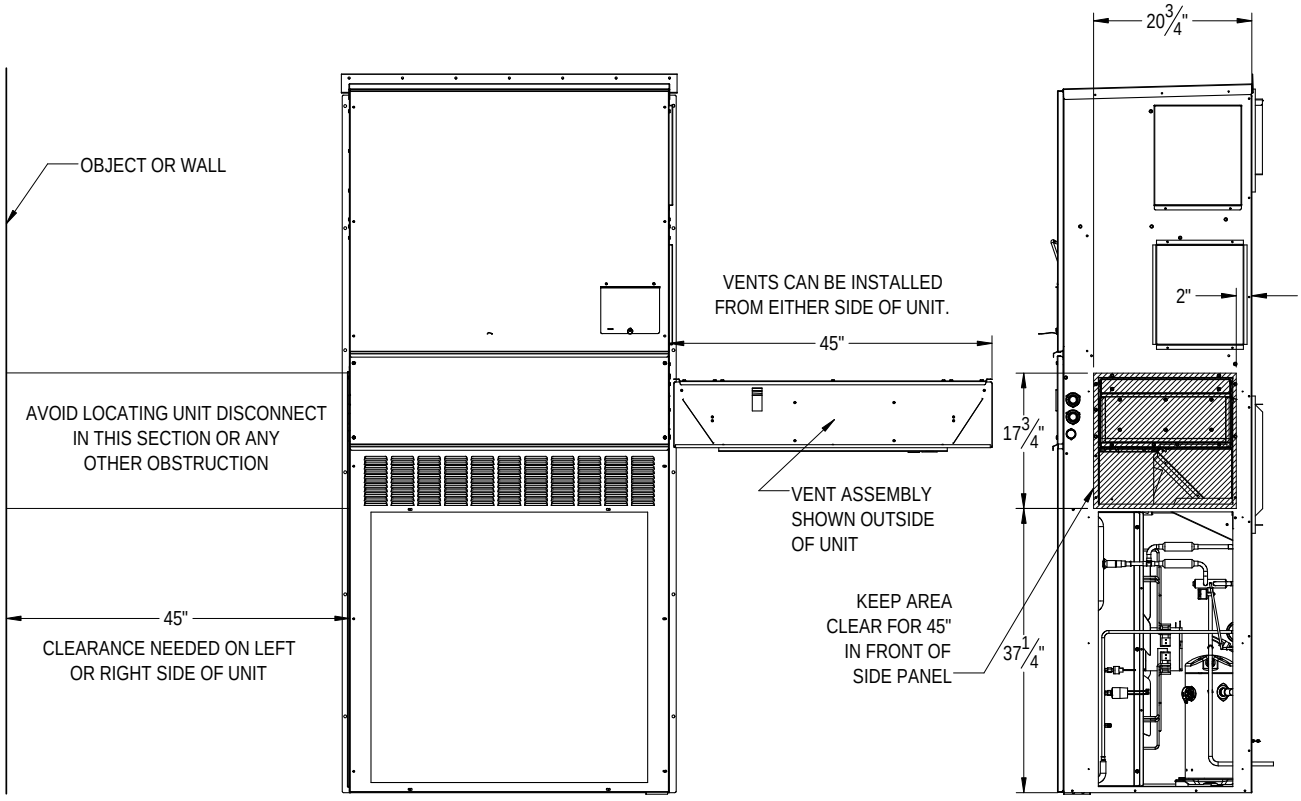

MIS-4042 A

FIGURE 12
Unit Dimensions

	Width (W)	Depth (D)	Height (H)	Supply		Return														
				A	B	C	B	E	F	G	I	J	K	L	M	N	O	R	S	T
J42HC J48HC	42.00	25.52	84.75	9.88	29.88	15.88	29.88	43.88	12.63	39.06	30.06	43.25	26.94	55.59	52.59	8.82	43.00	1.44	16.00	1.88
J60HC	42.00	25.52	92.88	9.88	29.88	15.88	29.88	43.88	12.63	45.00	30.06	49.25	35.06	61.72	58.72	8.82	43.00	1.44	16.00	10.00

All dimensions are in inches. Dimensional drawings are not to scale.

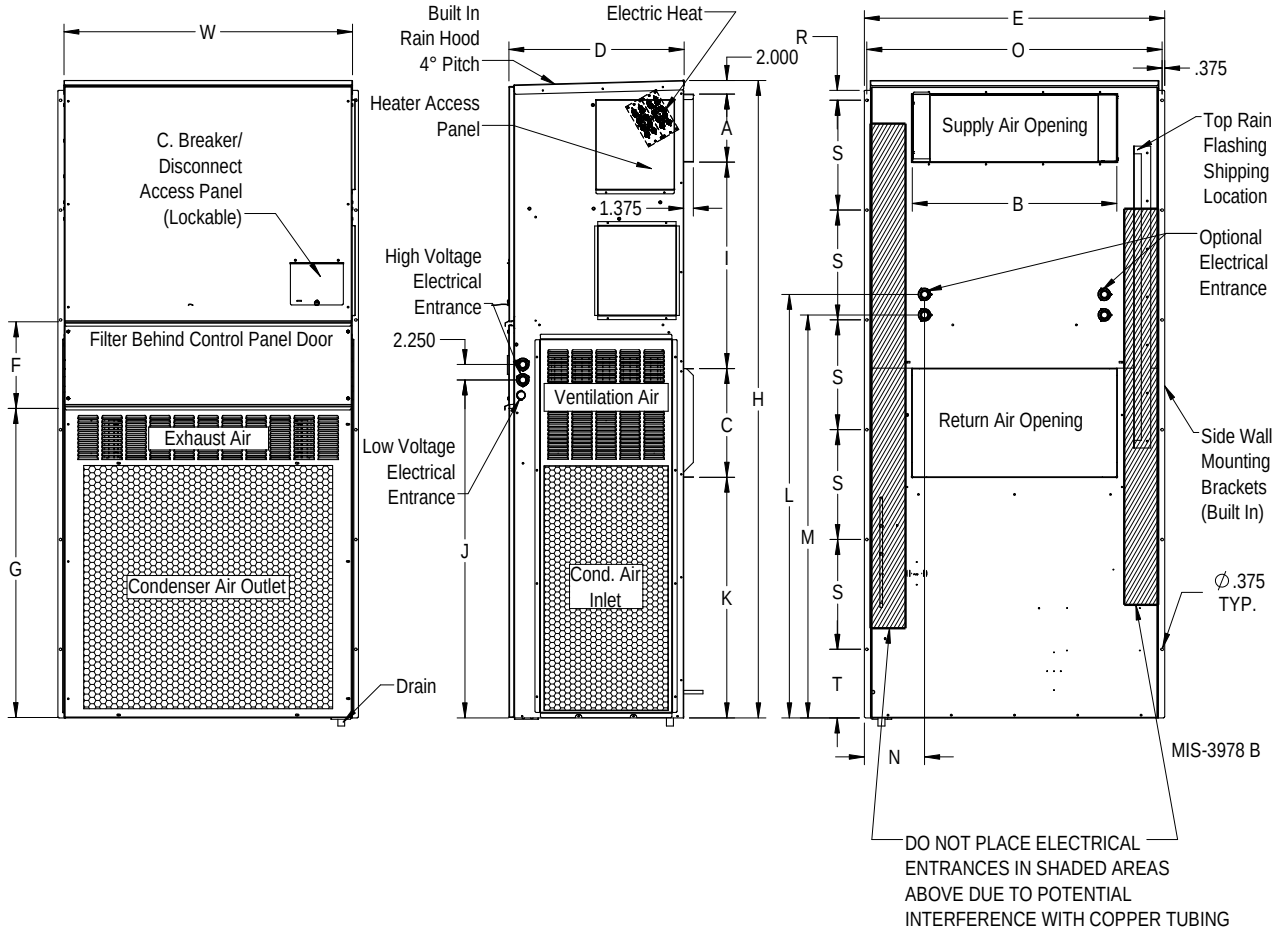

FIGURE 13
Mounting Instructions

UNITS	REQUIRED DIMESIONS	A	B	C	D	E	F	G
J42HC-J48HC UNITS	REQUIRED DIMESIONS TO MAINTAIN 1/4" MIN. CLEARANCE FROM COMBUSTIBLE MATERIALS	30 1/2	10 1/2	6 1/4	1 1/4	29 3/4	16	1 7/8
	REQUIRED DIMENSIONS TO MAINTAIN RECOMMENDED 1" CLEARANCE FROM COMBUSTIBLE MATERIALS	32	12	5 1/2	2	29	16	1 7/8
J60HC UNITS	REQUIRED DIMESIONS TO MAINTAIN 1/4" MIN. CLEARANCE FROM COMBUSTIBLE MATERIALS	30 1/2	10 1/2	6 1/4	1 1/4	29 3/4	16	10
	REQUIRED DIMENSIONS TO MAINTAIN RECOMMENDED 1" CLEARANCE FROM COMBUSTIBLE MATERIALS	32	12	5 1/2	2	29	16	10

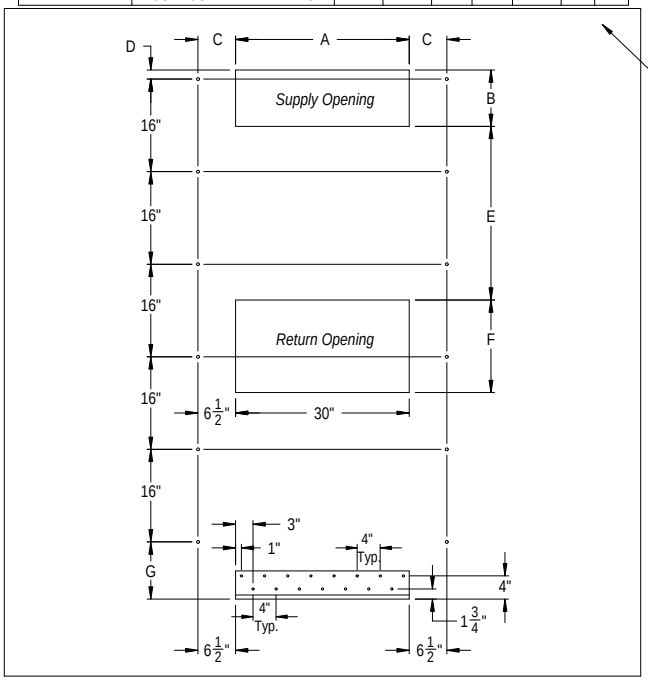

Wall Opening and Hole Location View

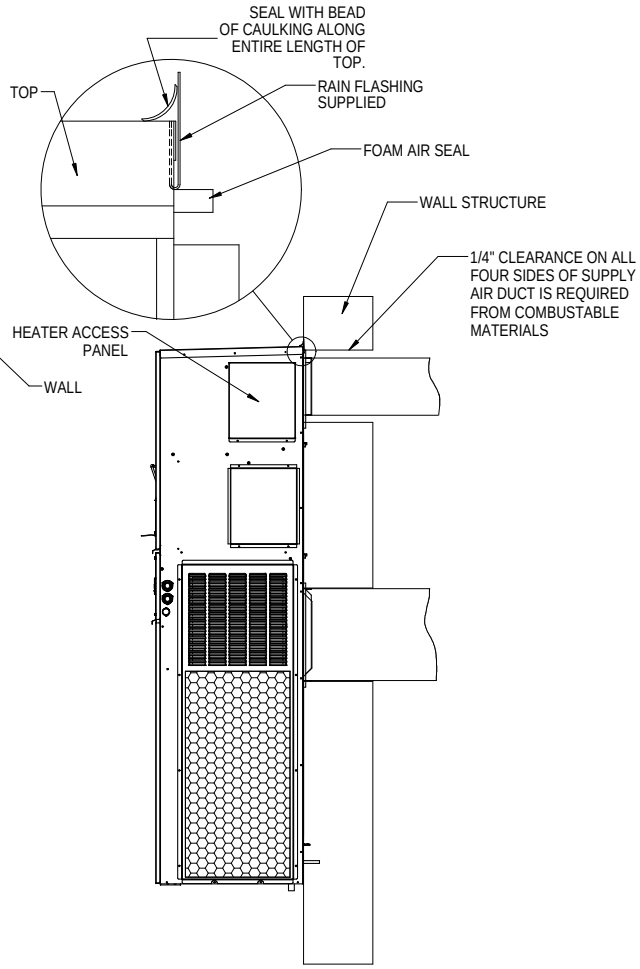

Right Side View

MIS-4116 B

FIGURE 14
Electric Heat Clearance

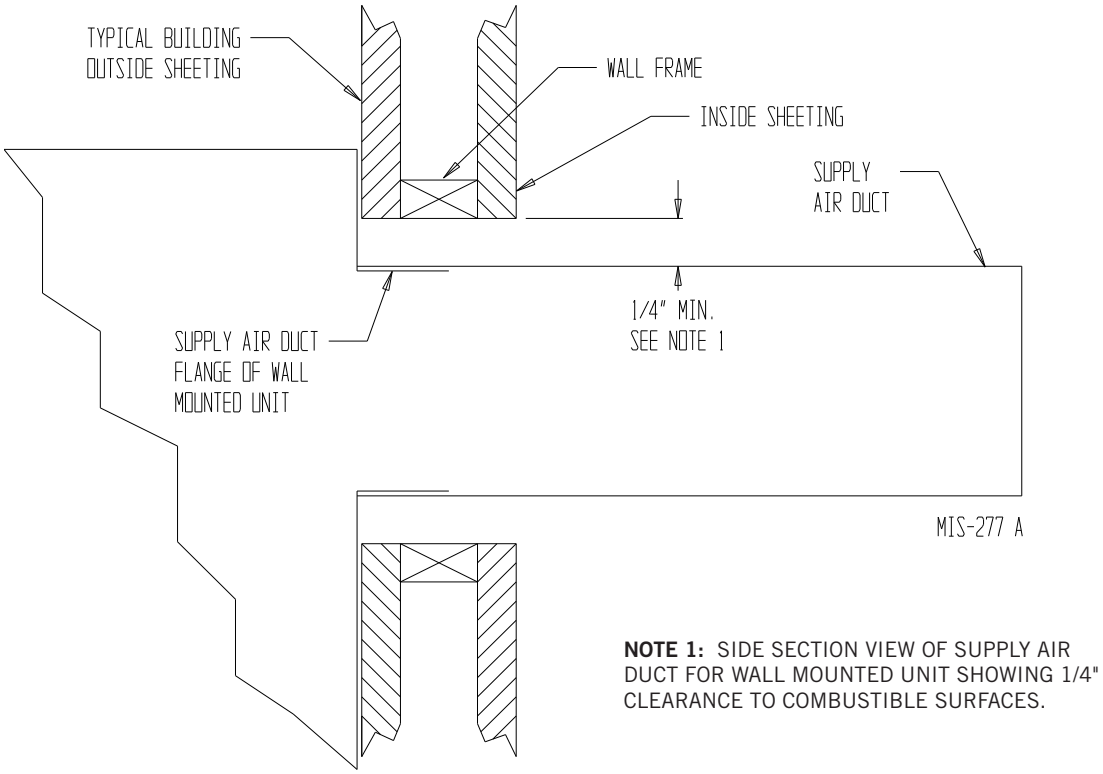

NOTE 1: SIDE SECTION VIEW OF SUPPLY AIR DUCT FOR WALL MOUNTED UNIT SHOWING 1/4" CLEARANCE TO COMBUSTIBLE SURFACES.

⚠ WARNING

Fire hazard.

Maintain minimum 1/4" clearance between the supply air duct and combustible materials in the first 3' of ducting.

Failure to do so could result in fire causing damage, injury or death.

FIGURE 15
Wall Mounting Instructions

See Figure 13 Mounting Instructions

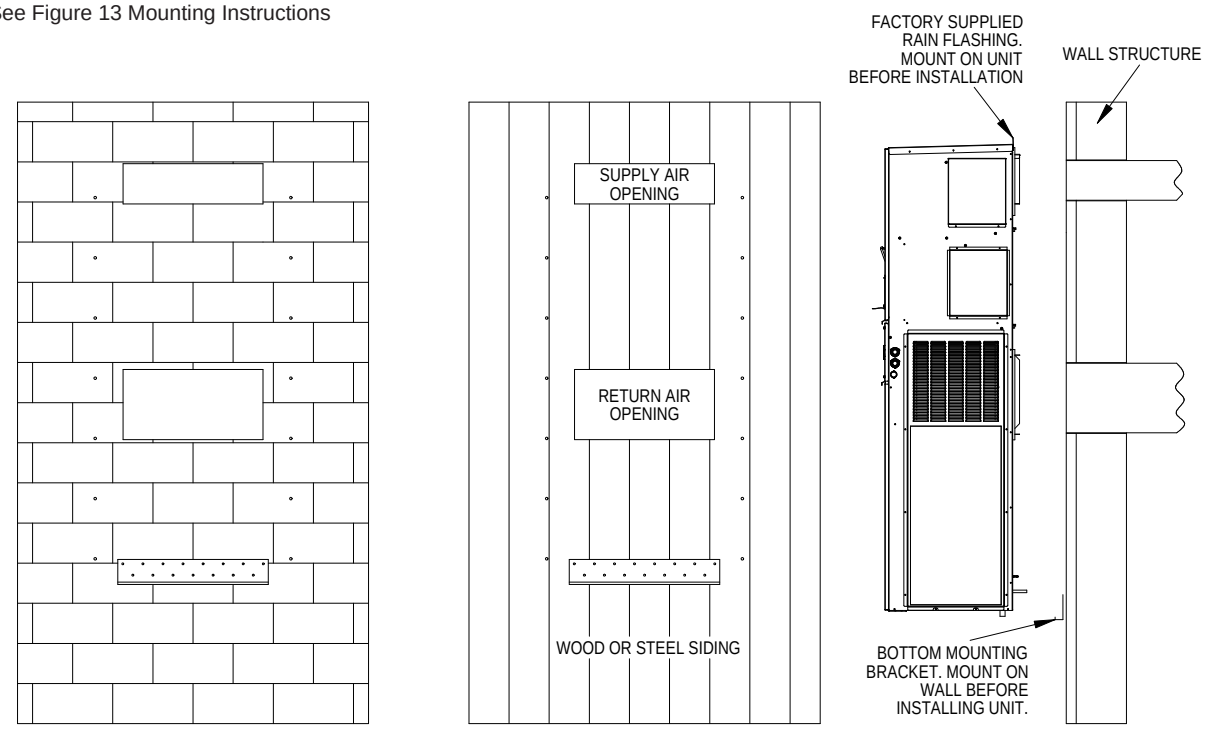

MIS-3981 B

FIGURE 16
Wall Mounting Instructions

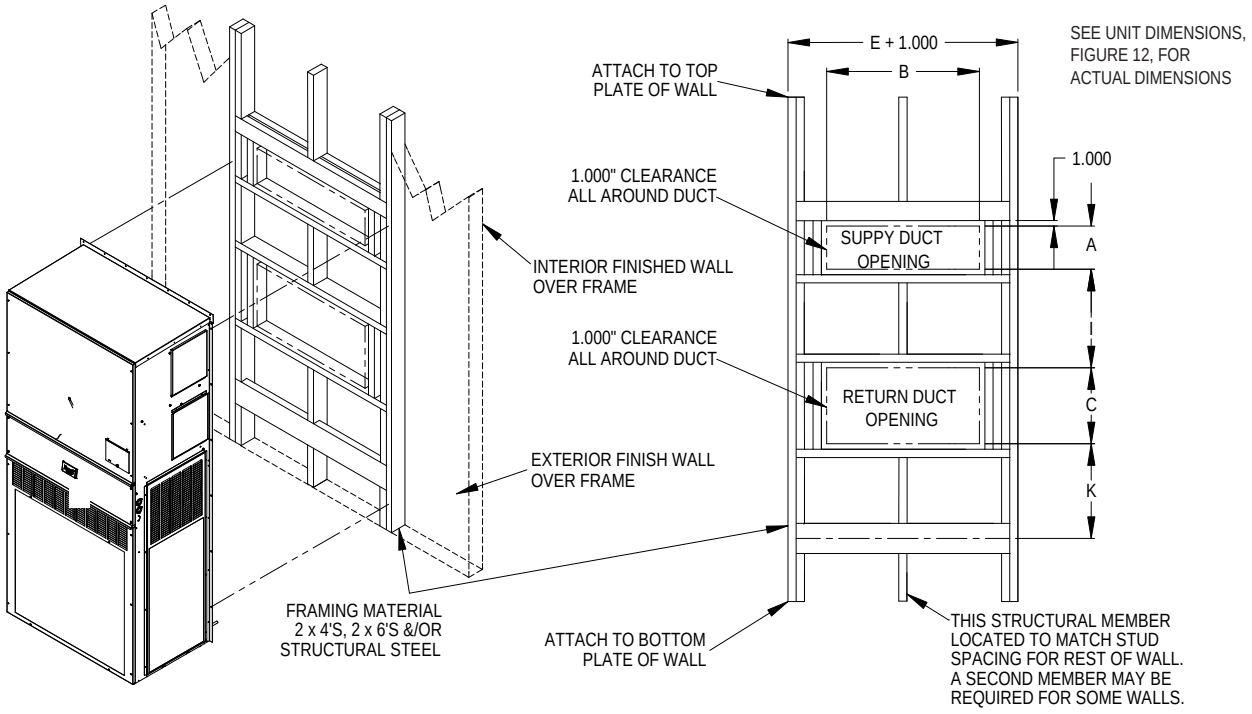

MIS-3982 B

FIGURE 17
Common Wall Mounting Installations

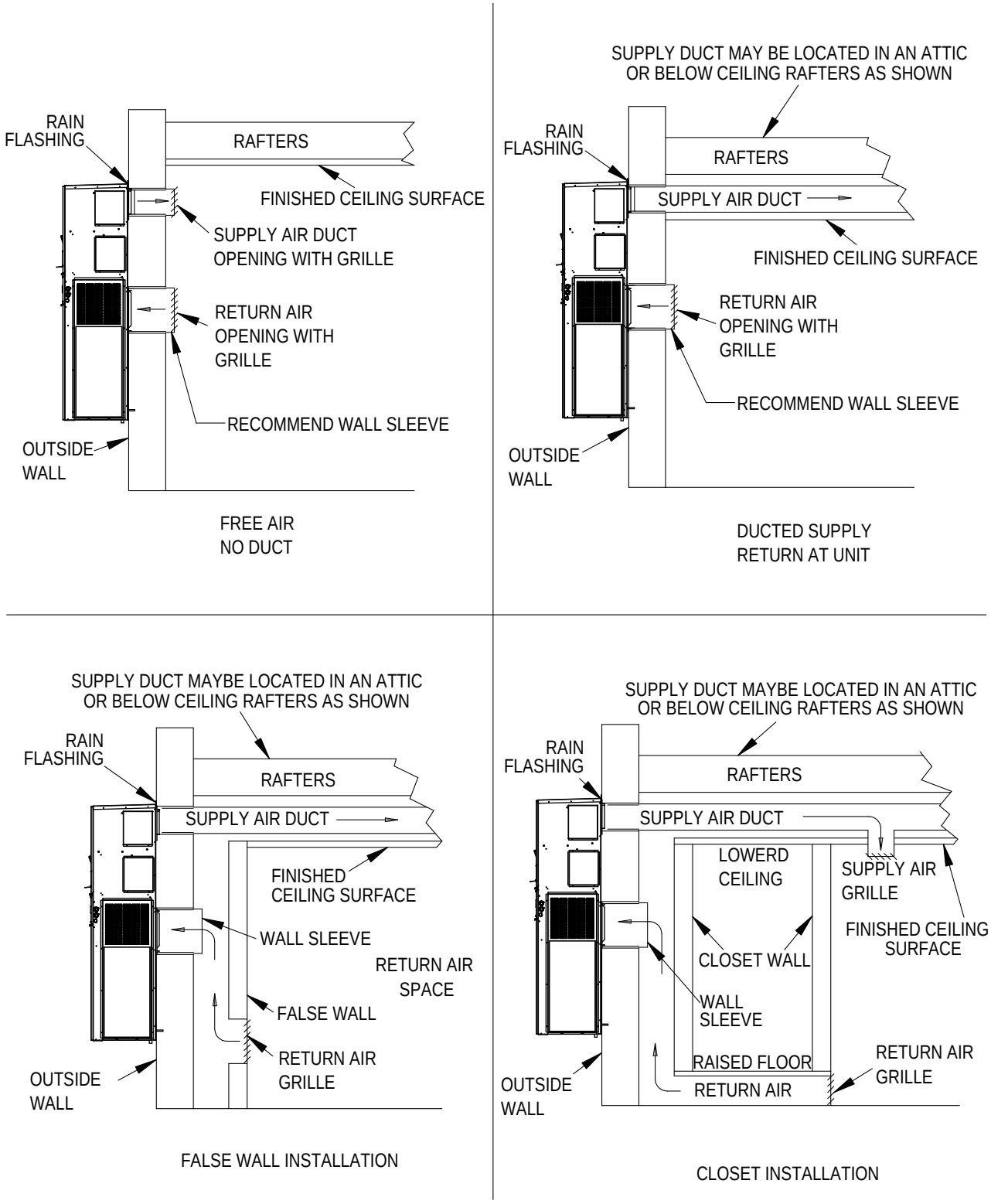

Wiring – Main Power

⚠ WARNING

Electrical shock hazard.

Do not operate this equipment without an earth ground attached and always disconnect the remote electric power supplies before servicing.

Electrical shock can result in serious injury or death.

Main electrical power must be supplied to the unit from a clean, reliable power source. Verify voltage being supplied to the unit is consistent during all times of the day and within the range specified for the unit in the unit specifications and on the unit serial plate. Voltage must be measured at the field power connection point in the unit and while the unit is operating at full load (maximum amperage operating condition).

Refer to the unit serial plate and unit specifications for wire sizing information and maximum fuse or circuit breaker size. Each outdoor unit is marked with a "Minimum Circuit Ampacity". This means that the field wiring used must be sized to carry that amount of current. Depending on the installed KW of electric heat, there may be two field power circuits required. If this is the case, the unit serial plate will so indicate.

All models are suitable only for connection with copper wire. Each unit and/or wiring diagram will be marked "Use Copper Conductors Only". These instructions must be adhered to. Refer to the National Electrical Code (NEC) for complete current carrying capacity data on the various insulation grades of wiring material. All wiring must conform to NEC and all local codes.

The electrical data on the serial plate, in the unit specifications and also in Table 12 on page 35 list fuse and wire sizes (75°C copper) for all models including the most commonly used heater sizes. Also shown are the number of field power circuits required for the various models with heaters. The unit rating plate lists a "Maximum Time Delay Relay Fuse" or circuit breaker that is to be used with the equipment. The correct type and size must be used for proper circuit protection and also to ensure that there will be no nuisance tripping due to the momentary high starting current of the compressor motor.

Three phase models must have proper phasing. A phase monitor is included in all three phase models, and will indicate improper phasing during a call for cooling (24VAC at Y1 terminal). See provided information included in this document regarding the phase monitor.

High Voltage Connections

Route field wires under the field wire shield shown in Figure 18. (The field wire shield can be removed for wire installation.) If field power is supplied to the left side of the unit, run the high voltage wires under the shield shown in Figure 18 and to the right of the wire shield next to the compressor contactor and up into

FIGURE 18
High Voltage Connections

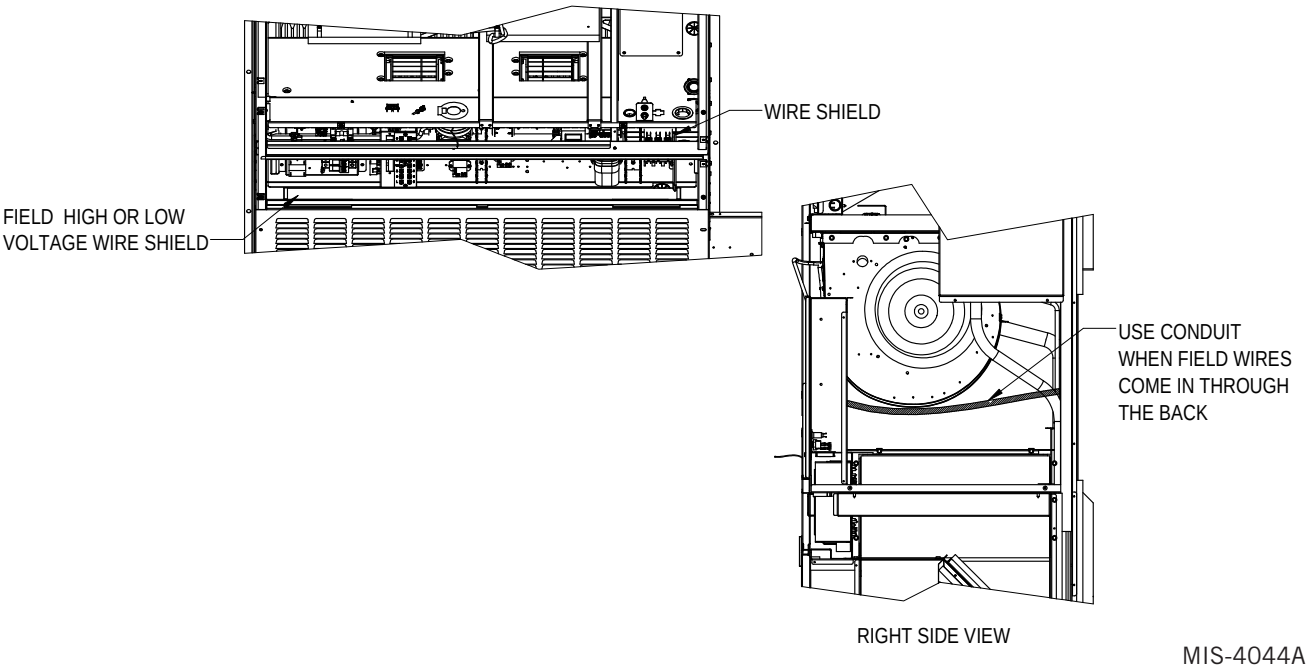

MIS-4044A

the upper control panel where the connections are made. (The field wire shield can be removed for wire installation.) If field power is supplied to the right of side of the unit, the low voltage wires can be run under the field wire shield to access the low voltage terminal strip.

When field wires are supplied through the back of the unit, flexible conduit must be extended through the back of the unit and terminate into the knock-outs on the upper control panel (see Figure 18).

Wiring – Low Voltage

All 230/208V 1 phase and 3 phase equipment have dual primary voltage transformers. All equipment leaves the factory wired on 240V tap. For 208V operation, reconnect from 240V to 208V tap. The acceptable operating voltage range for the 240 and 208V taps are:

Tap: 240 Range: 253 – 216
Tap: 208 Range: 220 – 187

NOTE: *The voltage should be measured at the field power connection point in the unit and while the unit is operating at full load (maximum amperage operating condition).*

For low voltage wiring, an 18 gauge copper, color-coded cable is recommended. See Table 6 on page 20 for more information.

Low Voltage Connections

These units use a 24-volt AC low voltage circuit.

C terminal is the *24VAC common and is grounded.*

G terminal is the *indoor blower input*.

Y1 terminal is the *1st Stage input for cooling.*

Y2 terminal is the *2nd Stage compressor input for cooling* (if equipped with an economizer) or *Y2 disables Balanced Climate mode if the Y1-Y2 jumper is removed* (see page 25).

B/W1 terminal is the *reversing valve input*. The reversing valve must be energized for heating mode.

W2 terminal is the *1st stage electric heat* (if equipped).

W3 terminal is the *2nd stage of electric heat* or *emergency heat* (if equipped).

A terminal is the *ventilation input*. This terminal energizes any factory-installed ventilation option and indoor blower.

D terminal is the *dehumidification input*. If installed, this terminal energizes any factory-installed dehumidification option.

L terminal is *24 volt alarm active output*.

Unit Shutdown Feature (Standard on All Models)

The RT terminal is the 24VAC transformer output, and the R terminal is the 24VAC hot terminal for the operation of the equipment. RT and R are connected with a brass jumper bar which can be removed and RT and R connected to an external NC (normally closed) contact such as a fire/smoke detector that will cause shutdown of the equipment upon activation.

Balanced Climate™ Feature (Standard on All Models)

All units are equipped with the capability of running in Balanced Climate mode. This mode is designed to enhance the comfort level by reducing the indoor airflow amount and extending the run time to help extract more humidity during cooling operation. In heating mode, the reduced airflow provides a warmer supply air temperature creating more comfortable heat. The Y1 terminal is the 24VAC input for Balanced Climate compressor cooling operation. The Y2 terminal is the 24VAC input for compressor cooling standard operation. Y1 and Y2 are connected with a brass jumper bar which can be removed to enable Balanced Climate mode. Units with an economizer will not have the brass jumper installed. Refer to vent manuals for instructions on how Balanced Climate works with each vent.

To operate in Balanced Climate mode, a 2-stage heat pump thermostat is required. The lower indoor airflow operation is overridden by utilizing a 2-stage thermostat. If the call for cooling is not satisfied within a given time frame or temperature differential (specified by the thermostat), the thermostat will send a signal to Y2 which then increases the blower speed back to the selected speed. See pages 36 and 37 for blower speed selection options.

Refer to page 25 for additional Balanced Climate requirements and limitations.

Low Ambient Control (LAC)

The low ambient control is a pressure switch that is attached to the liquid line of the system and monitors high side system pressure. Operation of the LAC occurs as outdoor temperatures drop below 60ºF. LAC operation cycles the condenser fan on/off based on outdoor temperature.

Outdoor Temperature Switch and Freeze Protection Thermostat

An outdoor temperature switch and an evaporator freeze protection thermostat is supplied with all units that have a low ambient control. The outdoor switch disables Balanced Climate mode (if enabled) when the temperature drops below 50ºF. This prevents potential evaporator coil freeze up issues. The freeze thermostat cuts out compressor operation if the evaporator begins to freeze up.

TABLE 3
Wall Thermostats

Part Number	Predominate Features
8403-060 (1120-445)	3 stage Cool; 3 stage Heat; Electronic Programmable/Non-Programmable; HP or Conventional; Auto or Manual changeover; Dehumidification Output
8403-095 (T4 Pro)	1 stage Cool, 2 stage Heat – Heat Pump; 1 stage Cool, 1 stage Heat – Conventional; Programmable/Non-Programmable Electronic; Auto or Manual changeover
8403-090 (T6 Pro)	2 stage Cool, 3 stage Heat – Heat Pump; 2 stage Cool, 2 stage Heat – Conventional; Programmable/Non-Programmable Electronic; Auto or Manual changeover
8403-092 (T6 Pro Wi-Fi)	2 stage Cool, 3 stage Heat – Heat Pump; 2 stage Cool, 2 stage Heat – Conventional; Programmable/Non-Programmable Electronic; Auto or Manual changeover; Wi-Fi
CS9B-THOA	3 stage Cool, 3 stage Heat; Programmable/Non-Programmable; HP or Conventional; Auto or Manual Changeover; Humidity Sensor w/ dehumidification; Motion Sensor w/Intelligent Learning Control; BACnet-compatible
CS9B-THOCA	3 stage Cool, 3 stage Heat; Programmable/Non-Programmable; HP or Conventional; Auto or Manual Changeover; Humidity Sensor w/ dehumidification; CO_2 Sensor; Motion Sensor w/Intelligent Learning Control; BACnet-compatible
CS9BE-THOA	3 stage Cool, 3 stage Heat; Programmable/Non-Programmable; HP or Conventional; Auto or Manual Changeover; Humidity Sensor w/ dehumidification; Motion Sensor w/Intelligent Learning Control; BACnet-compatible; Ethernet-compatible
CS9BE-THOCA	3 stage Cool, 3 stage Heat; Programmable/Non-Programmable; HP or Conventional; Auto or Manual Changeover; Humidity Sensor w/dehumidification; CO_2 Sensor; Motion Sensor w/Intelligent Learning Control; BACnet-compatible; Ethernet-compatible

TABLE 4
Humidity Controls

Part Number	Predominate Features
8403-038 (H600A1014)	SPDT switching, pilot duty 50VA @ 24V; Humidity range 20-80% RH
8403-047 (H200-10-21-10)	Electronic dehumidistat SPST closes-on-rise; Humidity range 10-90% with adjustable stops

TABLE 5
CO_2 Controllers

Part Number	Predominate Features
8403-067	Normally Open SPST relay closes-on-rise 24V dual wave length sensor. Default setting 950ppm, adjustable to 0-2000ppm Default off setting 1000ppm, adjustable to 0-200 ppm can be calibrated

TABLE 6
Thermostat Wire Size

Transformer VA	FLA	Wire Gauge	Maximum Distance In Feet
55	2.3	18 gauge 16 gauge 14 gauge 12 gauge	60 100 160 250

FIGURE 19
Programmable Thermostat Connections

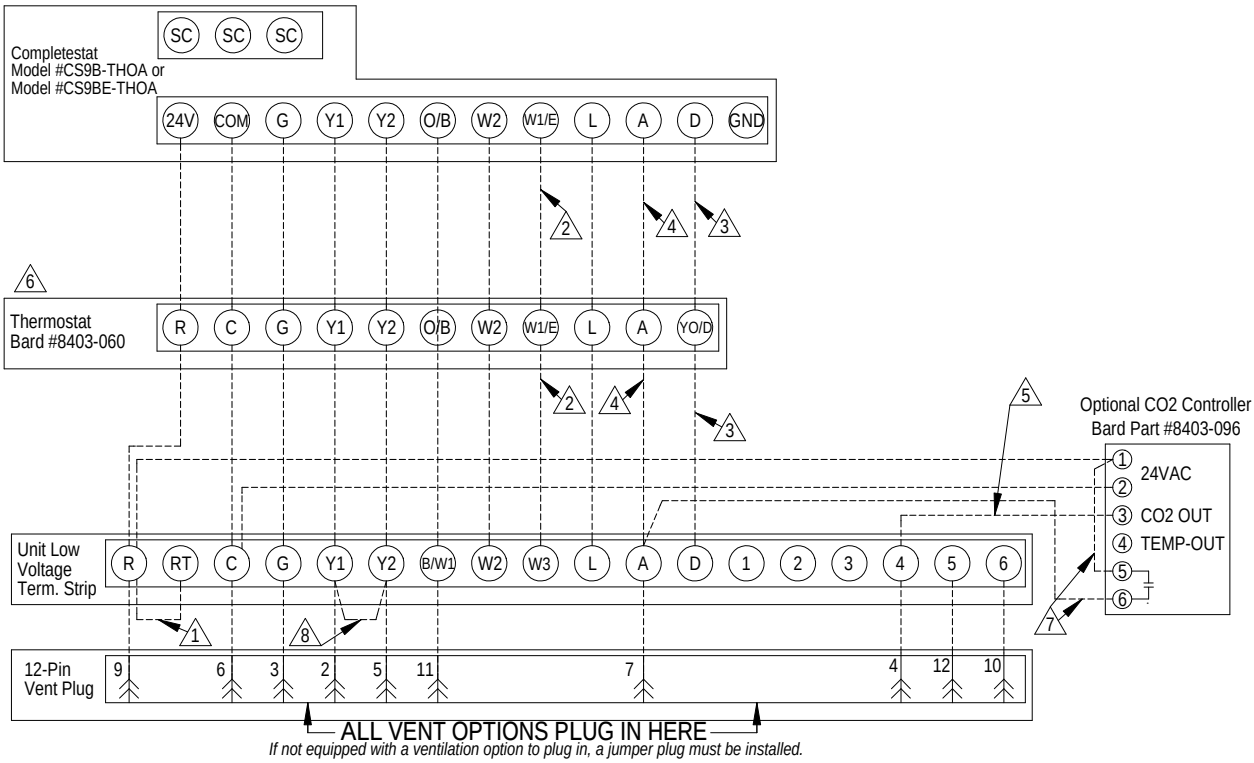

If not equipped with a ventilation option to plug in, a jumper plug must be installed.

1. Factory installed jumper. Remove jumper and connect to N.C fire alarm circuit if emergency shutdown required.
2. Wire not needed below 15KW.
3. Wire required for dehumidification models only.
4. Do not connect "A" from thermostat if optional CO2 controller is used
5. 0-10 VDC modulating C02 control signal for modulating ventilation control (optional for ECON only - see vent instruction manuals)
6. Ensure model configuration is heat pump and not heat/cool. Must be configured to programmable and fan set to be programmed fan for the "A" output to function during scheduled occupied periods. Must be configured for multi-stage for Y1 output to be active 1st stage cooling. For dehumidification, must be configured for "No Economizer" for YO/D to be active for humidity control.
7. Do not add these wires if setting up for modulating control.
8. Factory installed jumper. Remove jumper to activate Balanced Climate TM Mode. A 2-stage thermostat is recommended for balanced climate mode. Y1 Y2 jumper not present if economizer is factory installed. Units with economizers have balanced climate jumper in economizer, refer to economizer manual.

MIS-4063 E

FIGURE 20
Non-Programmable Thermostat Connections

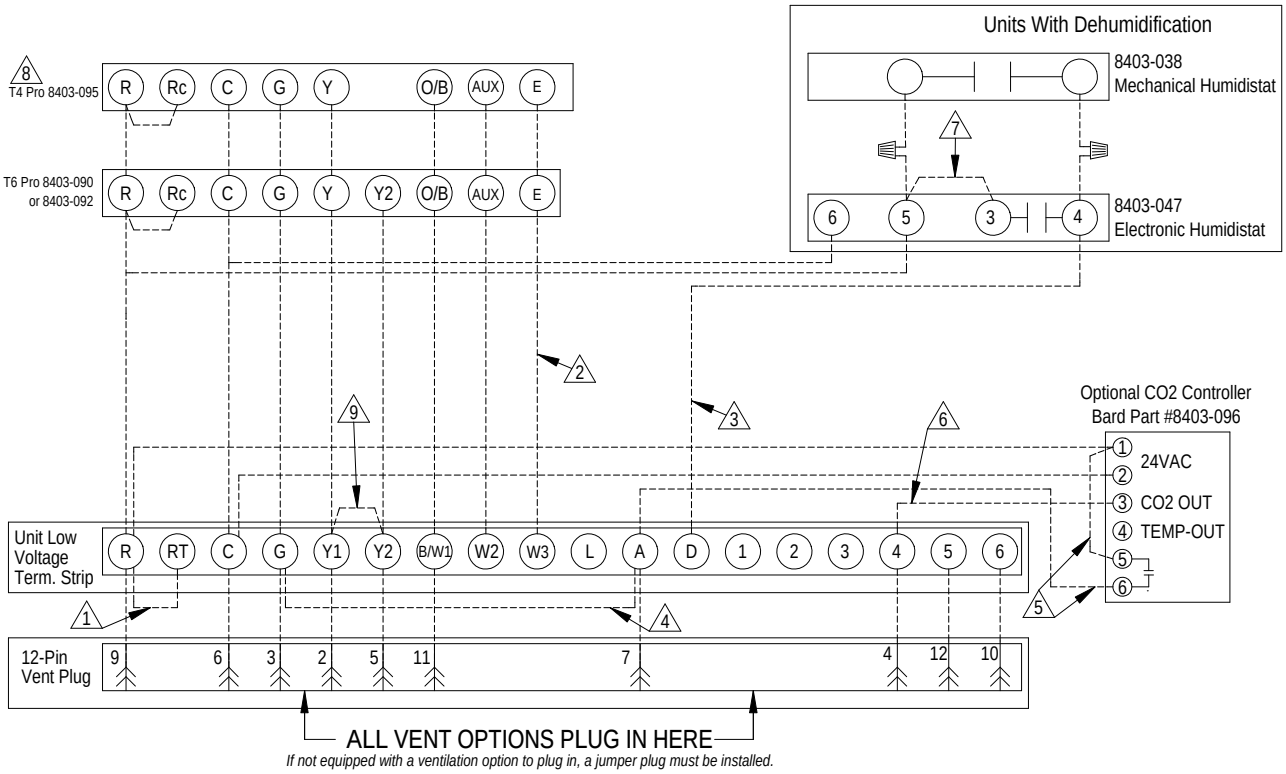

1. Factory installed jumper. Remove jumper and connect to N.C fire alarm circuit if emergency shutdown required.
2. Wire not needed below 15KW.
3. Wire required for dehumidification models only.
4. For vent operation, add jumper if optional CO2 controller is not used. Vent will run while blower is energized. For ECON & CRV-V, an additional wire change is required. See install manual
5. Do not add these wires if setting up for modulating control. See note 6.
6. 0-10 VDC Modulating CO2 control signal for modulating ventilation control (Optional for ECON Only) - See vent installation manual.
7. Jumper needs added.
8. Thermostat will not work with units equipped with economizers.
9. Factory installed jumper. Remove jumper to activate Balanced Climate™ Mode. A 2-stage thermostat is recommended for Balanced Climate mode. Y1 Y2 jumper not present if economizer is factory installed. Units with economizers have balanced climate jumper in economizer, refer to economizer manual.

MIS-4064 F

NOTICE

These units require R-410A refrigerant and polyol ester oil.

General

1. Use separate service equipment to avoid cross contamination of oil and refrigerants.
2. Use recovery equipment rated for R-410A refrigerant.
3. Use manifold gauges rated for R-410A (800 psi/250 psi low).
4. R-410A is a binary blend of HFC-32 and HFC-125.
5. R-410A is nearly azeotropic—similar to R-22 and R-12. Although nearly azeotropic, charge with liquid refrigerant.
6. R-410A operates at 40-70% higher pressure than R-22 and systems designed for R-22 cannot withstand this higher pressure.
7. R-410A has an ozone depletion potential of zero, but must be reclaimed due to its global warming potential.
8. R-410A compressors use polyol ester oil.
9. Polyol ester oil is hygroscopic; it will rapidly absorb moisture and strongly hold this moisture in the oil.
10. A liquid line dryer must be used—even a deep vacuum will not separate moisture from the oil.
11. Limit atmospheric exposure to 15 minutes.
12. If compressor removal is necessary, always plug compressor immediately after removal. Purge with small amount of nitrogen when inserting plugs.

Topping Off System Charge

If a leak has occurred in the system, Bard Manufacturing recommends reclaiming, evacuating (see criteria above) and charging to the nameplate charge. If done correctly, topping off the system charge can be done without problems.

With R-410A, there are no significant changes in the refrigerant composition during multiple leaks and recharges. R-410A refrigerant is close to being an azeotropic blend (it behaves like a pure compound or single component refrigerant). The remaining refrigerant charge, in the system, may be used after leaks have occurred and then "top-off" the charge by utilizing the pressure charts on the inner control panel cover as a guideline.

REMEMBER: *When adding R-410A refrigerant, it must come out of the charging cylinder/tank as a liquid to avoid any fractionation, and to ensure optimal system performance. Refer to instructions for the cylinder that is being utilized for proper method of liquid extraction.*

Safety Practices

1. Never mix R-410A with other refrigerants.
2. Use gloves and safety glasses. Polyol ester oils can be irritating to the skin, and liquid refrigerant will freeze the skin.
3. Never use air and R-410A to leak check; the mixture may become flammable.
4. Do not inhale R-410A—the vapor attacks the nervous system, creating dizziness, loss of coordination and slurred speech. Cardiac irregularities, unconsciousness and ultimate death can result from breathing this concentration.
5. Do not burn R-410A. This decomposition produces hazardous vapors. Evacuate the area if exposed.
6. Use only cylinders rated DOT4BA/4BW 400.
7. Never fill cylinders over 80% of total capacity.
8. Store cylinders in a cool area, out of direct sunlight.
9. Never heat cylinders above 125°F.
10. Never trap liquid R-410A in manifold sets, gauge lines or cylinders. R-410A expands significantly at warmer temperatures. Once a cylinder or line is full of liquid, any further rise in temperature will cause it to burst.

Important Installer Note

For improved start up performance, wash the indoor coil with a dishwashing detergent.

High Pressure Switch

All J**HC wall-mounted heat pump series models are supplied with a remote reset for the high and low pressure switch. If tripped, the pressure switch may be reset by turning the thermostat off then back on again. High pressure switch settings: Opens 650 +/– 15 PSI, Closes 520 +/– 15 PSI.

Three Phase Scroll Compresser Start Up Information

Scroll compressors, like several other types of compressors, will only compress in one rotational direction. Direction of rotation is not an issue with single phase compressors since they will always start and run in the proper direction.

However, three phase compressors will rotate in either direction depending upon phasing of the power. Since there is a 50-50 chance of connecting power in such a way as to cause rotation in the reverse direction, verification of proper rotation must be made. Verification of proper rotation direction is made by observing that suction pressure drops and discharge pressure rises when the compressor is energized. Reverse rotation also results in an elevated sound level over that with correct rotation, as well as substantially reduced current draw compared to tabulated values.

Verification of ***proper rotation*** must be made at the time the equipment is put into service. If improper rotation is corrected at this time, there will be no negative impact on the durability of the compressor. However, reverse operation for over 1 hour may have a negative impact on the bearing due to oil pump out.

NOTE: *If compressor is allowed to run in reverse rotation for an extended period of time, the compressor's internal protector will trip.*

All three phase compressors are wired identically internally. As a result, once the correct phasing is determined for a specific system or installation, connecting properly phased power leads to the same Fusite terminal should maintain proper rotation direction.

The direction of rotation of the compressor may be changed by reversing any two line connections to the unit.

Phase Monitor

All units with three phase scroll compressors are equipped with a three phase line monitor to prevent compressor damage due to phase reversal.

The phase monitor in this unit is equipped with two LEDs. If the Y signal (call for cooling) is present at the phase monitor and phases are correct, the green LED will light.

NOTE: *The phase monitor will not show phase reversal until the compressor is energized during a call for cooling or heat pump operation.*

If phases are reversed, the red fault LED will be lit and compressor operation is inhibited.

If a fault condition occurs, reverse two of the supply leads to the unit. ***Do not reverse any of the unit factory wires as damage may occur.***

Condenser Fan Operation

NOTE: *Certain models may be equipped with a low ambient control (LAC), and if so, the condenser fan motor will have a delayed start until system refrigerant operating pressure builds up. After starting, the fan motor may or may not cycle depending upon ambient conditions. This is normal operation.*

Service Hints

1. Caution owner/operator to maintain clean air filters at all times and also not to needlessly close off supply and return air registers. This reduces airflow through the system, which shortens equipment service life as well as increasing operating costs.
2. Check all power fuses or circuit breakers to be sure they are the correct rating.
3. Periodic cleaning of the outdoor coil to permit full and unrestricted airflow circulation is essential.

Sequence of Operation

Cooling

Circuit R-Y1 makes at thermostat pulling in compressor contactor, starting the compressor and outdoor motor. (See ***NOTE*** under **Condenser Fan Operation** concerning models equipped with low ambient control.) The G (indoor motor) circuit is automatically completed by the thermostat on any call for cooling operation or can be energized by manual fan switch on subbase for constant air circulation. On a call for 2nd stage heating, circuit R-W2 makes at the thermostat pulling in heat contactor for the strip heat and blower operation. On a call for third stage heat, R-W3 makes bringing on second heat contactor, if so equipped.

Heating

A 24V solenoid coil on reversing valve controls heating cycle operation. Two thermostat options, one allowing "Auto" changeover from cycle to cycle and the other constantly energizing solenoid coil during heating season—thus eliminating pressure equalization noise except during defrost, are to be used.

On "Auto" option, a circuit is completed from R-B/W1 and R-Y1 on each heating "on" cycle, energizing reversing valve solenoid and pulling in compressor contactor, starting compressor and outdoor motor. R-G also make starting indoor blower motor. Heat pump heating cycle now in operation.

The second option has no "Auto" changeover position, but instead energizes the reversing valve solenoid constantly whenever the system switch on subbase is placed in "Heat" position, the "B" terminal being constantly energized from R. A thermostat demand for heat completes R-Y1 circuit, pulling in compressor contactor starting compressor and outdoor motor. R-G also make starting indoor blower motor.

On a call for 2nd stage heating, circuit R-W2 makes at the thermostat pulling in the heat contactor for the strip heat and blower operation. On a call for third stage heat, R-B/W1 breaks, dropping out heat pump, and R-W3 makes, bringing on second heat contactor, if so equipped.

Balanced Climate™ Mode

Balanced Climate™ is a great comfort feature that can easily be applied under any normal circumstances. If the Bard air conditioning system is being set up in a typical environment where 72°F is the lowest cooling setpoint, remove the Y1/Y2 jumper and install a 2-stage cooling thermostat. This will increase the humidity removal up to 35% and provide a much more comfortable environment. This mode will also increase the supply temperature when in heating mode. When Balanced Climate mode is activated, it is employed in both heating and cooling modes.

If the application is likely to require air conditioning operation below 60°F outdoor conditions, a low ambient control (LAC) kit must be installed. The LAC kit is equipped with an outdoor temperature switch that disables Balanced Climate mode when the outdoor temperature drops below 50°F. This prevents potential evaporator coil freeze up issues. The LAC kit also comes with an evaporator freeze protection thermostat that cuts out the compressor if the evaporator begins to freeze up.

If the unit is being installed with any ventilation package, a Bard LAC kit must be installed. Failure to utilize an LAC with any heat pump can cause coil freeze up.

Balanced Climate can readily be applied to duct-free (supply and return air grille) applications. It may also be applied to ducted applications with **limited static of 0.20" ESP (total including both supply and return statics)**. Consult Bard Application Engineering for details prior to implementation.

CAUTION: *Balanced Climate is not a replacement for a dehumidification (hot gas reheat) unit for extreme applications, but rather an enhancement feature for limited climates and applications.*

Defrost Cycle

The defrost cycle is controlled by temperature and time on the solid state heat pump control.

When the outdoor temperature is in the lower 40°F temperature range or colder, the outdoor coil temperature is 32°F or below. This coil temperature is sensed by the coil temperature sensor mounted near the bottom of the outdoor coil. Once coil temperature reaches 30°F or below, the coil temperature sensor sends a signal to the control logic of the heat pump control and the defrost timer will start accumulating run time.

After 30, 60 or 90 minutes of heat pump operation at 30°F or below, the heat pump control will place the system in the defrost mode.

During the defrost mode, the refrigerant cycle switches back to the cooling cycle, the outdoor motor stops, electric heaters are energized and hot gas passing through the outdoor coil melts any accumulated frost. When the temperature rises to approximately 57°F, the coil temperature sensor will send a signal to the heat pump control which will return the system to heating operations automatically.

If some abnormal or temporary condition such as a high wind causes the heat pump to have a prolonged defrost cycle, the heat pump control will restore the system to heating operation automatically after 8 minutes.

The heat pump defrost control board has an option of 30-, 60- or 90-minute setting. By default, this unit is shipped from the factory with the defrost time on the 60-minute pin. If circumstances require a change to another time, remove the jumper pin from the 60-minute terminal and reconnect to the desired terminal. Refer to Figure 21 on page 26.

There is a cycle speed up jumper on the control. This can be used for testing purposes to reduce the time between defrost cycle operation without waiting for time to elapse.

Use a small screwdriver or other metallic object, or another 1/4" QC, to short between the *SPEEDUP* terminals to accelerate the HPC timer and initiate defrost.

Be careful not to touch any other terminals with the instrument used to short the *SPEEDUP* terminals. It may take up to 10 seconds with the *SPEEDUP* terminals shorted for the speedup to be completed and the defrost cycle to start.

As soon as the defrost cycle kicks in, remove the shorting instrument from the SPEEDUP terminals. Otherwise the timing will remain accelerated and run through the 1-minute minimum defrost length sequence in a matter of seconds and will automatically terminate the defrost sequence.

There is an initiate defrost jumper (sen jump) on the control that can be used at any outdoor ambient during the heating cycle to simulate a 0°F coil temperature.

This can be used to check defrost operation of the unit without waiting for the outdoor ambient to fall into the defrost region.

By placing a jumper across the *SEN JMP* terminals (a 1/4" QC terminal works best) the defrost sensor mounted on the outdoor coil is shunted out and will activate the timing circuit. This permits the defrost cycle to be checked out in warmer weather conditions without the outdoor temperature having to fall into the defrost region.

In order to terminate the defrost test, the *SEN JMP* jumper must be removed. If left in place too long, the compressor could stop due to the high pressure control opening because of high pressure condition created by operating in the cooling mode with outdoor fan off. Pressure will rise fairly fast as there is likely no actual frost on the outdoor coil in this artificial test condition.

There is also a 5-minute compressor time delay function built into the HPC. This is to protect the compressor from short cycling conditions. The board's LED will have a fast blink rate when in the compressor time delay. In some instances, it is helpful to the service technician to override or speed up this timing period and shorting out the *SPEEDUP* terminals for a few seconds can do this.

Low Pressure Switch Bypass Operation

The control has a selectable (SW1) low pressure switch bypass set up to ignore the low pressure switch input during the first (30, 60, 120 or 180 seconds) of "Y" operation.

After this period expires, the control will then monitor the low pressure switch input normally to make sure that the switch is closed during "Y" operation.

FIGURE 21
Defrost Control Board

SW 1	SW 2	TIME (SEC)
OFF	OFF	30
ON	OFF	60
OFF	ON	120*
ON	ON	180

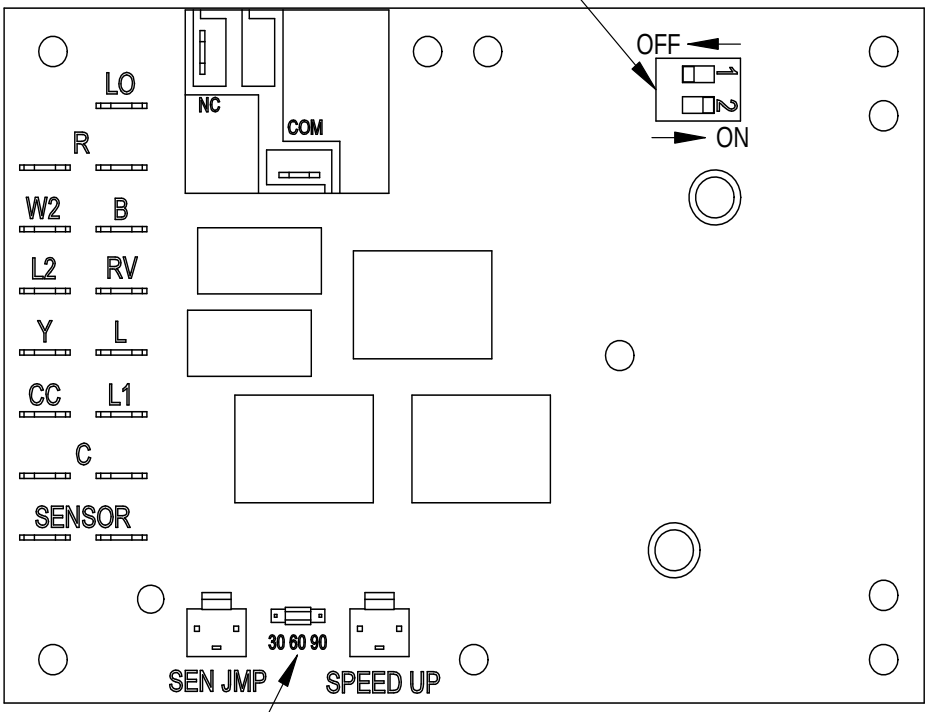

Model	Setting
J42HC	60
J48HC	60
J60HC	60

MIS-2668 A

High Pressure Switch Operation

The control has a built-in lockout system that allows the unit to have the high pressure switch trip up to two times in 1 hour and only encounter a “soft” lockout. A “soft” lockout shuts the compressor off and waits for the pressure switch to reset, which at that point then allows the compressor to be restarted as long as the 5-minute short cycle timer has run out. If the high pressure switch trips a third time within 1 hour, the unit is in “hard” lockout indicating something is certainly wrong and it will not restart itself.

Vent Connection Plug

All units are equipped with a vent connection plug in the side of the control panel for the different ventilation packages to plug in to. If the compressor will not start and there is no "Y1" at the compressor control module, first check to make sure that either the optional vent is plugged into the vent connection plug or the supplied jumper plug is in place. **The unit will not operate without anything plugged in.** This plug is located on the side of the control panel behind the front vent door (behind the filter access door). If the unit is supplied with a factory-installed vent package, it will be plugged in but the jumper plug will also be tethered next to the connection for troubleshooting purposes, if necessary.

Pressure Service Ports

High and low pressure service ports are installed on all units so that the system operating pressures can be observed. Pressure tables covering all models can be found on pages 33 and 34. It is imperative to match the correct pressure table to the unit by model number.

This unit employs high-flow Coremax valves instead of the typical Shrader type valves.

WARNING! Do NOT use a Schrader valve core removal tool with these valves. Use of such a tool could result in eye injuries or refrigerant burns!

To change a Coremax valve without first removing the refrigerant, a special tool is required which can be obtained at www.fastestinc.com/en/SCCA07H. See the replacement parts manual for replacement core part numbers.

Solid State Heat Pump Control Troubleshooting Procedure

1. ***NOTE:*** *A thorough understanding of the defrost cycle sequence is essential. Review that section (pages 25 and 26) prior to troubleshooting the control.*
   Turn on AC power supply to unit.
2. Turn thermostat blower switch to "fan on"—the indoor blower should start. (If it doesn't, troubleshoot indoor unit and correct problem.)
3. Turn thermostat blower to "auto" position. Indoor blower should stop. ***NOTE:*** *Many models have a 1-minute blower time delay on "off" command; wait for this to time out.*
4. Set system switch to "heat" or "cool". Adjust thermostat to call for heat or cool. The indoor blower, compressor and outdoor fan should start.

NOTE: *If there was no power to 24 volt transformer, the compressor and outdoor fan motor will not start for 5 minutes. This is because of the compressor short cycle protection.*

LED BLINK CODES	
BLINK	**FUNCTION**
Slow	Normal function (1.0 sec on/1.0 sec off)
Fast	Compressor Delay timer active (0.1 sec on/0.1 sec off)
1	Low pressure switch failure
2	High pressure switch failure/"Soft" Lockout
3	Defrost mode active
4	High pressure switch failure/"Hard" Lockout

TABLE 7 – Troubleshooting

Sympton	Description, Check and Possible Causes	What & How to Check / Repair
Compressor will not start (heating or cooling)	**1. Check for LED illumination.** Is there an LED illuminated on the board (flashing)?	Yes = go to Step #2; No = go to Step #3
	2. Check for error codes. Is the LED flashing a Code?	Yes = go to Step #4; No = go to Step #8
	3. Check for power at board. Is there 24 volts AC between R and C?	Yes = go to Step #13; No = go to Step #9
	4. Check codes. What code is blinking?	Code "1", go to Step #6; Code "2", go to Step#7; Fast Blink, go to Step #5
	5. Compressor delay active. Wait for 5 minute delay or jump board's "speed up pins".	Check for proper operation; if still needed, go back to Step #1.
	6. Low pressure fault.	Check wiring circuit and unit pressures.
	7. High pressure fault.	Check wiring circuit and unit pressures.
	8. Check for Compressor input signal. Is there 24 volts AC between Y and C?	Yes = go to Step #10; No = go to Step #11
	9. No power to board.	The unit either does not have unit voltage, the transformer is bad or the unit wiring is incorrect.
	10. Check for Compressor output signal. Is there 24 volts AC between CC & C?	Yes = go to Step #12; No = go to Step #13
	11. No "Y" compressor input signal.	Check thermostat wiring, incorrect phase of unit (see section on Phase Monitor), and finally unit wiring.
	12. No "CC" compressor output signal.	Check compressor contactor for proper operation and finally check compressor.
	13. Faulty board.	Replace defrost board.
Fan outdoor motor does not run (cooling or heating except during defrost)	Heat pump control defective	Check across fan relay on heat pump control. (Com-NC) Replace heat pump control.
	Motor defective	Check for open or shorted motor winding. Replace motor.
	Motor capacitor defective	Check capacitor rating. Check for open or shorted capacitor. Replace capacitor.
Reversing valve does not energize (heating only)	Heat pump control defective	Check for 24V between RV-C and B-C. 1. Check control circuit wiring. 2. Replace heat pump control.
	Reversing valve solenoid coil defective	Check for open or shorted coil. Replace solenoid coil.
Unit will not go into defrost (heating only)	Temperature sensor or heat pump control defective	Disconnect temperature sensor from board and jumper across "SPEEDUP" terminals and "SEN JMP" terminals. This should cause the unit to go through a defrost cycle within one minute. 1. If unit goes through defrost cycle, replace temperature sensor. 2. If unit does not go through defrost cycle, replace heat pump control.
Unit will not come out of defrost (heating only)	Temperature sensor or heat pump control defective	Jumper across "SPEEDUP" terminal. This should cause the unit to come out of defrost within one minute. 1. If unit comes out of defrost cycle, replace temperature sensor. 2. If unit does not come out of defrost cycle, replace heat pump control.

Checking Temperature Sensor Outside Unit Circuit

1. Disconnect temperature sensor from board and from outdoor coil.
2. Use an ohmmeter to measure the resistance of the sensor. Also use ohmmeter to check for short or open.
3. Check resistance reading to chart of resistance. Use sensor ambient temperature. (Tolerance of part is ± 10%.)
4. If sensor resistance reads very low, sensor is shorted and will not allow proper operation of the heat pump control.
5. If sensor is out of tolerance, shorted, open or reads very low ohms, it should be replaced.

TABLE 8
Temperature F vs. Resistance R of Temperature Sensor

F	R	F	R	F	R	F	R
-25.0	196871	13.0	56985	53.0	19374	89.0	7507
-24.0	190099	14.0	55284	52.0	18867	90.0	7334
-23.0	183585	15.0	53640	53.0	18375	91.0	7165
-22.0	177318	16.0	52051	54.0	17989	92.0	7000
-21.0	171289	17.0	50514	55.0	17434	93.0	6840
-20.0	165487	18.0	49028	56.0	16984	94.0	6683
-19.0	159904	19.0	47590	57.0	16547	95.0	6531
-18.0	154529	20.0	46200	58.0	16122	96.0	6383
-17.0	149355	21.0	44855	59.0	15710	97.0	6239
-16.0	144374	22.0	43554	60.0	15310	98.0	6098
-15.0	139576	23.0	42295	61.0	14921	99.0	5961
-14.0	134956	24.0	41077	62.0	14544	100.0	5827
-13.0	130506	25.0	39898	63.0	14177	101.0	5697
-12.0	126219	26.0	38757	64.0	13820	102.0	5570
-11.0	122089	27.0	37652	65.0	13474	103.0	5446
-10.0	118108	28.0	36583	66.0	13137	104.0	5326
-9.0	114272	29.0	35548	67.0	12810	105.0	5208
-8.0	110575	30.0	34545	68.0	12492	106.0	5094
-7.0	107010	31.0	33574	69.0	12183	107.0	4982
-6.0	103574	32.0	32634	70.0	11883	108.0	4873
-5.0	100260	33.0	31723	71.0	11591	109.0	4767
-4.0	97064	34.0	30840	72.0	11307	110.0	4663
-3.0	93981	35.0	29986	73.0	11031	111.0	4562
-2.0	91008	36.0	29157	74.0	10762	112.0	4464
-1.0	88139	37.0	28355	75.0	10501	113.0	4367
0.0	85371	38.0	27577	76.0	10247	114.0	4274
1.0	82699	39.0	26823	77.0	10000	115.0	4182
2.0	80121	40.0	26092	78.0	9760	116.0	4093
3.0	77632	41.0	25383	79.0	9526	117.0	4006
4.0	75230	42.0	24696	80.0	9299	118.0	3921
5.0	72910	43.0	24030	81.0	9077	119.0	3838
6.0	70670	44.0	23384	82.0	8862	120.0	3757
7.0	68507	45.0	22758	83.0	8653	121.0	3678
8.0	66418	46.0	22150	84.0	8449	122.0	3601
9.0	64399	47.0	21561	85.0	8250	123.0	3526
10.0	62449	48.0	20989	86.0	8057	124.0	3452
11.0	60565	49.0	20435	87.0	7869		
12.0	58745	50.0	19896	88.0	7686		

Troubleshooting NIDEC SELECTECH Series ECM Motors

If the Motor Is Running

1. It is normal for the motor to rock back and forth on start up. Do not replace the motor if this is the only problem identified.
2. If the system is excessively noisy, does not appear to change speeds in response to a demand (Heat, Cool, Other) or is having symptoms during the cycle such as tripping limit or freezing coil, check the following:
   A. Wait for programmed delays to time out.
   B. Ensure that the motors control inputs are wired as shown in the factory-supplied wiring diagram to ensure motor is getting proper control signals and sequencing.
   C. Remove the filter and check that all dampers, registers and grilles are open and free flowing. If removing the filters corrects the problem, clean or replace with a less restrictive filter. Also check and clean the blower wheel or coil as necessary.
   D. Check the external static pressure (total of both supply and return) to ensure it is within the range as listed on the unit serial plate. If higher than allowed, additional duct work is needed.
   E. If the motor does not shut off at the end of the cycle, wait for any programmed delays to time out (no more than 90 seconds). Also make sure that there is no call for "Continuous Fan" on the "G" terminal.
   F. If the above diagnostics do not solve the problem, confirm the voltage checks in the next section below, then continue with the "Model SelecTech Communication Diagnostics".

If the Motor Is Not Running

1. Check for proper high voltage and ground at the (L/L1) (G) (N/L2) connections at the motor (see Figure 22). Correct any voltage issues before proceeding to the next step. The SelecTech motor is voltage specific. Only the correct voltage should be applied to the proper motor. Input voltage within plus or minus 10% of the nominal line power VAC is acceptable.
2. If the motor has proper high voltage and ground at the (L/L1) (G) (N/L2) connections, then continue to "Model SelecTech Communication Diagnostics".

FIGURE 22
Motor Connections

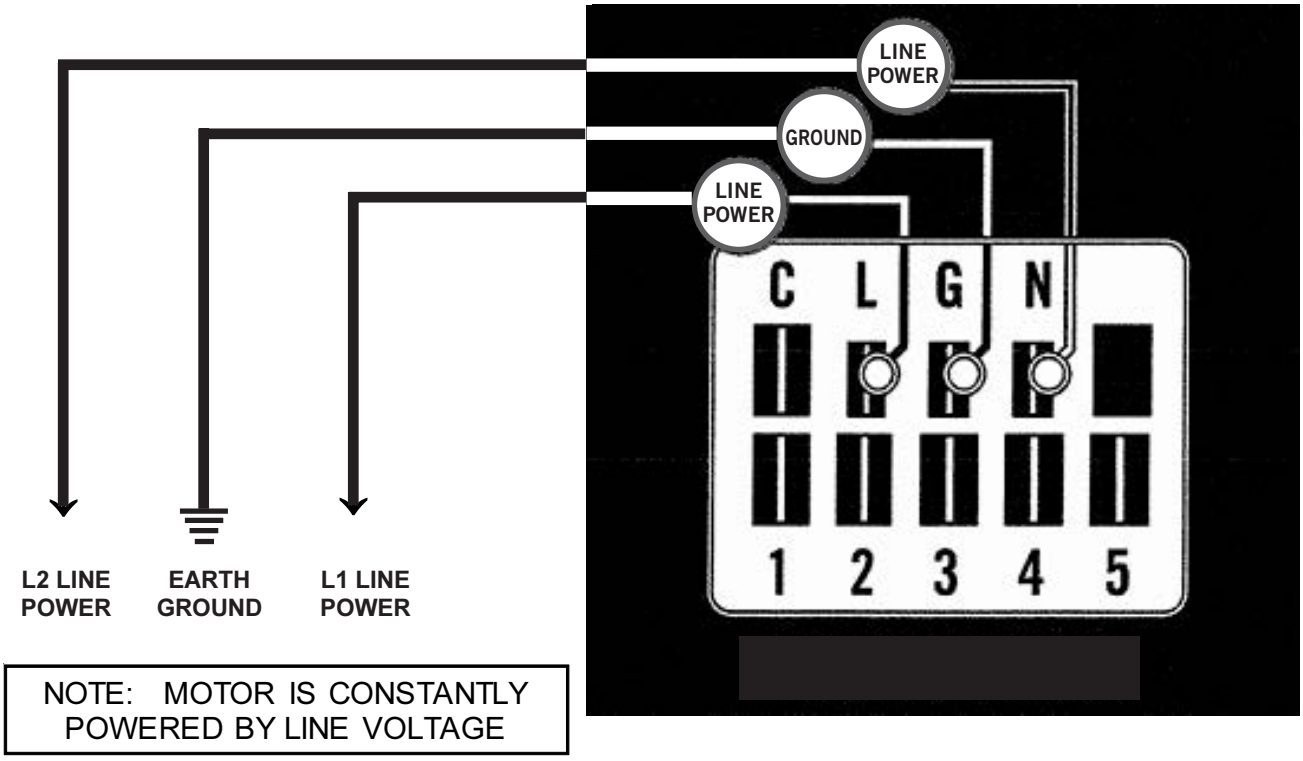

Model SelecTech Communication Diagnostics

The SelecTech motor is communicated through 24VAC low voltage (thermostat control circuit wiring).

1. Start with unit wiring diagram to confirm proper connections and voltage (see Figure 23).
2. Initiate a demand from the thermostat and check the voltage between the common and the appropriate motor terminal (1-5). ("G" input is typically on terminal #1, but always refer to wiring diagram.)
   A. If the low voltage communication is not present, check the demand from the thermostat. Also check the output terminal and wire(s) from the terminal strip or control relay(s) to the motor.
   B. If the motor has proper high voltage as identified above (**If the Motor Is Not Running** #1), proper low voltage to a programmed terminal and is not operating, the motor has failed and will require replacement.

FIGURE 23
Motor Connections

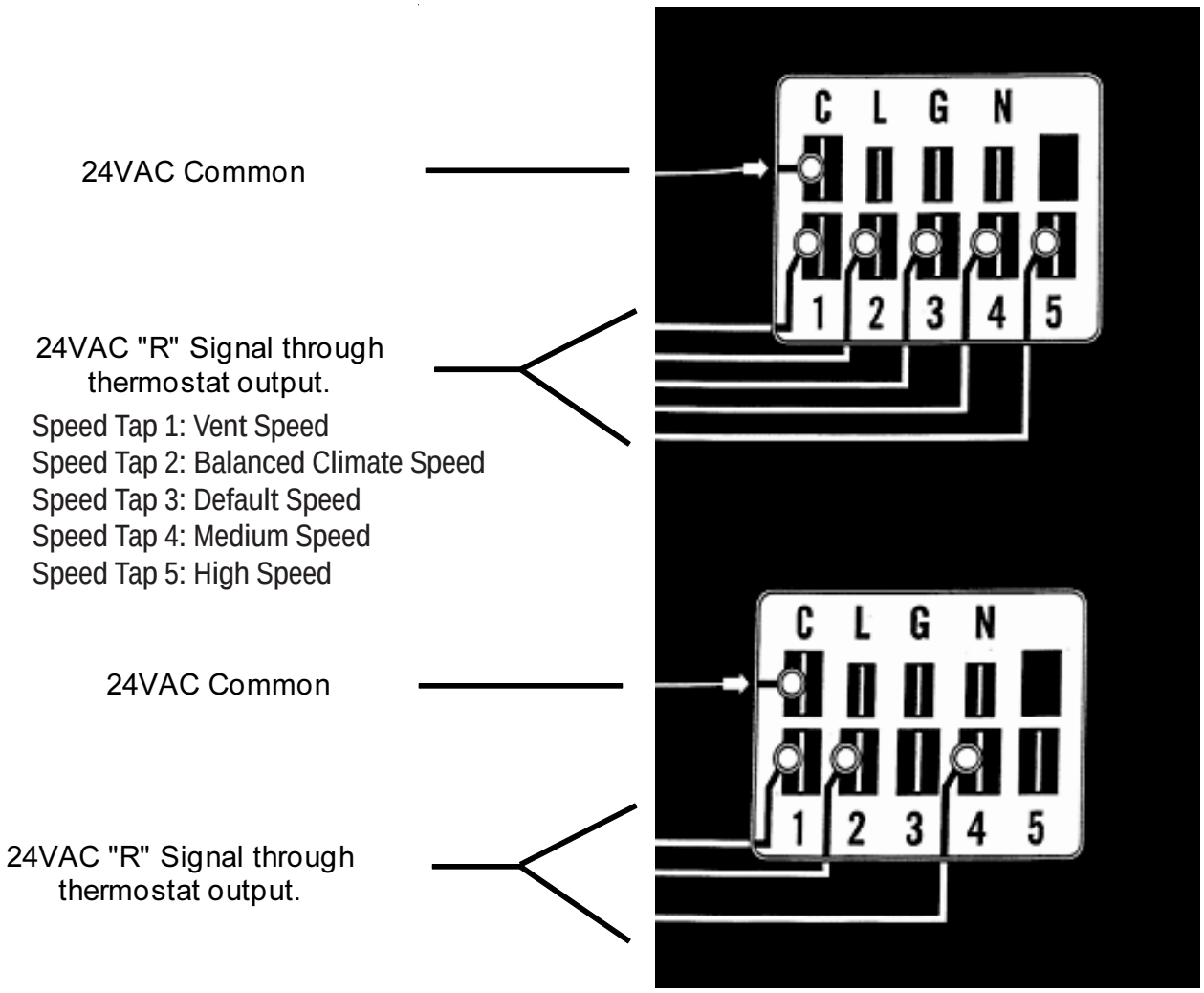

Fan Blade Setting Dimensions

Shown in Figure 24 is the correct fan blade setting for proper air delivery across the outdoor coil. Refer to Table 10 for unit specific dimension.

Any service work requiring removal or adjustment in the fan and/or motor area will require that the dimensions below be checked and blade adjusted in or out on the motor shaft accordingly.

FIGURE 24
Fan Blade Setting

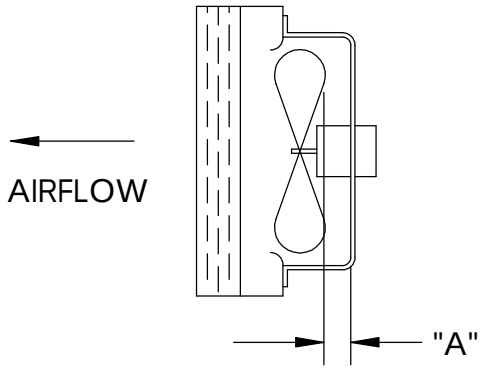

MIS-1724

TABLE 9
Fan Blade Dimensions

Model	Dimension A
J42HC J48HC J60HC	1.5"

R-410A Refrigerant Charge

This unit was charged at the factory with the quantity of refrigerant listed on the serial plate. AHRI capacity and efficiency ratings were determined by testing with this refrigerant charge quantity.

The following pressure tables show nominal pressures for the units. Since many installation specific situations can affect the pressure readings, this information should only be used by certified technicians as a guide for evaluating proper system performance. They shall not be used to adjust charge. If charge is in doubt, reclaim, evacuate and recharge the unit to the serial plate charge.

Removal of Fan Shroud

1. Disconnect all power to the unit before servicing.
2. To access the condenser coil for cleaning or to service the outdoor fan, first remove the side grilles.
3. The fan shroud sides can then be removed for ease of access to the coil and the back side of the shroud by removing the seven (7) screws as shown in Figure 25.
4. The fan or coil can now be serviced.
5. Reverse the steps to reassemble.

FIGURE 25
Fan Shroud Removal

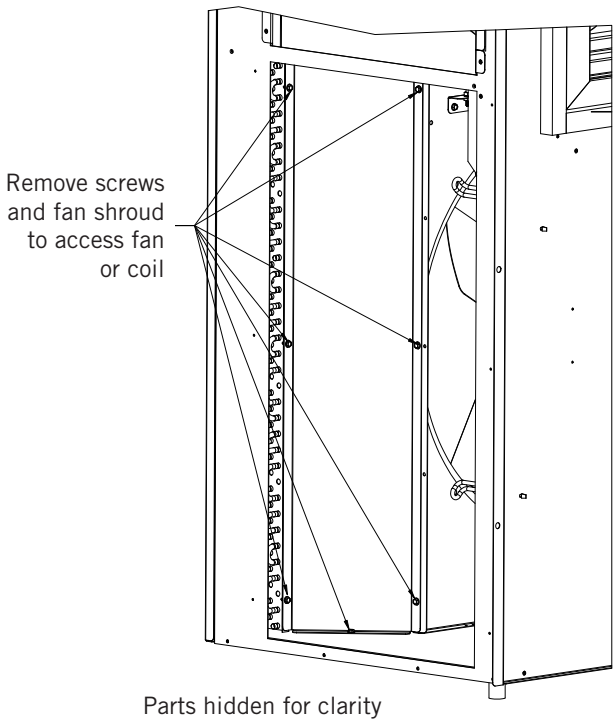

MIS-4045

TABLE 10A
Cooling Pressure – Standard Airflow

Air Temperature Entering Outdoor Coil °F

Model	Return Air Temp (DB/WB)	Pressure	75	80	85	90	95	100	105	110	115	120	125	131
J42HC	75/62	Low Side	122	125	128	130	133	135	137	139	141	143	144	146
		High Side	318	339	361	385	410	436	463	492	521	552	583	623
	80/67	Low Side	131	134	137	139	142	144	147	149	151	153	154	156
		High Side	326	348	371	395	421	447	475	504	534	566	598	639
	85/72	Low Side	136	139	142	144	147	150	152	154	156	158	160	--*
		High Side	337	360	384	409	435	463	492	522	553	585	619	
J48HC	75/62	Low Side	130	132	134	135	137	139	141	142	144	146	148	150
		High Side	322	344	367	391	416	442	468	496	525	554	585	623
	80/67	Low Side	139	141	143	145	147	149	150	152	154	156	158	160
		High Side	330	353	376	401	426	453	480	509	538	569	600	639
	85/72	Low Side	144	146	148	150	152	154	156	158	160	162	163	--*
		High Side	341	365	389	415	441	469	497	527	557	588	621	
J60HC	75/62	Low Side	123	125	127	129	131	133	135	137	139	140	142	144
		High Side	311	337	365	391	418	445	472	499	526	553	579	611
	80/67	Low Side	131	134	136	138	140	142	144	146	148	150	152	154
		High Side	319	346	374	401	429	457	484	512	539	567	594	627
	85/72	Low Side	136	139	141	143	145	147	150	151	153	155	157	--*
		High Side	330	358	387	415	444	473	501	530	558	587	615	

Low side pressure ± 4 PSIG
High side pressure ± 10 PSIG

Tables are based upon rated CFM (airflow) across the evaporator coil. If there is any doubt as to correct operating charge being in the system, the charge should be removed and system evacuated and recharged to serial plate charge weight.

NOTE: *Pressure table based on high speed condenser fan operation. If condensing pressures appear elevated check condenser fan wiring. See* **Condenser Fan Operation** *on page 24.*

** Operating at these conditions would be outside the compressor operating envelope and is not recommended.*

TABLE 10B
Heating Pressure – Standard Airflow

Air Temperature Entering Outdoor Coil °F

Model	Indoor	Heating	0	5	10	15	20	25	30	35	40	45	50	55	60	65
J42HC	70	Low Side	39	44	50	56	62	68	75	82	89	97	105	113	122	131
		High Side	283	287	292	297	304	310	318	326	335	345	355	367	378	391
J48HC	70	Low Side	36	41	46	52	58	64	71	79	86	94	103	111	121	130
		High Side	263	271	279	287	296	304	314	323	333	343	353	364	375	386
J60HC	70	Low Side	32	38	45	51	58	65	72	79	87	94	102	110	118	126
		High Side	297	303	310	317	324	332	339	348	356	365	374	383	393	403

TABLE 11
Cooling Pressure – Balanced Climate Airflow

Air Temperature Entering Outdoor Coil °F

Model	Return Air Temp (DB/WB)	Pressure	75	80	85	90	95	100	105	110	115	120	125	131
J42HC	75/62	Low Side	116	118	121	123	126	128	130	132	134	136	138	140
		High Side	307	331	355	380	406	432	459	487	515	544	574	611
	80/67	Low Side	124	127	129	132	134	137	139	141	143	145	147	150
		High Side	315	339	364	390	416	443	471	499	529	558	589	626
	85/72	Low Side	128	131	134	136	139	141	144	146	148	151	153	--*
		High Side	326	351	377	404	431	459	488	517	547	578	609	
J48HC	75/62	Low Side	122	123	125	127	129	131	133	135	137	139	141	143
		High Side	314	335	358	381	405	431	457	484	513	542	572	610
	80/67	Low Side	130	132	134	136	138	140	142	144	146	148	150	153
		High Side	322	344	367	391	416	442	469	497	526	556	587	625
	85/72	Low Side	134	136	139	141	143	145	147	149	151	153	156	--*
		High Side	333	356	380	405	430	457	485	514	544	575	607	
J60HC	75/62	Low Side	115	118	120	123	125	127	129	131	132	134	135	136
		High Side	307	329	352	376	401	427	454	482	512	542	573	611
	80/67	Low Side	123	126	129	131	134	136	138	140	142	143	144	145
		High Side	314	337	361	386	411	438	466	495	525	555	587	627
	85/72	Low Side	127	130	133	136	139	141	143	145	147	148	149	--*
		High Side	325	349	374	399	426	454	482	512	543	575	608	

Low side pressure ± 4 PSIG
High side pressure ± 10 PSIG

Tables are based upon Balanced Climate CFM (airflow) across the evaporator coil. If there is any doubt as to correct operating charge being in the system, the charge should be removed and system evacuated and recharged to serial plate charge weight.

NOTE: *Pressure table based on high speed condenser fan operation. If condensing pressures appear elevated check condenser fan wiring. See* **Condenser Fan Operation** *on page 24.*

** Operating at these conditions would be outside the compressor operating envelope and is not recommended.*

TABLE 12
Electrical Specifications – J**HC Series

Model	Rated Volts & Phase	No. Field Power Circuits	Single Circuit				Multiple Circuit							
			① Minimum Circuit Ampacity	② Maximum External Fuse or Ckt. Brkr.	③ Field Power Wire Size	③ Ground Wire	① Minimum Circuit Ampacity		② Maximum External Fuse or Ckt. Breaker		③ Field Power Wire Size		③ Ground Wire Size	
							Ckt. A	Ckt. B	Ckt. A	Ckt. B	Ckt. A	Ckt. B	Ckt. A	Ckt. B
J42HC-A00, A0Z	230/208-1	1	32	45	8	10								
A04		1	53	60	6	10								
A05		1	58	60	6	10								
A10		1 or 2	84	90	4	8	32	52	50	60	8	6	10	10
⑤ A15		1 or 2	84	90	4	8	58	26	60	45	6	8	10	10
J42HC-B00, B0Z	230/208-3	1	24	35	8	10								
B05		1	39	45	8	10								
B09		1	51	60	6	10								
④ B15		1	51	60	6	10								
J42HC-C00, C0Z	460-3	1	12	15	14	14								
C05		1	21	25	10	10								
C09		1	25	30	10	10								
④ C15		1	26	30	10	10								
J48HC-A00, A0Z	230/208-1	1	35	50	8	10								
A04		1	56	60	6	10								
A05		1 or 2	61	70	6	8	35	26	40	30	8	10	10	10
A10		1 or 2	87	90	3	8	35	52	50	60	8	6	10	10
⑤ A15		1 or 2	87	90	3	8	35	52	50	60	8	6	10	10
⑤ A20		1 or 2	110	125	2	6	58	52	60	60	6	6	10	10
J48HC-B00, B0Z	230/208-3	1	25	35	8	10								
B05		1	40	50	8	10								
B09		1	52	60	6	10								
④ B15		1	53	60	6	10								
④ B18		2	N/A	N/A	N/A	N/A	52	28	60	30	6	10	10	10
J48HC-C00, C0Z	460-3	1	12	15	14	14								
C05		1	20	25	10	10								
C09		1	25	30	10	10								
④ C15		1	26	30	10	10								
J60HC-A00, A0Z	230/208-1	1	42	60	8	10								
A05		1 or 2	67	80	4	8	41	26	50	30	8	10	10	10
A10		1 or 2	93	100	3	8	41	52	50	60	8	6	10	10
⑤ A15		1 or 2	93	100	3	8	41	52	60	60	8	6	10	10
⑤ A20		1 or 2	112	125	2	6	60	52	60	60	6	6	10	10
J60HC-B00, B0Z	230/208-3	1	29	40	8	10								
B09		1	56	60	6	10								
④ B15		1	56	60	6	10								
④ B18		2	N/A	N/A	N/A	N/A	55	28	60	30	6	10	10	10
J60HC-C00, C0Z	460-3	1	14	20	12	12								
C09		1	28	30	10	10								
④ C15		1	28	30	10	10								

① These "Minimum Circuit Ampacity" values are to be used for sizing the field power conductors. Refer to the National Electrical code (latest version), Article 310 for power conductor sizing. **CAUTION**: When more than one field power circuit is run through one conduit, the conductors must be derated. Pay special attention to note 8 of Table 310 regarding Ampacity Adjustment Factors when more than three (3) current carrying conductors are in a raceway.

② Maximum size of the time delay fuse or circuit breaker for protection of field wiring conductors.

③ Based on 75°copper wire. All wiring must conform to the National Electrical Code and all local codes.

④ Maximum KW that can operate with the heat pump on is 9KW. Full heat available during emergency heat mode.

⑤ Maximum KW that can operate with the heat pump on is 10KW. Full heat available during emergency heat mode.

NOTE: *The Maximum Overcurrent Protection (MOCP) value listed is the maximum value as per UL 1995 calculations for MOCP (branch-circuit conductor sizes in this chart are based on this MOCP). The actual factory-installed overcurrent protective device (circuit breaker) in this model may be lower than the maximum UL 1995 allowable MOCP value, but still above the UL 1995 minimum calculated value or Minimum Circuit Ampacity (MCA) listed.*

IMPORTANT: *While this electrical data is presented as a guide, it is important to electrically connect properly sized fuses and conductor wires in accordance with the National Electrical Code and all local codes.*

Setting Unit Airflow

The unit is set from the factory at the default speed. Most units have three selectable cooling speed taps that can be utilized. The default speed is the lowest cooling speed. The two higher speed taps can be used for higher duct static applications so that the unit can maintain the recommended airflow as shown in Table 13. The higher speeds can also be used when higher sensible cooling is desired. To change to the higher speed taps, move the orange/black wire on the blower speed terminal block to either MED or HI. Refer to Table 15 on page 38 for the corresponding airflow of each tap. Set the unit duct static based on the highest airflow that the unit will run at.

TABLE 13
Recommended Airflow

Model	Nominal Rated CFM*	Nominal Rated ESP*	Recommended Airflow Range	Factory Speed Connection
J42HC	1350	.15	1250 - 1600	Default
J48HC	1550	.20	1450 - 1750	
J60HC	1750	.20	1650 - 2000	

* Rated CFM and ESP on factory speed connection.

NOTE: *Be sure to adjust the system static or blower speed to maintain airflows above the minimum recommendations to prevent freeze up conditions if Balanced Climate mode is activated.*

Do not operate the unit in Balanced Climate mode if running high static applications as indicated in the blower performance table. If Balanced Climate mode is activated as described on page 19, the unit will run in this mode at all times unless there is a call for ventilation, electric heat or 2nd stage cooling from a 2-stage thermostat. At that time, the unit will automatically activate a higher speed tap.

Blower Speeds

Five factory programmed speed taps (torque settings) are available for the motor, and are selected through different unit modes of operation. These modes are energized by 24VAC signals from the low voltage terminal block located inside the control panel by a thermostat or other controlling device. Each speed tap is programmed by Bard at the factory to different motor torque settings (see Figure 26).

FIGURE 26
Speed Taps

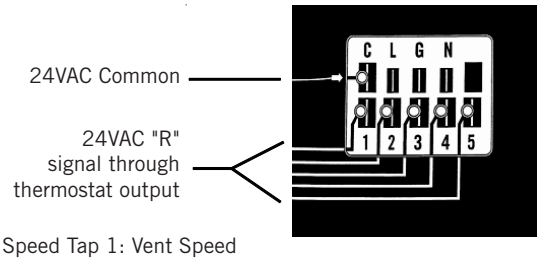

Speed Tap 1: Vent Speed
Speed Tap 2: Balanced Climate Speed
Speed Tap 3: Default Speed
Speed Tap 4: Medium Speed
Speed Tap 5: High Speed

Multiple motor speed taps may be energized simultaneously by 24VAC power during different modes of operation. The highest number speed tap energized takes priority with 5 being the highest and 1 being the lowest. See Table 14 for the corresponding blower speeds with the different modes of operation.

Programmed blower speed taps are as follows (see also Figure 27):

Speed Tap 1: **Vent/blower only** speed

Speed Tap 2: **Balanced Climate** speed

Speed Tap 3: **Default LO cooling & heating** speed. Energized by default for cooling operation through the blower speed tap selection and is labeled as LO.

Speed Tap 4: **Optional MED Cooling & heating** speed. Selected manually through the blower speed tap selection and is labeled as MED.

Speed Tap 5: **Optional HI cooling & heating** speed. Selected manually through the blower speed tap selection and is labeled as HI.

FIGURE 27
Speed Taps

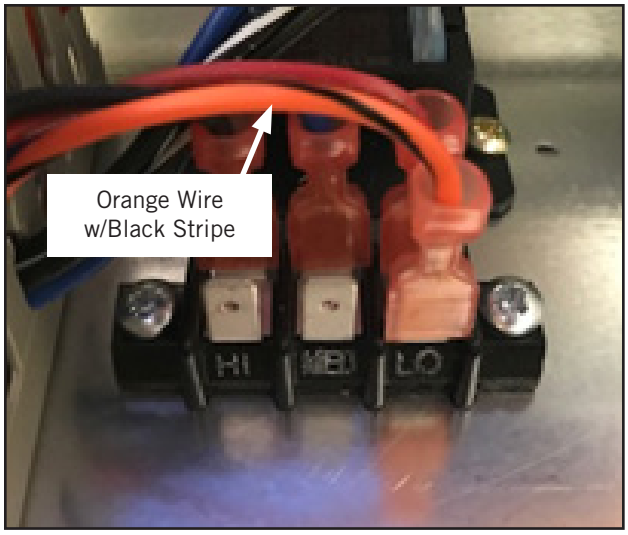

Speed Tap 1 – Vent/Blower Only

Speed taps 1 and 3 are programmed to identical torque settings in the ECM motor. This means that if speed tap 1 is energized, the airflow amount will be the same as default airflow. Tap 1 is used when a vent is installed and ventilation is called for by energizing the A terminal of the low voltage terminal block with 24VAC. Speed tap 1 is the lowest priority; if any of the other speed taps are energized, they will override speed tap 1.

Speed Tap 2 – Balanced Climate

Speed tap 2 is programmed to a lower than rated speed in the ECM motor. In order for Balanced Climate speed to be used during compressor cooling mode, the jumper between Y1 and Y2 must be removed. This means that if speed tap 2 is energized, the airflow amount will be lower than default airflow. Tap 2 is used when Balanced Climate is called for by energizing the Y1 terminal of the low voltage terminal block with 24VAC. Speed tap 2 is overridden if taps 3, 4, or 5 are energized.

Speed Tap 3 – Default LO Cooling & Heating

Speed tap 3 is programmed for rated speed in the SelecTech motor. This means that if speed tap 3 is energized, the airflow amount will be the default airflow. Tap 3 is used by default when cooling is called for by energizing the Y1 terminal of the low voltage terminal block with 24VAC. The unit is shipped with the jumper between Y1 and Y2 installed and it must be removed to use Balanced Climate mode. The unit is shipped with the orange/black wire connected to terminal LO (rated speed) on the blower selection speed terminal block. Speed tap 3 can be overridden if taps 4 or 5 are energized by changing the position of the orange/black wire on the blower selection speed terminal block to MED (4) or HI (5) positions.

Speed Tap 4 – Optional MED Cooling & Heating

Speed tap 4 is programmed to a higher than rated speed in the ECM motor. This is a user-selectable airflow amount that will be higher than rated airflow. Tap 4 is used for cooling operation if the orange/black wire on the blower speed selection terminal block is moved to MED. Speed tap 4 can be overridden if tap 5 is energized.

Speed Tap 5 – Optional HI Cooling & Heating

Speed tap 5 is programmed to the highest speed in the ECM motor. This is a user-selectable airflow amount that will provide the highest rated airflow. Tap 5 is used for cooling operation if the orange/black wire on the blower speed selection terminal block is moved to HI.

TABLE 14
Blower Speeds for Unit Operational Modes

Unit Operation	Thermostat Inputs – 24VAC							Speed Taps			Blower Speed	Compressor Operation
	G	Y1	Y2	B/W1	W2	W3	D	1	2	3-4-5[1]		
Blower Only	X							X			Vent/Blower Only	Off
Balanced Climate Cooling	X	X						X	X		Balanced Climate	On
Full Load Cool	X	X	X					X	X	X	Lo/Med/Hi	On
Balanced Climate Heat Pump Heating	X	X		X				X	X		Balanced Climate	On
Full Load Heat Pump Heating	X	X	X	X				X	X	X	Lo/Med/Hi	On
1st Stage Electric Heat					X					X	Lo/Med/Hi	Off
2nd Stage Electric Heat					X	X				X	Lo/Med/Hi	Off
Dehumidify[2]							X	X	X		Balanced Climate	On

1 Fan speed is selectable through the blower speed control terminal block. LO (default), MED or HI speeds can be used.
2 Dehumidification operation is disabled when a call for heating or cooling occurs. Unit runs at Balanced Climate speed during dehumidification operation.

TABLE 15
Indoor Blower Performance

	E.S.P.[1] (In. H_2O)	Balanced Climate™ Speed		Default LO Cooling & Heating/Ventilation Speed[2]		Optional MED Cooling & Heating Speed		Optional HI Cooling & Heating Speed	
		Dry Coil	Wet Coil	Dry Coil	Wet Coil	Dry Coil	Wet Coil	Dry Coil	Wet Coil
J42HC	0.00	1205	1065	1575	1460	1745	1640	1815	1690
	0.10	1050	955	1485	1400	1665	1560	1740	1630
	0.15	980	900	1440	1360	1625	1520	1705	1600
	0.20	915	845	1400	1325	1585	1485	1665	1570
	0.25			1360	1280	1550	1450	1630	1535
	0.30			1315	1235	1510	1415	1590	1500
	0.40			1240	1140	1435	1345	1515	1430
	.050			1165	1030	1360	1275	1435	1355
J48HC	0.00	1320	1270	1745	1665	1895	1800	1985	1860
	0.10	1225	1160	1700	1615	1850	1760	1915	1810
	0.15	1180	1110	1675	1585	1825	1735	1880	1780
	0.20	1130	1060	1650	1555	1795	1705	1845	1755
	0.25			1615	1520	1765	1675	1815	1720
	0.30			1580	1480	1735	1640	1780	1690
	0.40			1500	1400	1665	1565	1715	1620
	.050			1410	1305	1595	1480	1655	1545
J60HC	0.00	1485	1490	1985	1890	2075	2005	2165	2030
	0.10	1430	1365	1920	1830	2015	1950	2085	1985
	0.15	1400	1305	1890	1800	1985	1920	2050	1960
	0.20	1360	1250	1855	1765	1955	1885	2015	1935
	0.25			1820	1730	1920	1855	1985	1910
	0.30			1785	1690	1890	1820	1955	1880
	0.40			1715	1605	1825	1750	1900	1820
	.050			1645	1515	1755	1675	1855	1750

[1] E.S.P. is the total combined external static pressure of both the supply and return ducts or grills.
[2] This is the speed set at the factory.

TABLE 16
Maximum ESP of Operation
Electric Heat Only

Model	J42HC, J48HC		J60HC	
Outlet	FRONT		FRONT	
Speed	High	Low	High	Low
-A0Z	.50	.50	.50	.50
-A04	.50	.50	.50	.50
-A05	.50	.50	.50	.50
-A10	.50	.50	.50	.50
-A15	.50	.50	.50	.50
-A20	.50	.50	.50	.40
-B0Z	.50	.50	.50	.50
-B06	.50	.50	.50	.50
-B09	.50	.50	.50	.50
-B15	.50	.50	.50	.50
-B18	.50	.50	.50	.50
-C0Z	.50	.50	.50	.50
-C09	.50	.50	.50	.50
-C15	.50	.50	.50	.50

Values shown are for units equipped with standard 1" throwaway filter or 1" washable filter.

Derate ESP by .15 for 2" pleated filters.

TABLE 17
Electric Heat

Models	240V-1		208V-1		240V-3		208V-3		460V-3	
KW	Amps	BTUH	Amps	BTUH	Amps	BTUH	Amps	BTUH	Amps	BTUH
4	16.7	13652	14.4	10239						
5	20.8	17065	18.0	12799	12.0	17065	10.4	12799	6.0	17065
9					21.7	30717	18.7	23038	10.4	28260
10	41.7	34130	36.1	25598						
15	62.5	51195	54.1	38396	36.1	51195	31.2	38396	17.3	47099
18					43.3	61434	37.5	46076		
20	83.3	68260	72.1	51195						

TABLE 18
Vent and Control Options

Part Number	Description	All Models
CMH-35	LAC - On/Off	X
FAD-NE5	Fresh Air Damper - No Exhaust	X
ECON-WD5	Economizer - Bldg. Equipment, Enthalpy	X
ECON-DB5	Economizer - Bldg. Equipment, Temperature	X

TABLE 19
Optional Accessories

		J42HC-A	J42HC-B	J42HC-C	J48HC-A	J48HC-B	J48HC-C	J60HC-A	J60HC-B	J60HC-C
Heater Kits	EHW3HC-A04	X								
	EHW3HC-A05	X								
	EHW3HC-A15	X								
	EHW3HC-B05		X			X				
	EHW3HC-B09		X							
	EHW3HC-B15		X							
	EHW3HC-C05			X						
	EHW3HC-C15			X						
	EHW3HCDC09			X						
	EHW4HC-A04				X					
	EHW4HC-A05				X					
	EHW4HC-A15				X					
	EHW4HC-A20				X					
	EHW4HC-B09					X				
	EHW4HC-B15					X				
	EHW4HC-B18					X				
	EHW4HC-C05						X			
	EHW4HC-C09						X			
	EHW4HC-C15						X			X
	EHW6HC-A15							X		
	EHW6HC-A20							X		
	EHW6HC-B09								X	
	EHW6HC-B15								X	
	EHW6HC-B18								X	
	EHW6HC-C09									X
	EHW6HCDA05							X		
	EHW6HCDA10	X			X			X		
Circuit Breaker (WMCBC)	WMCBC-05B		X			X				
	WMCBC-06B								X	
	WMCBC-06C			X			X			X
	WMCBC-07A	X								
	WMCBC-08A				X					
	WMCBC-09A							X		

GRAPH 1
J42HC FAD-NE5 W/O Exhaust Ventilation Delivery

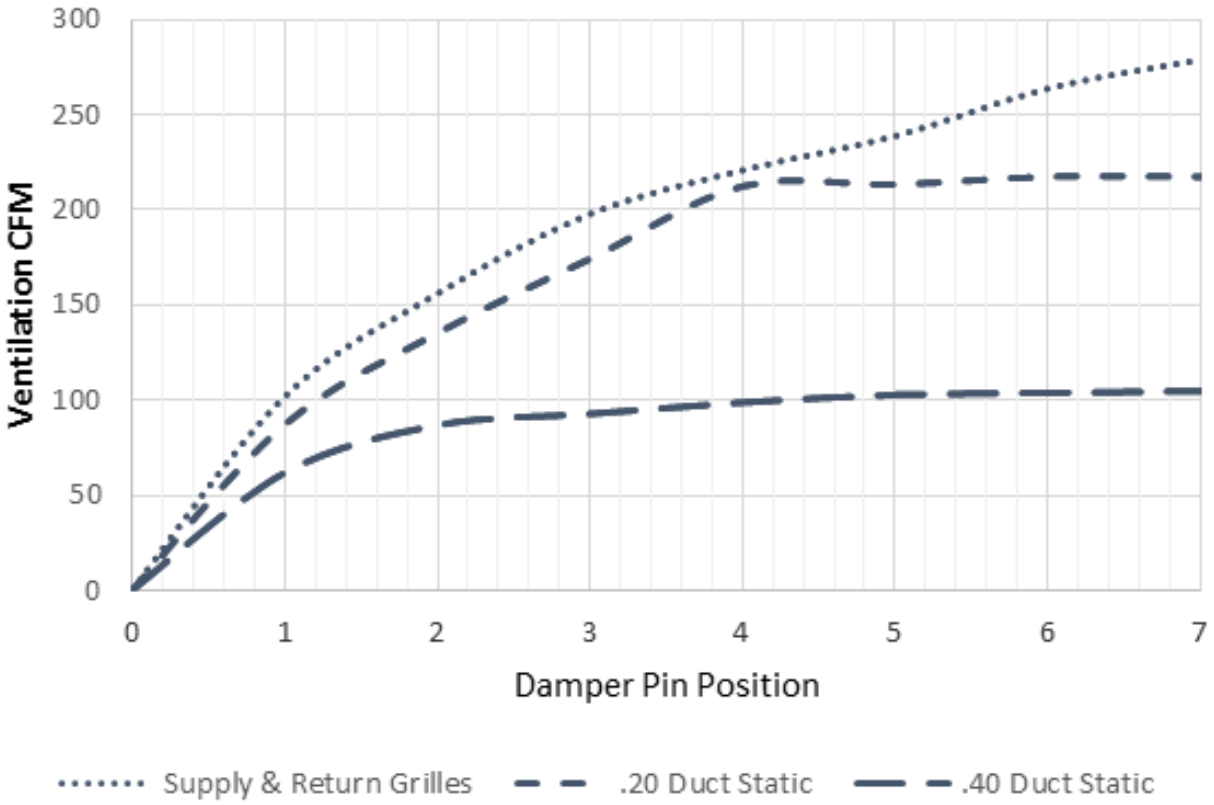

GRAPH 2
J48HC FAD-NE5 W/O Exhaust Ventilation Delivery

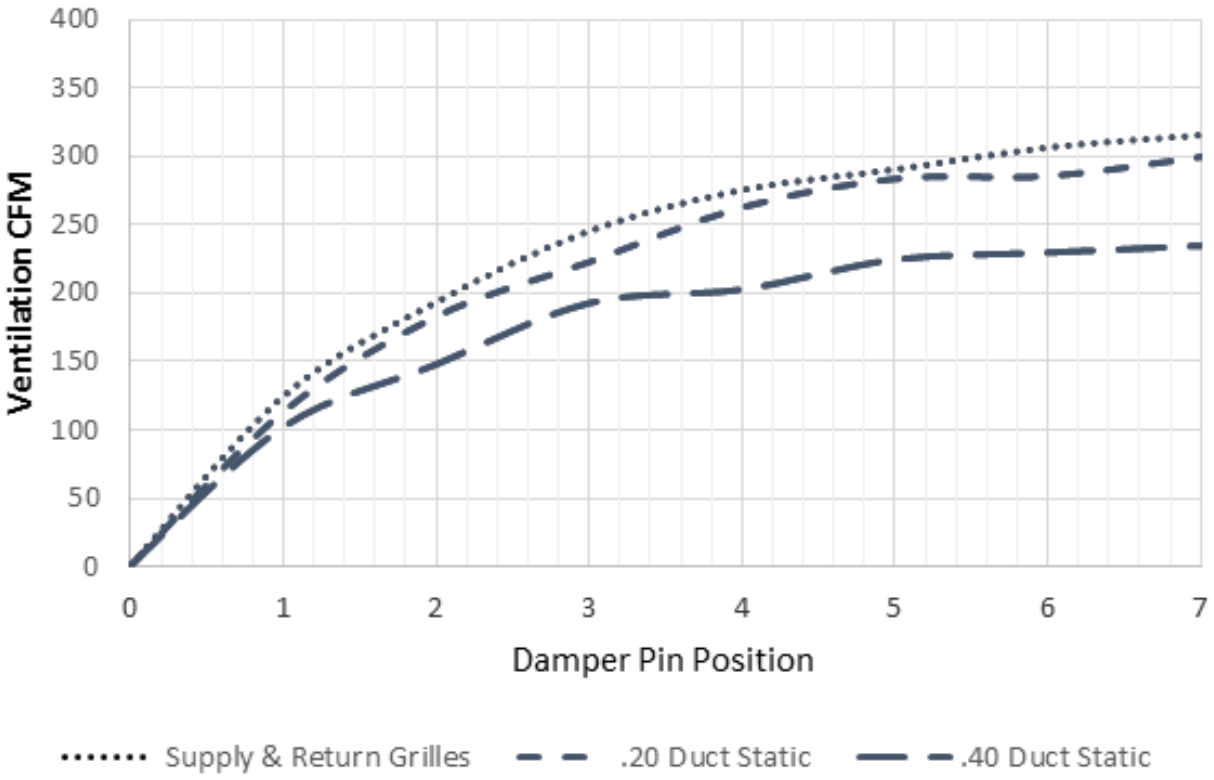
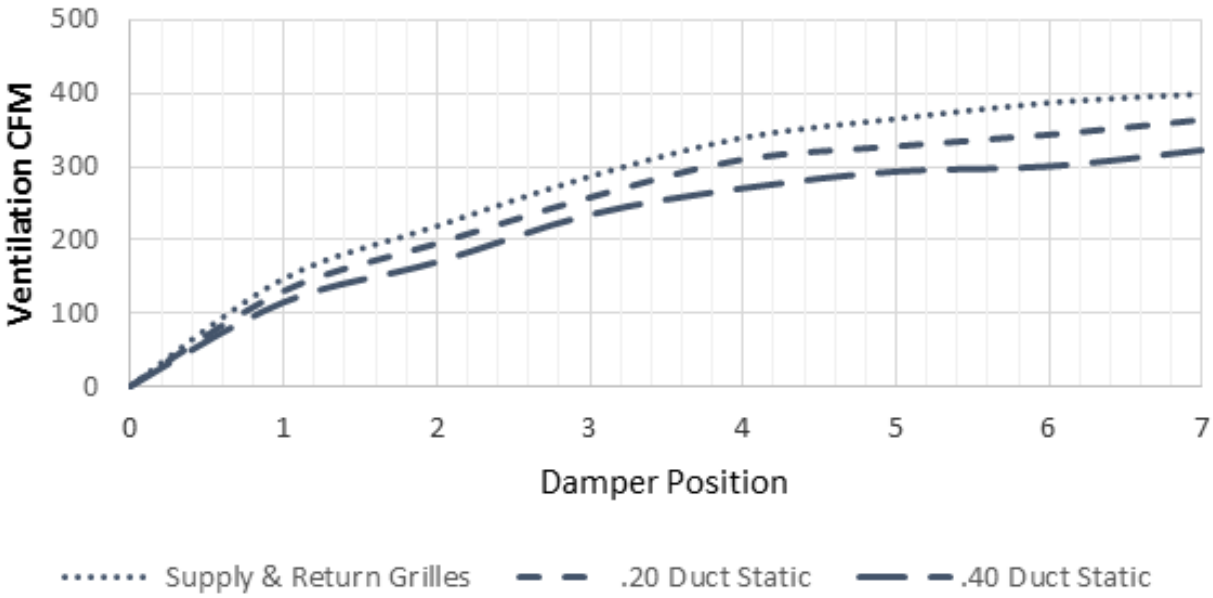
GRAPH 3
J60HC FAD-NE5 W/O Exhaust Ventilation Delivery