INSTALLATION INSTRUCTIONS

QW Series Geothermal R-410A
Staged Capacity Packaged Heat Pump

Models:

QW2S3DA	QW3S3DA	QW4S3DA	QW5S3DA
QW2S3DB	QW3S3DB	QW4S3DB	QW5S3DB
QW2S3DC	QW3S3DC	QW4S3DC	QW5S3DC

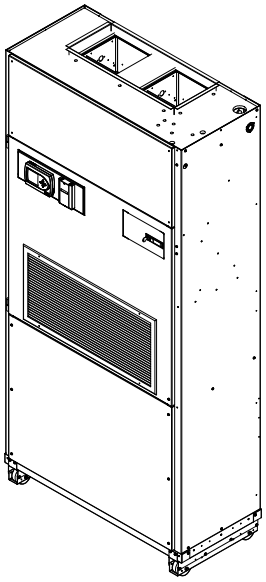

MIS-2736

Earth Loop Fluid
Temperatures 25 – 110
Ground Water Temperature 45 – 75

Bard®
SINCE 1914
Climate Control Solutions

Bard Manufacturing Company, Inc.
Bryan, Ohio 43506
www.bardhvac.com

Manual No.: 2100-738F
Supersedes: 2100-738E
Date: 5-14-21

CONTENTS

Getting Other Information and Publications
For more information, contact these publishers: 4

QW General Information
QW Model Nomenclature..... 5
Shipping Damage 9
Unit Removal From Skid 9
Handling Unit After Removal From Skid 9
Removal of Wall Bracket from Shipping Location... 10
General 10
Minimum Installation Height 11
Duct Work 15
Filters 15
Condensate Drain 15
Mist Eliminator Service..... 17

Installation
Mounting the Unit 19
Wiring – Main Power..... 22
Wiring – Low Voltage Wiring..... 22
General 22
Low Voltage Connections..... 23

Valve and Actuator Installation/Removal
Valve Installation..... 31
iSeries Smart Actuator Removal and Installation ... 31

Start Up
Description of Standard Equipment..... 32
Important Installer Note..... 33
Phase Monitor..... 33
Rated CFM 33
Service Hints 33
Adjustments 34
Pressure Service Ports 35
Piping Access to Unit 35
System Start Up..... 35

Sequence of Operation
Cooling..... 40
Heating 40
Geothermal Logic Control..... 40
Modulating Water Line Control..... 41
iSeries Smart Actuator 42

Dehumidification
Model Features 43
Special Features 43

Closed Loop (Earth Coupled Ground Loop Applications)
Circulation System Design..... 54
Copper Water Coil Application 54
Start Up Procedure for Closed Loop System 54

Open Loop (Well System Applications)
Water Connections..... 56
Well Pump Sizing 57
System Start Up Procedure for Open Loop Applications..... 57
Water Corrosion..... 58
Remedies of Water Problems 58
Lake and Pond Installations 59
Cooling Tower/Boiler Application 61

Service
Unbrazing System Components..... 64
Troubleshooting Geothermal Logic CCM 64
Troubleshooting Water Modulating Actuator Diagnostics..... 65
Troubleshooting Modulating Water Line Control Board..... 67
Compressor Solenoid 68
Troubleshooting GE ECM™ Blower Motors 69

Quick Reference Troubleshooting Chart for Water to Air Heat Pump..... 71

Ground Source Heat Pump Performance Report..... 72

Figures

Figure 1 Unit Dimensions 8
Figure 2 Removal of Unit From Skid 9
Figure 3 Proper Handling of Unit After Removal from Skid 10
Figure 4 Installation of Unit w/Wall Sleeve 11
Figure 5 Shipping Assembly – Bracket Locations.. 12
Figure 6 Installation of QW Wall Sleeve Through a Window Opening..... 13
Figure 7 Installation With Free Blow Plenum 14
Figure 8 Ducted Application 14
Figure 9 Supply Duct Connections..... 15
Figure 10A Condensate Drain..... 16
Figure 10B Optional Rear Drain..... 16
Figure 10C Rear Drain (Top View) 17
Figure 11 Removal of Q-TEC ERV 18
Figure 12 Remove Locking Screws from Wheels... 19
Figure 13 Unit Mounting Without Wall Sleeve..... 20
Figure 14 Component Location 21
Figure 15 Low Voltage Wire Harness Plug..... 23
Figure 16 Remote Thermostat Wiring "X" Option .. 24
Figure 17 Factory Mounted T-Stat Wiring "D" Option... 25
Figure 18 Factory Mounted T-Stat Wiring "H" Opt. 26
Figure 19 Remote Thermostat Wiring "K" Option ... 27
Figure 20 Fact. Mounted CompleteStat™ "1" & "3" Opt. 28
Figure 21 Fact. Mounted CompleteStat™ "2" & "4" Opt. 29
Figure 22 Fact. Mounted CompleteStat™ "1" & "3" Opt. and "2" & "4" Opt. 30
Figure 23 Valve Actuator Orientation..... 31
Figure 24 iSeries Smart Actuator Removal 31
Figure 25 Geothermal Compressor Logic Control Board..... 32
Figure 26 CO_2 Control Configuration 34
Figure 27 Fluid Connections w/Ventilation Wall Sleeve..... 36
Figure 28 Fluid Connections w/o Ventilation Wall Sleeve..... 37
Figure 29 Geothermal Compressor Logic Control Board Jumper Designations..... 41
Figure 30 Modulating Water Line Control 41
Figure 31 iSeries Smart Actuator Electrical Terminals 42
Figure 32 iSeries Smart Actuator Temperature Setpoint..... 42
Figure 33 iSeries Smart Actuator Temperature Adjustment..... 43
Figure 34 Cooling Mode and Dehumidification Mode Circuit Diagrams 44
Figure 35 Water Temperature and Pressure Test Procedure..... 55
Figure 36 Piping Diagram..... 56
Figure 37 Cleaning Water Coil 59
Figure 38 Water Well System 60
Figure 39 Water Source H/P Cooling Cycle 62
Figure 40 Water Source H/P Heating Cycle..... 63
Figure 41 LED Fault Illumination 65
Figure 42 iSeries Smart Actuator..... 65
Figure 43 Modulating Water Line Control Board ... 67
Figure 44 Control Disassembly 70
Figure 45 Winding Test..... 70
Figure 46 Drip Loop 70

Tables

Table 1A Electrical Specifications 6
Table 1B Electrical Specifications 7
Table 2 Operating Voltage Range..... 22
Table 3 Wall Thermostats 22
Table 4 Indoor Blower Performance 33
Table 5 Pressure Table 38
Table 6 Optional Accessories 39
Table 7A QW2S3D Dehumidification Performance Cooling Full Load 45
Table 7B QW2S3D Dehumidification Performance Dehumidification Full Load 46
Table 8A QW3S3D Dehumidification Performance Cooling Full Load 47
Table 8B QW3S3D Dehumidification Performance Dehumidification Full Load 48
Table 9A QW4S3D Dehumidification Performance Cooling Full Load 49
Table 9B QW4S3D Dehumidification Performance Dehumidification Full Load 50
Table 10A QW5S3D Dehumidification Performance Cooling Full Load 51
Table 10B QW5S3D Dehumidification Performance Dehumidification Full Load 52
Table 11 Dehumidification Relay Logic Board..... 53
Table 12 Constant Flow Valves 56
Table 13 Water Flow and Pressure Drop 61
Table 14 Multi-Status LED 65
Table 15 Temperature F vs. Resistance R of Temperature Sensor..... 66
Table 16 Modulating Water Line Control Board Logic 67
Table 17 Solenoid Coil Resistance..... 68

GETTING OTHER INFORMATION AND PUBLICATIONS

These publications can help with installing the heat pump. They can usually be found at the local library or purchased directly from the publisher. Be sure to consult current edition of each standard.

National Electrical Code..... ANSI/NFPA 70

Standard for the Installation ..... ANSI/NFPA 90A of Air Conditioning and Ventilating Systems

Standard for Warm Air..... ANSI/NFPA 90B Heating and Air Conditioning Systems

Load Calculation for Residential .....ACCA Manual J Winter and Summer Air Conditioning

Duct Design for Residential ..... ACCA Manual D Winter and Summer Air Conditioning and Equipment Selection

Closed-Loop/Ground Source Heat Pump..... IGSHPA Systems Installation Guide

Grouting Procedures for Ground-Source ..... IGSHPA Heat Pump Systems

Soil and Rock Classification for the Design..... IGSHPA of Ground-Coupled Heat Pump Systems

Ground Source Installation Standards..... IGSHPA

Closed-Loop Geothermal Systems – Slinky ..... IGSHPA Installation Guide

For more information, contact these publishers:

ACCA **Air Conditioning Contractors of America**
1712 New Hampshire Avenue
Washington, DC 20009
Telephone: (202) 483-9370
Fax: (202) 234-4721

ANSI **American National Standards Institute**
11 West Street, 13th Floor
New York, NY 10036
Telephone: (212) 642-4900
Fax: (212) 302-1286

ASHRAE **American Society of Heating Refrigerating, and Air Conditioning Engineers, Inc.**
1791 Tullie Circle, N.E.
Atlanta, GA 30329-2305
Telephone: (404) 636-8400
Fax: (404) 321-5478

NFPA **National Fire Protection Association**
Batterymarch Park
P.O. Box 9101
Quincy, MA 02269-9901
Telephone: (800) 344-3555
Fax: (617) 984-7057

IGSHPA **International Ground Source Heat Pump Association**
490 Cordell South
Stillwater, OK 74078-8018

QW SERIES GEOTHERMAL R-410A STAGED CAPACITY GENERAL INFORMATION

QW 3 S 3 D A 0Z B X V X C X

MODEL NUMBER
Q-TEC™ Model

CAPACITY
2 – 2 Ton
3 – 3 Ton
4 – 4 Ton
5 – 5 Ton

STEP CAPACITY

REVISION

DEHUMIDIFICATION

VOLTS & PHASE
A – 230/208/60/1
B – 230/208/60/3
C – 460/60/3

KW
0Z – 0KW

VENTILATION OPTIONS
B - Blank-off Plate
V - Commercial Ventilator - Motorized w/Exhaust Spring Return
R - Energy Recovery Ventilator w/Independent Intake & Exhaust Control
S - Energy Recovery Ventilator w/Intelligent Frost Control Option
T - Energy Recovery Ventilator w/Occupied Space CFM Control Option

FILTER OPTIONS
X – 2-Inch Pleated (MERV8)
N – 2-Inch Pleated (MERV13)
B – NPBI TECH + 2-Inch Pleated (MERV13)
A – UV-C + 2-Inch Pleated (MERV13)

COLOR
1 – White Paint
4 – Gray Paint
X – Beige Paint
V – Platinum w/Slate Front (Vinyl)

CLIMATE CONTROL OPTIONS (Factory Mounted)
X – 24V Terminal Block Only ①
D – 8403-060 Electronic/Programmable Thermostat w/Humidity Control
H – 8403-060 Prog. Thermostat w/Humidity Control + 8403-096 CO_2 Controller
K – 24V Terminal Block + 8403-096 CO_2 Controller Only
1 – CompleteStat CS9B-THOA (Temp, Humidity & Occupancy) ②
2 – CompleteStat CS9B-THOCA (THO + CO_2) ②
3 – CompleteStat CS9BE-THOA (THO w/Ethernet) ③
4 – CompleteStat CS9BE-THOCA (THO + CO_2 w/Ethernet) ③

COIL OPTIONS
C – Copper Coaxial Coil
N – Cupronickel Coaxial Coil
NOTE: Copper coils approved for ground loop and closed loop boiler/tower only

FACTORY-INSTALLED PUMP & PIPING OPTIONS
X – NONE: All pump and water connections field installed, requires field piping to the coaxial water coil using double O-ring fittings, which must be ordered separately.
P – NONE: All pump and water connections field installed, requires field piping to the coaxial water coil 1" female NPT wrought copper fittings.
3 – Single Grundfos UPS15-42F pump, isolation valves both ends, piped with copper to double O-ring fittings back corners of unit
4 – Single Grundfos UP26-64F pump, isolation valves both ends, piped with copper to double O-ring fittings back corners of unit
5 – Single Grundfos UPS26-99-FC pump, isolation valves both ends, piped with copper to double O-ring fittings back corners of unit

NOTES
① If "X" control option is selected, then thermostat and humidistat, if applicable, or DDC control system must be field supplied.
② CS9B-THOA and -THOCA are BACnet w/shielded twisted pair wiring.
③ CS9BE-THOA and -THOCA are BACnet w/shielded twisted pair wiring and Ethernet port.

TABLE 1A
Electrical Specifications

Specifications - 2 and 3 Ton						
MODELS	**QW2S3-A**	**QW2S3-B**	**QW2S3-C**	**QW3S3-A**	**QW3S3-B**	**QW3S3-C**
Electrical Rating - 60 Hertz	230/208-1	230/208-3	460-3	230/208-1	230/208-3	460-3
Operating Voltage Range	253-197 VAC		414-506 VAC	253-197 VAC		414-506 VAC
Minimum Circuit Ampacity	20	14	9	27	22	13
++ Delay Fuse or Circuit Breaker Max	30	20	15	40	30	15
COMPRESSOR - CIRCUIT A						
Voltage	230/208-1	230/208-3	460-3	230/208-1	230/208-3	460-3
Rated Load Amps	11.7/13.0	6.5/7.2	3.9	15.6/17.4	11.6/12.9	6.4
Branch Circuit Selection Current	11.7	6.5	3.9	15.7	11.7	6.5
Locked Rotor Amps	58.3	55.4	28	83	73	38
BLOWER MOTOR						
Blower Motor HP/SPD	1/3/Variable			1/2/Variable		
Blower Motor - Amps	2.8			4.3		
Filter Sizes (inches) STD	1 - 16x20x2 & 1 - 16x16x2			1 - 16x20x2 & 1 - 16x16x2		
ENERGY RECOVERY VENTILATOR						
ERV Voltage	230/208-60-1			230/208-60-1		
ERV - Full Load Amps	2.2			2.2		
SHIPPING WEIGHT - LBS	475 lb.			475 lb.		

Specifications - 4 and 5 Ton						
MODELS	**QW4S3-A**	**QW4S3-B**	**QW4S3-C**	**QW5S3-A**	**QW5S3-B**	**QW5S3-C**
Electrical Rating - 60 Hertz	230/208-1	230/208-3	460-3	230/208-1	230/208-3	460-3
Operating Voltage Range	253-197 VAC		414-506 VAC	253-197 VAC		414-506 VAC
Minimum Circuit Ampacity	37	28	17	43	30	16
++ Delay Fuse or Circuit Breaker Max	50	40	20	60	45	20
COMPRESSOR - CIRCUIT A						
Voltage	230/208-1	230/208-3	460-3	230/208-1	230/208-3	460-3
Rated Load Amps	21.2/23.6	14.0/15.6	7.1	26.9/30.0	16.5/18.4	8.1
Branch Circuit Selection Current	22.0	14.6	7.2	27.0	16.6	9.0
Locked Rotor Amps	104	83.1	41	139.9	110	52
BLOWER MOTOR						
Blower Motor HP/SPD	3/4/Variable			3/4/Variable		
Blower Motor - Amps	6.8			6.8		
Filter Sizes (inches) STD	1 - 16x25x2 & 1 - 16x16x2			1 - 16x25x2 & 1 - 16x16x2		
ENERGY RECOVERY VENTILATOR						
ERV Voltage	230/208-60-1			230/208-60-1		
ERV - Full Load Amps	2.2			2.2		
SHIPPING WEIGHT - LBS	505 lb.			505 lb.		

TABLE 1B
Electrical Specifications

Model	RATED VOLTS, Hz & PHASE	NO. FIELD POWER CIRCUITS	① MINIMUM CIRCUIT AMPACITY	② MAXIMUM EXTERNAL FUSE OR CIRCUIT BREAKER	③ FIELD POWER WIRE SIZE	③ GROUND WIRE SIZE
QW2S3DA0Z	230/208-60-1	1	20	30	10	10
QW2S3DB0Z	230/208-60-3	1	14	20	12	12
QW2S3DC0Z	460-60-3	1	9	15	14	14
QW3S3DA0Z	230/208-60-1	1	27	40	8	10
QW3S3DB0Z	230/208-60-3	1	22	30	10	10
QW3S3DC0Z	460-60-3	1	13	15	14	14
QW4S3DA0Z	230/208-60-1	1	37	50	8	10
QW4S3DB0Z	230/208-60-3	1	28	35	8	10
QW4S3DC0Z	460-60-3	1	17	20	12	12
QW5S3DA0Z	230/208-60-1	1	43	60	8	10
QW5S3DB0Z	230/208-60-3	1	30	40	8	10
QW5S3DC0Z	460-60-3	1	15	20	10	10

① These "Minimum Circuit Ampacity" values are to be used for sizing the field power conductors. Refer to the National Electrical code (latest version), Article 310 for power conductor sizing. ***CAUTION:*** *When more than one field power circuit is run through one conduit, the conductors must be derated. Pay special attention to note 8 of Table 310 regarding Ampacity Adjustment Factors when more than three (3) current carrying conductors are in a raceway.*

② Maximum size of the time delay fuse or circuit breaker for protection of field wiring conductors.

③ Based on 75°copper wire. All wiring must conform to the National Electrical Code and all local codes.

NOTE: *The Maximum Overcurrent Protection (MOCP) value listed is the maximum value as per UL 1995 calculations for MOCP (branch-circuit conductor sizes in this chart are based on this MOCP). The actual factory-installed overcurrent protective device (circuit breaker) in this model may be lower than the maximum UL 1995 allowable MOCP value, but still above the UL 1995 minimum calculated value or Minimum Circuit Ampacity (MCA) listed.*

IMPORTANT: *While this electrical data is presented as a guide, it is important to electrically connect properly sized fuses and conductor wires in accordance with the National Electrical Code and all local codes.*

FIGURE 1
Unit Dimensions

UNIT	DIM. "A"	DIM. "B"	DIM. "C"	DIM. "D"	DIM. "E"
QW2S, QW3S	8 5/8"	42"	30"	43"	25"
QW4S, QW5S	8 3/4"	48"	40"	49"	30"

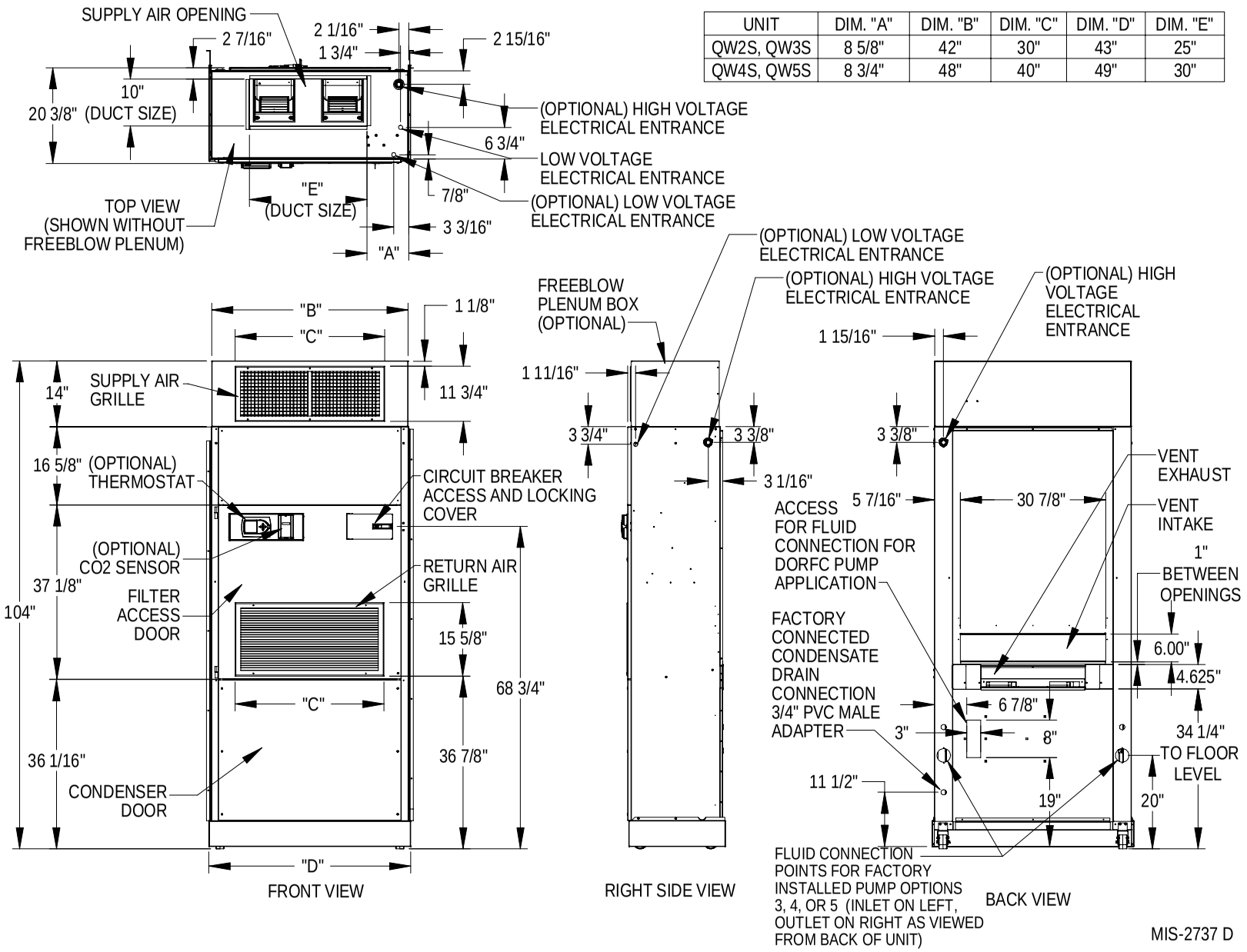

Shipping Damage

Upon receipt of equipment, the carton should be checked for external signs of shipping damage. The skid must remain attached to the unit until the unit is ready for installation. If damage is found, the receiving party must contact the last carrier immediately, preferably in writing, requesting inspection by the carrier's agent.

Unit Removal from Skid

⚠ WARNING

This unit is heavy and requires more than one person to handle and remove from the skid. Check unit wheels to ensure that wheels are locked before removing from skid. Extreme caution must be taken to prevent injury to personnel and damage to the unit.

It is recommended that the unit not be removed from the skid with a forklift.

The shipping brackets on each side of the unit must be removed and discarded (see A in Figure 2). The return air grille panel can be removed to provide a place to hold the unit. The unit can be slid forward on the skid until the front wheels hang over the edge of the skid (see B in Figure 2). The unit can be tipped forward and slid down the edge of the skid until the front wheels touch the ground (see C in Figure 2). The wheels will not roll. They are shipped from the factory locked so they will not roll. The back of the skid will have to be held down to keep it from tipping up. The skid can be slid out from under the unit. The unit can then be set upright.

Handling Unit after Removal from Skid

⚠ WARNING

Exercise extreme caution when pushing the unit on the rollers. Handle and push from the lower 1/3 of the unit. Ensure that debris is not on the floor where the unit is to be moved on the rollers. Failure to do so could result in the unit tipping over and causing bodily injury and/or damage to the unit.

The unit will have to be turned sideways and removed from the skid to fit through a 36" doorway. If the door height allows, the unit can be slid sideways through the door.

If the unit can not be slid through the door, then the unit will have to be put on a cart and tipped down to roll through the door. It is recommended that an appliance cart be used with a strap to hold the unit on the cart. **The wheels of the unit must be locked**. If the wheels were allowed to roll, the unit could roll off the cart. **The unit should always be carted from the left side.** This is the side where the compressor is located. See Figure 3 on page 10. The blade of the appliance cart should be slid under the wheels of the unit. The strap of the appliance cart should be placed around the unit and strapped tightly. Help will be required to tip the unit back onto the cart. The unit can be leaned far enough back to be rolled through the door. Be careful when setting the unit back up to keep from damaging the unit.

FIGURE 2
Removal of Unit from Skid

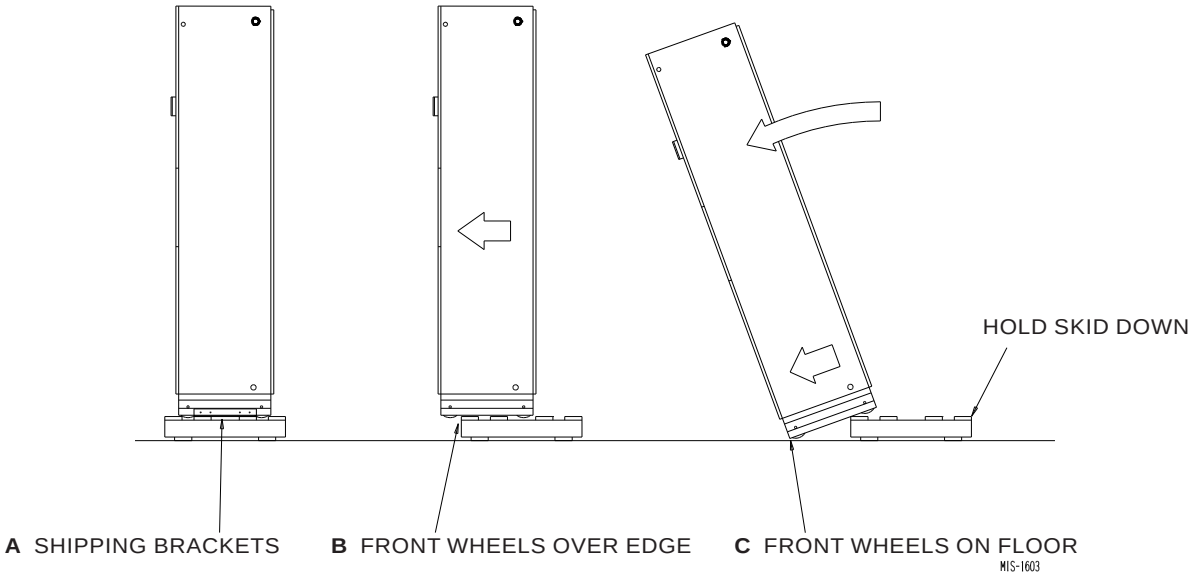

FIGURE 3
Proper Handling of Unit after Removal from Skid

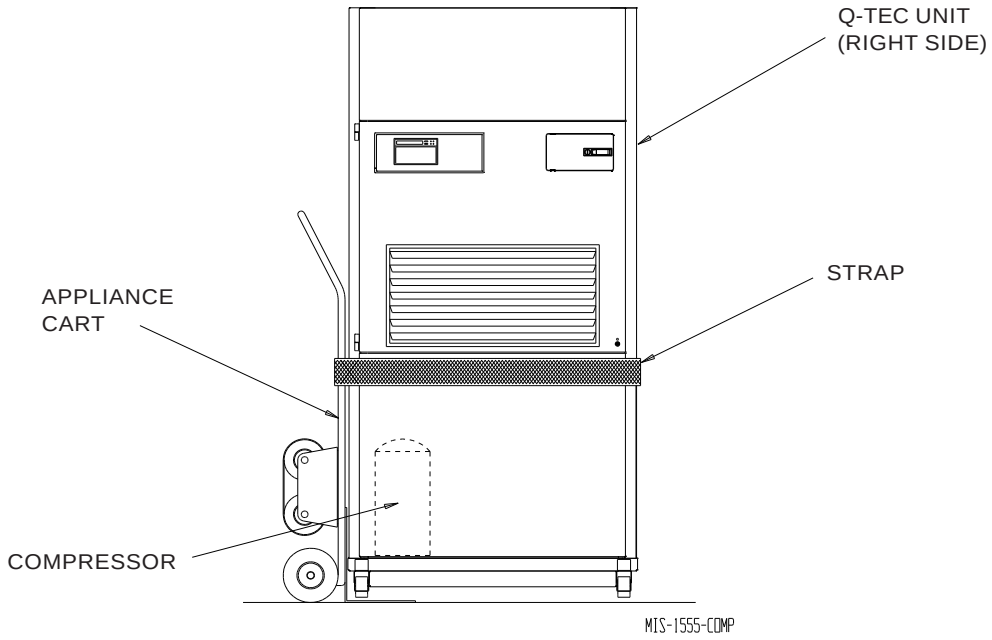

Removal of Wall Bracket from Shipping Location

Units without Vent Options

The wall brackets are attached to the back of the unit, as shown in the BACK VIEW in Figure 5 on page 12. Remove and retain the wall brackets for use when attaching the unit to the wall.

Units with Vent Options

Units equipped with a vent option require a wall sleeve. Remove and retain the unit to sleeve brackets for use when attaching the unit to the sleeve. The brackets are attached to the shipping crate, as shown in FRONT VIEW in Figure 5 on page 12.

General

The equipment covered in this manual is to be installed by trained, experienced service and installation technicians.

The unit is designed for use with or without duct work. For use without duct work, plenum box QPB** is recommended.

These instructions explain the recommended method to install the water source self-contained unit and the electrical wiring connections to the unit.

These instructions and any instructions packaged with any separate equipment required to make up the entire air conditioning system should be carefully read before beginning the installation. Note particularly “Start Procedure” and any tags and/or labels attached to the equipment.

While these instructions are intended as a general recommended guide, they do not supersede any national and/or local codes in any way. Authorities having jurisdiction should be consulted before the installation is made. See page 4 for information on codes and standards.

Size of unit for a proposed installation should be based on heat loss calculation made according to methods of Air Conditioning Contractors of America (ACCA). The air duct should be installed in accordance with the Standards of the National Fire Protection Systems of Other Than Residence Type, NFPA No. 90A and Residence Type Warm Air Heating and Air Conditioning Systems, NFPA No. 90B. Where local regulations are at a variance with instructions, installer should adhere to local codes.

FIGURE 4
Installation of Unit through Wall with Wall Sleeve

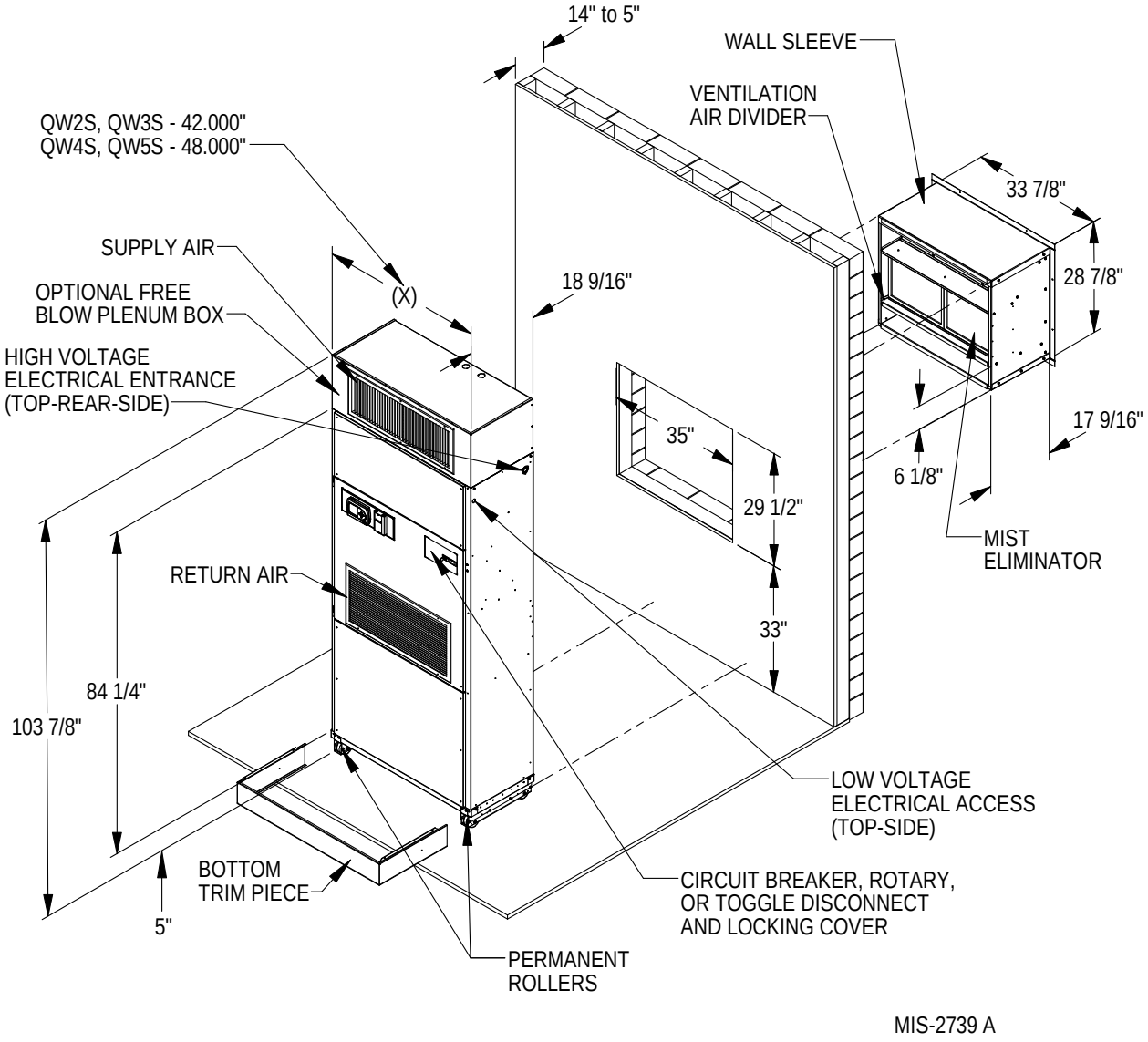

Minimum Installation Height

The minimum installation height of the unit with a free blow plenum is 8 ft. 9 in. This provides enough clearance for the plenum to be removed. See Figure 5 on page 12.

The minimum installation height for ducted applications is 8 ft. 9 in. This provides enough clearance to install the duct work. See Figure 6 on page 12.

FIGURE 5
Shipping Assembly – Bracket Locations

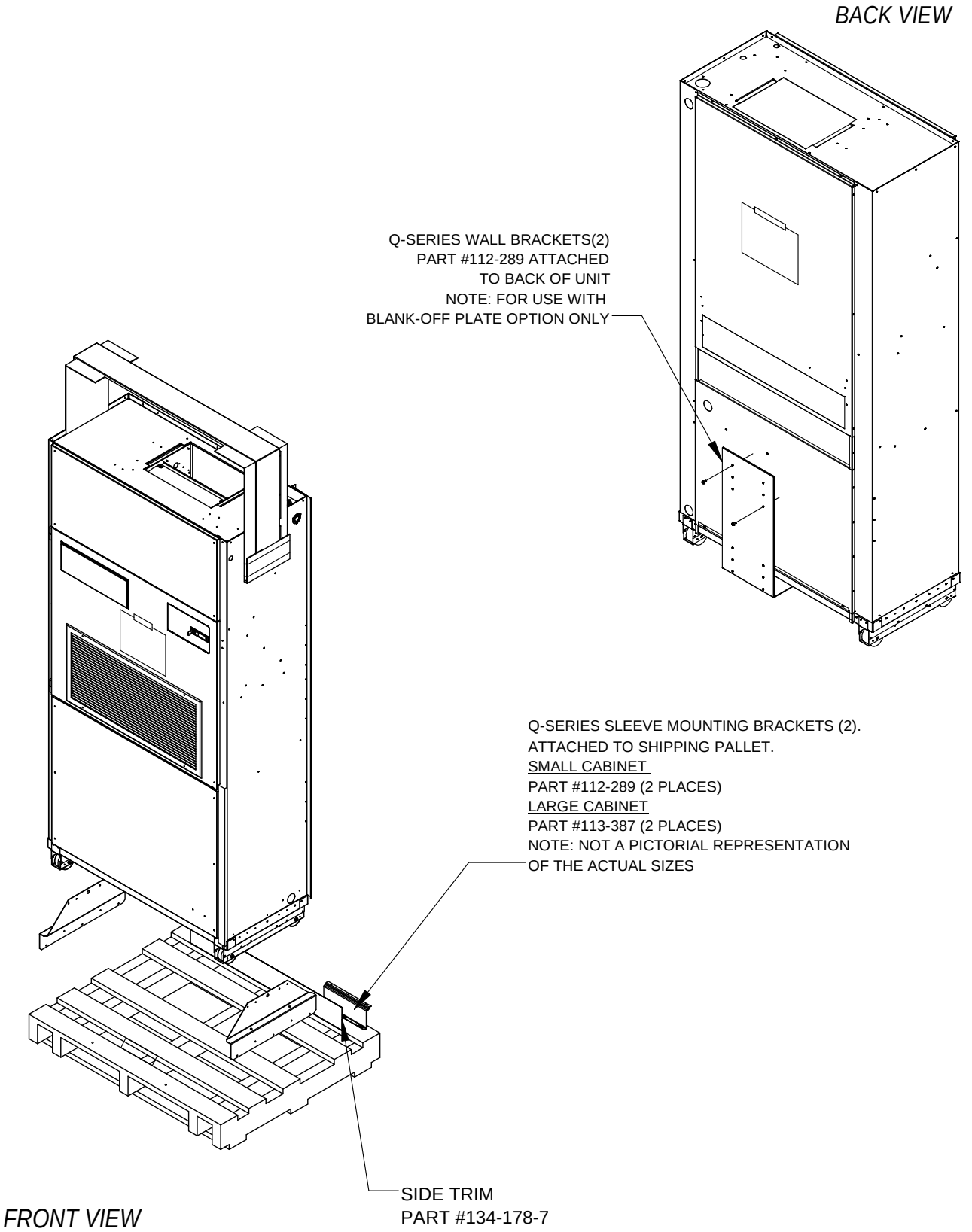

MIS-4162

FIGURE 6
Installation of QW Wall Sleeve Through a Window Opening

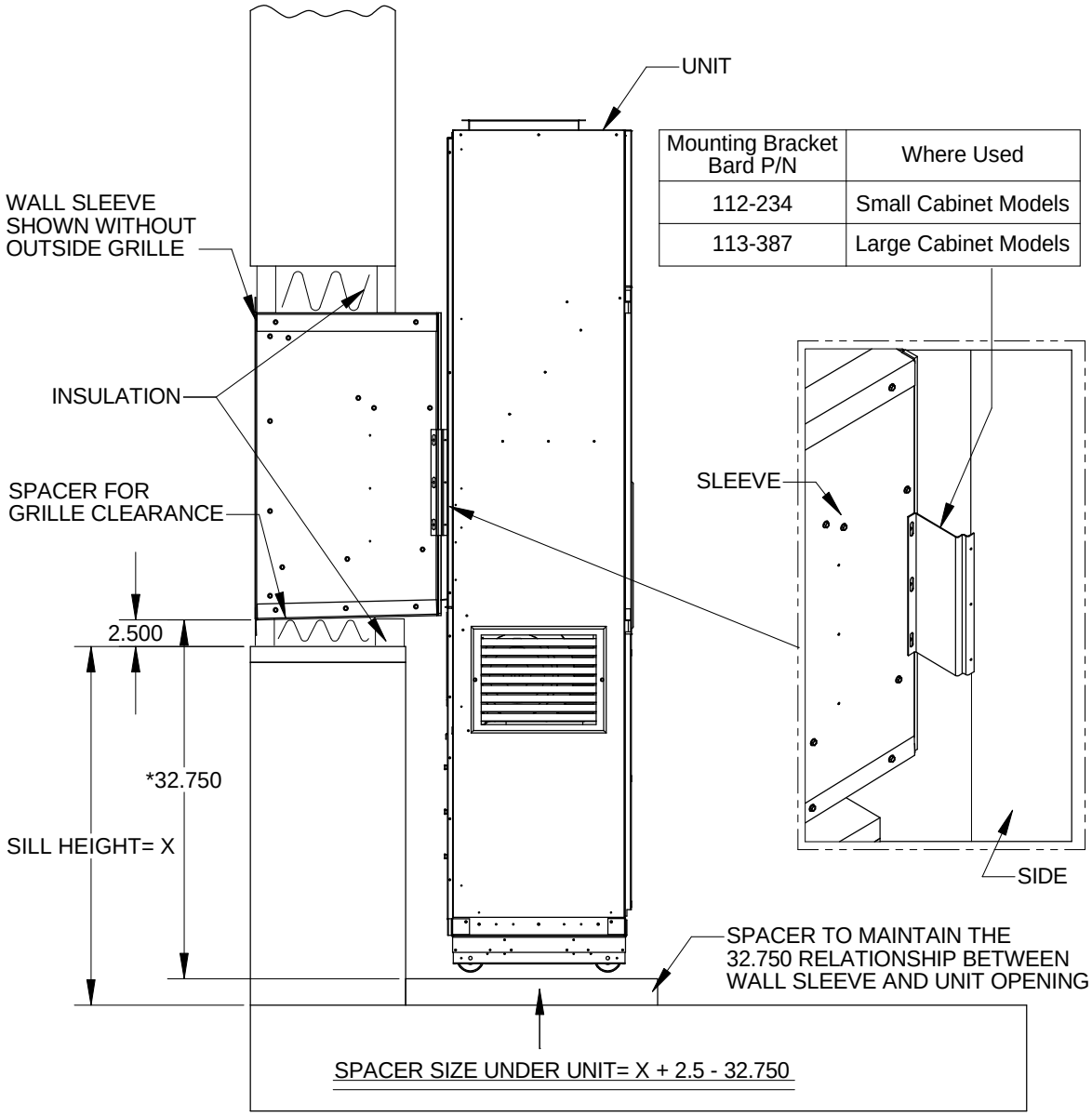

Mounting Bracket Bard P/N	Where Used
112-234	Small Cabinet Models
113-387	Large Cabinet Models

*THIS DIMENSION MUST REMAIN CONSTANT WHEN FABRICATING UNIT AND WALL SLEEVE REGARDLESS OF THE WINDOW SILL DIMENSIONS

MIS-1614 A

FIGURE 7
Installation with Free Blow Plenum

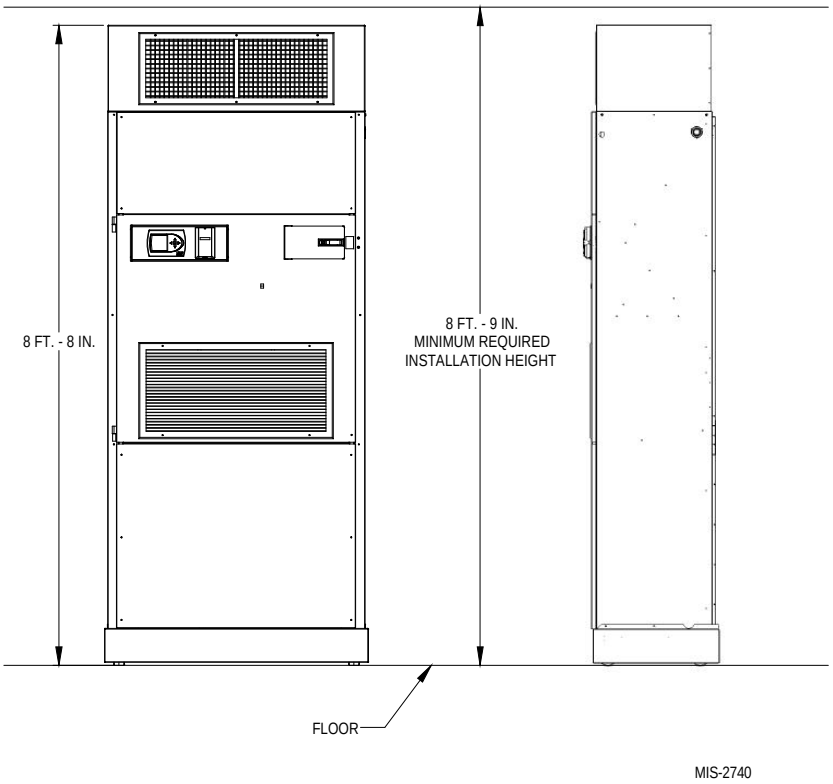

FIGURE 8
Ducted Application

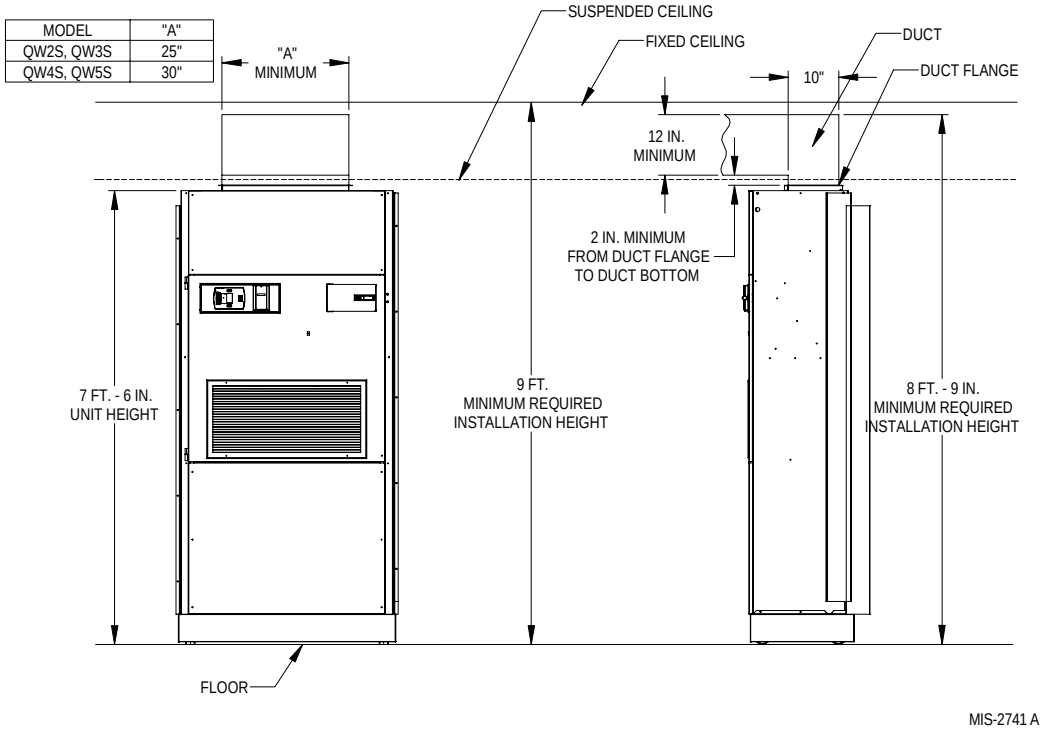

Duct Work

Any heat pump is more critical of proper operating charge and an adequate duct system than a straight air conditioning unit. All duct work must be properly sized for the design airflow requirement of the equipment. Air Conditioning Contractors of America (ACCA) is an excellent guide to proper sizing. All duct work or portions thereof not in the conditioned space should be properly insulated in order to both conserve energy and prevent condensation or moisture damage. When duct runs through unheated spaces, it should be insulated with a minimum of 1" of insulation. Use insulation with a vapor barrier on the outside of the insulation. Flexible joints should be used to connect the duct work to the equipment in order to keep the noise transmission to a minimum.

The QW*S Series heat pump has provisions to attach a supply air duct to the top of the unit. Duct connection size is 10" x 25" nominal for QW2S and QW3S models. Duct connection size is 10" x 30" nominal for QW4S and QW5S models. The duct work is field supplied and must be attached in a manner to allow for ease of removal when it becomes necessary to slide the unit out from the wall for service. See Figure 9 for suggested attachment method.

NOTE: Unit cabinet, supply air duct and free blow plenum are approved for "0" clearance to combustible material.

The Q-TEC Series heat pumps are designed for use with free return (non-ducted) and either free blow with the use of QPB Plenum Box or a duct supply air system.

The QPB plenum box mounts on top of the unit and has both vertically and horizontally adjustable louvers on the front discharge grille.

FIGURE 9
Supply Duct Connections

MODEL	"A"	"B"
QW2S, QW3S	10"	25"
QW4S, QW5S	10"	30"

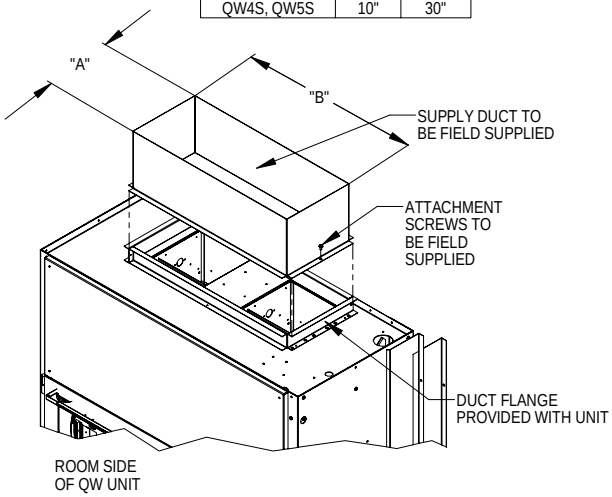

MIS-2742 A

When used with a ducted supply, a QCX cabinet extension can be used to conceal the duct work above the unit to the ceiling. This extends 20" above the unit for a total height above the floor of 10'-7/8". The unit is equipped with a variable speed indoor blower motor which increases in speed with an increase in duct static pressure. The unit will therefore deliver proper rated airflow up to the Maximum ESP shown in Table 4 on page 33. However, for quiet operation of the air system, the duct static should be kept as low as practical, within the guidelines of good duct design.

Filters

Two 2" pleated filters are supplied with each unit. The filters fit into a fixed rack.

The filters are serviced from the inside of the building. To gain access to the filters release the latch on the circuit breaker door and one 1/4 turn fastener near the bottom of the door. This door is hinged on the left so it will swing open.

The internal filter brackets are adjustable to accommodate 1" filters. The tabs for the 1" filters must be bent up to allow the 1" filters to slide in place.

Condensate Drain

The condensate drain hose is routed down from the evaporator drain pan on the right side of the unit into the compressor compartment. There are three locations that the drain can exit the cabinet.

If the drain is to be hard plumbed, there is a 3/4" PVC female adapter located on the cabinet rear panel. In these installations, the drain tube is to be slipped over the pipe connection inside of the cabinet; this is how it is shipped from the factory (see Figure 10C on page 17).

For a stand pipe type of drain, the drain hose can exit the rear of the cabinet. There is adequate hose length to reach the floor on the right hand side of the unit (see Figure 10A on page 16).

NOTE: Whichever type of drain connection is used, a "P" trap must be formed (see Figure 10A on page 16).

FIGURE 10A
Condensate Drain

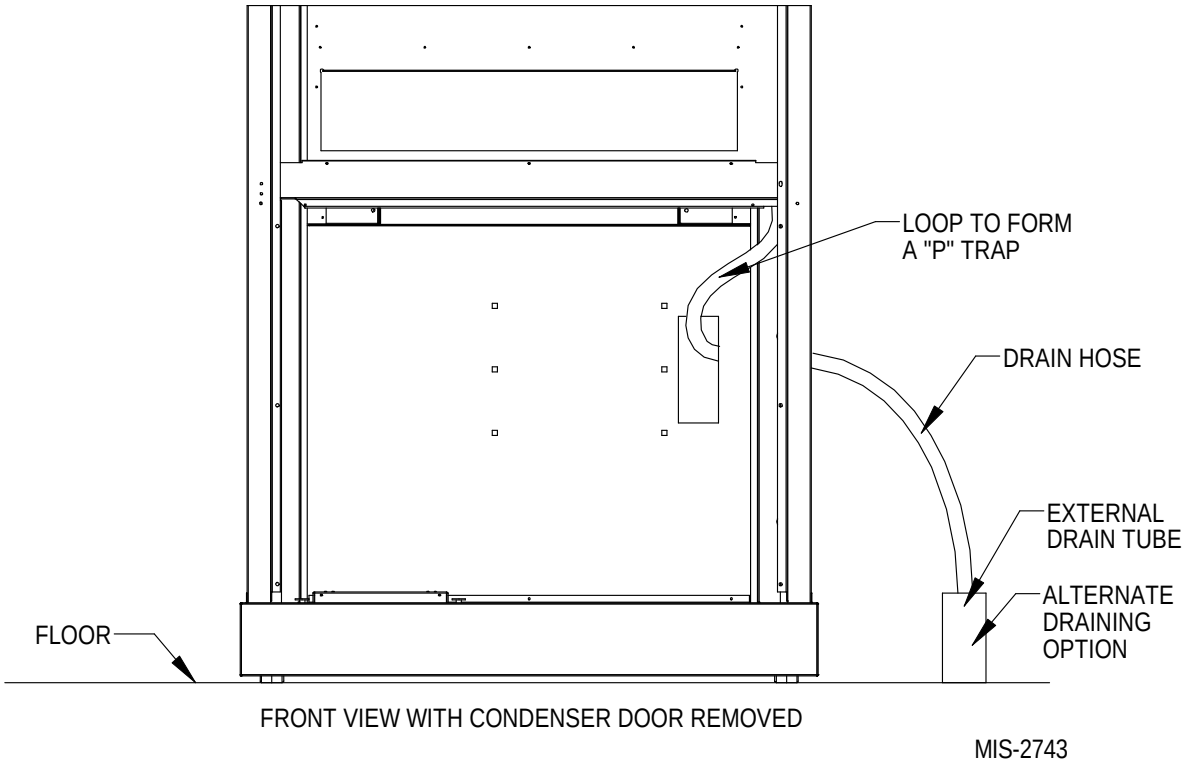

The drain can be routed through the floor or through the wall. ***If the drain is to be routed through an unconditioned space, it must be protected from freezing***. The drain line must be able to be removed from the unit if it is necessary to remove the unit from the wall.

Figure 10B
Optional Rear Drain

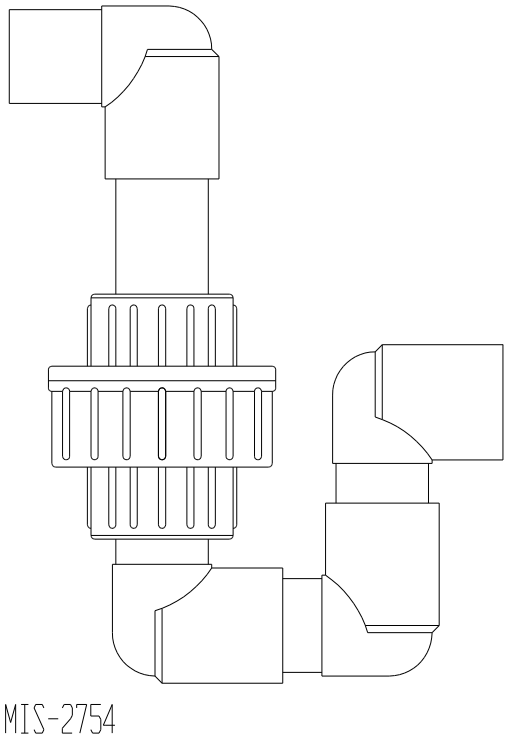

The ***rear drain*** can be used with wall thickness of up to 10" where a water trap can be installed between the unit and the interior wall (see Figure 10B). The trap cannot extend beyond the edge of the unit or it will interfere with the wall mounting bracket. The drain can be routed through the floor or through the wall. If the drain is routed through the wall, the drain line must be positioned such that it will not interfere with the sleeve flange or the grille (see Figure 10C). ***If the drain is to be routed through an unconditioned space, it must be protected from freezing.***

Figure 10C
Rear Drain (Top View)

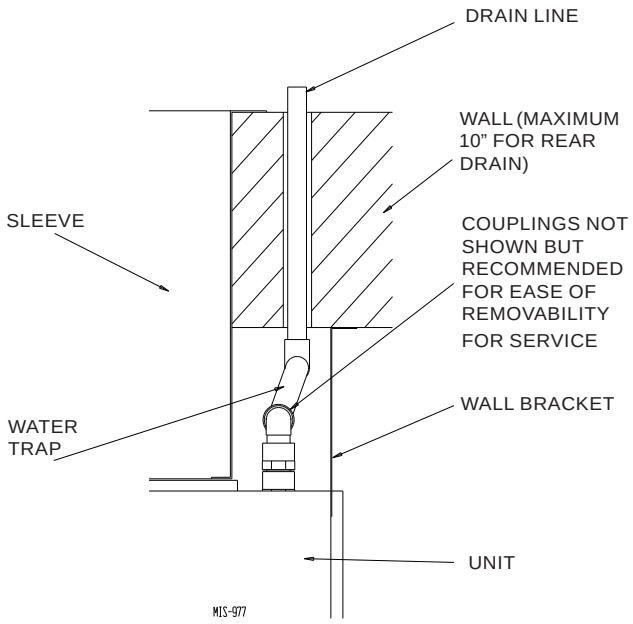

Mist Eliminator Service

(Optional – only used with one of the vent options)

A mist eliminator is supplied with the wall sleeve. The mist eliminator is constructed of aluminum frame and mesh. The mist eliminator is located in the top section of the wall sleeve and can be removed from the inside of the building without removing the unit from the wall. This requires that the ventilation package must be removed.

The steps necessary to remove each of the vent options are listed following.

It is recommended that the mist eliminator be inspected annually and serviced as required. The mist eliminator can be inspected from the outside of the building by looking through the outdoor grille. The mist eliminator can be serviced from the outside. The outdoor grille must be removed to do so.

The mist eliminator can be cleaned by washing with soap and water. The excess water should be shaken off the mist eliminator before it is re-installed.

Commercial Room Ventilator Option

Before starting the removal make sure the power has been turned off. The hinged return air grille panel must be opened. The commercial room ventilator (CRV) can be seen after the panel has been removed. The CRV must be removed to gain access to the mist eliminator.

1. The two mounting screws in the front of the CRV must be removed.
2. The power connectors for the CRV (located on the right side of the unit) must be disconnected. Squeeze the tabs on the sides of the connector and pull straight out. Unplug both of the connectors.
3. Slide the CRV straight out of the unit.

The mist eliminator can be seen through the opening in the back of the unit. The mist eliminator must be raised up and the bottom can be pulled toward the front of the unit and removed.

Q-TEC Energy Recovery Ventilator Option

Before starting the removal make sure that the power has been turned off. The hinged return air grille panel must be opened. The Q-TEC energy recovery ventilator (QERV) can be seen after the panel is opened. To gain access to the mist eliminator, the QERV must be removed (see Figure 11).

1. The front fill plate of the QERV must be removed. There is one screw on either side of the plate. Remove these screws and remove the plate.
2. On either side of the QERV there are mounting screws that hold the QERV in place. Remove both of these screws.
3. Underneath the heat recovery cassette there is a power connector for the lower blower assembly. To disconnect this plug, the tabs on both sides of the plug must be squeezed to release the plug. While squeezing the tabs, pull the plug out of the socket.
4. The QERV is plugged into the unit on the right side of the unit. Both of these plugs must be disconnected to remove the QERV. Squeeze the tabs on the sides of the connector and pull straight out.
5. Slide the QERV assembly straight out of the unit being careful not to let the cassette slide out of the QERV.

The mist eliminator can be seen through the opening in the back of the unit. The mist eliminator must be raised up and the bottom can be pulled toward the front of the unit and removed.

Figure 11
Removal of the Q-TEC Energy Recovery Ventilator

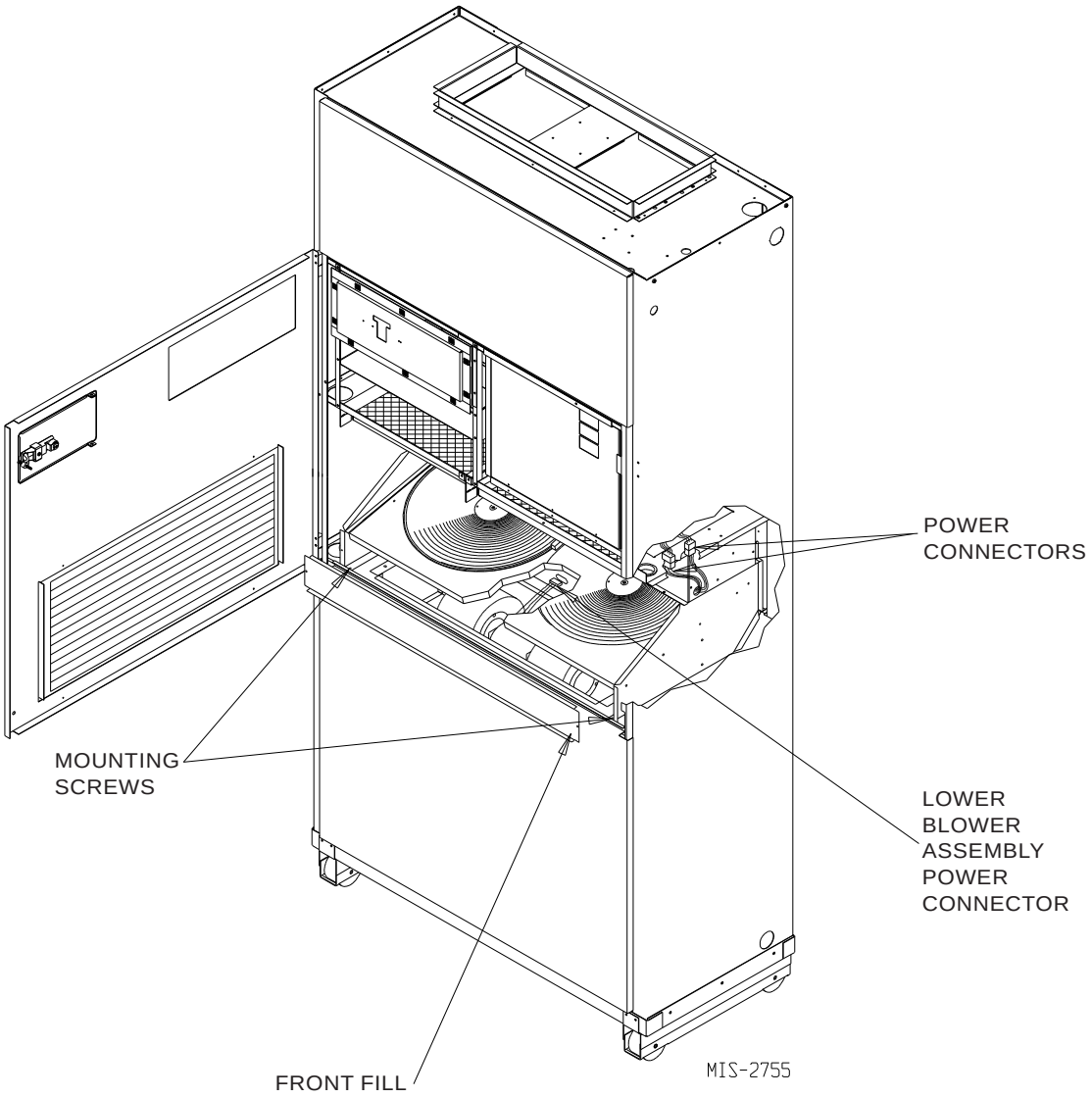

Mounting the Unit

When installing a QW unit near an interior wall on the left side, a minimum of 8" is required; 12" is preferred.

When installing a QW unit near an interior wall on the right side, a minimum of 12" is required as additional space is required to connect the drain.

This clearance is required to allow for the attachment of the unit to the wall mounting brackets and the side trim pieces to the wall.

This unit is to be secured to the wall when there is not a vent sleeve used with the wall mounting brackets provided. *(NOTE: See Figure 5 on page 12 for wall and sleeve bracket locations on shipping crate and for a pictorial representation of brackets.)* The unit itself, the supply duct and the free blow plenum are suitable for "0" clearance to combustible material.

NOTE: When a wall sleeve is to be used, attach the unit to the sleeve with bracket supplied with the wall sleeve. See Figure 5 for wall sleeve bracket.

Following are the steps for mounting the QW units. For reference see Figure 13 on page 20.

1. Attach wall mounting bracket to the structure wall with field-supplied lag bolts. The fluid piping connections are to be within the confines of this bracket. See Figure 1 on page 8 for cabinet openings and location of fluid coil connection points.
2. Position the unit in front of the wall mounting bracket.
3. Remove the locking screws from the wheels (see Figure 12).
4. Roll the unit up to the wall mounting bracket. The unit must be level from side to side. If any adjustments are necessary, shim up under the rollers with sheets of steel or any substance that is not affected by moisture.
5. Secure the unit to the wall bracket with provided #10 hex head sheet metal screws. There are prepunched holes in the cabinet sides and the bracket has slotted holes to allow for some misalignment.
6. Position the bottom trim piece to the unit and attach with provided screws (dark colored).
7. Position side trim pieces to the wall and attach with field-supplied screws. There are two long and two short pieces supplied. The long pieces are to enclose the gap behind the unit. The short pieces are to fill the gap behind the cabinet extension or the free blow plenum box. They may be cut to suit the ceiling height or overlap the unit side trim. There is sufficient length to trim up to a 10'-2" ceiling.

FIGURE 12
Removing Locking Screws from Wheels

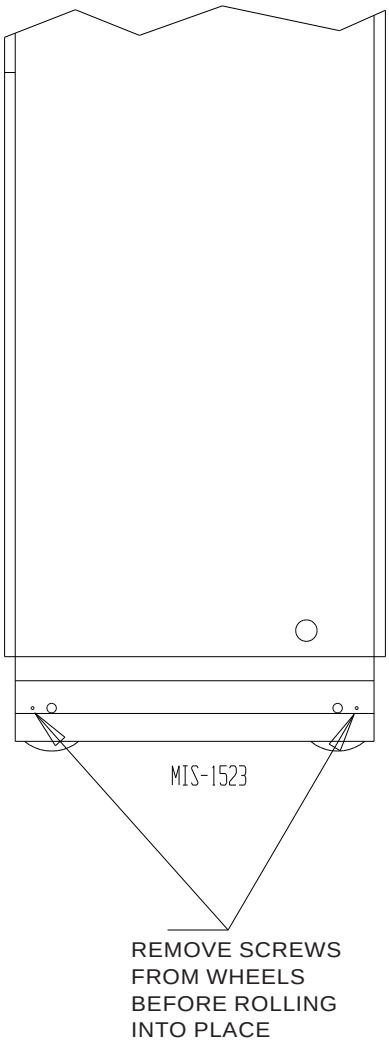

FIGURE 13
Unit Mounting without Ventilation Wall Sleeve

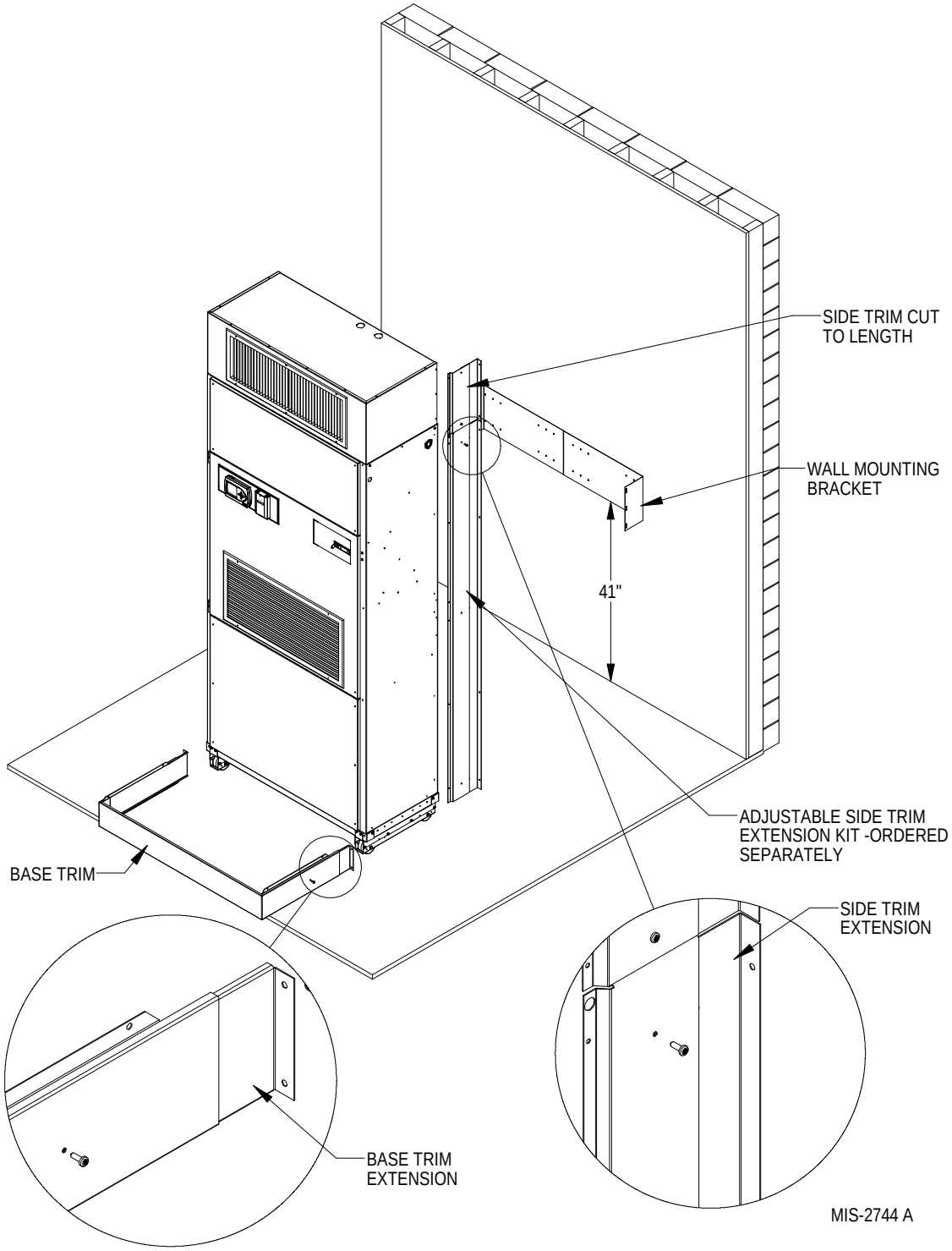

FIGURE 14
Component Location

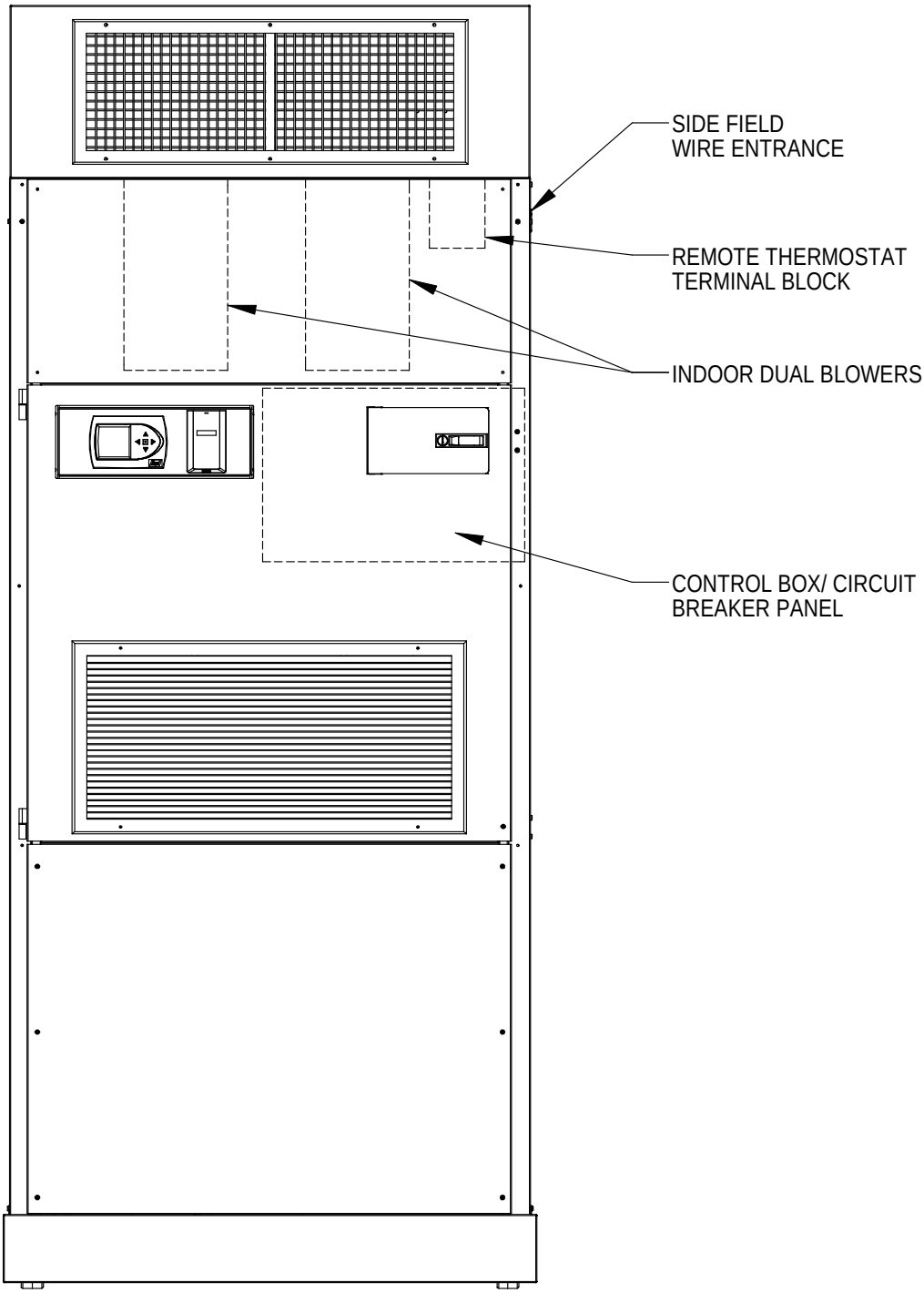

MIS-2745

Wiring – Main Power

Refer to the unit rating plate and/or Table 1B (page 7) for wire sizing information and maximum fuse or circuit breaker size. Each unit is marked with a "Minimum Circuit Ampacity". This means that the field wiring used must be sized to carry that amount of current. Depending on the installed KW of electric heat, there may be two field power circuits required. If this is the case, the unit serial plate will so indicate. All models are suitable only for connection with copper wire. Each unit and/or wiring diagram will be marked "Use Copper Conductors Only". These instructions ***must be*** adhered to. Refer to the National Electrical Code (NEC) for complete current carrying capacity data on the various insulation grades of wiring material. All wiring must conform to NEC and all local codes.

The electrical data lists fuse and wire sizes (75°C copper) for all models, including the most commonly used heater sizes. Also shown are the number of field power circuits required for the various models with heaters.

The unit rating plate lists a "Maximum Time Delay Relay Fuse" or circuit breaker that is to be used with the equipment. The correct size must be used for proper circuit protection and also to assure that there will be no nuisance tripping due to the momentary high starting current of the compressor motor.

The field wiring connections are located behind the top panel in the circuit breaker panel. The return air panel must be removed first. This panel is equipped with a door switch, which shuts the unit down when it is removed. The filter rack must be removed next.

Wiring – Low Voltage

230/208V, 1 Phase and 3 Phase Equipment Dual Primary Voltage Transformers

All equipment leaves the factory wired on 240V tap. For 208V operation, reconnect from 240V to 208V tap. The acceptable operating voltage range for the 240 and 208V taps are as noted in Table 2.

TABLE 2
Operating Voltage Range

TAP	RANGE
240V	253 - 216
208V	220 - 187

NOTE: The voltage should be measured at the field power connection point in the unit and while the unit is operating at full load (maximum amperage operating condition).

The standard Climate Control ***Option X*** is a remote thermostat connection terminal block. See Figure 16 on page 24 for wiring diagram. Compatible thermostats are listed in Table 3.

The Climate Control ***Option D*** is an electronic, programmable thermostat. The subbase of the thermostat is factory wired to the front panel of the unit. See Figure 17 on page 25 for wiring diagram. Compatible for use with Energy Recovery Ventilator or Economizer.

The Climate Control ***Option H*** is an electronic, programmable thermostat and CO_2 controller. The subbase of the thermostat and CO_2 controller are factory wired to the front panel of the unit. See Figure 16 on page 24 for wiring diagram.

General

This unit is equipped with a variable speed ECM motor. The motor is designed to maintain rated airflow up to the maximum static allowed. ***It is important that the blower motor plugs are not plugged in or unplugged while the power is on. Failure to remove power prior to unplugging or plugging in the motor could result in motor failure.***

⚠ CAUTION

Do not plug in or unplug blower motor connectors while the power is on. Failure to do so may result in motor failure.

TABLE 3
Wall Thermostat

Thermostat	Predominant Features
8403-060 (1120-445)	3 stage Cool; 3 stage Heat Programmable/Non-Programmable Electronic HP or Conventional Auto or Manual changeover
8403-081 (VT8650U5500B)	2 stage Cool; 2 stage Heat Programmable/Non-Programmable Electronic HP or Conventional, Auto or Manual changeover with Humidity and Occupancy Sensor, BACnet

Low Voltage Connections

The *"R"* terminal is the 24 VAC *hot* terminal and is supplied through Pin #10 of Plug P2.

The *"C"* terminal is the 24 VAC *common/grounded* terminal and feeds through Pin #11 of Plug P2.

The *"G"* terminal is the *indoor blower input signal* and feeds through Pin #6 of Plug P2.

The *"Y1"* terminal is the *compressor starting signal* and feeds through Pin #7 of Plug P2.

The *"Y2"* terminal is the *compressor staging solenoid signal* and feeds through Pin #4 of Plug P2.

The *"O"* terminal is the *reversing valve signal* and feeds through Pin #8 of Plug P2.

The *"A"* terminal is the *ventilation demand signal* and outputs a signal for ventilation during occupied programming conditions, and feeds through Pin #5 of Plug P2.

The *"W2"* terminal is the *auxiliary heat signal* and feeds through Pin #9 of Plug P2.

The *"W1/E"* terminal is the *emergency heat signal* and feeds through Pin #3 of Plug P2.

The *"L"* terminal is used as an *input terminal* when a CS2000 infrared occupancy device is used. It feeds through Pin #12 of Plug P2.

The *"D"* terminal is used only of dehumidification models and feeds through Pin #1 of Plug P2.

LOW VOLTAGE CONNECTIONS FOR DDC CONTROL

Fan Only	Energize G
Ventilation	Energize G, A (any mode of operation)
Part Load Cooling	Energize G, Y1, O
Full Load Cooling	Energize G, Y1, Y2, O
Part Load HP Heating	Energize G, Y1
Full Load HP Heating	Energize G, Y1, Y2
Auxiliary Heat	Energize G, W2
Dehumidification	Energize G, D, O

IMPORTANT When there is a demand for dehumidification and a demand for cooling occurs at the same time, do not drop the signal on "D" for dehumidification. Dropping an active "D" signal when a demand for cooling occurs will cause the compressor to go into an unnecessary time delay.

FIGURE 15
Blower Motor Low Voltage Wire Harness Plug

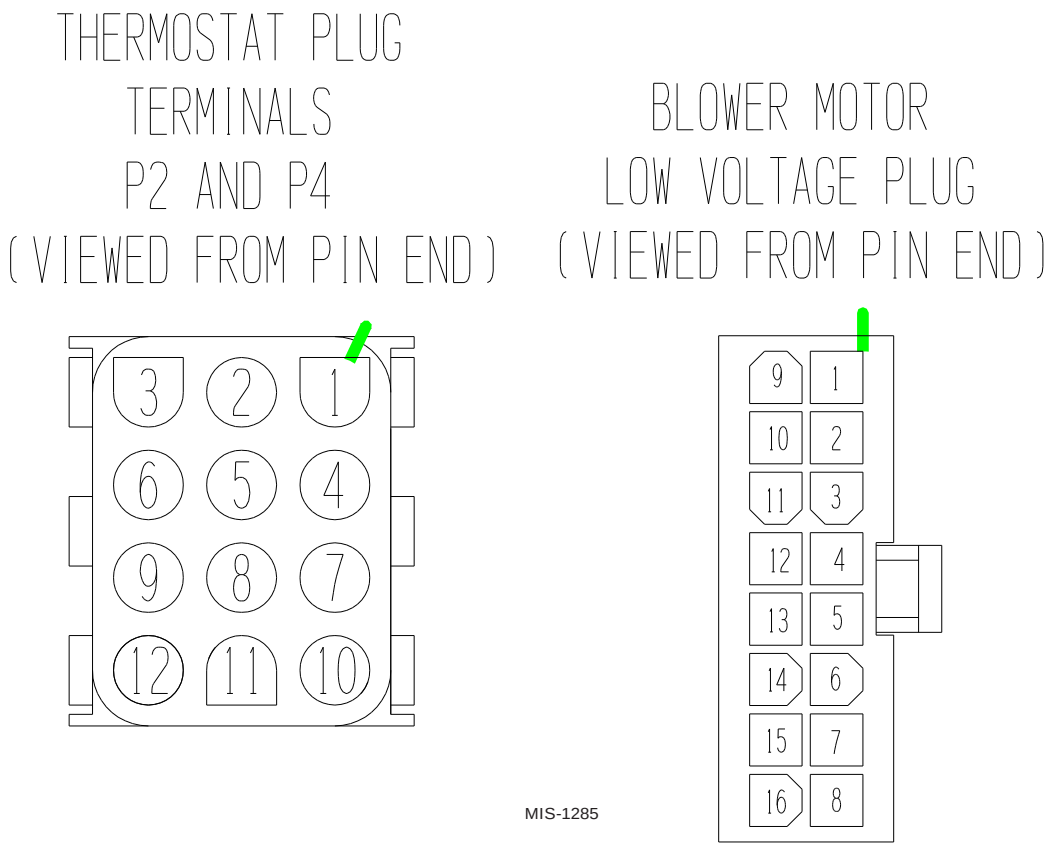

FIGURE 16
Remote Thermostat Wiring Diagram
"X" Option

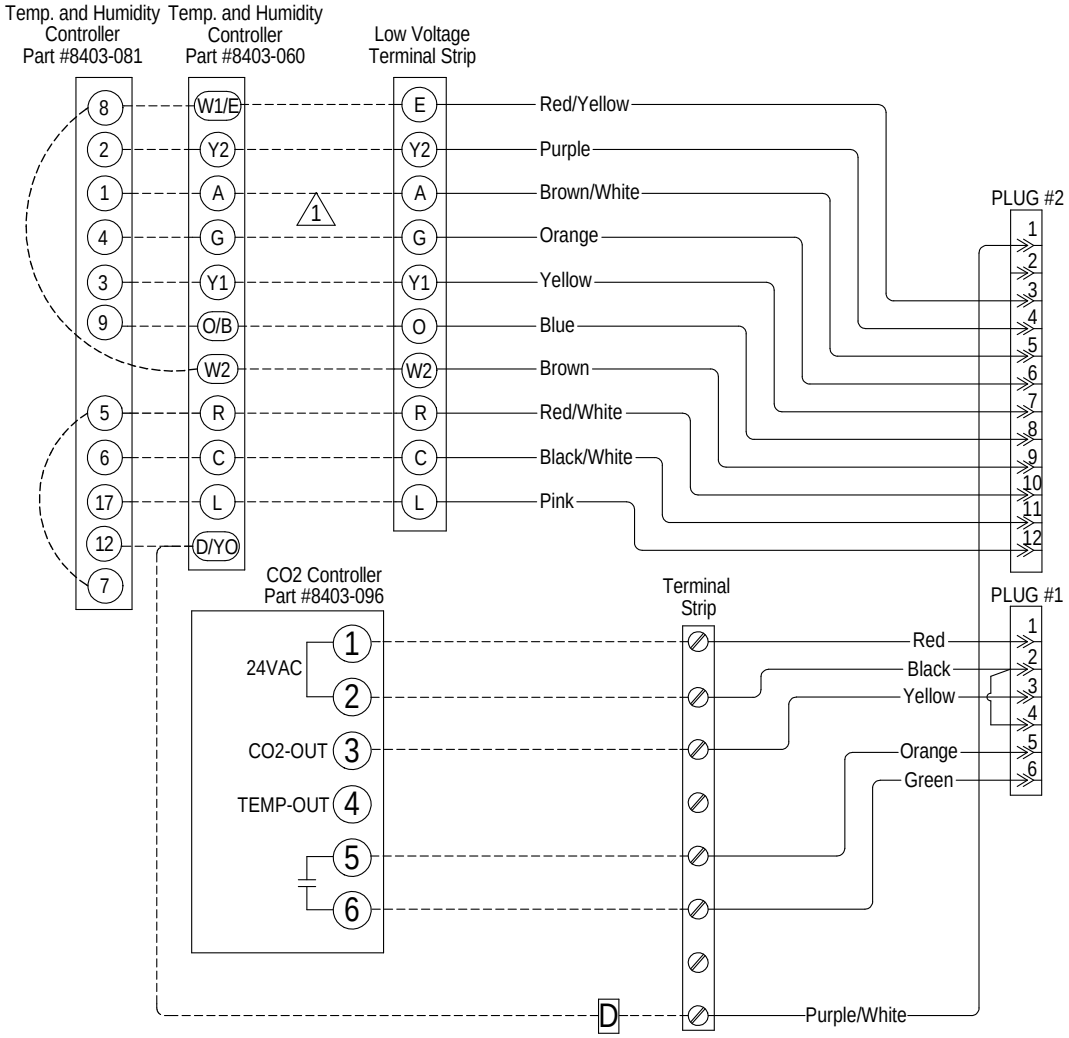

⚠1 FOR ENERGY RECOVERY VENTILATOR WITH CO2 CONTROL, **DO NOT** CONNECT "A" OCCUPANCY INPUT BETWEEN THERMOSTAT AND LOW VOLTAGE TERMINAL STRIP. **DO MAKE** THIS CONNECTION WHEN APPLYING A **COMMERCIAL ROOM VENTILATOR** WITH CO2 CONTROL.

4115-102 F

FIGURE 17
Factory-Mounted Thermostat Wiring Diagram
"D" Thermostat Option

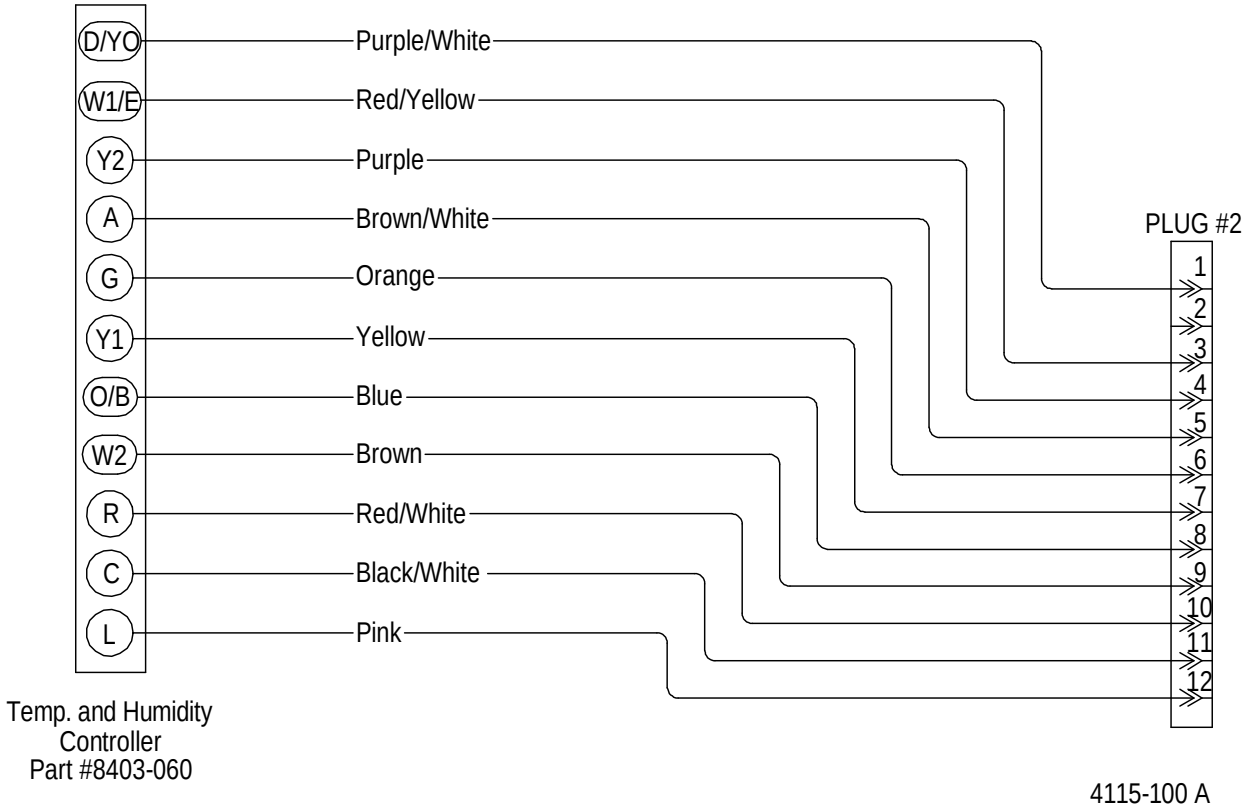

FIGURE 18
Factory-Mounted Thermostat and CO_2 Vent Control Wiring Diagram
"H" Thermostat Option

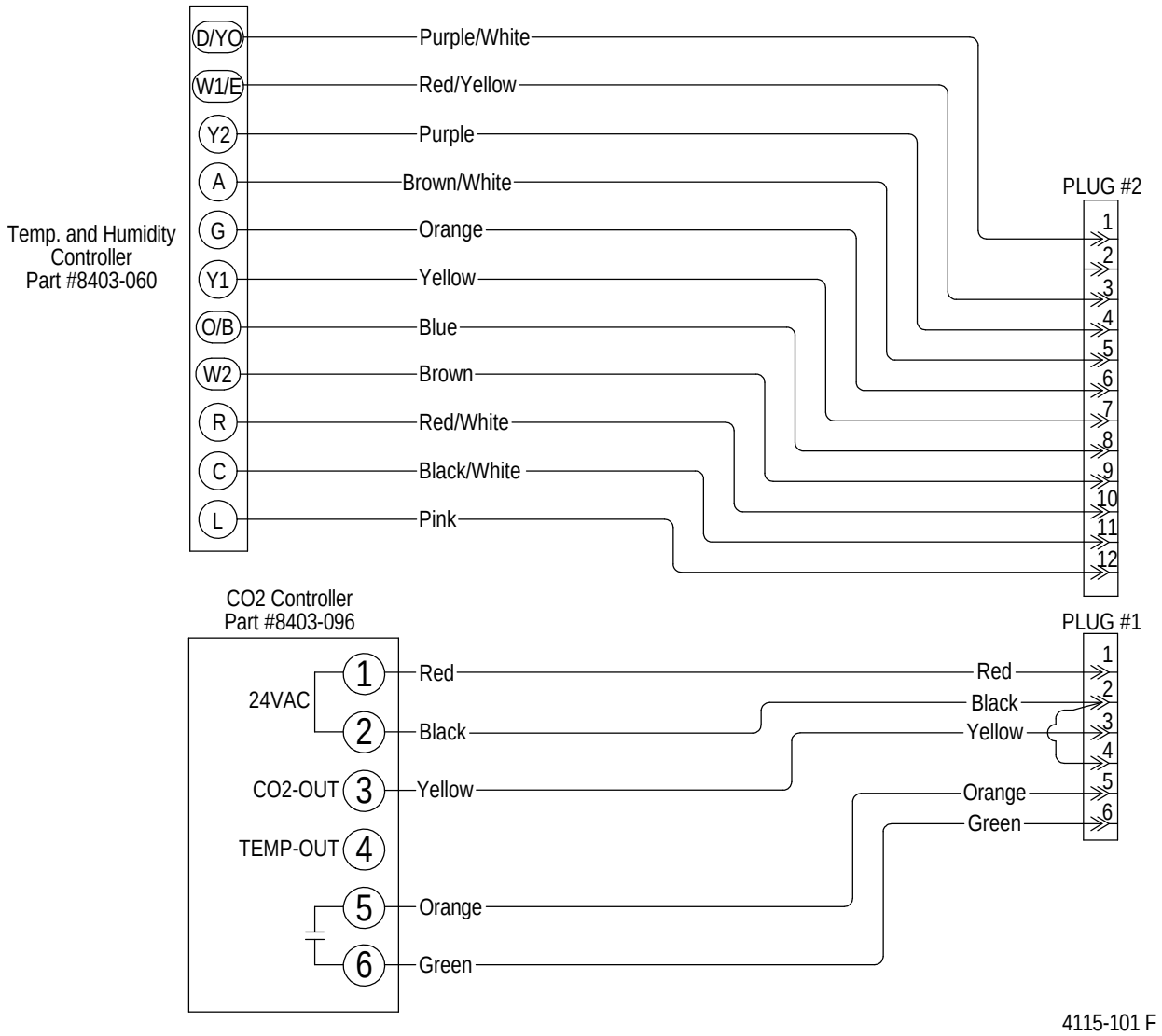

FIGURE 19
Remote Thermostat with Mounted/Wired CO_2 Control Wiring Diagram
"K" Thermostat Option

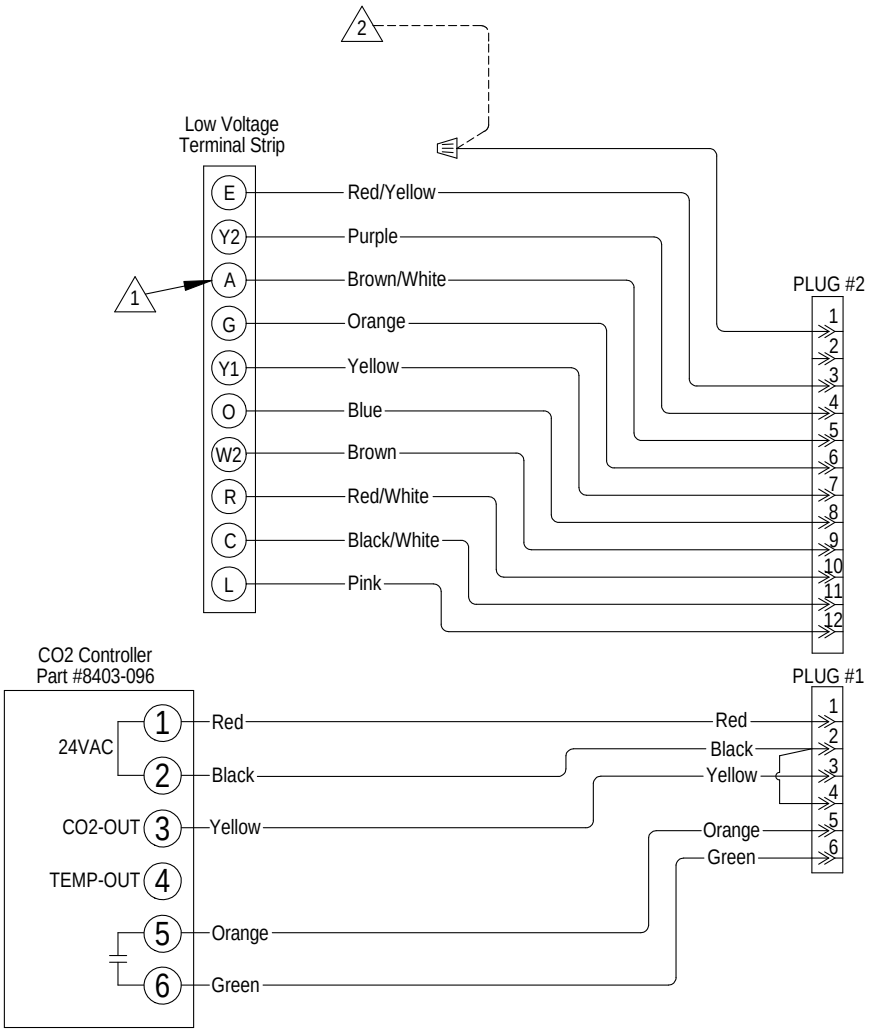

△1 FOR ENERGY RECOVERY VENTILATOR WITH CO2 CONTROL, DO NOT CONNECT "A" OCCUPANCY INPUT BETWEEN THERMOSTAT AND LOW VOLTAGE TERMINAL STRIP. DO MAKE THIS CONNECTION WHEN APPLYING A COMMERCIAL ROOM VENTILATOR WITH CO2 CONTROL.

△2 FOR DEHUMIDIFICATION MODELS (EQUIPPED WITH FACTORY HOT GAS REHEAT) CONNECT SIGNAL FOR HUMIDISTAT TO PURPLE-WHITE WIRE.

4115-105 C

FIGURE 20
Factory-Mounted Completestat™ with Occupancy Sensing and Temperature/Humidity Control "1" & "3" Option Wiring Diagram

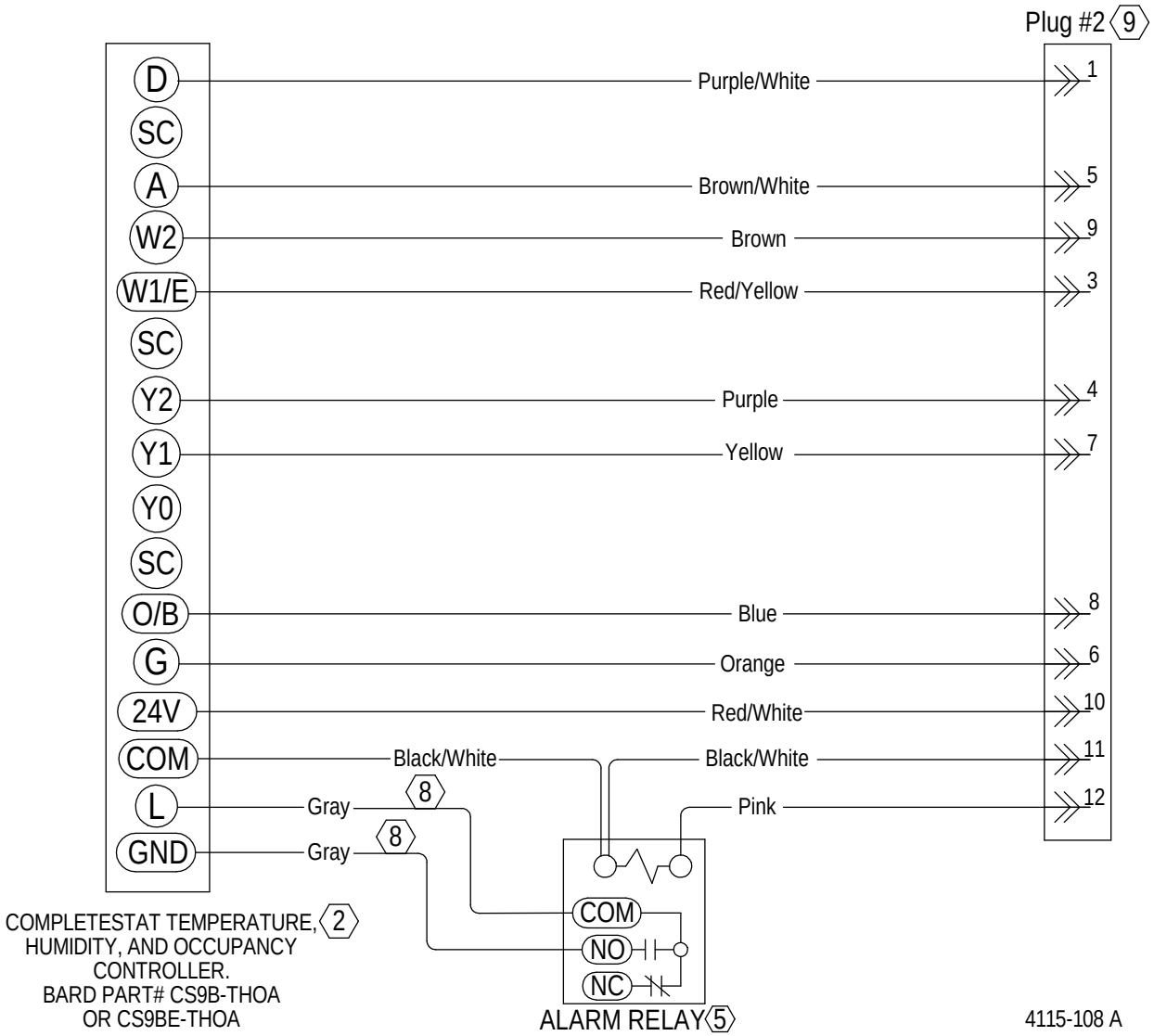

FIGURE 21
Factory-Mounted Completestat™ with Occupancy Sensing and Temperature/Humidity/CO_2 Control "2" & "4" Option Wiring Diagram

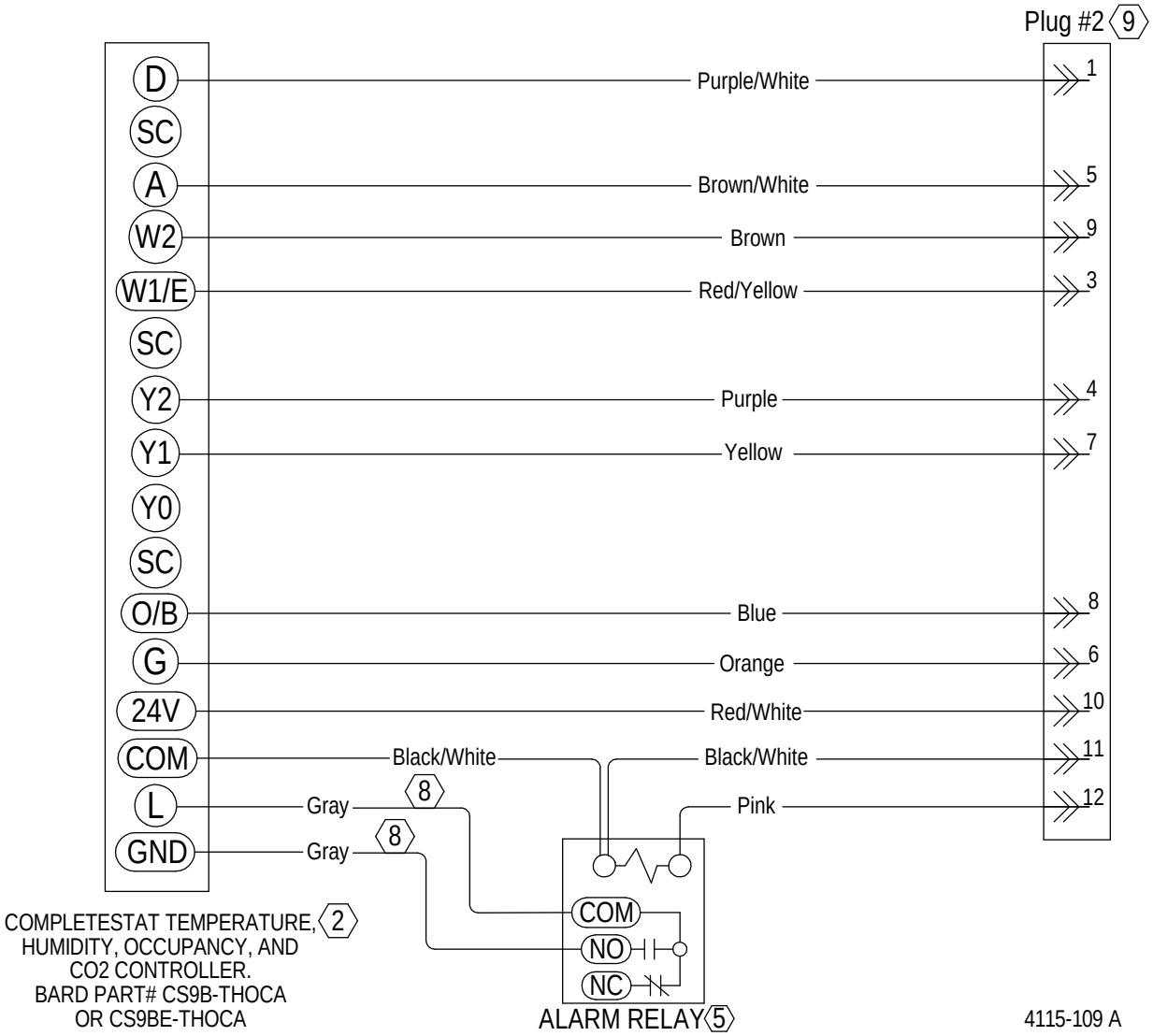

FIGURE 22
Factory-Mounted Completestat™ with Occupancy Sensing and Temperature/Humidity Control "1" & "3" Option Wiring Diagram and Temperature/Humidity/CO_2 Control "2" & "4" Option Wiring Diagram

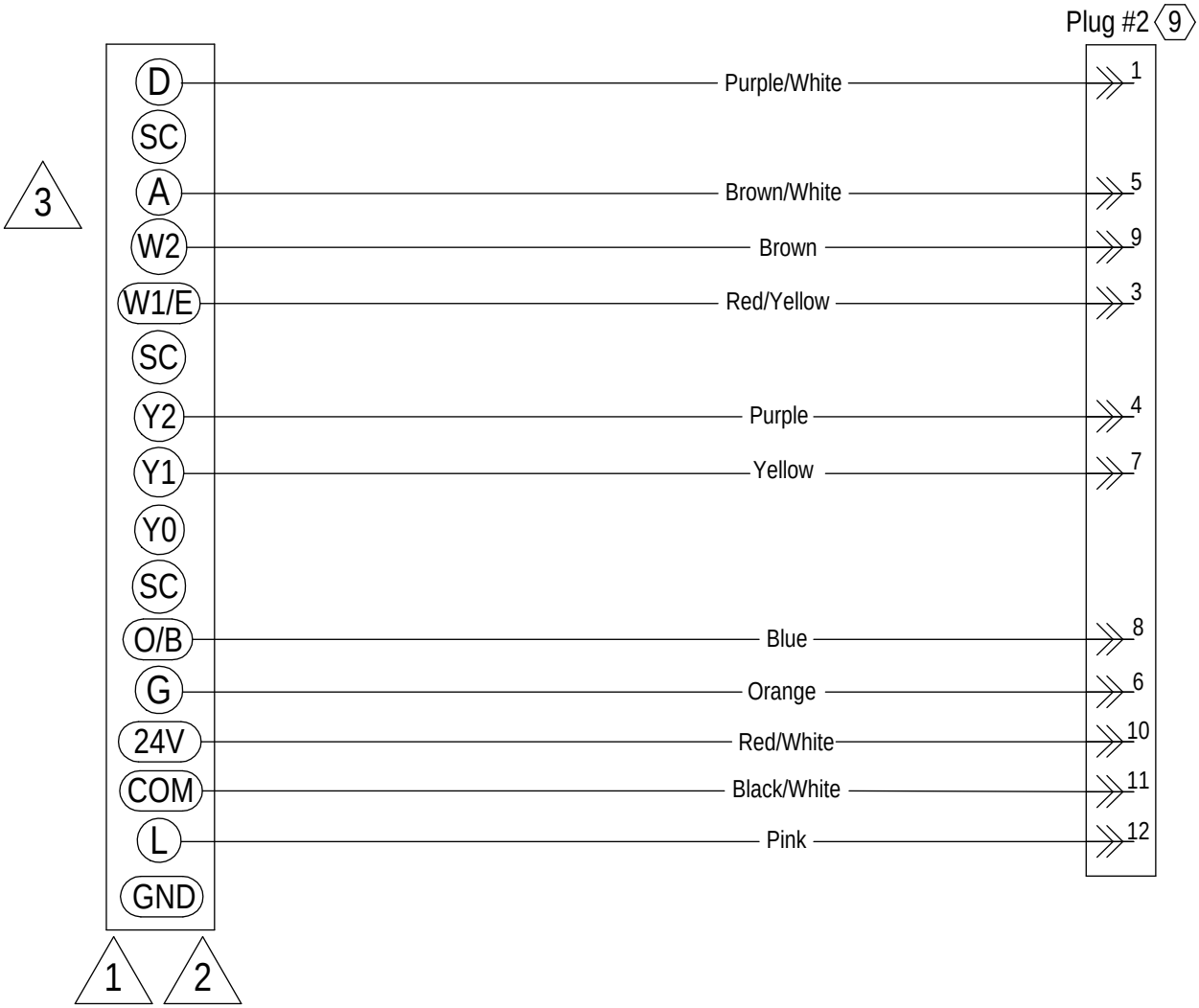

Notes:
1. COMPLETESTAT TEMPERATURE, HUMIDITY, AND OCCUPANCY CONTROLLER. BARD PART# CS9B-THOA OR CS9BE-THOA
2. COMPLETESTAT TEMPERATURE, HUMIDITY, OCCUPANCY, AND CO2 CONTROLLER. BARD PART# CS9B-THOCA OR CS9BE-THOCA
3. Either THOA or THOCA version can be used. For THOA, vent output “A” limits vent operation to occupied periods. For THOCA, vent output “A” operates vent based on CO2 level

4115-119

Valve Installation

1. The valve body may be installed in any orientation, as shown in Figure 23. However, the 3-way actuator's power connections must be over the closed off port to ensure proper function and flow direction.
2. Before mounting body, verify there will be enough clearance for iSeries Smart Actuator to be installed. It is suggested that the iSeries Smart Actuator be installed onto valve before valve is installed. Also, please verify that the nylon washers are installed to avoid leaking.
3. Make sure the ball valve is in the FULL OPEN position. Rotate the manual operation button several times to verify the valve is opening and closing properly.

FIGURE 23
Valve Actuator Orientation

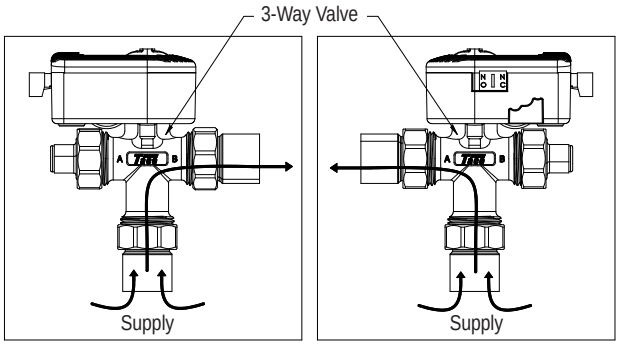

MIS-4134

iSERIES SMART ACTUATOR REMOVAL AND INSTALLATION

1. iSeries Smart Actuator may be attached to the valve body in either direction (see Figure 23). The 3-way actuator's power connections must be over the closed off port to ensure proper function and flow direction.
2. Actuator removal: Remove iSeries Smart Actuator prior to soldering by rotating the actuator counterclockwise approximately 30 degrees and lifting upward approximately 3/4" (see Figure 24).
3. To re-assemble actuator to valve body: Position actuator such that the "D" shaped valve stem aligns properly with the "D" shaped actuator drive cavity *(NOTE: The "D" shaped stem design allows for correct insertion every time*). Next, slide valve stem into actuator cavity and rotate until the actuator slips over the valve's locking posts (see Figure 24). Once the actuator is flush with valve body, turn actuator clockwise and lock into position.

FIGURE 24
iSeries Smart Actuator Removal

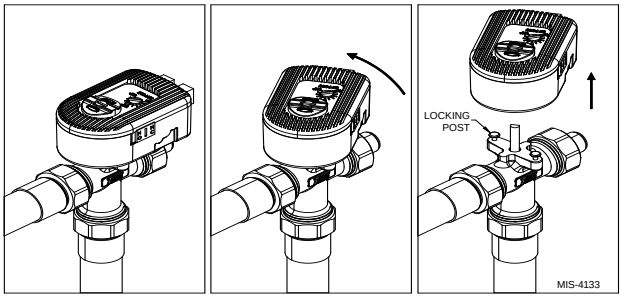

MIS-4133

4. To ensure the actuator will function correctly at start up, there are two checks to conduct.

   First, verify the manual operation button (circular button on top of iSeries Smart Actuator) is in the upmost position. If the button has been manipulated/operated at any point during set-up, the button could be fixed in the manual operation position. To ensure proper operation, manual twist the actuator assembly as shown in Figure 24.

   Secondly, make sure to re-install the terminal blocks/plugs into the back of the actuator after re-installing it. Once power is turned on, there should be a visual indication of power from the green LED, located on the back of the actuator. See **TROUBLESHOOTING WATER MODULATING ACTUATOR DIAGNOSTICS** on page 66 for further troubleshooting.

NOTE All terminals provided with the iSeries Smart Actuator are removable. In order to prevent damage to the electronics, disconnect all plugs before the power is turned on and check voltages and all affected wires. Once the circuits are tested, plug in the terminals. If there is any question about wiring, refer to the wiring diagram.

CAUTION: To prevent electrical shock, disconnect electric power to system at main fuse or circuit breaker box until installation is complete. When a service switch is installed, more than one disconnect switch may be required to de-energize this device for servicing.

Description of Standard Equipment

Low Pressure Switch

NOTE This unit is supplied with two low pressure switches installed, a 55 PSIG and a 75 PSIG.

The 75 PSIG is wired into the system. This switch is suitable for water loop (boiler/tower applications).

To avoid nuisance lockouts for ground loop application with antifreeze, the 75 PSIG switch should be disconnected and connect the 55 PSIG switch.

The leads for both switches are located in the lower electrical connection panel. The switch bodies are marked with pressure settings. The 75 PSIG switch has blue leads. The 55 PSIG switch has yellow leads.

Water Flow Switch

These models are equipped with a water flow switch. It is a magnetic (sealed) switch that closes electrical contacts above 3 gallons per minute. This enables the compressor to shut down in the event of low water flow conditions, thus preventing long-term mechanical issues.

During dehumidification, the water flow switch requirement of 3 gallons per minute is bypassed for purposes of water modulation.

Water Modulating Actuator (iSeries Smart Actuator)

These models are equipped with an iSeries Smart Actuator. The iSeries Smart Actuator is a microprocessor-based valve designed to provide a setpoint (fixed) temperature to an HVAC system by modulating the position of a 3-way mixing valve.

The actuator has two electrical terminals and an illuminated LED status powered by 24VAC. All terminals provided with the iSeries Smart Actuator are removable. The terminals have a label with a description for each position, indicating their use. The slot intended for a boiler is not used.

During dehumidification, the iSeries Smart Actuator is activated. The actuator provides modulation of the valve, in order to control the water flow to help accommodate room comfort during dehumidification.

High Pressure Switch

This unit is equipped with a high pressure switch that will stop the compressor in the event of abnormal high pressure occurrences.

The high and low pressure switches are included in a lockout circuit that is re-settable from the room. In the event of a high or low pressure switch lockout, a visual indication can be seen from the geothermal logic control board. See **Troubleshooting Geothermal Logic CCM** on page 64 for further explanation.

Geothermal Compressor Control Module

When the green status light blinks, this indicates that 24 volt power is applied to the board and the controller is running in normal operation.

On initial power up and call for compressor, a 5-minute delay plus a random start delay of 0 to 60 seconds is applied. After the random delay, the compressor relay is energized (terminal CC). When the Y1 input opens, the compressor de-energizes.

The geothermal compressor control module is standard on all models covered by this manual. It is an anti-short cycle/lockout timer with high pressure, low pressure and flow switch monitoring and alarm output.

After compressor shutdown, or power disruption, a 5-minute timer is applied which prevents the compressor from operating.

Over and Under Voltage Protection

When an under or over voltage condition exists, the controller locks out the unit. When condition clears, the controller automatically releases the unit to normal operation and the compressor restarts after the random start and anti-short cycle timings are met. The under and over voltage protection starts at plus or minus 20% from nominal voltage and returns to operation at plus or minus 10% from nominal voltage. All four LED fault lights will flash when an over or under voltage conditions occurs. The over voltage protection can be disabled by removing the O/V jumper on the logic control board (see Figure 25).

FIGURE 25
Geothermal Compressor Logic Control Board

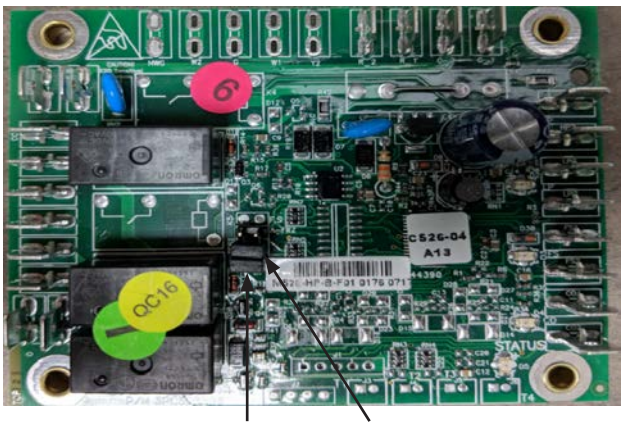

Intelligent Reset

The compressor logic control board has an intelligent reset feature after a safety control is activated. The controller locks out the unit for 5 minutes; at the end of this period, the controller checks to verify that all faults have been cleared. If faults have been cleared, the controller restarts the unit. If a second fault occurs, the controller will lockout the unit until the control is reset by breaking Y signal from thermostat. The last fault will be kept in memory after a full lockout; this is only cleared by cycling the unit power.

Alarm Output

The L terminal has 24 volts applied when a hard lockout occurs. This can be used to drive a fault light or a low voltage relay.

During routine operation of the unit with no power interruptions, the compressor will operate on demand with no delay.

High Pressure Switch and Lockout Sequence

If the high pressure switch opens, the compressor contactor will de-energize immediately. The lockout timer will go into a *soft lockout* and stay in soft lockout until the high pressure switch closes ***and*** the delay on break time has expired. If the high pressure switch opens again in the same operating cycle, the unit will go into *manual lockout* condition and the alarm relay circuit will energize. Recycling the wall thermostat resets the manual lockout.

NOTE Both high and low pressure switch controls are inherently automatic reset devices. The high pressure switch and low pressure switch cut out and cut in settings are fixed by specific heat pump unit model. The lockout feature, both soft and manual, are a function of the compressor logic control board.

Important Installer Note

For improved start up performance, wash the indoor coil with dishwashing detergent.

Phase Monitor

All units with three phase scroll compressors are equipped with a three phase line monitor to prevent compressor damage due to phase reversal.

The phase monitor in this unit is equipped with two LEDs. If the Y signal is present at the phase monitor and phases are correct, the green LED will light and contactor will energize. If phases are reversed, the red fault LED will be lit and compressor operation is inhibited.

If a fault condition occurs, reverse two of the supply leads to the unit. Do not reverse any of the unit factory wires as damage may occur.

Rated CFM

All models covered by this manual are factory set to operate at rated CFM levels as shown in Table 4. Rated CFM is required for ducted applications for maximum performance ratings.

Service Hints

1. Caution user to maintain clean air filters at all times and to not needlessly close off supply air registers. This may reduce airflow through the system which shortens equipment service life as well as increasing operating costs and noise levels.
2. Check all power fuses or circuit breakers to be sure that they are the correct rating.
3. The heat pump wall thermostats perform multiple functions. Be sure that all function switches are correctly set for the desired operating mode before trying to diagnose any reported service problems.

TABLE 4
Indoor Blower Performance

MODEL	RATED ESP	MAX. ESP ①	CONTINUOUS AIRFLOW ③	RATED 1st STAGE ②	RATED 2nd STAGE ②
QW2S3	0.10	0.5	800	800	950
QW3S3	0.15	0.5	800	900	1150
QW4S3	0.20	0.5	900	1200	1450
QW5S3	0.20	0.5	900	1400	1650

NOTE: *These units are equipped with a variable speed (ECM) indoor motor that automatically adjusts itself to maintain approximately the same rate of indoor airflow in both heating and cooling, dry and wet coil conditions, and at both 230/208 or 460 volts.*

① Maximum ESP (inches WC) shown is with 2" MERV 8 pleated filter.

② Rated CFM for ducted applications – required for maximum performance rating.

③ Continuous CFM the total airflow being circulated during continuous blower operation.

Adjustments

FIGURE 26
CO_2 Control Configuration

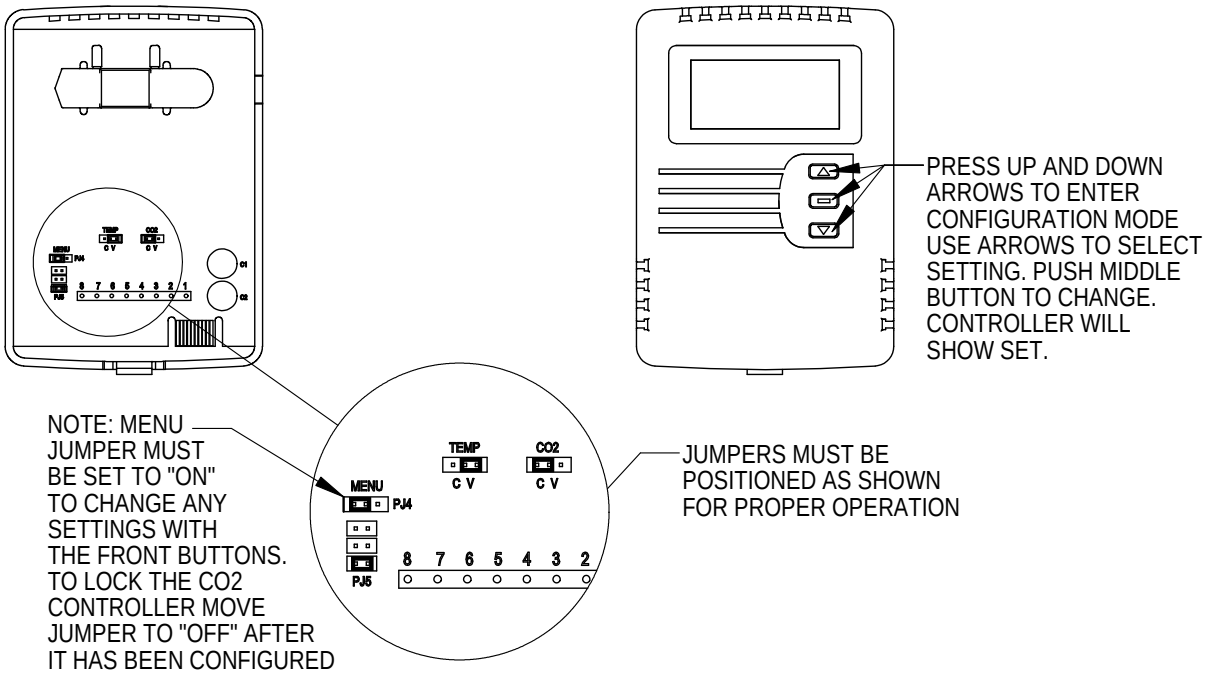

4-20mA	AN (ppm)	Damper (1)	Approc. Blade Position (2)
4	700	FULLY CLOSED	0
5	750		1
6	800		2
7	850		3
8	900		4
9	950		5
10	1000		6
11	1050		7
12	1100		8
13	1150		9
14	1200		10
15	1250		11
16	1300		12
17	1350		14
18	1400		15
19	1450		16
20	1500	FULLY OPEN	17

Settings	Recommended	Default
RON	Not Used	
ROF	Not Used	
DSP	C	CT
UNI	US	US
COL	700	0
COH	1500	2000
TOL	Not Used	
TOH	Not Used	
BAR	See Instrution with Controller For High Altitude Installations	
CAL	Used for Field Calibration	

(1) Damper should be fully closed at 700 ppm, if not Potentiometer R7 can be adjusted clockwise (CW) to close it. If it is fully closed at 700 ppm or lower no adjustments required.
(2) Blade as referenced to the Blade Position Label.

MIS-3009A

Pressure Service Ports

High and low pressure service ports are installed on all units so that the system operating pressures can be observed. Pressure charts are located on the backside of the units lower service door, as well as in Table 5 on page 38. It is imperative to match the correct pressure chart to the unit by model number. All upper service doors must be attached to obtain proper reading. The service ports are in the lower compressor section on the tubing adjacent to the compressor.

This unit employs high-flow Coremax valves instead of the typical Shrader-type valves.

WARNING! Do NOT use a Schrader valve core removal tool with these valves. Use of such a tool could result in eye injuries or refrigerant burns!

To change a Coremax valve without first removing the refrigerant, a special tool is required which can be obtained at www.fastestinc.com/en/SCCA07H. See the replacement parts manual for replacement core part numbers.

Piping Access to Unit

Water piping to and from the coaxial water coil is intended to enter/exit the unit through the rectangular hole. See Figures 1 (page 8), 8A (page 14), 27 (page 36) and 28 (page 37). The connections on the water coil are a double O-ring with a retainer nut that secures it in place.

Various double O-ring fittings are available to make it possible to connect to the coaxial coil with various methods and materials. The methods include 1" barbed fittings (straight and 90°), 1" MPT (straight and 90°), and 1¼" hot fusion fitting with P/T fitting). (See Table 6 on page 39.)

NOTE All double O-ring fittings require "hand tightening only". Do not use a wrench or pliers as retainer nut can be damaged with excessive force. Avoid cross-threading the nut.

NOTE Apply petroleum jelly to O-rings to prevent damage and aid in insertion.

System Start Up

Step 1 – Close disconnect switch(es) and set the thermostat to cool and temperature to the highest setting.

Step 2 – Check for proper airflow across the indoor coil.

Step 3 – Connect the service gauges and allow the unit to run for at least 10 minutes or until pressures are stable. Check pressures to the system pressure table attached to the unit service panel.

Step 4 – Fill out Ground Source Heat Pump Performance Report.

FIGURE 27
Fluid Connections on Unit with Ventilation Wall Sleeve

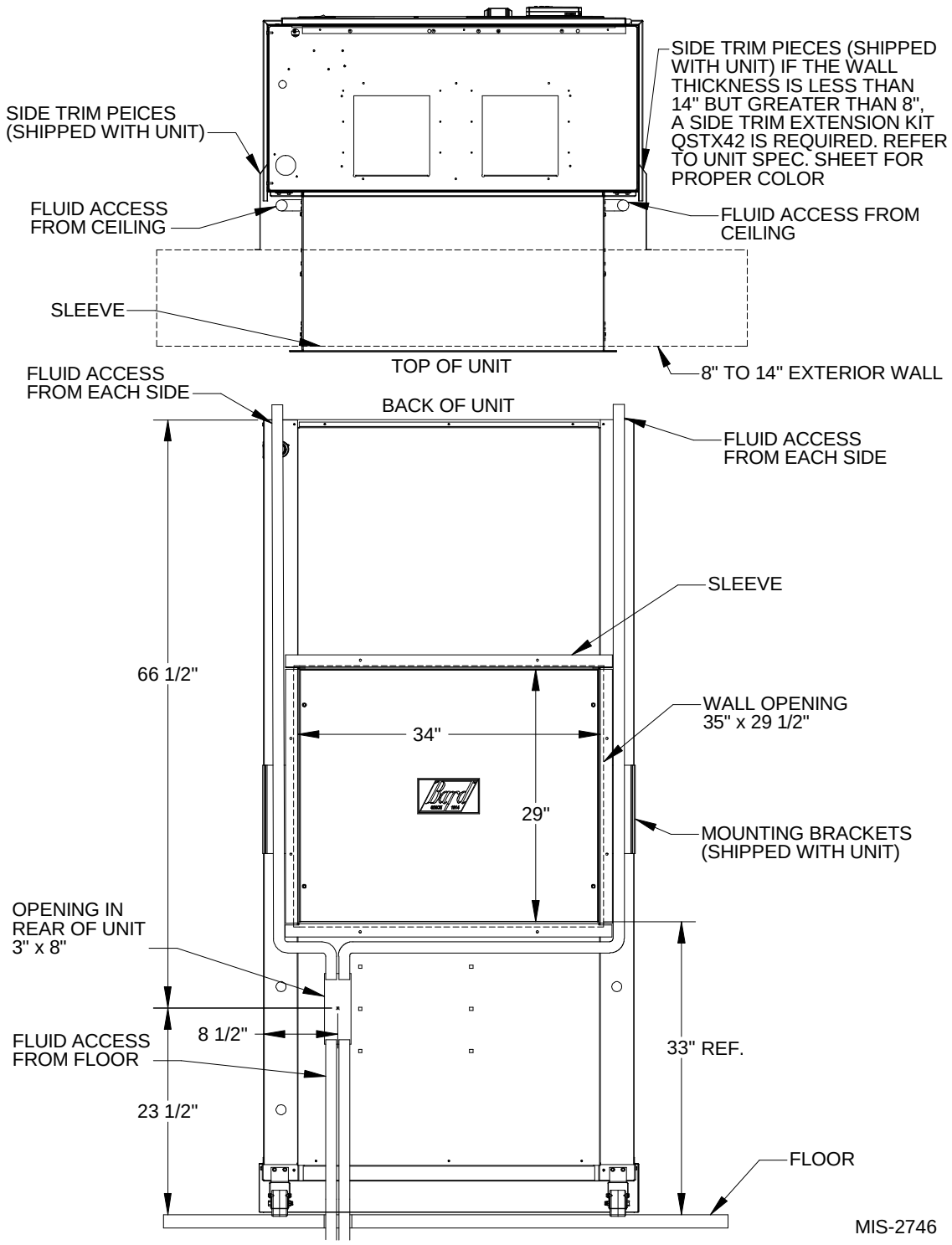

FIGURE 28
Fluid Connections on Unit without Ventilation Wall Sleeve

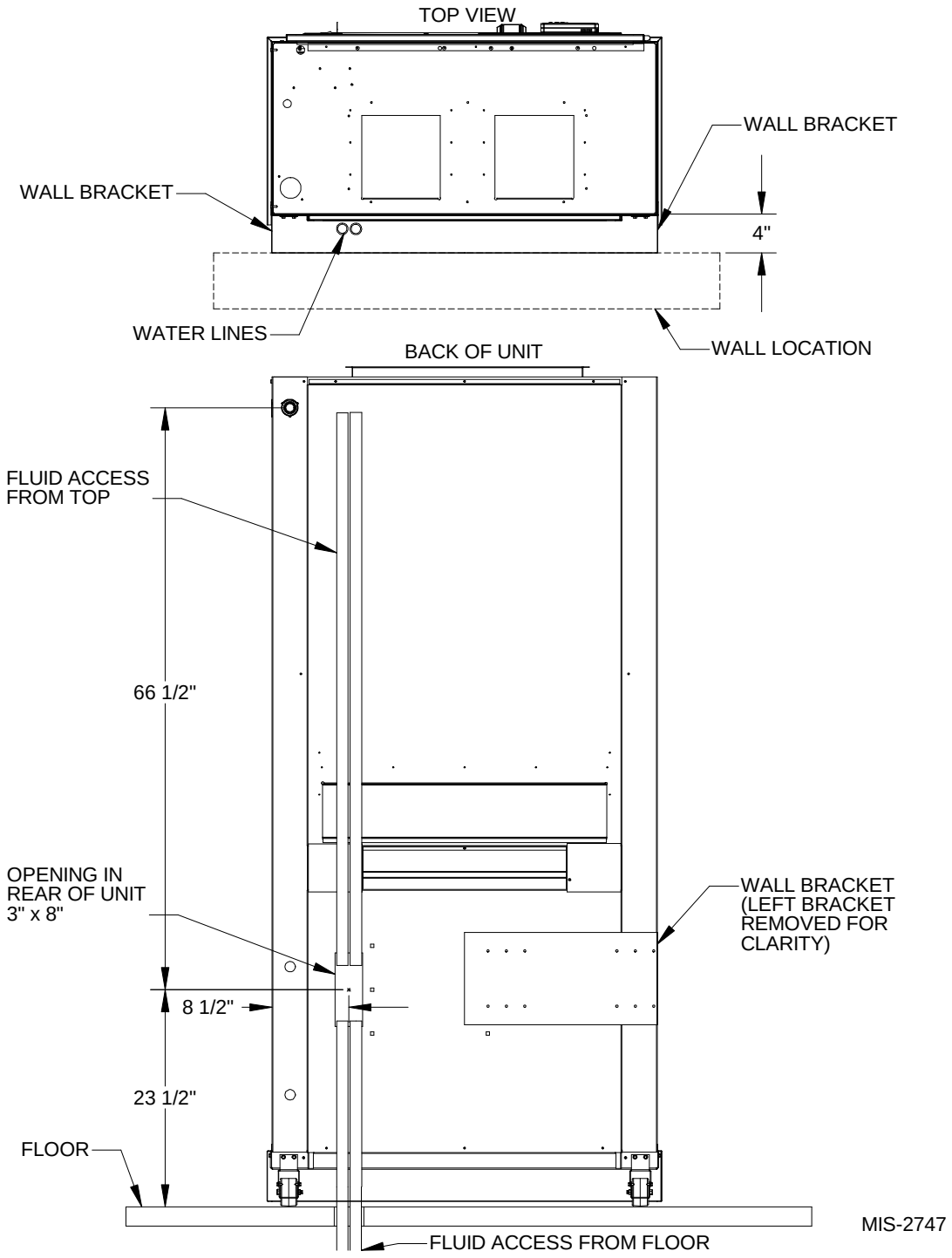

TABLE 5
Pressure Table

Model	Return Air Temperature	Pressure	FULL LOAD COOLING – Fluid Temperature Entering Water Coil °F																
			30°F	35°F	40°F	45°F	50°F	55°F	60°F	65°F	70°F	75°F	80°F	85°F	90°F	95°F	100°F	105°F	110°F
QW2S	75° DB 62° WB	Low Side	105	107	110	112	114	117	119	122	124	127	129	131	134	136	139	141	144
		High Side	131	145	160	175	187	206	220	239	259	278	298	317	337	356	376	396	415
	80° DB 67° WB	Low Side	112	115	117	120	122	125	128	130	133	135	138	141	143	146	148	151	154
		High Side	134	149	164	179	191	211	225	245	265	285	306	326	346	366	386	406	426
	85° DB 72° WB	Low Side	120	123	126	129	132	134	137	140	143	146	148	151	154	157	160	162	165
		High Side	139	154	170	186	198	219	233	254	275	295	316	337	358	378	399	420	441
QW3S	75° DB 62° WB	Low Side	83	89	95	100	105	109	113	118	119	120	121	122	123	124	125	126	127
		High Side	132	146	161	176	193	209	227	243	265	286	308	329	351	372	394	415	437
	80° DB 67° WB	Low Side	89	96	102	107	112	117	121	126	127	128	129	130	131	132	133	134	136
		High Side	135	150	165	181	197	215	233	249	271	293	316	338	360	382	404	426	448
	85° DB 72° WB	Low Side	96	103	109	115	121	126	130	136	137	138	139	140	141	142	143	145	146
		High Side	140	155	171	187	204	222	241	258	281	304	327	349	372	395	418	441	464
QW4S	75° DB 62° WB	Low Side	91	96	101	105	109	112	115	119	120	121	121	122	122	123	124	124	125
		High Side	146	159	173	187	203	219	236	251	273	294	316	338	359	381	403	424	446
	80° DB 67° WB	Low Side	97	102	108	112	116	120	123	127	128	129	130	130	131	132	132	133	134
		High Side	150	163	177	192	208	225	242	258	280	302	324	346	369	391	413	435	458
	85° DB 72° WB	Low Side	104	110	116	121	125	129	132	137	138	139	139	140	141	142	142	143	144
		High Side	155	169	184	199	215	233	251	267	290	313	336	359	382	405	428	451	474
QW5S	75° DB 62° WB	Low Side	92	95	98	101	104	107	111	112	113	114	115	116	117	118	119	120	121
		High Side	147	162	177	193	209	227	239	260	282	303	324	345	366	387	408	429	450
	80° DB 67° WB	Low Side	98	102	105	108	111	114	119	120	121	122	123	124	125	126	127	128	130
		High Side	151	166	182	198	215	232	245	267	289	310	332	354	375	397	419	440	462
	85° DB 72° WB	Low Side	105	109	113	117	120	123	128	129	130	131	132	133	135	136	137	138	139
		High Side	156	172	188	205	222	240	254	276	299	321	344	366	388	411	433	456	478

Model	Return Air Temperature	Pressure	FULL LOAD HEATING – Fluid Temperature Entering Water Coil °F																
			5°F	10°F	15°F	20°F	25°F	30°F	35°F	40°F	45°F	50°F	55°F	60°F	65°F	70°F	75°F	80°F	85°F
QW2S	70° DB	Low Side	39	48	56	64	73	81	89	97	106	114	123	131	140	149	158	167	175
		High Side	266	275	283	292	301	310	318	327	336	345	353	362	371	380	389	397	406
QW3S	70° DB	Low Side	34	43	51	60	68	77	85	94	102	110	121	131	142	152	162	173	183
		High Side	279	290	302	313	324	335	346	357	368	379	392	405	417	430	442	455	467
QW4S	70° DB	Low Side	30	38	46	54	63	71	79	87	95	103	114	124	134	144	154	165	175
		High Side	272	285	297	310	322	335	347	360	372	385	398	410	423	436	449	462	475
QW5S	70° DB	Low Side	36	44	51	59	67	75	82	90	98	106	115	125	134	143	153	162	172
		High Side	265	278	291	304	317	330	343	356	369	382	394	405	417	429	441	453	465

Model	Return Air Temperature	Pressure	PART LOAD COOLING – Fluid Temperature Entering Water Coil °F																
			30°F	35°F	40°F	45°F	50°F	55°F	60°F	65°F	70°F	75°F	80°F	85°F	90°F	95°F	100°F	105°F	110°F
QW2S	75° DB 62° WB	Low Side	105	110	115	119	124	128	134	135	137	139	140	142	143	145	146	148	149
		High Side	120	134	149	164	179	188	208	227	246	265	284	303	322	342	361	380	399
	80° DB 67° WB	Low Side	112	118	123	128	132	136	143	145	146	148	150	152	153	155	157	158	160
		High Side	123	137	152	168	184	193	213	233	252	272	291	311	331	350	370	390	409
	85° DB 72° WB	Low Side	120	126	132	137	142	147	154	156	157	159	161	163	165	166	168	170	172
		High Side	127	142	158	174	190	200	220	241	261	281	302	322	342	363	383	403	424
QW3S	75° DB 62° WB	Low Side	98	104	109	113	117	121	124	129	130	130	131	132	133	133	134	135	135
		High Side	124	137	150	164	179	195	211	226	246	266	287	307	328	348	369	389	409
	80° DB 67° WB	Low Side	105	111	116	121	126	130	133	138	139	139	140	141	142	143	143	144	145
		High Side	127	140	154	168	184	200	216	231	252	273	294	315	336	357	378	399	420
	85° DB 72° WB	Low Side	113	119	125	130	135	139	143	148	149	150	151	151	152	153	154	155	156
		High Side	131	145	159	174	190	207	224	239	261	283	304	326	348	370	391	413	435
QW4S	75° DB 62° WB	Low Side	104	108	112	116	119	122	125	129	130	131	131	132	133	134	135	136	137
		High Side	129	142	155	170	185	201	217	232	252	273	293	314	334	355	375	396	416
	80° DB 67° WB	Low Side	111	116	120	124	128	131	134	138	139	140	141	142	143	144	145	146	147
		High Side	132	145	159	174	190	206	223	238	259	280	301	322	343	364	385	406	427
	85° DB 72° WB	Low Side	119	124	129	133	137	141	144	148	149	150	151	152	153	154	155	156	158
		High Side	137	150	165	180	196	213	231	246	268	290	311	333	355	377	398	420	442
QW5S	75° DB 62° WB	Low Side	108	111	114	116	118	120	124	124	125	126	126	127	127	128	129	129	130
		High Side	133	146	160	175	191	207	219	239	259	280	300	321	341	362	382	403	423
	80° DB 67° WB	Low Side	116	119	122	124	127	129	132	133	134	134	135	136	136	137	138	138	139
		High Side	136	150	164	180	196	212	224	245	266	287	308	329	350	371	392	413	434
	85° DB 72° WB	Low Side	125	128	131	134	136	138	142	143	144	144	145	146	147	147	148	149	149
		High Side	141	155	170	186	202	220	232	254	275	297	319	341	362	384	406	428	449

Model	Return Air Temperature	Pressure	PART LOAD HEATING – Fluid Temperature Entering Water Coil °F																
			5°F	10°F	15°F	20°F	25°F	30°F	35°F	40°F	45°F	50°F	55°F	60°F	65°F	70°F	75°F	80°F	85°F
QW2S	70° DB	Low Side	22	33	44	54	65	76	87	97	108	119	128	137	146	154	163	172	181
		High Side	233	243	253	262	272	282	291	301	311	320	328	336	343	351	359	366	374
QW3S	70° DB	Low Side	38	47	56	65	74	83	92	101	110	119	130	141	152	163	174	185	196
		High Side	257	267	277	287	297	307	317	327	337	347	358	370	381	392	403	414	425
QW4S	70° DB	Low Side	34	43	51	60	69	77	86	94	103	112	123	134	145	155	166	177	188
		High Side	258	267	276	285	294	304	313	322	331	340	351	362	372	383	394	405	415
QW5S	70° DB	Low Side	38	47	55	64	72	81	89	98	107	115	125	135	145	155	165	176	186
		High Side	250	260	271	282	292	303	313	324	335	345	356	367	378	388	399	410	420

The data in the above pressure chart is based on the following flow rates:

FLOW RATE FOR VARIOUS FLUIDS	QW2S3	QW3S3	QW4S3	QW5S3
Flow rate required GPM for fresh water	6	8	9	10
Flow rate required GPM for 15% Methanol	7	8	9	9

TABLE 6
Optional Accessories

Optional Accessories – Must be Used for Each Installation with Ventilation Options

Ventilation Wall Sleeves:

QWVS42	Ventilation wall sleeve for walls up to 14 inches thick.	NOTE: Unless they are to be field-supplied, side trim kit must be ordered for all installations.

Ventilation Louvers:

QLG-11	Clear Anodized Aluminum for vent option
QLG-21	Medium Bronze Anodized for vent option
QLG-31	Dark Bronze Anodized Aluminum for vent option

Side Trim Kits — Required for All Installations Unless Field-Supplied

NOTE: **The following accessory items must be selected so the finish (color) is matched to the QWS model that they will be used with.**

Side Trim Extension Kits:

Model	Color	Model	Color	Model	Color	Space from back of unit to wall	Unit Compatibility
QSTX-V-6	Platinum Vinyl	QSTX-4-6	Gray Paint	QSTX-X-6	Beige Paint	4" to 6"	All
QSTX-V-8	Platinum Vinyl	QSTX-4-8	Gray Paint	QSTX-X-8	Beige Paint	6" to 8"	All
QSTX-V-10	Platinum Vinyl	QSTX-4-10	Gray Paint	QSTX-X-10	Beige Paint	8" to 10"	All
QSTX-V-12	Platinum Vinyl	QSTX-4-12	Gray Paint	QSTX-X-12	Beige Paint	10" to 12"	All

Optional Accessories – Additional Items as Determined by Job Specifications

Free-Blow Plenum Boxes:							***Unit Compatibility***
QPB42-V	Platinum Vinyl	QPB42-4	Gray Paint	QPB42-X	Beige Paint	Front Supply, 4-way deflection grille	QW2S, QW3S
QPBS42-V	Platinum Vinyl	QPBS42-4	Gray Paint	QPBS42-X	Beige Paint	Same as QPB42, plus 2-way defection grille on each side.	
QPB48-V	Platinum Vinyl	QPB48-4	Gray Paint	QPB48-X	Beige Paint	Front Supply, 4-way deflection grille	QW4S, QW5S
QPBS48-V	Platinum Vinyl	QPBS48-4	Gray Paint	QPBS48-X	Beige Paint	Same as QPB48, plus 2-way defection grille on each side.	
Top Fill Systems for Finishing Plenum Boxes to Ceilings:							***Unit Compatibility***
QPBX42-9-V	Platinum Vinyl	QPBX42-9-4	Gray Paint	QPBX42-9-X	Beige Paint	Use with QPB42 or QPBS42 (adjusts to ceilings up to 9'9"")	QW2S, QW3S
QPBX42-10-V	Platinum Vinyl	QPBX42-10-4	Gray Paint	QPBX42-10-X	Beige Paint	Use with QPB42 or QPBS42 (adjusts to ceilings up to 10'5"")	
QPBX48-9-V	Platinum Vinyl	QPBX48-9-4	Gray Paint	QPBX48-9-X	Beige Paint	Use with QPB48 or QPBS48 (adjusts to ceilings up to 9'9"")	QW4S, QW5S
QPBX48-10-V	Platinum Vinyl	QPBX48-10-4	Gray Paint	QPBX48-10-X	Beige Paint	Use with QPB48 or QPBS48 (adjusts to ceilings up to 10'5"")	
Cabinet Extensions for Ducted Applications:							***Unit Compatibility***
QCX10A-V	Platinum Vinyl	QCX10A-4	Gray Paint	QCX10A-X	Beige Paint	20" height (adjusts for ceilings up to 9'7"; add QPBX42-9 for 9'7" to 10'3" finished ceiling heights)	QW2S, QW3S
QCX15A-V	Platinum Vinyl	QCX15A-4	Gray Paint	QCX15A-X	Beige Paint	20" height (adjusts for ceilings up to 9'7"; add QPBX48-9 for 9'7" to 10'3" finished ceiling heights)	QW4S, QW5S
Hot Water Coils with Plenum Boxes:							
QPBHW42-F-V	Platinum Vinyl	QPBHW42-F-4	Gray Paint	QPBHW42-F-X	Beige Paint	Free blow plenum box	QW2S, QW3S
QPBHW48-F-V	Platinum Vinyl	QPBHW48-F-4	Gray Paint	QPBHW48-F-X	Beige Paint	Free blow plenum box	QW4S, QW5S
QPBHW42-D-V	Platinum Vinyl	QPBHW42-D-4	Gray Paint	QPBHW42-D-X	Beige Paint	Ducted plenum box	QW2S, QW3S
QPBHW48-D-V	Platinum Vinyl	QPBHW48-D-4	Gray Paint	QPBHW48-D-X	Beige Paint	Ducted plenum box	QW4S, QW5S

NOTE: **The same top fill system and cabinet extensions can be used with hot water coil plenum boxes as with standard plenum boxes.**

Cooling

A 24V solenoid coil on the reversing valve controls the cooling cycle operation. There are two different thermostat options: One allows for “Auto” changeover from cycle to cycle and the other is "Manual" changeover. The Auto changeover mode will cause the reversing valve solenoid to cycle with each cooling call and may cause a “swooshing sound” with refrigerant equalization at the end of each cycle.

Part Load Cooling

On a call for Part Load Cooling by the thermostat, it completes a circuit from R to Y1, O and G for part load cooling. Y1 starts the compressor, O energizes the reversing valve and G starts the indoor blower.

Full Load Cooling

On a call for Full Load Cooling by the thermostat, it completes the same as Part Load Cooling above, but also includes a signal to Y2. Signal Y2 energizes the staging solenoid on the side of the compressor and the signal also goes to the indoor blower to ramp-up the airflow.

Heating

Part Load Heating

On a call for Part Load Heating by the thermostat, it completes a circuit from R to Y1 and G. Y1 starts the compressor and G starts the indoor blower.

Full Load Heating

On a call for Full Load Heating by the thermostat, it completes the same as Part Load Heating above, but also includes a signal to Y2. Signal Y2 energizes the staging solenoid on the side of the compressor and the signal also goes to the indoor blower to ramp-up the airflow.

Geothermal Logic Control

When the green status light blinks, this indicates that 24 volt power is applied to the board and the controller is running in normal operation.

On initial power up and call for compressor, a 5-minute delay plus a random start delay of 0 to 60 seconds is applied. After the random delay, the compressor relay is energized (terminals CC and CCG). When the Y input opens, the compressor de-energizes.

NOTE *The time delay and random start can be disabled by removing the Test jumper on the geothermal logic control board. However, this is not recommended. This is only intended to be a function for factory run-in processes.*

Alarm Output

The L terminal has 24 volts applied when a hard lockout occurs. This can be used to drive a fault light or low voltage relay.

NOTE *Both high and low pressure switch controls are inherently automatic reset devices. The high pressure switch and low pressure switch cut out and cut in settings are fixed by specific heat pump model. The lockout features, both soft and manual, are a function of the compressor logic control board.*

Freeze Stat

When the Y signal is sent to the logic control board, the signal will travel from the dehum board through the freeze stat and give 24 volt power at the Y1 terminal of the compressor logic control board. Following that, the output will energize 10 seconds prior to CC output that starts the compressor.

Anti-Short Cycle Timer

After compressor shutdown or power disruption, a 5-minute timer is applied which prevents the compressor from operating.

High Pressure Switch

(Terminals HP1 and HP2) Circuit will be proved as "closed" prior to energizing A or CC terminals. If pressure switch opens, compressor will go into soft lockout mode and compressor operation will be terminated; green fault light will be illuminated. Logic control will then go through 5-minute delay on break plus random start sequence. If no fault is found on next run cycle, compressor will continue operation. If fault reoccurs, a hard lockout will be initiated and fault signal is sent to L terminal.

Low Pressure Switch

(Terminals LP1 and LP2) Circuit will be proved as "closed" prior to energizing A or CC terminals. The conditions of the LP terminals will then be ignored for the first 90 seconds after a demand for compressor operation. Following this 90-second period, if pressure switch opens, compressor will go into soft lockout mode and compressor operation will be terminated; orange fault light illuminated. The control board will then go through a 5-minute delay on break plus random start sequence. If no fault is found on next run cycle, compressor will continue operation. If fault reoccur, hard lockout occurs, and fault signal is sent to L terminal.

Flow Switch

(Terminals FS and FS2) Circuit will be proved as "closed prior to energizing CC terminal. If flow switch opens, compressor will go into soft lockout mode and

compressor operation will be terminated; red fault light illuminated. Logic control will then go through 5-minute delay on break plus random start sequence. If no fault occurs on next run cycle, compressor will continue operation. If fault reoccurs, hard lockout occurs and fault signal is sent to L terminal.

NOTE Jumper wire is factory installed.

Over and Under Voltage Protection

When an under or over voltage condition exists, the controller locks out the unit. When condition clears, the controller automatically releases the unit to normal operation and the compressor restarts after the random start and anti-short cycle timings are met. The under and over voltage protection starts at plus or minus 20% from nominal voltage and returns to operation at plus or minus 10% from nominal voltage. All four LED fault lights will flash when an over or under voltage conditions occurs.

NOTE The over voltage protection can be disabled by removing the O/V jumper on the geothermic logic control board (see Figure 29).

FIGURE 29
Geothermal Compressor Logic Control Board Jumper Designations

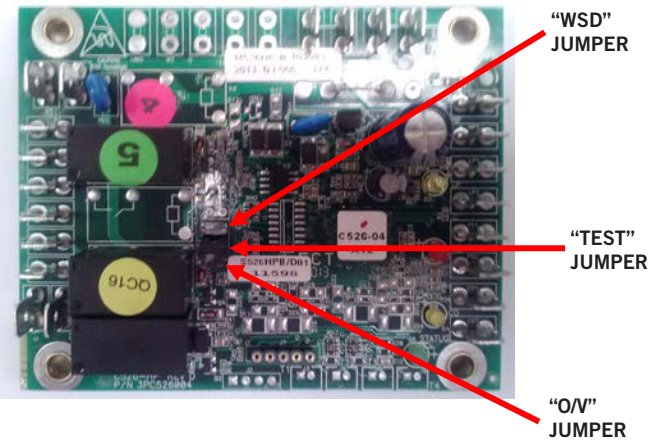

Intelligent Reset

The geothermic logic control has an intelligent reset feature after a safety control is activated. The controller locks out the unit for 5 minutes; at the end of this period, the controller checks to verify that all faults have been cleared. If faults have been cleared, the controller restarts the unit. If a second fault occurs, the controller will lockout the unit until the control is reset by breaking Y signal from thermostat. The last fault will be kept in memory after a full lockout; this is only cleared by cycling the unit power.

Modulating Water Line Control

On a call for cooling or heat pump (Y signal from thermostat), the Y terminal has 24 volts applied and YO output is energized. See Figure 30.

On a call for dehumidification (D signal from thermostat, with no Y signal from thermostat), the D terminal (input) is energized. Concurrently, the TWV (3-way valve) terminal is energized.

When D is energized with no Y signal, the thermistor connected to the board will start measuring the supply air temperature at the leaving side of the indoor blower. The board will modulate the water valve through a signal sent from the SU and SC terminals to the valve actuator.

When a cooling/heating call becomes active while the system is operating in dehumidification mode, the cooling/heating call becomes the default state. The modulating water line board will have 24VAC at the Y terminal starting a 75-second time delay. The time delay will have to expire before the YO cooling/heating signal becomes active. The purpose of the time delay is to ensure the modulating valve is "full open" before allowing the YO signal out of the board to initiate cooling/ heating.

See **TROUBLESHOOTING MODULATING WATER LINE CONTROL BOARD** on page 67 for further information on modulating water line control.

FIGURE 30
Modulating Water Line Control Board

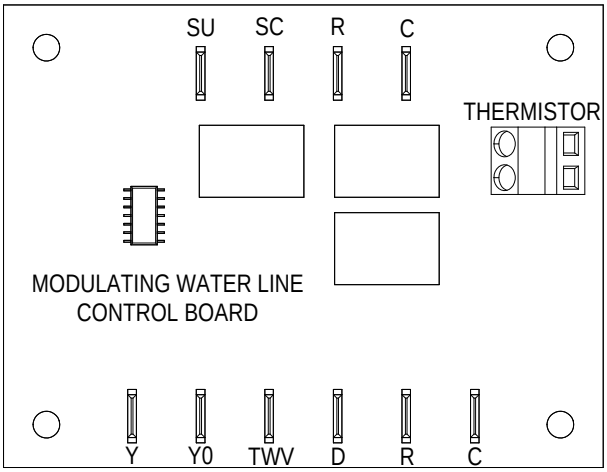

MIS-4140

iSERIES Smart Actuator

Power Up and Dehum Request

Whenever the iSeries-S is powered up, the LED turns green and the control starts operation (see Figure 31). The power to the iSeries Smart Actuator is being supplied through the sensor side of the R and C of the modulating water line board. The supply sensor (SU) and sensor common (SC) inputs are also being supplied by the modulating water line board when the unit is operating in dehumidification.

Based on the temperature, which is measured by the resistance being supplied by the thermistor/sensor, the SU and SC terminals of the modulating water line board will send a signal to the iSeries Smart Actuator. The iSeries Smart Actuator will then attempt to adjust the water flow to achieve a comfortable indoor/supply air temperature during dehumidification. *NOTE: The measurement bulb of the thermistor is located in the blower airstream and the leads of the thermistor are positioned on the modulating water line board thermistor terminals.*

For more information on the iSeries Smart Actuator setpoint, see the following **Setpoint** section.

FIGURE 31
iSeries Smart Actuator Electrical Terminals

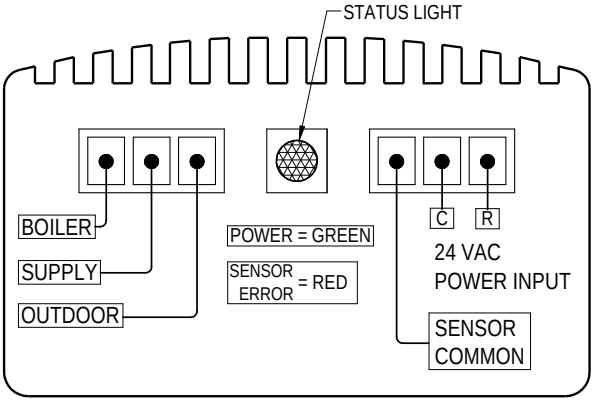

MIS-4135

Setpoint

As previously mentioned, the iSeries Smart Actuator operates the valve to maintain a fixed setpoint. The setpoint temperature is set using the setpoint dial located on top of the actuator. The setpoint range available is from 80ºF to 180ºF. The factory set setpoint for the actuator is indicated in Figure 32. Please adjust this setting to maintain the desired dehumidification supply air temperature of 70ºF during set-up.

FIGURE 32
iSeries Smart Actuator Temperature Setpoint

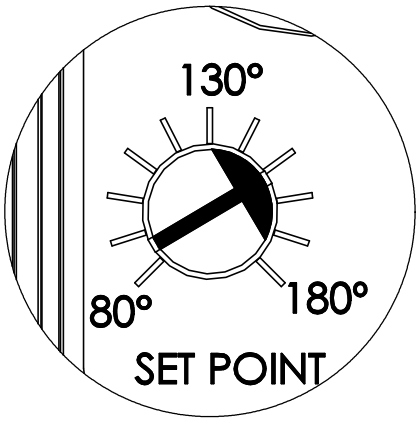

MIS-4136 A

Sensor Warning

Do not apply power to the sensor terminals of the iSeries Smart Actuator. If voltage is applied to these terminals, the iSeries Smart Actuator SUPPLY, SETBACK and/or SENSOR COMMON, the actuator will be damaged.

Dehumidification

For sequence of operation of dehumidification, refer to the **DEHUMIDIFICATION** beginning on page 43.

Model Features

These models provide a unique dehumidification circuit for periods of high indoor humidity conditions. Additionally, an "energy recovery ventilator" may be provided to allow for outside ventilation air requirements by eliminating excessive sensible and latent loads as a result of the increased ventilation requirement.

Refer to Specification Sheet S3601 for the standard features of the QW*S3D models. Electrical data for the QW dehumidification Q-TEC models is unique and cannot be directly compared to the electrical data for the standard Q-TEC models.

Special Features

Dehumidification Circuit

There are two events taking place to maximize the dehumidification performance while the unit is in dehumidification. The first event integrates a 3-way water valve with the iSeries Smart Actuator monitoring the supply air temperature. The second event incorporates a refrigeration dehumidification circuit, which includes an independent heat exchanger coil in the supply air stream in addition to the standard evaporator coil.

The first event, featuring the 3-way water valve with the iSeries Smart Actuator, monitors the supply air temperature with a thermistor. The iSeries Smart Actuator has a temperature setting adjustment located at the top of the actuator (see Figure 33). The temperature setting adjustment scans the temperature communicated to the modulating water line control from the thermistor located in the indoor blower supply air stream. The ohm reading is sent to the iSeries Smart Actuator, attached to the 3-way water valve, that will drive the valve closed or open depending on the requirement for heat exchange. To attain the required setting, an initial adjustment will be required by the service technician at set-up. The adjustment will allow for fine tuning the demand for latent extraction. The factory setting for the iSeries Smart Actuator should be just above the 80°F setting indicated on the setting control.

The second event incorporating the refrigeration dehumidification circuit uses a coil to reheat the supply air after it passes over the cooling coil, and is sized to nominally match the sensible cooling capacity of the evaporator coil. Extended run times in dehumidification mode can be achieved using waste heat from the refrigeration cycle to achieve the reheat process, while at the same time large amounts of moisture can be extracted from the passing air stream. See **Dehumidification Sequence of Operation** for specific operating sequences and review the tables for performance on sensible and latent capacities, water removal ratings and supply air delivery conditions.

The dehumidification refrigerant reheat circuit is controlled by a 3-way valve in the refrigeration circuit, directing the refrigerant gas to the normal water condenser during periods when standard air conditioning is required. During periods of time of low ambient temperature (approximately 65°F to 75°F outdoor) and high indoor humidity, a humidistat senses the need for mechanical dehumidification. It then energizes both the compressor circuit and the 3-way valve, thus directing the hot refrigerant discharge gas into a separate desuperheating condenser circuit which reheats the conditioned air before it is delivered to the room. The refrigerant gas is then routed from the desuperheating condenser to the water coil for further heat transfer. When the humidistat is satisfied, the system automatically switches back to normal A/C mode and either continues to operate or turns off based on the signal from the wall thermostat. The result is separate humidity control at minimum operating cost.

FIGURE 33
iSeries Smart Actuator Temperature Adjustment

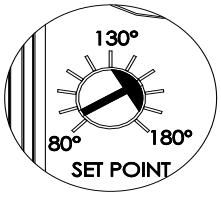

Dehumidification Sequence of Operation

Dehumidification is controlled through a humidistat and is independent of the thermostat. On a call for dehumidification mode of operation, the compressor will operate at full load (capacity) and 3-way valve that feeds the reheat coil is energized through D terminal. Dehumidification will continue until the humidistat is satisfied.

Anytime there is a R-Y call for cooling or heat pump during an active D call, the system will undergo a time delay sequence. The sequence will incorporate a 75-second time delay before the YO signal will become active and a 55-second time OFF delay on the D call. After the time delays have been satisfied, dehumidification is canceled.

The time delay allows the modulating water valve to open, allowing full capacity water flow to be achieved before cooling is initialized. The unit will then operate in the cooling mode at part load for Stage 1 cooling (can shift to full load if 2nd Stage cooling is required) until thermostat is satisfied. If dehumidification call is still present when cooling call is satisfied, the unit will continue to operate and immediately revert to dehumidification mode, with compressor at full level.

FIGURE 34
Cooling Mode and Dehumidification Mode Circuit Diagrams

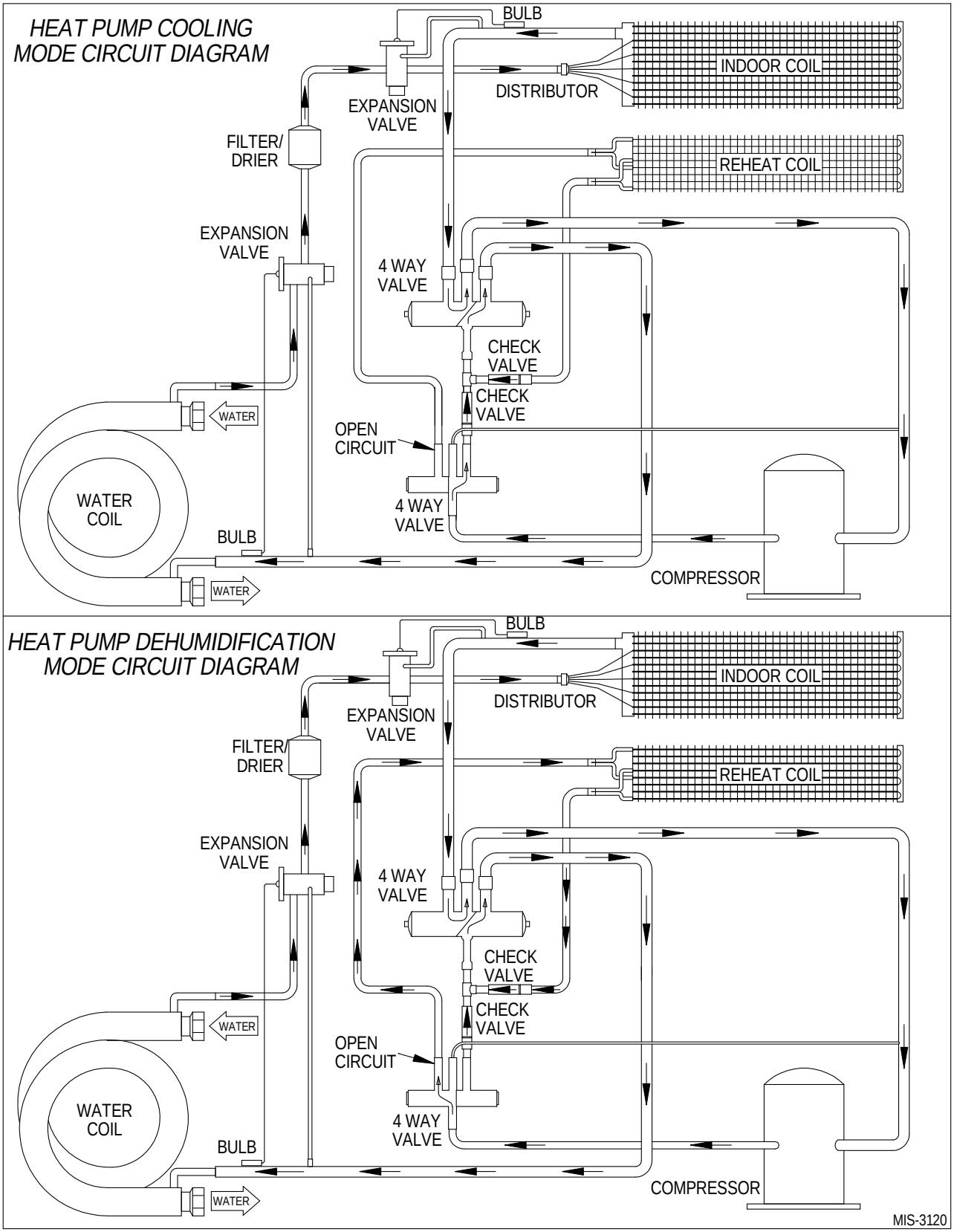

TABLE 7A
QW2S3D Dehumidification Performance – Cooling Full Load
(Full Load Capacities Based Upon Rated Flow of 7 GPM of 15% Methanol/Mass at 950 CFM Airflow)

Entering Fluid Temp. (°F)	Entering Air Temp. (°F)	Total Capacity (MBtuH)	Sensible Capacity (MBtuH)	Latent Capacity (MBtuH)	Pounds of Water per Hour Removal	Sensible to Total Ratio	Approximate Supply Air	
							DB	WB
65°	75° DB 62.5° WB	24.0	18.4	5.6	5.3	76.67%	57.6	54.2
70°		24.0	18.6	5.4	5.1	77.50%	57.4	54.1
75°		23.8	18.7	5.1	4.8	78.57%	57.1	54.1
80°		23.7	18.8	4.9	4.6	79.32%	57.1	54.1
85°		23.6	18.9	4.7	4.4	80.08%	57.2	54.4
90°		23.3	19.0	4.3	4.1	81.55%	57.3	54.7
95°		23.0	19.2	3.8	3.6	83.48%	57.5	55.2
100°		22.7	19.2	3.5	3.3	84.58%	57.8	55.7
65°	75° DB 64.1° WB	24.3	17.2	7.1	6.7	70.78%	58.8	55.7
70°		24.4	17.4	7.0	6.6	71.31%	58.5	55.6
75°		24.3	17.5	6.8	6.4	72.02%	58.4	55.5
80°		24.2	17.6	6.6	6.2	72.73%	58.3	55.6
85°		24.0	17.7	6.3	5.9	73.75%	58.3	55.9
90°		23.8	17.8	6.0	5.7	74.79%	58.4	56.2
95°		23.5	17.9	5.6	5.3	76.17%	58.6	56.6
100°		23.2	18.0	5.2	4.9	77.59%	58.9	57.2
65°	75° DB 65.5° WB	25.0	16.0	9.0	8.5	64.00%	59.9	57.2
70°		25.0	16.2	8.8	8.3	64.80%	59.7	57.1
75°		24.8	16.3	8.5	8.0	65.73%	59.4	57.0
80°		24.7	16.4	8.3	7.8	66.40%	59.4	57.1
85°		24.5	16.5	8.0	7.5	67.35%	59.5	57.3
90°		24.3	16.6	7.7	7.3	68.31%	59.6	57.7
95°		24.0	16.7	7.3	6.9	69.58%	59.8	58.1
100°		23.6	16.8	6.8	6.4	71.19%	60.1	58.7
65°	75° DB 66.7° WB	25.5	14.8	10.7	10.1	58.04%	61.1	58.7
70°		25.4	14.9	10.5	9.9	58.66%	60.8	58.5
75°		25.3	15.1	10.2	9.6	59.68%	60.6	58.5
80°		25.2	15.2	10.0	9.4	60.32%	60.6	58.6
85°		25.0	15.3	9.7	9.2	61.20%	60.6	58.8
90°		24.8	15.4	9.4	8.9	62.10%	60.7	59.2
95°		24.5	15.5	9.0	8.5	63.27%	60.9	59.6
100°		24.1	15.6	8.5	8.0	64.73%	61.2	60.2
65°	75° DB 68° WB	26.0	13.6	12.4	11.7	52.31%	62.2	60.2
70°		25.9	13.7	12.2	11.5	52.90%	62.0	60.0
75°		25.8	13.9	11.9	11.2	53.88%	61.7	60.0
80°		25.7	14.0	11.7	11.0	54.47%	61.7	60.1
85°		25.5	14.1	11.4	10.8	55.29%	61.8	60.3
90°		25.3	14.2	11.1	10.5	56.13%	61.9	60.7
95°		25.0	14.3	10.7	10.1	57.20%	62.1	61.1
100°		24.6	14.4	10.2	9.6	58.54%	62.4	61.7
65°	80° DB 68.3° WB	25.9	17.8	8.1	7.6	68.73%	63.4	60.7
70°		25.9	17.9	8.0	7.5	69.11%	63.2	60.6
75°		25.8	18.0	7.8	7.4	69.77%	63.0	60.5
80°		25.7	18.2	7.5	7.1	70.82%	63.0	60.6
85°		25.5	18.3	7.2	6.8	71.76%	63.0	60.8
90°		25.3	18.4	6.9	6.5	72.73%	63.1	61.2
95°		25.0	18.5	6.5	6.1	74.00%	63.3	61.6
100°		24.6	18.6	6.0	5.7	75.61%	63.6	62.2

TABLE 7B
QW2S3D Dehumidification Performance – Dehumidification Full Load
(Full Load Capacities Based Upon Rated Flow of 7 GPM of 15% Methanol/Mass at 950 CFM Airflow)

Entering Fluid Temp. (°F)	Entering Air Temp. (°F)	Total Capacity (MBtuH)	Sensible Capacity (MBtuH)	Latent Capacity (MBtuH)	Pounds of Water per Hour Removal	Approximate Supply Air	
						DB	WB
65°	75° DB 62.5° WB	10.0	5.5	4.5	4.2	68.3	58.3
70°		8.5	4.3	4.2	4.0	69.7	58.9
75°		7.0	3.2	3.8	3.6	71.0	59.4
80°		5.5	2.1	3.4	3.2	72.4	60.2
85°		4.1	1.1	3.0	2.8	73.7	60.9
90°		2.8	0.1	2.7	2.5	74.9	61.4
95°		1.5	-0.9	2.4	2.3	76.0	62.0
100°		0.3	-1.8	2.1	2.0	77.2	62.5
65°	75° DB 64.1° WB	10.6	4.9	5.7	5.4	69.0	59.5
70°		9.0	3.8	5.2	4.9	70.4	60.2
75°		7.5	2.7	4.8	4.5	71.8	60.9
80°		6.1	1.6	4.5	4.2	73.1	61.5
85°		4.7	0.6	4.1	3.9	74.4	62.1
90°		3.4	-0.4	3.8	3.6	75.6	62.7
95°		2.1	-1.4	3.5	3.3	76.7	63.3
100°		0.9	-2.3	3.2	3.0	77.8	63.8
65°	75° DB 65.5° WB	11.2	4.3	6.9	6.5	69.7	60.8
70°		9.6	3.2	6.4	6.0	71.1	61.5
75°		8.1	2.1	6.0	5.7	72.4	61.9
80°		6.7	1.0	5.7	5.4	73.8	62.8
85°		5.3	0.0	5.3	5.0	75.0	63.4
90°		4.0	-1.0	5.0	4.7	76.3	64.0
95°		2.7	-2.0	4.7	4.4	77.4	64.5
100°		1.5	-2.9	4.4	4.2	78.5	65.1
65°	75° DB 66.7° WB	11.7	3.8	7.9	7.5	70.4	62.0
70°		10.2	2.6	7.6	7.2	71.8	62.7
75°		8.7	1.5	7.2	6.8	73.1	63.2
80°		7.2	0.5	6.7	6.3	74.5	64.0
85°		5.9	-0.6	6.5	6.1	75.7	64.6
90°		4.5	-1.6	6.1	5.8	76.9	65.2
95°		3.3	-2.5	5.8	5.5	78.1	65.8
100°		2.0	-3.5	5.5	5.2	79.2	66.3
65°	75° DB 68° WB	12.3	3.2	9.1	8.6	71.1	63.3
70°		10.8	2.1	8.7	8.2	72.5	64.0
75°		9.3	1.0	8.3	7.8	73.7	64.5
80°		7.8	-0.1	7.9	7.5	75.2	65.3
85°		6.4	-1.1	7.5	7.1	76.4	65.9
90°		5.1	-2.1	7.2	6.8	77.6	66.5
95°		3.8	-3.1	6.9	6.5	78.8	67.0
100°		2.6	-4.0	6.6	6.2	79.9	67.6
65°	80° DB 68.3° WB	12.7	5.7	7.0	6.6	71.7	63.2
70°		11.1	4.6	6.5	6.1	73.1	63.9
75°		9.6	3.5	6.1	5.8	74.4	64.4
80°		8.2	2.4	5.8	5.5	75.8	65.2
85°		6.8	1.4	5.4	5.1	77.0	65.8
90°		5.5	0.4	5.1	4.8	78.3	66.4
95°		4.2	-0.6	4.8	4.5	79.4	66.9
100°		3.0	-1.5	4.5	4.2	80.5	67.5

TABLE 8A
QW3S3D Dehumidification Performance – Cooling Full Load
(Full Load Capacities Based Upon Rated Flow of 8 GPM of 15% Methanol/Mass at 1150 CFM Airflow)

Entering Fluid Temp. (°F)	Entering Air Temp. (°F)	Total Capacity (MBtuH)	Sensible Capacity (MBtuH)	Latent Capacity (MBtuH)	Pounds of Water per Hour Removal	Sensible to Total Ratio	Approximate Supply Air	
							DB	WB
65°	75° DB 62.5° WB	36.0	26.7	9.3	8.8	74.17%	54.4	52.1
70°		35.2	26.3	8.9	8.4	74.72%	54.5	52.3
75°		33.8	25.7	8.1	7.6	76.04%	54.8	52.4
80°		33.1	25.4	7.7	7.3	76.74%	55.2	52.9
85°		31.9	24.9	7.0	6.6	78.06%	55.6	53.2
90°		30.6	24.3	6.3	5.9	79.41%	56.2	53.6
95°		29.1	23.7	5.4	5.1	81.44%	57.0	54.1
100°		27.6	23.0	4.6	4.3	83.33%	57.8	54.6
65°	75° DB 64.1° WB	37.1	25.2	11.9	11.2	67.92%	55.6	53.5
70°		36.2	24.9	11.3	10.7	68.78%	55.7	53.7
75°		35.3	24.4	10.9	10.3	69.12%	56.0	54.0
80°		34.2	24.0	10.2	9.6	70.18%	56.3	54.3
85°		33.0	23.4	9.6	9.1	70.91%	56.8	54.7
90°		31.7	22.8	8.9	8.4	71.92%	57.4	55.0
95°		30.2	22.2	8.0	7.5	73.51%	58.1	55.5
100°		28.6	21.5	7.1	6.7	75.17%	59.0	56.0
65°	75° DB 65.5° WB	38.1	23.8	14.3	13.5	62.47%	56.7	54.9
70°		37.3	23.4	13.9	13.1	62.73%	56.9	55.1
75°		35.9	22.8	13.1	12.4	63.51%	57.1	55.2
80°		35.3	22.5	12.8	12.1	63.74%	57.5	55.7
85°		34.1	22.0	12.1	11.4	64.52%	58.0	56.1
90°		32.8	21.4	11.4	10.8	65.24%	58.6	56.4
95°		31.3	20.7	10.6	10.0	66.13%	59.3	56.9
100°		29.7	20.1	9.6	9.1	67.68%	60.1	57.4
65°	75° DB 66.7° WB	39.2	22.3	16.9	15.9	56.89%	57.9	56.3
70°		38.4	21.9	16.5	15.6	57.03%	58.0	56.5
75°		37.0	21.3	15.7	14.8	57.57%	58.3	56.6
80°		36.4	21.0	15.4	14.5	57.69%	58.7	57.1
85°		35.2	20.5	14.7	13.9	58.24%	59.2	57.5
90°		33.9	19.9	14.0	13.2	58.70%	59.8	57.8
95°		32.4	19.3	13.1	12.4	59.57%	60.5	58.3
100°		30.8	18.6	12.2	11.5	60.39%	61.3	58.8
65°	75° DB 68° WB	40.3	20.8	19.5	18.4	51.61%	59.1	57.7
70°		39.5	20.5	19.0	17.9	51.90%	59.2	57.9
75°		38.1	19.8	18.3	17.3	51.97%	59.5	58.0
80°		37.5	19.6	17.9	16.9	52.27%	59.9	58.5
85°		36.3	19.0	17.3	16.3	52.34%	60.3	58.9
90°		34.9	18.4	16.5	15.6	52.72%	60.9	59.2
95°		33.5	17.8	15.7	14.8	53.13%	61.6	59.7
100°		31.9	17.1	14.8	14.0	53.61%	62.5	60.2
65°	80° DB 68.3° WB	40.9	26.3	14.6	13.8	64.30%	60.1	58.0
70°		40.1	25.9	14.2	13.4	64.59%	60.3	58.2
75°		38.7	25.3	13.4	12.6	65.37%	60.5	58.3
80°		38.1	25.0	13.1	12.4	65.62%	60.9	58.8
85°		36.9	24.5	12.4	11.7	66.40%	61.4	59.1
90°		35.6	23.9	11.7	11.0	67.13%	62.0	59.5
95°		34.1	23.3	10.8	10.2	68.33%	62.7	60.0
100°		32.5	22.6	9.9	9.3	69.54%	63.5	60.4

TABLE 8B
QW3S3D Dehumidification Performance – Dehumidification Full Load
(Full Load Capacities Based Upon Rated Flow of 8 GPM of 15% Methanol/Mass at 1150 CFM Airflow)

Entering Fluid Temp. (°F)	Entering Air Temp. (°F)	Total Capacity (MBtuH)	Sensible Capacity (MBtuH)	Latent Capacity (MBtuH)	Pounds of Water per Hour Removal	Approximate Supply Air	
						DB	WB
65°	75° DB 62.5° WB	14.1	5.1	9.0	8.5	69.3	57.1
70°		14.3	5.6	8.7	8.2	68.8	57.0
75°		13.7	5.4	8.3	7.8	68.9	57.0
80°		12.7	4.6	8.1	7.6	70.0	57.7
85°		10.9	3.1	7.8	7.4	71.6	58.4
90°		8.3	1.0	7.3	6.9	73.9	59.5
95°		5.0	-1.7	6.7	6.3	76.9	60.8
100°		1.1	-5.1	6.2	5.8	80.6	62.4
65°	75° DB 64.1° WB	15.1	4.1	11.0	10.4	70.5	58.3
70°		15.3	4.6	10.7	10.1	70.0	58.2
75°		14.9	4.4	10.5	9.9	70.2	58.4
80°		13.7	3.6	10.1	9.5	71.1	58.8
85°		11.9	2.1	9.8	9.2	72.7	59.6
90°		9.3	0.0	9.3	8.8	75.0	60.6
95°		6.0	-2.8	8.8	8.3	78.0	62.0
100°		2.0	-6.2	8.2	7.7	81.7	63.6
65°	75° DB 65.5° WB	16.0	3.1	12.9	12.2	71.6	59.5
70°		16.3	3.6	12.7	12.0	71.1	59.4
75°		15.7	3.4	12.3	11.6	71.2	59.4
80°		14.7	2.6	12.1	11.4	72.2	60.0
85°		12.8	1.1	11.7	11.0	73.8	60.8
90°		10.3	-1.0	11.3	10.7	76.1	61.8
95°		7.0	-3.8	10.8	10.2	79.1	63.2
100°		3.0	-7.2	10.2	9.6	82.9	64.8
65°	75° DB 66.7° WB	17.0	2.1	14.9	14.1	72.7	60.7
70°		17.3	2.5	14.8	14.0	72.2	60.6
75°		16.7	2.4	14.3	13.5	72.3	60.6
80°		15.7	1.5	14.2	13.4	73.3	61.2
85°		13.8	0.1	13.7	12.9	74.9	62.0
90°		11.2	-2.0	13.2	12.5	77.2	63.0
95°		8.0	-4.8	12.8	12.1	80.3	64.3
100°		4.0	-8.2	12.2	11.5	84.0	66.0
65°	75° DB 68° WB	18.0	1.1	16.9	15.9	73.8	61.8
70°		18.2	1.5	16.7	15.8	73.3	61.8
75°		17.6	1.3	16.3	15.4	73.4	61.8
80°		16.7	0.5	16.2	15.3	74.4	62.4
85°		14.8	-0.9	15.7	14.8	76.1	63.2
90°		12.2	-3.1	15.3	14.4	78.4	64.2
95°		8.9	-5.8	14.7	13.9	81.4	65.5
100°		5.0	-9.2	14.2	13.4	85.1	67.2
65°	80° DB 68.3° WB	20.1	6.4	13.7	12.9	73.0	61.3
70°		20.3	6.9	13.4	12.6	72.5	61.3
75°		19.7	6.7	13.0	12.3	72.6	61.3
80°		18.8	5.9	12.9	12.2	73.6	61.9
85°		16.9	4.4	12.5	11.8	75.2	62.7
90°		14.3	2.3	12.0	11.3	77.5	63.7
95°		11.0	-0.5	11.5	10.8	80.6	65.0
100°		7.1	-3.9	11.0	10.4	84.3	66.6

TABLE 9A
QW4S3D Dehumidification Performance – Cooling Full Load
(Full Load Capacities Based Upon Rated Flow of 9 GPM of 15% Methanol/Mass at 1650 CFM Airflow)

Entering Fluid Temp. (°F)	Entering Air Temp. (°F)	Total Capacity (MBtuH)	Sensible Capacity (MBtuH)	Latent Capacity (MBtuH)	Pounds of Water per Hour Removal	Sensible to Total Ratio	Approximate Supply Air	
							DB	WB
65°	75° DB 62.5° WB	48.7	34.0	14.7	13.9	69.82%	52.4	50.2
70°		47.8	33.6	14.2	13.4	70.29%	53.0	50.8
75°		46.3	33.2	13.1	12.4	71.71%	52.9	50.6
80°		46.0	32.9	13.1	12.4	71.52%	53.6	51.4
85°		45.3	32.6	12.7	12.0	71.96%	53.6	51.3
90°		44.5	32.5	12.0	11.3	73.03%	53.4	50.7
95°		43.8	32.3	11.5	10.8	73.74%	53.0	50.8
100°		43.2	32.3	10.9	10.3	74.77%	52.4	50.2
65°	75° DB 64.1° WB	50.2	32.2	18.0	17.0	64.14%	53.5	51.6
70°		49.3	31.8	17.5	16.5	64.50%	54.1	52.2
75°		48.4	31.4	17.0	16.0	64.88%	54.6	52.5
80°		47.6	31.1	16.5	15.6	65.34%	54.8	52.7
85°		46.8	30.9	15.9	15.0	66.03%	54.8	52.7
90°		46.1	30.7	15.4	14.5	66.59%	54.6	52.5
95°		45.4	30.6	14.8	14.0	67.40%	54.2	52.1
100°		44.8	30.5	14.3	13.5	68.08%	53.5	51.5
65°	75° DB 65.5° WB	51.8	30.5	21.3	20.1	58.88%	54.6	53.0
70°		50.8	30.1	20.7	19.5	59.25%	55.3	53.5
75°		49.4	29.7	19.7	18.6	60.12%	55.2	53.3
80°		49.1	29.4	19.7	18.6	59.88%	55.9	54.1
85°		48.3	29.1	19.2	18.1	60.25%	55.9	54.1
90°		47.6	29.0	18.6	17.5	60.92%	55.7	53.4
95°		46.9	28.8	18.1	17.1	61.41%	55.3	53.5
100°		46.3	28.8	17.5	16.5	62.20%	54.7	52.9
65°	75° DB 66.7° WB	53.3	28.7	24.6	23.2	53.85%	55.8	54.3
70°		52.4	28.3	24.1	22.7	54.01%	56.4	54.9
75°		51.0	27.9	23.1	21.8	54.71%	56.3	54.7
80°		50.7	27.6	23.1	21.8	54.44%	57.0	55.4
85°		49.9	27.4	22.5	21.2	54.91%	57.0	55.4
90°		49.2	27.2	22.0	20.8	55.28%	56.8	54.7
95°		48.5	27.1	21.4	20.2	55.88%	56.4	54.8
100°		47.8	27.0	20.8	19.6	56.49%	55.8	54.2
65°	75° DB 68° WB	54.9	27.0	27.9	26.3	49.18%	56.9	55.7
70°		53.9	26.6	27.3	25.8	49.35%	57.5	56.2
75°		52.5	26.2	26.3	24.8	49.90%	57.4	56.1
80°		52.2	25.9	26.3	24.8	49.62%	58.2	56.8
85°		51.4	25.6	25.8	24.3	49.81%	58.2	56.8
90°		50.7	25.5	25.2	23.8	50.30%	57.9	56.1
95°		50.0	25.3	24.7	23.3	50.60%	57.5	56.2
100°		49.4	25.3	24.1	22.7	51.21%	56.9	55.6
65°	80° DB 68.3° WB	54.8	33.0	21.8	20.6	60.22%	58.1	56.2
70°		53.9	32.6	21.3	20.1	60.48%	58.7	56.7
75°		52.4	32.2	20.2	19.1	61.45%	58.6	56.5
80°		52.1	31.9	20.2	19.1	61.23%	59.4	57.3
85°		51.4	31.7	19.7	18.6	61.67%	59.4	57.3
90°		50.6	31.5	19.1	18.0	62.25%	59.2	56.6
95°		49.9	31.4	18.5	17.5	62.93%	58.7	56.7
100°		49.3	31.3	18.0	17.0	63.49%	58.1	56.1

TABLE 9B
QW4S3D Dehumidification Performance – Dehumidification Full Load
(Full Load Capacities Based Upon Rated Flow of 9 GPM of 15% Methanol/Mass at 1650 CFM Airflow)

Entering Fluid Temp. (°F)	Entering Air Temp. (°F)	Total Capacity (MBtuH)	Sensible Capacity (MBtuH)	Latent Capacity (MBtuH)	Pounds of Water per Hour Removal	Approximate Supply Air	
						DB	WB
65°	75° DB 62.5° WB	23.8	9.3	14.5	13.7	66.6	54.9
70°		21.5	7.3	14.2	13.4	68.3	55.7
75°		18.3	5.2	13.1	12.4	70.2	56.6
80°		15.6	2.9	12.7	12.0	72.4	57.8
85°		11.9	0.4	11.5	10.8	74.7	59.0
90°		7.8	-2.3	10.1	9.5	77.2	60.3
95°		3.2	-5.2	8.4	7.9	79.9	61.7
100°		----	-8.3	6.4	6.0	82.8	63.2
65°	75° DB 64.1° WB	25.4	8.3	17.1	16.1	67.5	55.9
70°		23.2	6.4	16.8	15.8	69.2	56.8
75°		20.5	4.3	16.2	15.3	71.1	57.7
80°		17.3	2.0	15.3	14.4	73.2	58.8
85°		13.6	-0.6	14.2	13.4	75.5	60.0
90°		9.5	-3.3	12.8	12.1	78.0	61.3
95°		4.8	-6.2	11.0	10.4	80.7	62.7
100°		----	-9.3	9.0	8.5	83.6	64.2
65°	75° DB 65.5° WB	27.1	7.3	19.8	18.7	68.4	56.9
70°		24.8	5.4	19.4	18.3	70.1	57.8
75°		21.7	3.3	18.4	17.4	71.9	58.7
80°		18.9	1.0	17.9	16.9	74.1	59.8
85°		15.3	-1.5	16.8	15.8	76.4	61.0
90°		11.1	-4.2	15.3	14.4	78.9	62.3
95°		6.5	-7.1	13.6	12.8	81.6	63.7
100°		1.4	-10.2	11.6	10.9	84.5	65.2
65°	75° DB 66.7° WB	28.8	6.4	22.4	21.1	69.2	57.9
70°		26.5	4.5	22.0	20.8	70.9	58.8
75°		23.3	2.4	20.9	19.7	72.8	59.7
80°		20.6	0.0	20.6	19.4	74.9	60.9
85°		16.9	-2.5	19.4	18.3	77.2	62.1
90°		12.8	-5.2	18.0	17.0	79.7	63.4
95°		8.2	-8.1	16.3	15.4	82.4	64.8
100°		3.1	-11.2	14.3	13.5	85.3	66.3
65°	75° DB 68° WB	30.4	5.4	25.0	23.6	70.1	59.0
70°		28.2	3.5	24.7	23.3	71.8	59.8
75°		25.0	1.4	23.6	22.3	73.7	60.7
80°		22.3	-0.9	23.2	21.9	75.8	61.9
85°		18.6	-3.4	22.0	20.8	78.1	63.1
90°		14.4	-6.1	20.5	19.3	80.6	64.4
95°		9.8	-9.0	18.8	17.7	83.3	65.8
100°		4.7	-12.2	16.9	15.9	86.2	67.3
65°	80° DB 68.3° WB	31.5	9.7	21.8	20.6	70.9	58.9
70°		29.2	7.8	21.4	20.2	72.6	59.8
75°		26.1	5.7	20.4	19.2	74.4	60.6
80°		23.3	3.4	19.9	18.8	76.6	61.8
85°		19.7	0.9	18.8	17.7	78.9	63.0
90°		15.5	-1.8	17.3	16.3	81.4	64.3
95°		10.9	-4.7	15.6	14.7	84.1	65.7
100°		5.8	-7.9	13.7	12.9	87.0	67.2

TABLE 10A
QW5S3D Dehumidification Performance – Cooling Full Load
(Full Load Capacities Based Upon Rated Flow of 9 GPM of 15% Methanol/Mass at 1650 CFM Airflow)

Entering Fluid Temp. (°F)	Entering Air Temp. (°F)	Total Capacity (MBtuH)	Sensible Capacity (MBtuH)	Latent Capacity (MBtuH)	Pounds of Water per Hour Removal	Sensible to Total Ratio	Approximate Supply Air	
							DB	WB
65°	75° DB 62.5° WB	57.8	40.0	17.8	16.8	69.20%	52.9	50.5
70°		56.2	38.8	17.4	16.4	69.04%	53.6	50.9
75°		54.3	38.0	16.3	15.4	69.98%	53.8	51.1
80°		53.6	37.7	15.9	15.0	70.34%	54.3	51.5
85°		52.7	37.9	14.8	14.0	71.92%	54.3	51.7
90°		52.0	38.5	13.5	12.7	74.04%	54.1	51.8
95°		51.6	39.6	12.0	11.3	76.74%	53.8	51.9
100°		51.5	41.2	10.3	9.7	80.00%	53.2	51.8
65°	75° DB 64.1° WB	59.3	38.1	21.2	20.0	64.25%	54.0	51.9
70°		57.7	36.8	20.9	19.7	63.78%	54.7	52.3
75°		56.2	36.0	20.2	19.1	64.06%	55.1	52.6
80°		55.1	35.7	19.4	18.3	64.79%	55.3	52.9
85°		54.2	35.9	18.3	17.3	66.24%	55.4	53.1
90°		53.5	36.5	17.0	16.0	68.22%	55.2	53.2
95°		53.1	37.7	15.4	14.5	71.00%	54.9	53.3
100°		53.0	39.2	13.8	13.0	73.96%	54.3	53.3
65°	75° DB 65.5° WB	60.8	36.1	24.7	23.3	59.38%	55.1	53.3
70°		59.2	34.9	24.3	22.9	58.95%	55.7	53.7
75°		57.3	34.1	23.2	21.9	59.51%	56.0	53.9
80°		56.6	33.8	22.8	21.5	59.72%	56.4	54.3
85°		55.7	33.9	21.8	20.6	60.86%	56.5	54.5
90°		55.0	34.6	20.4	19.2	62.91%	56.3	54.6
95°		54.6	35.7	18.9	17.8	65.38%	55.9	54.7
100°		54.5	37.3	17.2	16.2	68.44%	55.4	54.7
65°	75° DB 66.7° WB	62.3	34.2	28.1	26.5	54.90%	56.2	54.7
70°		60.6	32.9	27.7	26.1	54.29%	56.8	55.1
75°		58.8	32.1	26.7	25.2	54.59%	57.1	55.3
80°		58.1	31.8	26.3	24.8	54.73%	57.5	55.7
85°		57.2	32.0	25.2	23.8	55.94%	57.5	55.9
90°		56.5	32.6	23.9	22.5	57.70%	57.4	56.0
95°		56.1	33.7	22.4	21.1	60.07%	57.0	56.1
100°		56.0	35.3	20.7	19.5	63.04%	56.5	56.1
65°	75° DB 68° WB	63.8	32.2	31.6	29.8	50.47%	57.3	56.1
70°		62.1	30.9	31.2	29.4	49.76%	57.9	56.5
75°		60.3	30.1	30.2	28.5	49.92%	58.1	56.7
80°		59.6	29.8	29.8	28.1	50.00%	58.6	57.1
85°		58.7	30.0	28.7	27.1	51.11%	58.6	57.3
90°		58.0	30.7	27.3	25.8	52.93%	58.5	57.5
95°		57.6	31.8	25.8	24.3	55.21%	58.1	57.5
100°		57.5	33.4	24.1	22.7	58.09%	57.5	57.5
65°	80° DB 68.3° WB	63.8	38.9	24.9	23.5	60.97%	58.4	56.6
70°		62.1	37.7	24.4	23.0	60.71%	59.0	57.0
75°		60.2	36.9	23.3	22.0	61.30%	59.3	57.3
80°		59.5	36.6	22.9	21.6	61.51%	59.7	57.6
85°		58.6	36.8	21.8	20.6	62.80%	59.8	57.8
90°		57.9	37.4	20.5	19.3	64.59%	59.6	58.0
95°		57.6	38.5	19.1	18.0	66.84%	59.2	58.0
100°		57.4	40.1	17.3	16.3	69.86%	58.7	58.0

TABLE 10B
QW5S3D Dehumidification Performance – Dehumidification Full Load
(Full Load Capacities Based Upon Rated Flow of 9 GPM of 15% Methanol/Mass at 1650 CFM Airflow)

Entering Fluid Temp. (°F)	Entering Air Temp. (°F)	Total Capacity (MBtuH)	Sensible Capacity (MBtuH)	Latent Capacity (MBtuH)	Pounds of Water per Hour Removal	Approximate Supply Air	
						DB	WB
65°	75° DB 62.5° WB	25.7	9.3	16.4	15.5	68.2	56.0
70°		23.1	7.3	15.8	14.9	69.6	56.6
75°		20.0	5.1	14.9	14.1	71.1	57.2
80°		17.0	2.7	14.3	13.5	73.0	58.2
85°		13.6	0.0	13.6	12.8	75.1	59.2
90°		9.9	-3.0	12.9	12.2	77.3	60.3
95°		5.9	-6.2	12.1	11.4	79.8	61.6
100°		1.6	-9.7	11.3	10.7	82.5	63.0
65°	75° DB 64.1° WB	27.0	7.9	19.1	18.0	69.2	57.2
70°		24.4	6.0	18.4	17.4	70.6	57.8
75°		21.5	3.8	17.7	16.7	72.2	58.6
80°		18.3	1.3	17.0	16.0	74.0	59.4
85°		14.9	-1.4	16.3	15.4	76.1	60.4
90°		11.2	-4.3	15.5	14.6	78.3	61.6
95°		7.2	-7.6	14.8	14.0	80.8	62.8
100°		2.9	-11.0	13.9	13.1	83.5	64.2
65°	75° DB 65.5° WB	28.3	6.6	21.7	20.5	70.2	58.4
70°		25.7	4.6	21.1	19.9	71.6	59.0
75°		22.6	2.4	20.2	19.1	73.1	59.6
80°		19.6	0.0	19.6	18.5	75.0	60.6
85°		16.2	-2.7	18.9	17.8	77.1	61.6
90°		12.5	-5.7	18.2	17.2	79.3	62.8
95°		8.5	-8.9	17.4	16.4	81.8	64.0
100°		4.3	-12.4	16.7	15.8	84.5	65.4
65°	75° DB 66.7° WB	29.7	5.2	24.5	23.1	71.2	59.6
70°		27.0	3.3	23.7	22.4	72.6	60.2
75°		23.9	1.1	22.8	21.5	74.1	60.8
80°		20.9	-1.3	22.2	20.9	76.0	61.9
85°		17.5	-4.1	21.6	20.4	78.1	62.9
90°		13.8	-7.0	20.8	19.6	80.3	64.0
95°		9.8	-10.2	20.0	18.9	82.8	65.2
100°		5.6	-13.7	19.3	18.2	85.5	66.6
65°	75° DB 68° WB	31.0	3.9	27.1	25.6	72.2	60.9
70°		28.3	2.0	26.3	24.8	73.6	61.5
75°		25.2	-0.2	25.4	24.0	75.1	62.0
80°		22.2	-2.7	24.9	23.5	77.0	63.1
85°		18.8	-5.4	24.2	22.8	79.1	64.1
90°		15.1	-8.4	23.5	22.2	81.3	65.2
95°		11.1	-11.6	22.7	21.4	83.8	66.5
100°		6.9	-15.1	22.0	20.8	86.5	67.9
65°	80° DB 68.3° WB	31.8	9.9	21.9	20.7	73.1	60.8
70°		29.2	8.0	21.2	20.0	74.5	61.4
75°		26.0	5.8	20.2	19.1	76.0	61.9
80°		23.1	3.3	19.8	18.7	77.9	63.0
85°		19.6	0.6	19.0	17.9	80.0	64.0
90°		15.9	-2.3	18.2	17.2	82.2	65.1
95°		12.0	-5.6	17.6	16.6	84.7	66.4
100°		7.7	-9.0	16.7	15.8	87.4	67.8

Table 11
Dehumidification Relay Logic Board

			Inputs to the Board							Outputs from the Board						
Energize on Unit Terminal Strip	**Mode**	**Occupied/ Unoccupied**	**RAT**	**Y**	**B**	**W2**	**A1**	**D**	**G**	**G1**	**BK**	**RV**	**TWV**	**W**	**YO**	**A2**
G	Blower	Unoccupied							X	X	X					
G, A	Blower	Occupied					X		X	X	X					X
Y1, O, G	Part Load Cooling	Unoccupied		X					X	X	X				X	
Y1, O, G, A	Part Load Cooling	Occupied		X			X		X	X	X				X	X
Y1, O, G, D	Part Load Cooling/Dehum	Unoccupied		X				X	X	X					X	
Y1, O, G, D, A	Part Load Cooling/Dehum	Occupied		X			X	X	X	X					X	X
Y1, Y2, O, G,	Full load Cooling	Unoccupied		X					X	X	X				X	
Y1, Y2, O, G, A	Full load Cooling	Occupied		X			X		X	X	X				X	X
Y1, O, G, D	Full Load Cooling/Dehum	Unoccupied		X				X	X	X					X	
Y1,G, O, D, A	Full Load Cooling/Dehum	Occupied		X			X	X	X	X					X	X
Y1, G	Part Load Heat Pump	Unoccupied		X					X	X	X				X	
Y1, G, A	Part Load Heat pump	Occupied		X			X		X	X	X				X	X
Y1, G, D	Part Load Heat Pump/Dehum	Unoccupied		X				X	X	X					X	
Y1, G, D, A	Part Load Heat Pump/Dehum	Occupied		X			X	X	X	X					X	X
Y1, Y2, G	Full Load Heat Pump	Unoccupied		X					X	X	X				X	
Y1, Y2, G, A	Full Load Heat Pump	Occupied		X			X		X	X	X				X	X
Y1, Y2, G, D	Full Load Heat Pump/Dehum	Unoccupied		X				X	X	X					X	
Y1, Y2, G, D, A	Full Load Heat Pump/Dehum	Occupied		X			X	X	X	X					X	X
Y1, Y2, G, W2	Part Load Heat Pump w/Aux. Heat	Unoccupied		X		X			X	X	X			X	X	
Y1, Y2, G, W2	Part Load Heat Pump w/Aux. Heat	Occupied		X		X	X		X	X	X			X	X	X
Y1, Y2, G, W2, D	Part Load Heat Pump w/Aux. Heat/ Dehum	Unoccupied		X		X		X	X	X				X	X	
Y1, Y2, G, W2 D, A	Part Load Heat Pump w/Aux. Heat/ Dehum	Occupied		X		X	X	X	X	X				X	X	X
G, W2	Aux. Heat	Unoccupied				X			X	X	X			X		
G, W2, A	Aux. Heat	Occupied				X			X	X	X			X		X
G, W2, D	Aux. Heat/Dehum	Unoccupied				X		X	X	X			X		X	
G, W2, D, A	Aux. Heat/Dehum	Occupied				X	X	X	X	X			X		X	X
D	Dehumidifiction	Unoccupied						X		X			X		X	
D, A	Dehumidifiction	Occupied					X	X		X			X		X	X
Energize on Unit Terminal Strip	**Mode**	**Occupied/ Unoccupied**	**RAT**	**Y**	**B**	**W2**	**A1**	**D**	**G**	**G1**	**BK**	**RV**	**TWV**	**W**	**YO**	**A2**
			Inputs to the Board							**Outputs from the Board**						

NOTES

1. Cooling takes precedence over dehumidification. A cooling call cancels dehumidification.
2. For dehumidification, the "O" (reversing valve) is activated through the dehumidification cube relay.

CLOSED LOOP
(Earth Coupled Ground Loop Applications)

Circulation System Design

Equipment room piping design is based on years of experience with earth coupled heat pump systems. The design eliminates most causes of system failure.

Surprisingly, the heat pump itself is rarely the cause. Most problems occur because designers and installers forget that a closed loop earth coupled heat pump system is ***not*** like a household plumbing system.

Most household water systems have more than enough water pressure either from the well pump or the municipal water system to overcome the pressure of head loss in 1/2" or 3/4" household plumbing. A closed loop earth coupled heat pump system, however, is separated from the pressure of the household supply and relies on a small, low wattage pump to circulate the water and antifreeze solution through the earth coupling, heat pump and equipment room components.

The small circulator keeps the operating costs of the system to a minimum. However, the performance of the circulator ***must*** be closely matched with the pressure of head loss of the entire system in order to provide the required flow through the heat pump. Insufficient flow through the heat exchanger is one of the most common causes of system failure. Proper system piping design and circulator selection will eliminate this problem.

Bard supplies a work sheet to simplify head loss calculations and circulator selection. Refer to “Circulating Pump Work sheet” section in manual 2100-099.

Copper Water Coil Application

Copper water coils are available as a factory-installed option. The unit model number will indicate the coil option as the next to last character; “C” represents a water coil constructed of copper material and “N” represents a water coil constructed of cupronickel.

The cupronickel coil is suitable for all applications. **The copper coil is suitable for applications using ground loop and cooling tower only and is not recommended for open well application.**

Start Up Procedure for Closed Loop System

1. Be sure main power to the unit is OFF at disconnect.
2. Set thermostat system switch to OFF and fan switch to AUTO.
3. Move main power disconnect to ON. Except as required for safety while servicing, ***do not open the unit disconnect switch.***
4. Check system air flow for obstructions.
   A. Move thermostat fan switch to ON. Blower runs.
   B. Be sure all registers and grilles are open.
   C. Move thermostat fan switch to AUTO. Blowing should stop.
5. Flush, fill and pressurize the closed loop system as outlined in manual 2100-099.
6. Fully open the manual inlet and outlet valves. Start the loop pump module circulator(s) and check for proper operation. If circulator(s) are not operating, turn off power and diagnose the problem.
7. Check fluid flow using a direct reading flow meter or a single water pressure gauge; measure the pressure drop at the pressure/temperature plugs across the water coil. Compare the measurement with flow versus pressure drop table to determine the actual flow rate. If the flow rate is too low, recheck the selection of the loop pump module model for sufficient capacity. If the module selection is correct, there is probably trapped air or a restriction in the piping circuit.
8. Start the unit in cooling mode by moving the thermostat switch to cool. Fan should be set for AUTO.
9. Check the system refrigerant pressures against the cooling refrigerant pressure table in the installation manual for rated water flow and entering water temperatures. If the refrigerant pressures do not match, check for airflow problem then refrigeration system problem.
10. Switch the unit to the heating mode by moving the thermostat switch to heat. Fan should be set for AUTO.
11. Check the refrigerant system pressures against the heating refrigerant pressure table in installation manual. Once again, if they do not match, check for airflow problems and then refrigeration system problems.

NOTE *If a charge problem is determined (high or low):*

A. Check for possible refrigerant leaks.

B. Recover all remaining refrigerant from unit and repair leak.

C. Evacuate unit down to 29" of vacuum

D. Recharge the unit with refrigerant by weight. This is the only way to ensure a proper charge.

12. For iSeries Smart Actuator and water valve installation, refer to the **Valve and Actuator Installation/Removal** section on page 31.

13. It is advised to rotate the manual operation button, located on the top of the iSeries Smart Actuator, several times to make sure the water valve is loose and not seized before operation. This simple step will provide assurance the 3-way water valve is free to move once power is applied.

IMPORTANT *Operator must be removed from the valve body and ball valve must be in the full open position before soldering. Valve is shipped in the full closed position.*

FIGURE 35
Water Temperature and Pressure Procedure

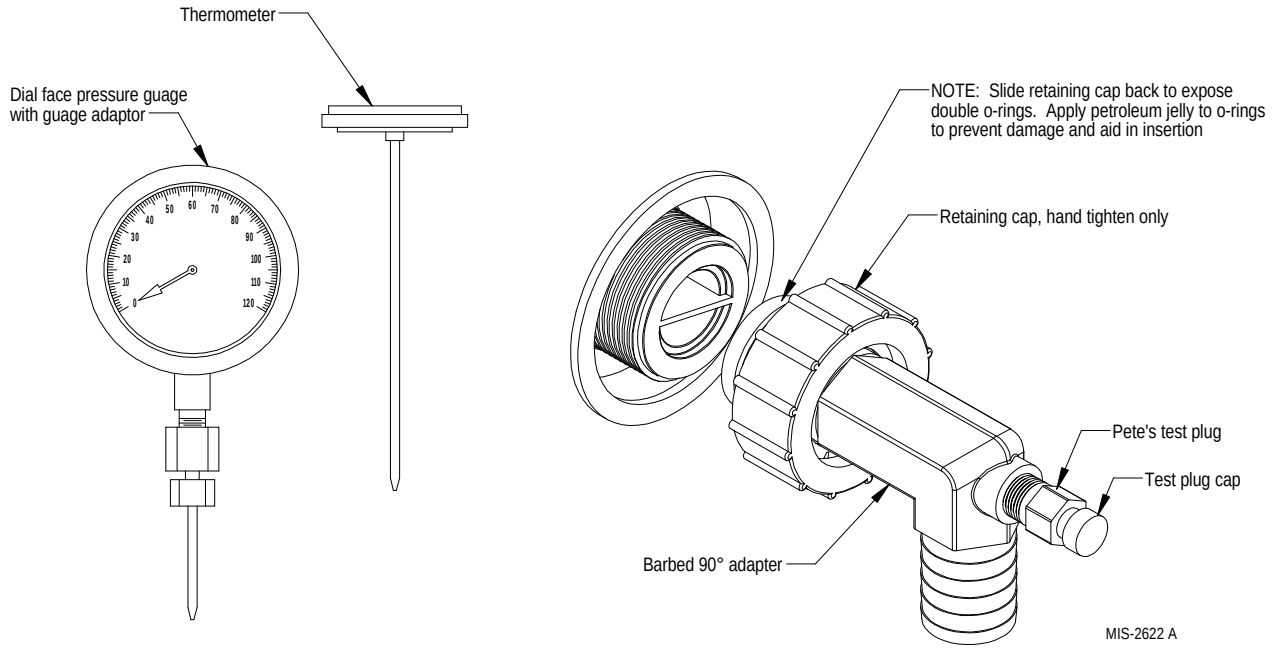

OPEN LOOP
(Well System Applications)

NOTE It is highly recommended on ground water systems (pump & dump) that a cupronickel coaxial coil is utilized on the source side of the system. Not doing so may void the product warranty due to aggressive/corrosive/highly oxygenated water attacking a copper coaxial water coil.

Water Connections

It is very important that an adequate supply of clean, noncorrosive water at the proper pressure be provided before the installation is made. Insufficient water, in the heating mode for example, will cause the low pressure switch to trip, shutting down the heat pump. In assessing the capacity of the water system, it is advisable that the complete water system be evaluated to prevent possible lack of water or water pressure at various household fixtures whenever the heat pump turns on. All plumbing to and from the unit is to be installed in accordance with local plumbing codes. The use of plastic pipe, where permissible, is recommended to prevent electrolytic corrosion of the water pipe. Because of the relatively cold temperatures encountered with well water, it is strongly recommended that the water lines connecting the unit be insulated to prevent water droplets form condensing on the pipe surface.

Refer to Figure 36. Slow closing ***Solenoid Valve (6)*** with a 24V coil provides on/off control of the water flow to the unit. Refer to the wiring diagram for correct hookup of the valve solenoid coil.

Constant Flow Valve (7) provides correct flow of water to the unit regardless of variations in water pressure. Observe the water flow direction indicated by the arrow on the side of the valve body. Table 12 shows the flow rate of each valve. Two constant flow rate valves may be installed in parallel to increase the flow. For example, when a 8603-007 (6 GPM) and 8603-011 (5 GPM) are installed in parallel the total flow will be 11 GPM.

Strainer (5) installed upstream of ***constant flow valve*** (7) to collect foreign material which would clog the flow valve orifice.

Figure 36 shows the use of ***shutoff valves (9 and 11)***, on the in and out water lines to permit isolation of the unit from the plumbing system should future service work require this. Globe valves should not be used as shutoff valves because of the excessive pressure drop inherent in the valve design. Instead use gate or ball valves as shut-offs so as to minimize pressure drop.

Drain cocks (8 and 10) and tees have been included to permit acid cleaning the refrigerant-to-water coil should such cleaning be required. See **Water Corrosion** section on page 58.

Drain cock (12) provides access to the system to check water flow through the constant flow valve to ensure adequate water flow through the unit. A water meter is used to check the water flow rate.

Figure 36
Piping Diagram

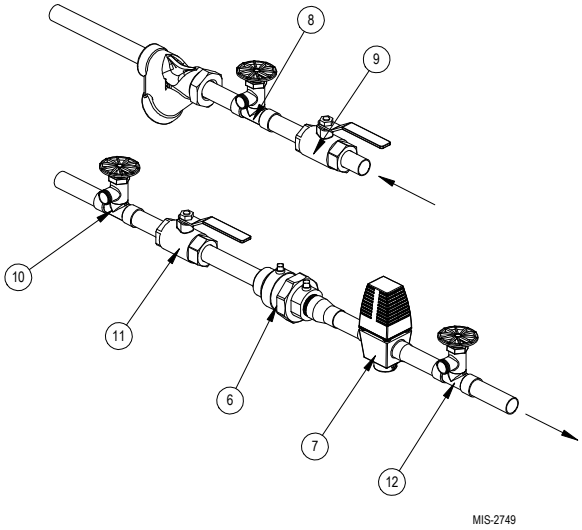

TABLE 12
Constant Flow Valves

Part No.	Min. Available Pressure PSIG	Flow Rate GPM
CFV-5	15 ①	5
CFV-6	15 ①	6
CFV-7	15 ①	7
CFV-9	15 ①	9

① The pressure drop through the constant flow valve will vary depending on the available pressure ahead of the valve. Unless minimum of 15 psig is available ***immediately*** ahead of the valve, no water will flow.

Well Pump Sizing

Strictly speaking, sizing the well pump is the responsibility of the well drilling contractor. It is important, however, that the HVAC contractor be familiar with the factors that determine what size pump will be required. Rule of thumb estimates will invariably lead to under or oversized well pumps. Undersizing the pump will result in inadequate water to the whole plumbing system but with especially bad results to the heat pump—NO HEAT/NO COOL calls will result. Oversized pumps will short cycle and could cause premature pump motor or switch failures.

The well pump must be capable of supplying enough water and at an adequate pressure to meet competing demands of water fixtures. The well pump must be sized in such a way that three requirements are met:

1. Adequate flow rate in GPM.
2. Adequate pressure at the fixture.
3. Able to meet the above from the depth of the well-feet of lift.

The pressure requirements put on the pump are directly affected by the diameter of pipe being used, as well as by the water flow rate through the pipe. The work sheet included in manual 2100-078 should guarantee that the well pump has enough capacity. It should also ensure that the piping is not undersized which would create too much pressure due to friction loss. High pressure losses due to undersized pipe will reduce efficiency and require larger pumps and could also create water noise problems.

System Start Up Procedure for Open Loop Applications

1. Be sure main power to the unit is OFF at disconnect.
2. Set thermostat system switch to OFF and fan switch to AUTO.
3. Move main power disconnect to ON. Except as required for safety while servicing, ***do not open the unit disconnect switch.***
4. Check system airflow for obstructions.
   A. Move thermostat fan switch to ON. Blower runs.
   B. Be sure all registers and grilles are open.
   C. Move thermostat fan switch to AUTO. Blower should stop.
5. Fully open the manual inlet and outlet valves.
6. Check water flow.
   A. Connect a water flow meter to the drain cock between the constant flow valve and the solenoid valve. Run a hose from the flow meter to a drain or sink. Open the drain cock.
   B. Check the water flow rate through constant flow valve to be sure it is the same as the unit is rated for.
   C. When water flow is okay, close drain cock and remove the water flow meter. The unit is now ready to start.
7. Start the unit in cooling mode by moving the thermostat switch to cool. Fan should be set for AUTO.
   A. Check to see the solenoid valve opened.
8. Check the system refrigerant pressures against the cooling refrigerant pressure table in the installation manual for rated water flow and entering water temperatures. If the refrigerant pressures do not match, check for airflow problem that refrigeration system problem.
9. Switch the unit to the heat mode by moving the thermostat switch to heat. Fan should be set for AUTO.
   A. Check to see the solenoid valve opened again.
10. Check the refrigerant system pressures against the heating refrigerant pressure table in installation manual. Once again, if they do not match, check for air flow problems and then refrigeration system problems.

NOTE If a charge problem is determined (high or low):

A. Check for possible refrigerant loss.
B. Recover all remaining refrigerant from unit and repair leak.
C. Evacuate unit down to 29" of vacuum.
D. Recharge the unit with refrigerant by weight. This is the only way to ensure proper charge.

11. For iSeries Smart Actuator and water valve installation, refer to the **Valve and Actuator Installation/Removal** section on page 31.
12. It is advised to rotate the manual operation button, located on the top of the iSeries Smart Actuator, several times to make sure the water valve is loose and not seized before operation. This simple step will provide assurance the 3-way water valve is free to move once power is applied.

IMPORTANT Operator must be removed from the valve body and ball valve must be in the full open position before soldering. Valve is shipped in the full closed position.

Water Corrosion

Two concerns will immediately come to light when considering a water source heat pump, whether for ground water or for a closed loop application: Will there be enough water? And, how will the water quality affect the system?

Water quantity is an important consideration and one which is easily determined. The well driller must perform a pump down test on the well according to methods described by the Nation Well Water Association. This test, if performed correctly, will provide information on the rate of flow and on the capacity of the well. It is important to consider the overall capacity of the well when thinking about a water source heat pump because the heat pump may be required to run for extended periods of time.

The second concern, about water quality, is equally important. Generally speaking, if the water is intended for drinking purposes, it should pose no problem for the heat pump. The well driller or local water softening company can perform tests which will determine the chemical properties of the well water.

Water quality problems will show up in the heat pump in one of more of the following ways:

1. Decrease in water flow through the unit.
2. Decreased heat transfer of the water coil (entering to leaving water temperature difference is less).

There are four main water quality problems associated with ground water. These are:

1. **Biological Growth**

   This is the growth of microscopic organisms in the water and will show up as a slimy deposit throughout the water system. Shock treatment of the well is usually required and this is best left up to the well driller. The treatment consists of injecting chlorine into the well casing and flushing the system until all growth is removed.

2. **Suspended Particles in the Water**

   Filtering will usually remove most suspended particles (fine sand, small gravel) from the water. The problem with suspended particles in the water is that it will erode metal parts, pumps, heat transfer coils, etc. So long as the filter is cleaned and periodically maintained, suspended particles should pose no serious problem. Consult with the well driller.

3. **Corrosion of Metal**

   Corrosion of metal parts results from either highly corrosive water (acid water, generally not the case with ground water) or galvanic reaction between dissimilar metals in the presence of water. By using plastic plumbing or dielectric unions, galvanic reaction is eliminated. The use of corrosion resistant materials (such as the Cupronickel coil) through the water system will reduce corrosion problems significantly.

4. **Scale Formation**

   Of all the water problems, the formation of scale by ground water is by far the most common. Usually this scale is due to the formation of calcium carbonate, but magnesium carbonate or calcium sulfate may also be present. Carbon dioxide gas (CO_2), the carbonate of calcium and magnesium carbonate, is very soluble in water. It will remain dissolved in the water until some outside factor upsets the balance. This outside influence may be a large change in water temperature or pressure. When this happens, enough carbon dioxide gas combines with dissolved calcium or magnesium in the water and falls out of solution until a new balance is reached. The change in temperature that this heat pump produces is usually not high enough to cause the dissolved gas to fall out of solution. Likewise, if pressure drops are kept to a reasonable level, no precipitation of carbon dioxide should occur.

Remedies of Water Problems

Water Treatment

Water treatment can usually be economically justified for close loop systems. However, because of the large amounts of water involved with a ground water heat pump, water treatment is generally too expensive.

Acid Cleaning the Water Coil or Heat Pump Recovery Unit

If scaling of the coil is strongly suspected, the coil can be cleaned up with a solution of phosphoric acid (food grade acid). Follow the manufacturer's directions for mixing, use, etc. Refer to Figure 37. The acid solution can be introduced into the heat pump coil through the hose bib A. Be sure the isolation valves are closed to prevent contamination of the rest of the system by the coil. The acid should be pumped from a bucket into the hose bib and returned to the bucket through the other hose bib B. Follow the manufacturer's directions for the product used as to how long the solution is to be circulated, but it is usually circulated for a period of several hours.

⚠ WARNING

Thin ice may result in the vicinity of the discharge line.

For complete information on water well systems and lake and pond applications, refer to manual from distributor.

FIGURE 37
Cleaning Water Coil

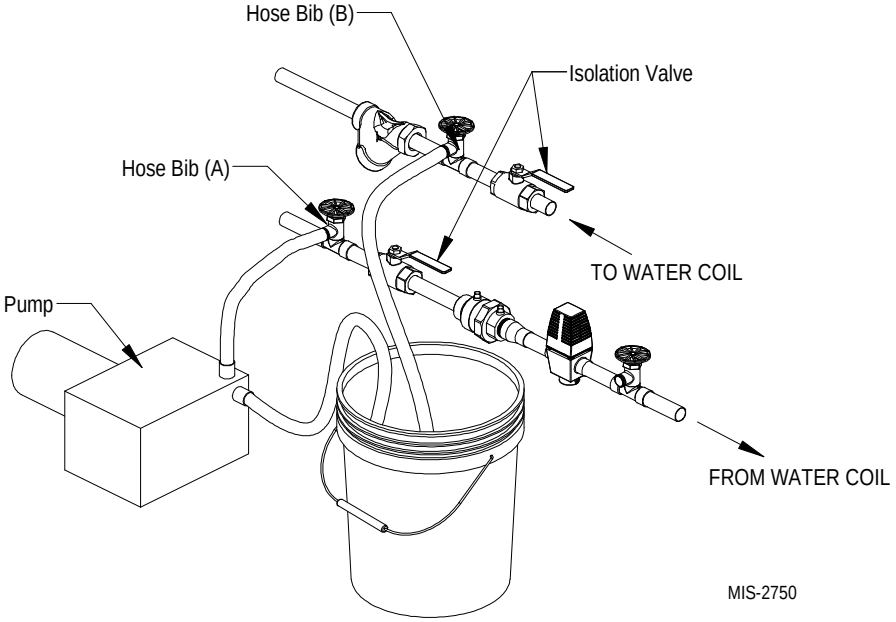

Lake and Pond Installations

Lakes and ponds can provide a low cost source of water for heating and cooling with a ground water heat pump. Direct usage of the water without some filtration is not recommended as algae and turbid water can foul the water-to-freon heat exchanger. Instead, there have been very good results using a dry well dug next to the water line or edge. Normal procedure in installing a dry well is to backhoe a 15' to 20' hole adjacent to the body of water (set backhoe as close to the water's edge as possible). Once excavated, a perforated plastic casing should be installed with gravel backfill placed around the casing. The gravel bed should provide adequate filtration of the water to allow good performance of the ground water heat pump.

The following is a list of recommendations to follow when installing this type of system (Refer to Figure 38 on page 60):

A. A lake or pond should be at least 1 acre (40,000 a square feet) in surface area for each 50,000 BTUs of ground water heat pump capacity or have two times the cubic feet size of the dwelling being heated (includes basement if heated).

B. The average water depth should be a least 4' and there should be an area where the water depth is at least 12' to 15' deep.

C. If possible, use a submersible pump suspended in the dry well casing. Jet pumps and other types of suction pumps normally consume more electrical energy than similarly sized submersible pumps. Pipe the unit the same as a water well system.

D. Size the pump to provide necessary GPM for the ground water heat pump. A 12 GPM or greater water flow rate is required on all modes when used on this type system.

E. A pressure tank should be installed in dwelling to be heated adjacent to the ground water heat pump. A pressure switch should be installed at the tank for pump control.

F. All plumbing should be carefully sized to compensate for friction losses, etc., particularly if the pond or lake is over 200' from the dwelling to be heated or cooled.

G. Keep all water lines below low water level and below the frost line.

H. Most installers use 4" field tile (rigid plastic or corrugated) for water return to the lake or pond.

I. The drain line discharge should be located at least 100' from the dry well location.

J. The drain line should be installed with a slope of 2" per 10' of run to provide complete drainage of the line when the ground water heat pump is not operating. This gradient should also help prevent freezing of the discharge where the pipe terminates above the frost line.

K. Locate the discharge high enough above high water level so the water will not back up and freeze inside the drain pipe.

L. Where the local conditions prevent the use of a gravity drainage system to a lake or pond, standard plastic piping can instead be run out into the pond below the frost and low water level.

FIGURE 38
Water Well System

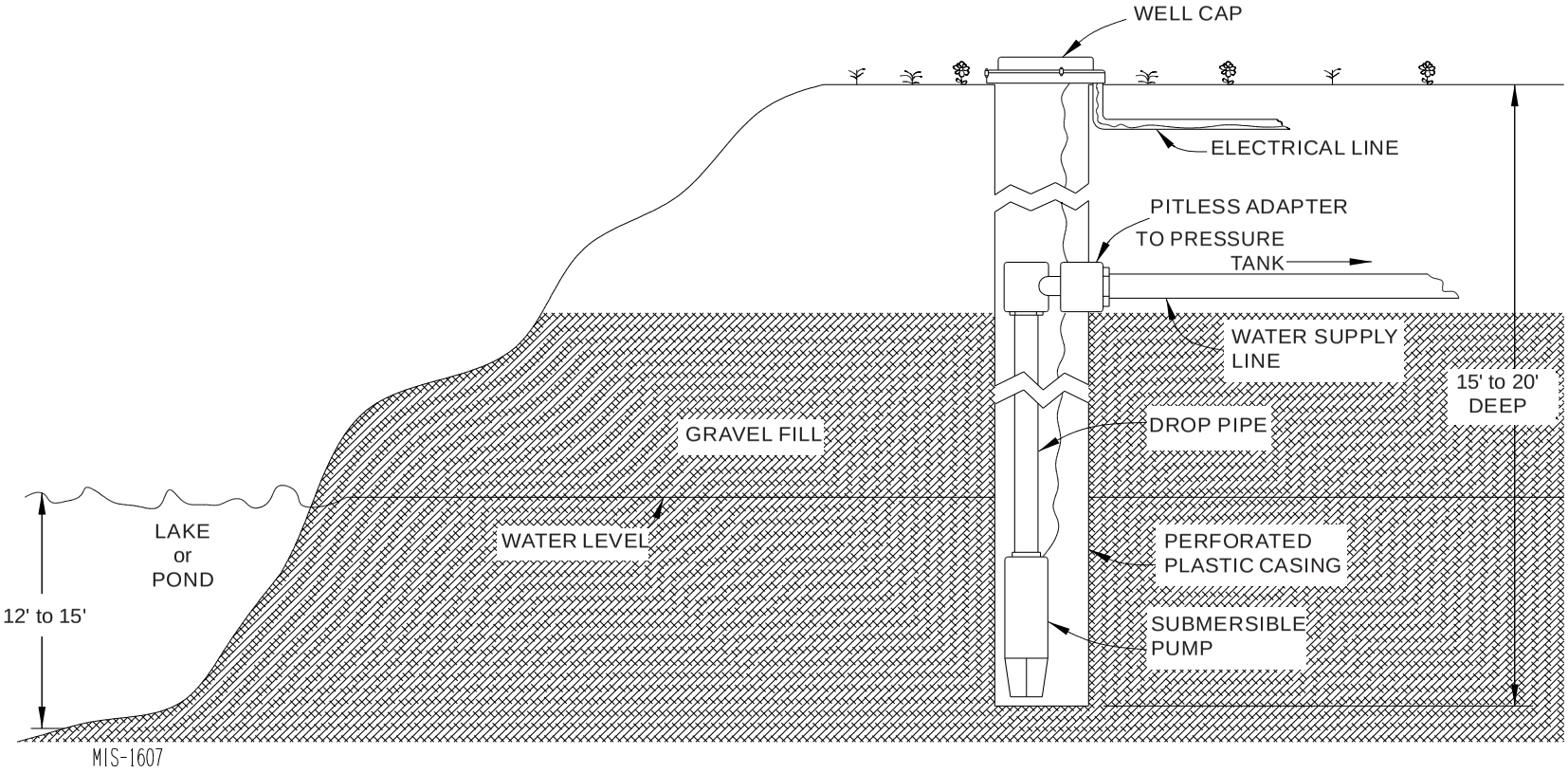

WARNING

Thin ice may result in the vicinity of the discharge line.

For complete information on water well systems and lake and pond applications, refer to manual 2100-078 available from the distributor.

Cooling Tower/Boiler Application

The cooling tower and boiler water loop temperature is usually maintained between 50°F to 100°F to ensure adequate cooling and heating performance.

In the cooling mode, heat is rejected from the unit into the source water loop. A cooling tower provides evaporative cooling to the loop water thus maintaining a constant supply temperature to the unit. When utilizing open cooling towers, chemical water treatment is mandatory to ensure the water is free from corrosive minerals.

It is imperative that all air be eliminated from the source closed loop side of the heat exchanger to ensure against fouling.

In the heating mode, heat is absorbed from the source water loop. A boiler can be utilized to maintain the loop at the desired temperature. In milder climates a "flooded tower" concept is often used. This concept involves adding makeup water to the cooling tower sump to maintain the desired loop temperature.

CAUTION

Water piping exposed to extreme low ambient temperatures are subject to freezing.

Units are equipped with double O-ring (female pipe thread) fittings. Consult the specification sheets for sizes. Teflon tape sealer should be used when connecting to the unit to ensure against leaks and possible condenser fouling. Do not overtighten the connections. Flexible hoses should be used between the unit and the rigid system to avoid possible vibration. Ball valves should be installed in the supply and return lines for unit isolation and unit water flow rate balancing.

Pressure/temperature ports are recommended in both supply and return lines for system flow balancing. Water flow can be accurately set by measuring the refrigerant to water heat exchangers water side pressure drop. See Table 13 for water flow and pressure drop information.

TABLE 13
Water Flow and Pressure Drop

GPM	QW2S3 & QW3S3		QW4S3		QW5S3	
	PSID	Ft. Hd.	PSID	Ft. Hd.	PSID	Ft. Hd.
3	0.1	0.23				
4	0.6	1.38	0.9	2.08		
5	3.1	7.26	1.4	3.23		
6	5.7	13.19	3.6	8.39		
7	8.3	19.13	7.3	16.80	6.7	15.52
8	10.9	25.07	10.9	25.21	10.0	22.97
9	13.4	31.00	14.6	33.61	13.2	30.42
10			18.2	42.02	16.4	37.87
11			21.9	50.43	19.6	45.32
12			25.5	58.83	22.9	52.77
13			29.1	67.24	26.1	60.22
14			32.8	75.65	29.3	67.67
15					32.6	75.12
16					35.8	82.57
17					39.0	90.02
18						

FIGURE 39
Water Source Heat Pump Cooling Cycle

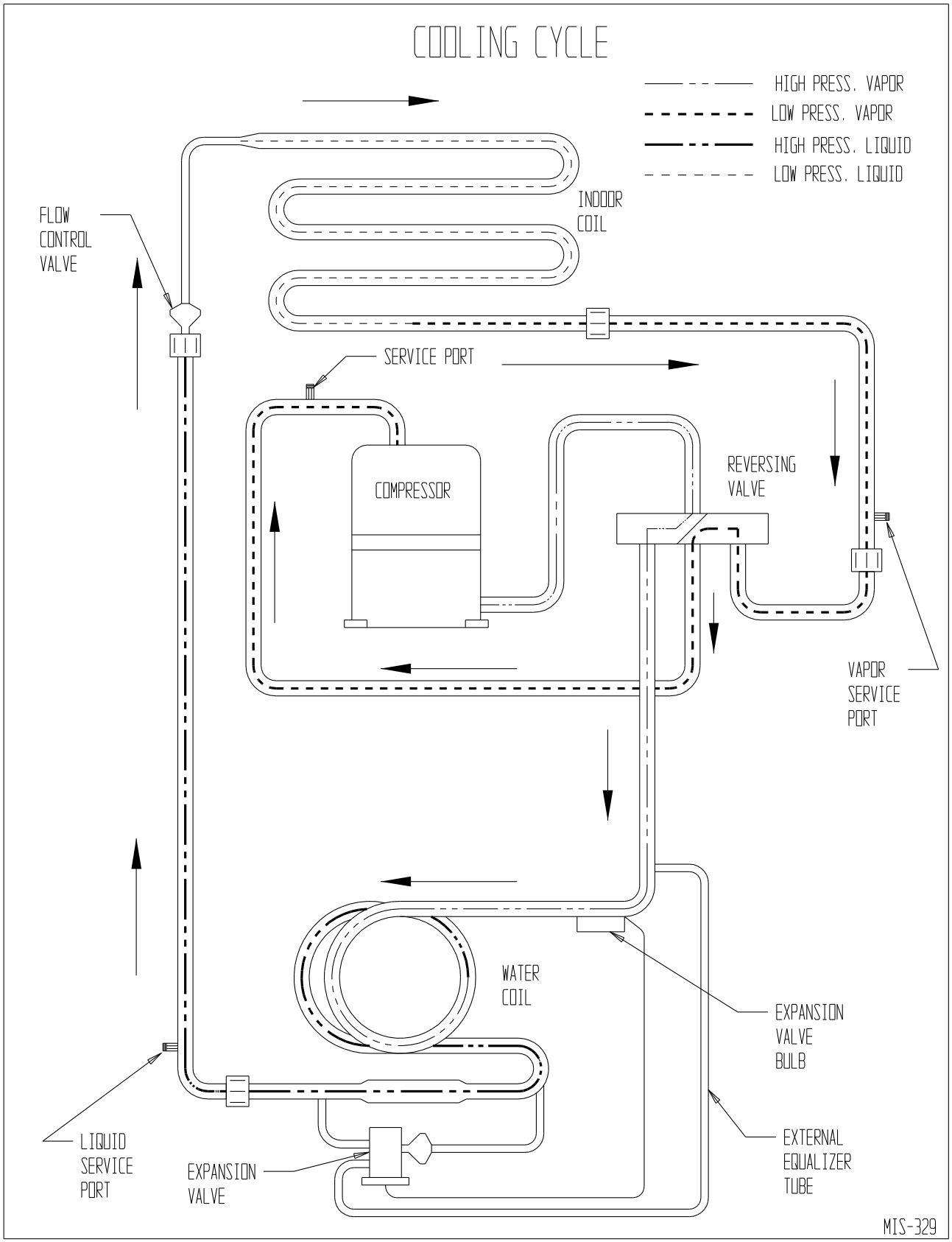

FIGURE 40
Water Source Heat Pump Heating Cycle

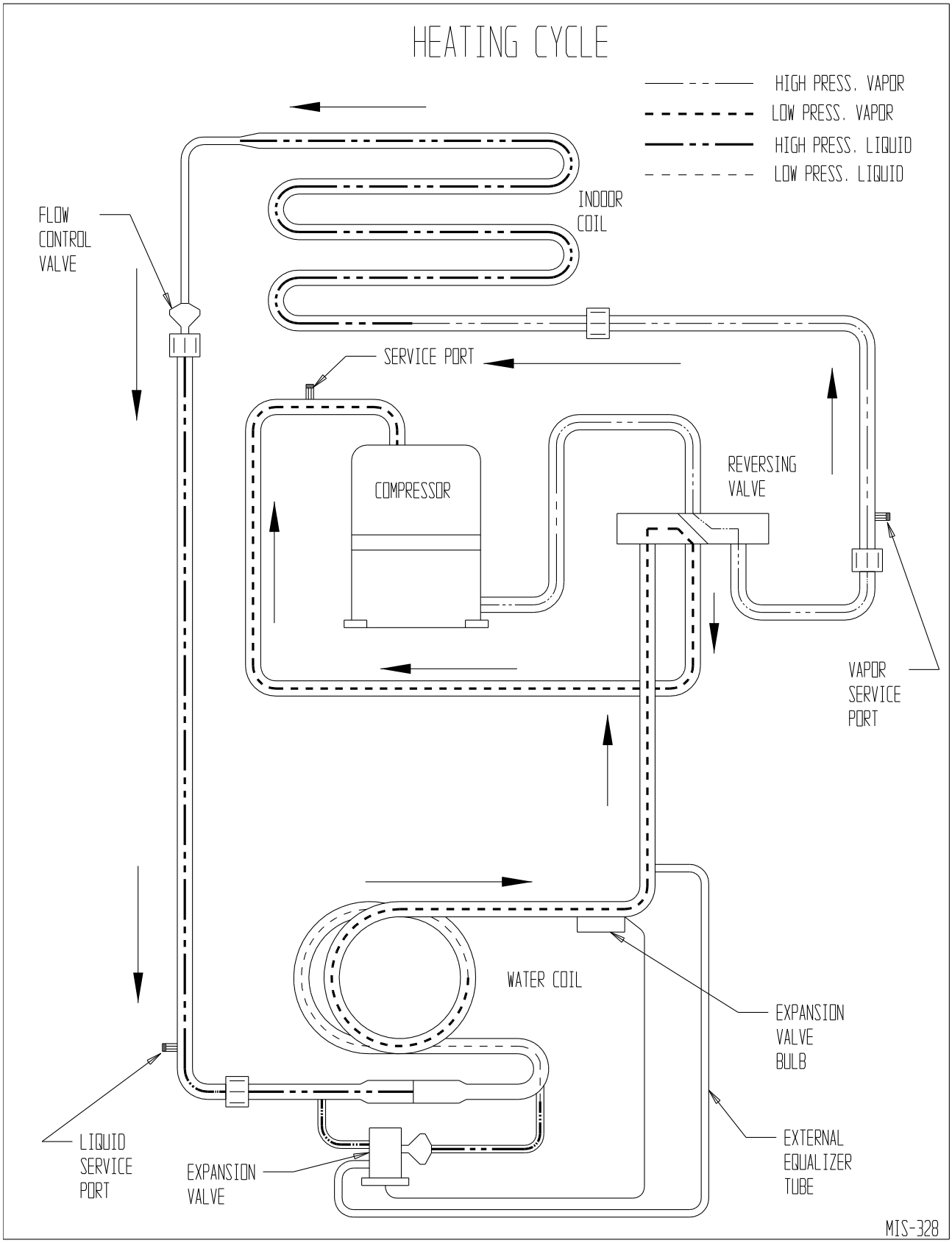

Unbrazing System Components

If the refrigerant charge is removed from a scroll-equipped unit by bleeding the high side only, it is sometimes possible for the scrolls to seal, preventing pressure equalization through the compressor. This may leave low side shell and suction line tubing pressurized. If the brazing torch is then applied to the low side while the low side shell and suction line contains pressure, the pressurized refrigerant and oil mixture could ignite when it escapes and contacts the brazing flame. To prevent this occurrence, it is important to check both the high and low side with manifold gauges before unbrazing.

⚠ WARNING

Both the high and low side of the scroll compressor must be checked with manifold gauges before unbrazing system components. Failure to do so could cause pressurized refrigerant and oil mixture to ignite if it escapes and contacts the brazing flame causing property damage, bodily harm or death.

Troubleshooting Geothermal Logic CCM

The Bard QW*S3D Series is equipped with a high pressure switch, low pressure switch and flow switch. The switches are all located in the condenser section of the unit. Each switch has its own illuminated diagnostic light, which provides the user an easy solution for basic troubleshooting.

High Pressure Switch

(Terminals HP1 and HP2) Circuit will be proved as "closed" prior to energizing A or CC terminals. If pressure switch opens, compressor will go into soft lockout mode and compressor operation will be terminated; green fault light will be illuminated. Logic control will then go through 5-minute delay on break plus random start sequence. If no fault is found on next run cycle, compressor will continue operation. If fault reoccurs, a hard lockout will be initiated and fault signal is sent to L terminal.

Low Pressure Switch

(Terminals LP1 and LP2) Circuit will be proved as "closed" prior to energizing A or CC terminals. The condition of the LP terminals will then be ignored for the first 90 seconds after a demand for compressor operation. Following this 90-second period, if pressure switch opens, compressor will go into soft lockout mode and compressor operation will be terminated; orange fault light will be illuminated. The compressor control board will then go through a 5-minute delay on break plus random start sequence. If no fault is found on next run cycle, compressor will continue operation. If fault reoccurs, hard lockout will be initiated and the fault signal is sent to the L terminal.

Flow Switch

(Terminals FS1 and FS2) Circuit will be proved as "closed" prior to energizing CC terminal. If flow switch opens, compressor will go into soft lockout mode and compressor operation will be terminated; red fault light will be illuminated. Compressor logic control will then go through 5-minute delay on break plus random start sequence. If no fault is found on next run cycle, compressor will continue operation. If fault reoccurs, hard lockout will be initiated and fault signal is sent to L terminal.

The flow type switch is located on the copper tube located at the condenser coil, water out. When there is a fault related to the flow switch, a red LED light will give notice by illumination, indicating a fault condition is present.

Logic Control Board

Three of the four switches have normally closed contacts and one contact (CO = unused) has a normally open contact. If any of the four switches fault, their corresponding light will blink and initialize a soft lockout of the compressor circuit. If recurrence happens on the same cooling call cycle, a hard lockout of the compressor circuit will occur requiring a manual system reset (See **SEQUENCE OF OPERATION** on page 40.)

The compressor logic control board has five LED lights providing status updates of the system operation (see Figure 41). When the green status light is blinking, this is an indication that there is 24V power to the board. Upon an alarm detection from one of the four safety switches, there will be a blinking light indicating a fault. The faults are as follows:

HP = Green fault illumination

LP = Orange fault illumination

FS = Red fault illumination

CO = Yellow fault illumination

FIGURE 41
LED Fault Illumination

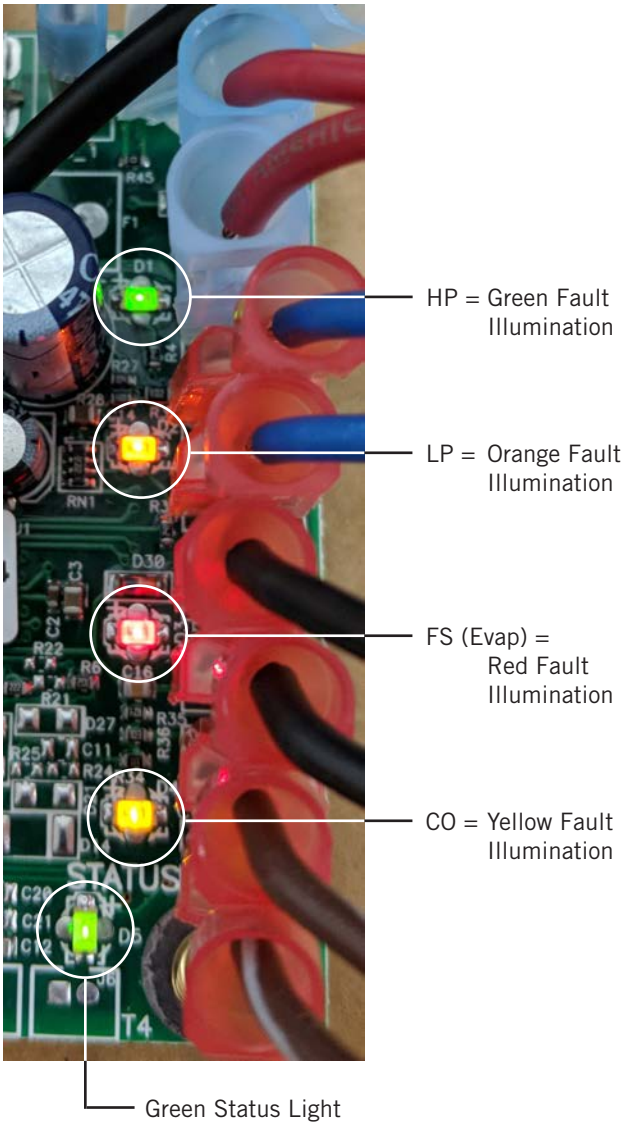

Troubleshooting Water Modulating Actuator Diagnostics

The Bard QW*S3D Series is equipped with a water modulating actuator. The water modulation is achieved through the operation of a TACO iSeries Smart Actuator, attached to a TACO 3-way valve.

The iSeries Smart Actuator is a microprocessor-based valve designed to provide a setpoint (fixed) temperature to a HVAC system by modulating the position of a mixing valve. The iSeries Smart Actuator is shown in Figure 42.

FIGURE 42
iSeries Smart Actuator

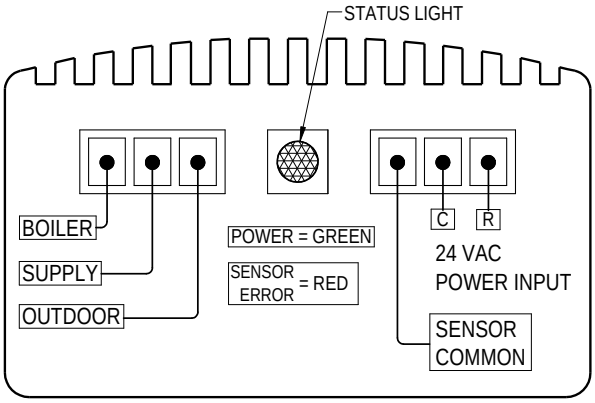

MIS-4135

Troubleshooting the iSeries Smart Actuator

As in any troubleshooting procedure, it is important to isolate a problem as much as possible before proceeding. The error message greatly simplifies troubleshooting of the iSeries-S. When the control flashes an error message, identify the fault by observing the LED status light code and follow standard testing procedures to confirm the problem. The LED status code and error can be diagnosed by following the light sequences in the multi-status LED table (Table 14).

If a wiring fault is suspected, return to the wiring diagram located on the unit door and carefully inspect all external wiring and wiring connections.

Testing the Sensors

TABLE 14
Multi-Status LED

LED	LED Status	ISeries Smart Actuator Status
Green	Solid	Power On
	Flash	Reduced Output (System Protection Activated)
Red	Flash, Pause, Flash, Pause, Flash, ...	System Supply Sensor Fault The iSeries-S operates at a fixed output

A good quality test meter capable of measuring up to 5,000 kΩ (1 kΩ= 1000 Ω) is required to measure the sensor resistance. In addition to this, the actual temperature must be measured with a good quality digital thermometer.

First measure the temperature using the thermometer and then measure the resistance of the sensor at the iSeries Smart Actuator. The wires from the sensor must not be connected to the iSeries Smart Actuator while this test is performed. The wiring terminals are easily removed by pulling them from the iSeries Smart

Actuator. Using the information found in Table 15, estimate the temperature measured by the sensor. The sensor and thermometer readings should be close. If the test meter reads a very high resistance, there may be a broken wire, a poor wiring connection or a defective sensor. If the resistance is very low, the wiring may be shorted, there may be moisture in the sensor or the sensor may be defective. To test for a defective sensor, measure the resistance directly at the sensor location.

TABLE 15
Temperature F vs. Resistance R of Temperature Sensor

F	R	F	R	F	R	F	R
-25.0	196871	13.0	56985	53.0	19374	89.0	7507
-24.0	190099	14.0	55284	52.0	18867	90.0	7334
-23.0	183585	15.0	53640	53.0	18375	91.0	7165
-22.0	177318	16.0	52051	54.0	17989	92.0	7000
-21.0	171289	17.0	50514	55.0	17434	93.0	6840
-20.0	165487	18.0	49028	56.0	16984	94.0	6683
-19.0	159904	19.0	47590	57.0	16547	95.0	6531
-18.0	154529	20.0	46200	58.0	16122	96.0	6383
-17.0	149355	21.0	44855	59.0	15710	97.0	6239
-16.0	144374	22.0	43554	60.0	15310	98.0	6098
-15.0	139576	23.0	42295	61.0	14921	99.0	5961
-14.0	134956	24.0	41077	62.0	14544	100.0	5827
-13.0	130506	25.0	39898	63.0	14177	101.0	5697
-12.0	126219	26.0	38757	64.0	13820	102.0	5570
-11.0	122089	27.0	37652	65.0	13474	103.0	5446
-10.0	118108	28.0	36583	66.0	13137	104.0	5326
-9.0	114272	29.0	35548	67.0	12810	105.0	5208
-8.0	110575	30.0	34545	68.0	12492	106.0	5094
-7.0	107010	31.0	33574	69.0	12183	107.0	4982
-6.0	103574	32.0	32634	70.0	11883	108.0	4873
-5.0	100260	33.0	31723	71.0	11591	109.0	4767
-4.0	97064	34.0	30840	72.0	11307	110.0	4663
-3.0	93981	35.0	29986	73.0	11031	111.0	4562
-2.0	91008	36.0	29157	74.0	10762	112.0	4464
-1.0	88139	37.0	28355	75.0	10501	113.0	4367
0.0	85371	38.0	27577	76.0	10247	114.0	4274
1.0	82699	39.0	26823	77.0	10000	115.0	4182
2.0	80121	40.0	26092	78.0	9760	116.0	4093
3.0	77632	41.0	25383	79.0	9526	117.0	4006
4.0	75230	42.0	24696	80.0	9299	118.0	3921
5.0	72910	43.0	24030	81.0	9077	119.0	3838
6.0	70670	44.0	23384	82.0	8862	120.0	3757
7.0	68507	45.0	22758	83.0	8653	121.0	3678
8.0	66418	46.0	22150	84.0	8449	122.0	3601
9.0	64399	47.0	21561	85.0	8250	123.0	3526
10.0	62449	48.0	20989	86.0	8057	124.0	3452
11.0	60565	49.0	20435	87.0	7869		
12.0	58745	50.0	19896	88.0	7686		

Troubleshooting Modulating Water Line Control Board

The Bard QW*S3D Series is equipped with a water line control board. The TACO 3-way valve adjustment, conducted by the TACO iSeries Smart Actuator, is generated through the water line control board. The temperature measurement from the sensor located in the blower outlet sends the resistance to the board. The board will forward the resistance reading through the SU and SC terminals when the unit is in dehumidification mode, allowing for the appropriate water flow adjustment to achieve the intended temperature.

For board troubleshooting, a truth table is suppled below (see Table 16).

See page 41 for the modulating water line control sequence of operation.

FIGURE 43
Modulating Water Line Control Board

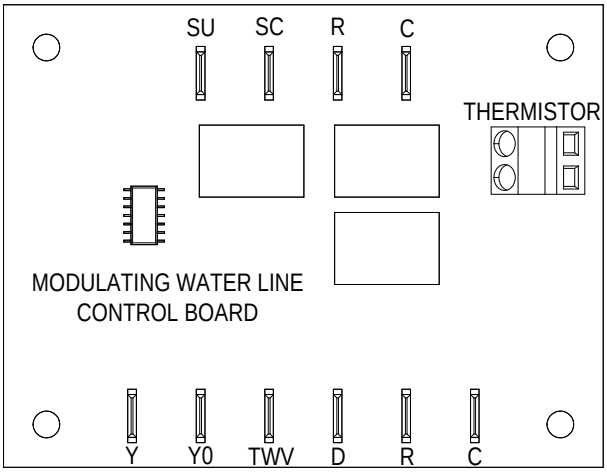

MIS-4140

TABLE 16
Modulating Water Line Control Board Logic

	Inputs from Board				Output from Board
	R	Y	D	TWV	Y0
Full/Part Load Clg or Htg	X	X			X
Dehumidification w/o TWV	X		X		
Three Way Valve, no Dehumidification	X			X	
Full/Part Load Clg or Htg with Dehum, no TWV	X	X	X		X
Full/Part Load Clg or Htg with TWV, no Dehum*	X	X		X	X
Dehumidification	X		X	X	
Full/Part Load Clg or Htg with Dehumidification	X	X	X	X	X

* Not a designed operation mode. If there is a TWV input to the modulating water line control board without a "D" call, the valve/actuator combination will continue to modulate, causing a fault with the flow switch. Troubleshooting should start by referencing the dehumidification relay logic board (Bard P/N 8201-133). See Table 11 on page 53.

NOTE When a "Y" signal becomes active during a dehumidification cycle, the "Y" signal will have a 75-second time delay before "YO" becomes active. If at any point during the 75-second delay a "D" call is no longer required, there will be a 55-second OFF time delay on the "D" terminal. The 55-second OFF time delay runs in parallel with the 75-second delay and will end if the 75-second time delay is removed. This is done to prevent an incidental compressor time delays and to allow the iSmart Actuator time to open up valve to water flow for normal operation.

Compressor Solenoid

A nominal 24-volt direct current coil activates the internal compressor solenoid. The input control circuit voltage must be 18 to 28 volt ac. The coil power requirement is 20 VA. The external electrical connection is made with a molded plug assembly. This plug contains a full wave rectifier to supply direct current to the unloader coil.

Compressor Solenoid Test Procedure – If it is suspected that the unloader is not working, the following methods may be used to verify operation.

1. Operate the system and measure compressor amperage. Cycle the compressor solenoid on and off at 10-second intervals. The compressor amperage should go up or down at least 25%.
2. If Step 1 does not give the expected results, shut unit off. Apply 18 to 28 volt ac to the solenoid molded plug leads and listen for a click as the solenoid pulls in. Remove power and listen for another click as the solenoid returns to its original position.
3. If clicks can't be heard, shut off power, remove the control circuit molded plug from the compressor and measure the solenoid coil resistance (see Table 17).

TABLE 17
Solenoid Coil Resistance

Compressor Model	Solenoid Ohms
ZPS***K4	33.6 Ω
ZPS***K5	350 Ω or 1640 Ω
ZPS***K6	1640 Ω

4. Next, check the molded plug.

Voltage Check: Apply control voltage to the plug wires (18 to 28 volt ac). The measured **dc** voltage at the female connectors in the plug should be around 15 to 27 vdc.

Resistance Check: Measure the resistance from the end of one molded plug lead to either of the two female connectors in the plug. One of the connectors should read close to 0 ohms, while the other should read infinity. Repeat with other wire. The same female connector as before should read zero, while the other connector again reads infinity. Reverse polarity on the ohmmeter leads and repeat. The female connector that read infinity previously should now read close to 0 ohms.

Replace plug if either of these test methods does not show the desired results.

TROUBLESHOOTING GE ECM 5.0™ MOTORS

CAUTION:

Disconnect power from unit before removing or replacing connectors, or servicing motor. To avoid electric shock from the motor's capacitors, disconnect power and wait at least 5 minutes before opening motor.

Symptom	Cause/Procedure
Motor rocks slightly when startin	• This is normal start up for ECM
Motor won't start • No movement	• Check blower turns by hand • Check power at motor • Check low voltage (24 Vac R to C) at motor • Check low voltage connections (G, Y, W, R, C) at motor • Check for unseated pins in connectors on motor harness • Test with a temporary jumper between R - G • Check motor for tight shaft • Perform motor/control replacement check • **Perform Moisture Check**
• Motor rocks, but won't start	• Check for loose or compliant motor mount • Make sure blower wheel is tight on shaft • Perform motor/control replacement check
Motor oscillates up & down while being tested off of blower	• It is normal for motor to oscillate with no load on shaft
Motor starts, but runs erratically • Varies up and down or intermittent	• Check line voltage for variation or "sag" • Check low voltage connections (G, Y, W, R, C) at motor, unseated pins in motor harness connectors • Check "Bk" for erratic CFM command (in variable-speed applications) • Check out system controls, thermostat • **Perform Moisture Check**
• "Hunts" or "puffs" at high CFM (speed)	• Does removing panel or filter reduce "puffing"? - Reduce restriction - Reduce max airflow
• Stays at low CFM despite system call for cool or heat CFM	• Check low voltage (Thermostat) wires and connections • Verify fan is not in delay mode; wait until delay complete • "R" missing/not connected at motor • Perform motor/control replacement check
• Stays at high CFM	• "R" missing/not connected at motor • Is fan in delay mode? - wait until delay time complete • Perform motor/control replacement check
• Blower won't shut off	• Current leakage from controls into G, Y or W? Check for Triac switched thermostat or solid-state relay
Excessive noise • Air noise	• Determine if it's air noise, cabinet, duct or motor noise; interview customer, if necessary • High static creating high blower speed? - Is airflow set properly? - Does removing filter cause blower to slow down? Check filter - Use low-pressure drop filter - Check/correct duct restrictions

Symptom	Cause/Procedure
• Noisy blower or cabinet	• Check for loose blower housing, panels, etc. • High static creating high blower speed? - Check for air whistling through seams in ducts, cabinets or panels - Check for cabinet/duct deformation
• "Hunts" or "puffs" at high CFM (speed)	• Does removing panel or filter reduce "puffing"? - Reduce restriction - Reduce max. airflow
Evidence of Moisture • Motor failure or malfunction has occurred and moisture is present	• Replace motor and Perform Moisture Check
• Evidence of moisture present inside air mover	• Perform Moisture Check

Do	Don't
• Check out motor, controls, wiring and connections thoroughly before replacing motor	• Automatically assume the motor is bad.
• Orient connectors down so water can't get in - Install "drip loops"	• Locate connectors above 7 and 4 o'clock positions
• Use authorized motor and model #'s for replacement	• Replace one motor or control model # with another (unless an authorized replacement)
• Keep static pressure to a minimum: - Recommend high efficiency, low static filters - Recommend keeping filters clean - Design ductwork for min. static, max. comfort - Look for and recommend ductwork improvement, where necessary	• Use high pressure drop filters some have ½" H_2O drop! • Use restricted returns
• Size the equipment wisely	• Oversize system, then compensate with low airflow
• Check orientation before inserting motor connectors	• Plug in power connector backwards • Force plugs

Moisture Check

- Connectors are oriented "down" (or as recommended by equipment manufacturer)
- Arrange harness with "drip loop" under motor
- Is condensate drain plugged?
- Check for low airflow (too much latent capacity)
- Check for undercharged condition
- Check and plug leaks in return ducts, cabinet

Comfort Check

- Check proper airflow settings
- Low static pressure for lowest noise
- Set low continuous-fan CFM
- Use humidistat and 2-speed cooling units
- Use zoning controls designed for ECM that regulate CFM
- Thermostat in bad location?

Replacing ECM Control Module

To replace the control module for the GE variable-speed indoor blower motor you need to take the following steps:

1. You MUST have the correct replacement module. The controls are factory programmed for specific operating modes. Even though they look alike, different modules may have completely different functionality.

USING THE WRONG CONTROL MODULE VOIDS ALL PRODUCT WARRANTIES AND MAY PRODUCE UNEXPECTED RESULTS.

2. Begin by removing AC power from the unit being serviced. **DO NOT WORK ON THE MOTOR WITH AC POWER APPLIED.** To avoid electric shock from the motor's capacitors, disconnect power and wait at least 5 minutes before opening motor.
3. It is not necessary to remove the motor from the blower assembly, nor the blower assembly from the unit. Unplug the two cable connectors to the motor control assembly. There are latches on each connector. **DO NOT PULL ON THE WIRES.** The plugs remove easily when properly released.
4. Locate the screws that retain to the motor control bracket to the sheet metal of the unit and remove them. Remove two (2) nuts that retain the control to the bracket and then remove two (2) nuts that retain sheet metal motor control end plate. *Refer to Figure 44.*
5. Disconnect the three (3) wires interior of the motor control by using your thumb and forefinger squeezing the latch tab and the opposite side of the connector plug, gently pulling the connector. **DO NOT PULL ON THE WIRES, GRIP THE PLUG ONLY.** *Refer to Figure 45.*
6. The control module is now completely detached from the motor. Verify with a standard ohmmeter that the resistance from each motor lead (in the motor plug just removed) to the motor shell is >100K ohms. *Refer to Figure 45.* (Measure to unpainted motor end plate.) If any motor lead fails this test, do not proceed to install the control module. **THE MOTOR IS DEFECTIVE AND MUST BE REPLACED.** Installing the new control module will cause it to fail also.
7. Verify that the replacement control is correct for your application. Refer to the manufacturer's authorized replacement list. **USING THE WRONG CONTROL WILL RESULT IN IMPROPER OR NO BLOWER OPERATION.** Orient the control module so that the 3-wire motor plug can be inserted into the socket in the control. Carefully insert the plug and press it into the socket until it latches. **A SLIGHT CLICK WILL BE HEARD WHEN PROPERLY INSERTED.**
8. Reverse the steps #5, 4, 3 to reconnect the motor control to the motor wires, securing the motor control cover plate, mounting the control to the bracket, and mounting the motor control bracket back into the unit. **MAKE SURE THE ORIENTATION YOU SELECT FOR REPLACING THE CONTROL ASSURES THE CONTROL'S CABLE CONNECTORS WILL BE LOCATED DOWNWARD IN THE APPLICATION SO THAT WATER CANNOT RUN DOWN THE CABLES AND INTO THE CONTROL.** ***DO NOT OVERTIGHTEN THE BOLTS.***
9. Plug the 16-pin control plug into the motor. The plug is keyed. Make sure the connector is properly seated and latched.
10. Plug the 5-pin power connector into the motor. Even though the plug is keyed, **OBSERVE THE PROPER ORIENTATION. DO NOT FORCE THE CONNECTOR.** It plugs in very easily when properly oriented. **REVERSING THIS PLUG WILL CAUSE IMMEDIATE FAILURE OF THE CONTROL MODULE.**
11. Final installation check. Make sure the motor is installed as follows:
    a. Motor connectors should be oriented between the 4 o'clock and 8 o'clock positions when the control is positioned in its final location and orientation.
    b. Add a drip loop to the cables so that water cannot enter the motor by draining down the cables. *Refer to Figure 46.*

The installation is now complete. Reapply the AC power to the HVAC equipment and verify that the new motor control module is working properly. Follow the manufacturer's procedures for disposition of the old control module.

Figure 44
Control Disassembly

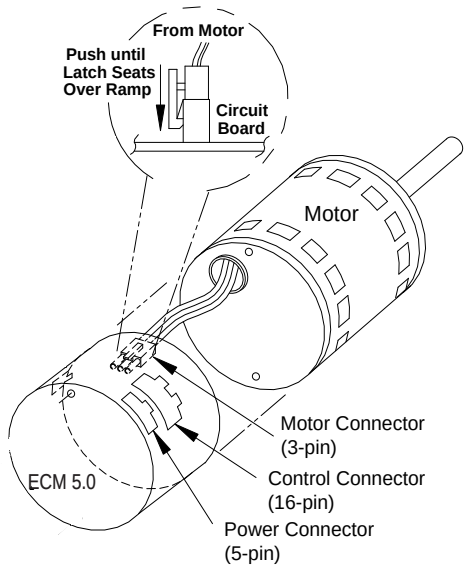

Figure 45
Winding Test

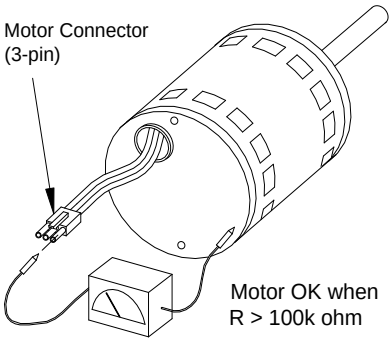

Figure 46
Drip Loop

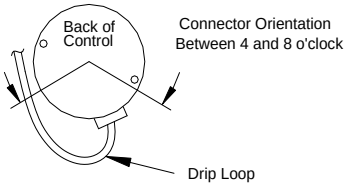

QUICK REFERENCE TROUBLESHOOTING CHART FOR WATER TO AIR HEAT PUMP

● DENOTES COMMON CAUSE
✕ DENOTES OCCASIONAL CAUSE

		POWER SUPPLY																		WATER COIL SECTION																												INDOOR SECTION						AUX.	
		Line Voltage										Control Circuit								Compressor					Refrigerant System								Water Solenoid			Rev. Valve		Water Coil						Indoor Blower Motor and Coil						Heat	Gen.
		Power Failure	Blown Fuse or Tripped Breaker	Faulty Wiring	Loose Terminals	Low Voltage	Defective Contacts in Contactor	Compressor Overload	Potential Relay	Run Capacitor	Start Capacitor	Faulty Wiring	Loose Terminals	Control Transformer	Low Voltage	Thermostat	Contactor Coil	Pressure Controls (High or Low)	Indoor Blower Relay	Discharge Line Hitting Inside of Shell	Bearings Defective	Seized	Valve Defective	Motor Wingings Defective	Refrigerant Charge Low	Refrigerant Overcharge	High Head Pressure	Low Head Pressure	High Suction Pressure	Low Suction Pressure	Non-Condensables	Unequalized Pressures	Solenoid Valve Stuck Closed (Htg)	Solenoid Valve Stuck Closed (Clg)	Solenoid Valve Stuck Open (Htg or Clg)	Leaking	Defective Valve or Coil	Plugged or Restricted Metering Device (Htg)	Scaled or Plugged Coil (Htg)	Scaled or Plugged Coil (CLg)	Water Volume Low (Htg)	Water Volume Low (Clg)	Low Water Temperature (Htg)	Plugged or Restricted Metering Device (Clg)	Fins Dirty or Plugged	Motor Winding Defective	Air Volume Low	Air Filters Dirty	Undersized or Restricted Ductwork	Auxillary Heat Upstream of Coil	
Heating or Cooling Cycles	Compressor Will Not Run No Power at Contactor	●	●	●	●		+	+				●	●	●	+	+	●	●																																			
Heating or Cooling Cycles	Compressor Will Not Run Power at Contactor			●	●	●		●	●	●	●										+	●		●								●																					
Heating or Cooling Cycles	Compressor "Hums" But Will Not Start			●	●	●	+		●	●	●										●	●		●								●																					
Heating or Cooling Cycles	Compressor Cycles on Overload			●	●	●	+	●	●	●	●										+		+	+	●	●	+		+		●					+			+	+	+	+			+	+	+	●	+		
Heating or Cooling Cycles	Thermostat Check Light Lite-Lockout Relay																	●																																			
Heating or Cooling Cycles	Compressor Off on High Pressure Control																	+	●							●					●			●				+		+		●		+	●	●	●	●	●	●	
Heating or Cooling Cycles	Compressor Off on Low Pressure Control																		+						●			●		●		●	●						+		●		+	●								
Heating or Cooling Cycles	Compressor Noisy																			+	+	●																															
Heating or Cooling Cycles	Head Pressure Too High																									●					●		●			+	+		●		●		+	+	+	●	●	+	●	
Heating or Cooling Cycles	Head Pressure Too Low																						●		●					●			+		+			●		●		●									
Heating or Cooling Cycles	Suction Pressure Too High																						●			●	●								+																
Heating or Cooling Cycles	Suction Pressure Too Low																								●			+					●					+	●		●		+	+	●	+	●	●	+		
Heating or Cooling Cycles	I.D. Blower Will Not Start	●	●	●	●							●	●	●	+	+			●																																		
Heating or Cooling Cycles	I.D. Coil Frosting or Icing																								●					●														+	●	●	●	●	+		
Heating or Cooling Cycles	High Compressor Amps					●				●											●	●		+		●	●		●		●							+		●		●		+	●	●	●	●	+	+	
Heating or Cooling Cycles	Excessive Water Usage																																		●				+	+											
Cooling Cycle	Compressor Runs Continuously – No Cooling																						●		●					●										+		+		+	●	●	●	●	+		
Cooling Cycle	Liquid Refrigerant Flooding Back To Compressor																									●	●																		●	●	●	●	+		
Heating Cycle	Compressor Runs Continuously – No Heating																						●		●					●			●			+		+	●		●		+									
Heating Cycle	Reversing Valve Does Not Shift			●	●																				+			+									●															
Heating Cycle	Liquid Refrigerant Flooding Back To Compressor																									●	●						●			+	+		●		●		●									
Heating Cycle	Aux. Heat on I.D. Blower Off			●	●							●	●			+			●																												●					
Heating Cycle	Excessive Operation Costs			+	+											+									●	●							+	+		●	●		+	+	+				+	+	+				
Heating Cycle	Ice in Water Coil			+	+																				●								●				●		+		●										

Ground Source Heat Pump Performance Report

Date: _____ **Technician:** _____

Company Reporting: _____ **Contact Phone:** _____

Owner's Name: _____ **Owner's Address:** _____

1. **Model/Serial Numbers: (For 3-Pc. Geo-Trio system, include coil/compressor/blower information)**
   - **Model Number(s):** _____
   - **Serial Number(s):** _____
2. **Accessory Information:**
   - **Thermostat Mfgr.** _____ **Model/Part Number:** _____
   - **Flow-Center* Mfgr.** _____ **Model/Part Number:** _____
     ***if applicable**
3. **Open-Loop Water Source Information:**
   - **Where/how is water discharged** _____
4. **Closed-Loop Water Source Information:**

   ☐ **Horizontal Trenches** ☐ **Horizontally Bored** ☐ **Vertical** ☐ **Pond/Lake**

   ☐ **Other (Describe)** _____
   - **Type of Antifreeze**_____ **% of Antifreeze** _____ **Freezepoint °F** _____
   - **Piping Material** _____ **Diameter of Loop Pipe** _____ **Diameter of Header Pipe** _____
   - **Length of Loops** _____ **Pressurized/Non-Pressurized Flow Center** _____
   - **If Horz. Trench: Loops per trench** ____ **L x W x D of trenches** _____

     Total Number of Trenches _____ **Total Number of Loops** _____
   - **If Horz. Bored: Avg. Depth of Bores** _____ **Grout was used (Y/N)** _____

     Total Number of Bores _____ **Total Number of Loops** _____
   - **If Vert. Bored: Depth of Bores** _____ **Grout was used (Y/N)** _____

     Total Number of Bores _____ **Total Number of Loops** _____
   - **If Pond/Lake: Approx. Acreage of Pond/Lake** _____ **Depth of Loops** _____

     Style of Loops: (coils, mats, Lake Plates) _____ **Total Number of Loops** _____

General Notes: _____

_____

_____

The following information is needed to verify performance of the system.

Note: Before testing, disable desuperheater, auxiliary electric heat, and any ventilation equipment that may allow outdoor air into the system. Measurements should be taken after a minimum 10 min. run time to ensure "steady-state" of operation. Temperature and pressure measurements should be taken with a single thermometer and pressure gauge to eliminate discrepancies between multiple devices.

Fluid Data:	*1st Stg. Cool*	*2nd Stg. Cool*	*1st Stg. Heat*	*2nd Stg. Heat*
5. Entering Fluid Temperature °F	_____	_____	_____	_____
6. Leaving Fluid Temperature °F	_____	_____	_____	_____
7. Entering Fluid Pressure psi	_____	_____	_____	_____
8. Leaving Fluid Pressure psi	_____	_____	_____	_____
9. Pressure Drop through coil (psi)	_____	_____	_____	_____

Using the specific model number and pressure drop, refer to Water Coil Pressure Drop Chart on page 6 to find gallons-per-minute flow through water coil.

10. GPM through coil	_____	_____	_____	_____

Air Data:	*1st Stg. Cool*	*2nd Stg. Cool*	*1st Stg. Heat*	*2nd Stg. Heat*
11. Dry Bulb Return Air Temp °F	_____	_____	_____	_____
12. Wet Bulb Return Air Temp °F	_____	_____	_____	_____
13. Dry Bulb Supply Temperature °F	_____	_____	_____	_____
14. Wet Bulb Supply Air Temp °F	_____	_____	_____	_____
15. Return Static Pressure "WC	_____	_____	_____	_____
16. Supply Static Pressure "WC	_____	_____	_____	_____

Refrigerant Data:	*1st Stg. Cool*	*2nd Stg. Cool*	*1st Stg. Heat*	*2nd Stg. Heat*
17. Head Pressure psi	_____	_____	_____	_____
18. Suction Pressure psi	_____	_____	_____	_____
19. Liquid Line Temperature °F	_____	_____	_____	_____

Note: Liquid line temperature should be measure directly before metering device.

20. Suction Line Temperature °F	_____	_____	_____	_____

Note: Suction line temperature should be measured approximately 6" from compressor.

Calculate the subcooling from line #17 and Line #19 (Typically 10°F to 30°F)

21. Coil Subcooling °F	_____	_____	_____	_____

Calculate the superheat from line #18 and Line #20 (Typically 6°F to 12°F)

22. Coil Superheat °F	_____	_____	_____	_____

Electrical Data:_	*1st Stg. Cool*	*2nd Stg. Cool*	*1st Stg. Heat*	*2nd Stg. Heat*
23. Voltage at Load Side of Contactor	_____	_____	_____	_____

Note: Voltage must be within 197VAC to 253VAC (for 208V/230V), 414VAC to 506VAC (for 460V)

24. Amperage Draw of Compressor	_____	_____	_____	_____
25. Amperage Draw of Blower Motor	_____	_____	_____	_____

Note: Consult Electrical Specifications tables on page 8 to compare against typical run load amps.