INSTALLATION INSTRUCTIONS

11EER Q-TEC™ QH Series Packaged Heat Pump

Models:

Q24H4-A	Q30H4-A	Q36H4-A	Q43H4-A	Q48H4-A
Q24H4-B	Q30H4-B	Q36H4-B	Q43H4-B	Q48H4-B
Q24H4-C	Q30H4-C	Q36H4-C	Q43H4-C	Q48H4-C
Q24H4DA	Q30H4DA	Q36H4DA	Q43H4DA	Q48H4DA
Q24H4DB	Q30H4DB	Q36H4DB	Q43H4DB	Q48H4DB
Q24H4DC	Q30H4DC	Q36H4DC	Q43H4DC	Q48H4DC

Bard® SINCE 1914
Climate Control Solutions

Bard Manufacturing Company, Inc.
Bryan, Ohio 43506
www.bardhvac.com

Manual: 2100-742E
Supersedes: 2100-742D
Date: 5-14-21

CONTENTS

Getting Other Information and Publications 3

Q-TEC™ General Information 4
- Q-TEC Model Nomenclature 4
- Shipping Damage 4
- Unit Removal from Skid 4
- Handling Unit after Removal from Skid 6
- General 6
- Minimum Installation Height 7
- Duct Work 8
- Filters 8
  - Switching Filter Sizes 9

Fresh Air Intake 9

Vent Options 9
- Barometric Fresh Air Damper (Standard) 9
- Commercial Room Ventilator (Option) 10
- Q-TEC Energy Recovery Ventilator (Option) 10

Installation 11
- Basic Installation Design and Application Planning .. 11
- Mounting the Unit 11
- Condensate Drain 13
  - Optional Rear Drain Kits 14
- Indoor Ducted and Non-Ducted Applications 18
  - Indoor Supply Airflow 18
  - Indoor Return Airflow 18
  - Ducted Applications 18
  - Free Blow Applications 18
  - Thermostat or Indoor Temperature Sensor Placement 18
- Wiring – Main Power 20
  - High Voltage Connections 20
- Wiring – Low Voltage 21
  - Low Voltage Connections 21
  - Unit Shutdown Feature 21
  - Balanced Climate™ Feature 21
  - Dehumidification Feature 21
  - Ventilation Features 21
  - Low Ambient Control 22
    - Outdoor Temperature Switch and Freeze Protection Thermostat 22

Start Up 26
- General 26
- Topping Off System Charge 26
- Safety Practices 26
- Important Installer Notes 26
- High and Low Pressure Switches 26
- Three Phase Scroll Compressor Start Up Information 27
- Phase Monitor 27
- Condenser Fan Operation 27
- Service Hints 27
- Sequence of Operation 27
  - Cooling 27
  - Heating 27
  - Balanced Climate™ Mode 28
- Defrost Cycle 28
  - Low Pressure Switch Bypass Operation 30
  - High Pressure Switch Operation 30
- Vent Connection Plug 30
- Pressure Service Ports 30

Service 31
- Solid State Heat Pump Control Troubleshooting Procedure 31
- Checking Temperature Sensor Outside Unit Circuit 32
- Troubleshooting ECM 142R Outdoor Fan Motors 33
  - Replacing the Motor 34
- Troubleshooting ECM Indoor Blower Motors 35
  - Replacing ECM Control Module 36
- Fan Blade Setting Dimensions 38
- R-410A Refrigerant Charge 38
- Removal of Fan Shroud 38

Dehumidification Unit Instructions 46
- Dehumidification Circuit 46
- Dehumidification Sequence of Operation 46
- Balanced Climate Mode 46
- Electronic Expansion Valve 46
  - Operation 46
  - EEV Instructions for Vacuuming, Reclaiming and Charging Unit 46
  - Troubleshooting the Electronic Expansion Valve 47
    - Control Board 48
    - Electronic Expansion Valve 48
    - Relay in EEV Control Box 48
    - Stator Coil 48
    - Transducer Sensor 48
    - Thermistor Sensor 49
- Heat Pump Circuit Diagrams 50
- Q24HD Cooling and Dehumidification Application Data 51
- Q30HD Cooling and Dehumidification Application Data 52
- Q36HD Cooling and Dehumidification Application Data 53
- Q43HD Cooling and Dehumidification Application Data 54
- Q48HD Cooling and Dehumidification Application Data 55

TABLES

Table 1	Wall Thermostats	23
Table 2	Humidity Controls	23
Table 3	CO_2 Controllers	23
Table 4	Thermostat Wire Size	23
Table 5	Troubleshooting	31
Table 6	Temperature vs. Resistance	32
Table 7	Troubleshooting ECM 142R Outdoor Fan Motors	34
Table 8	Troubleshooting ECM Blower Motors	37
Table 9	Fan Blade Dimensions	38
Table 10A	Cooling Pressure – Standard Airflow	39
Table 10B	Heating Pressure – Standard Airflow	39
Table 11	Cooling Pressure – Balanced Climate Airflow	40
Table 12	Electrical Specifications Q**H4 Series	41
Table 13	Indoor Blower Performance	42
Table 14	Maximum ESP Electric Heat Only	42
Table 15	Electric Heat	42

Table 16 Electronic Expansion Valve Troubleshooting 47
Table 17 10K OHM NTC Sensor: Temperature/ Resistance 49
Table 18 Dehumidification Relay Logic Board.....56
Table 19 Electrical Specifications Q**H4D Series .. 57

FIGURES

Figure 1 Air Seal Under Q-TEC Unit.....5
Figure 2 Removal of Q-TEC Unit from Skid.....5
Figure 3 Fan Assembly Removal.....6
Figure 4 Q-TEC Unit on Appliance Cart.....6
Figure 5 Installation with Duct-Free Plenum.....7
Figure 6 Ducted Application 7
Figure 7 Supply Duct Connections.....8
Figure 8 Filter Location 8
Figure 9 Filter Tabs in Up Position.....9
Figure 10 Bend FIlter Tabs Down 9
Figure 11 Fresh Air Damper Assembly 9
Figure 12 Remove Compressor Shipping Brackets....11
Figure 13A Unit Mounting – Method 1.....12
Figure 13B Unit Mounting – Method 2.....12
Figure 14 Remove Locking Screws from Wheels.....13
Figure 15 Optional Side Drain (Side View).....13
Figure 16 Standard Rear Drain.....13
Figure 17 Rear Drain (Top View).....14
Figure 18A 15
Figure 18B 15
Figure 18C 16
Figure 18D 17
Figure 19 Unit Dimensions.....19
Figure 20 High Voltage Connections 20
Figure 21 Thermostat Connections 24
Figure 22 Thermostat Connections 25
Figure 23 Defrost Control Board..... 29
Figure 24 Control Disassembly.....36
Figure 25 Winding Test.....36
Figure 26 Drip Loop.....36
Figure 27 Control Connector Motor Half 37
Figure 28 Fan Blade Setting 38
FIgure 29 Fan Shroud Removal 38
Figure 30 Electronic Expansion Valve (EEV) and Service Tool.....47
Figure 31 High Side Connection.....47
Figure 32 Voltage to Pressure: Suction Pressure Transducer 48

GRAPHS

Graph 1 Q24H4 FAD Ventilation Delivery 43
Graph 2 Q30H4 FAD Ventilation Delivery 43
Graph 3 Q36H4 FAD Ventilation Delivery 44
Graph 4 Q43H4 FAD Ventilation Delivery 44
Graph 5 Q48H4 FAD Ventilation Delivery 45

GETTING OTHER INFORMATION AND PUBLICATIONS

These publications can help when installing the air conditioner. They can usually be found at the local library or purchased directly from the publisher. Be sure to consult the current edition of each standard.

National Electrical Code.....ANSI/NFPA 70

Standard for the Installation of Air Conditioning and Ventilating Systems
.....ANSI/NFPA 90A

Standard for Warm Air Heating and Air Conditioning Systems
.....ANSI/NFPA 90B

Load Calculation for Winter and Summer Air Conditioning
..... ACCA Manual J Residential

Duct Design for Residential Winter and Summer Air Conditioning and Equipment Selection
..... ACCA Manual D

For more information, contact these publishers:

ACCA **Air Conditioning Contractors of America**
1712 New Hampshire Ave. N.W.
Washington, DC 20009
Telephone: (202) 483-9370
Fax: (202) 234-4721

ANSI **American National Standards Institute**
11 West Street, 13th Floor
New York, NY 10036
Telephone: (212) 642-4900
Fax: (212) 302-1286

ASHRAE **American Society of Heating, Refrigeration and Air Conditioning Engineers, Inc.**
1791 Tullie Circle, N.E.
Atlanta, GA 30329-2305
Telephone: (404) 636-8400
Fax: (404) 321-5478

NFPA **National Fire Protection Association**
Batterymarch Park
P.O. Box 9101
Quincy, MA 02269-9901
Telephone: (800) 344-3555
Fax: (617) 984-7057

Q-TEC Model Nomenclature

Q 36 H 4 – A 0Z X P X X X X

MODEL SERIES

CAPACITY
24 – 2 Ton
30 – 2½ Ton
36 – 3 Ton
43 – 3½ Ton
48 – 4 Ton

H – Heat Pump

REVISION

SPECIALTY PRODUCTS
(–) – Standard Unit
D – Hot Gas Reheat Dehumidification

VOLTS & PHASE
A – 230/208/60/1
B – 230/208/60/3
C – 460/60/3

ELECTRIC HEAT
00 – 0kW with Lug Connection
0Z – 0kW with Circuit Breaker
05 - 15kW with Circuit Breaker
See Electrical Specifications for further details.

VENTILATION OPTIONS
X – Fresh Air Damper
B – Blank-off Plate
R – Energy Recovery Ventilator
S – Partial Flow Economizer, JADE
V – Commercial Ventilator, Modulating

FILTER OPTIONS
X – 1" MERV 2 Disposable Filter
M – 2" MERV 11 Disposable Filter
N – 2" MERV 13 Disposable Filter
P – 2" MERV 8 Disposable Filter
B – NPBI TECH + 2" MERV 13 Disposable Filter
A – UV-C + 2" MERV 13 Disposable Filter

COLOR OPTIONS
X – Beige Baked Enamel Finish
V – Vinyl Coated
4 – Buckeye Gray Baked Enamel Finish

PLACEHOLDER
X – Standard Unit
Q – QSP Plenum Option

COIL OPTIONS
X – Standard
1 – Phenolic Coated Evaporator
2 – Phenolic Coated Condenser
3 – Phenolic Coated Evaporator and Condenser

ACCESSORIES AND CONTROL OPTIONS
X – Standard Controls
E – Standard Controls, Low Ambient Control (LAC)
R – Standard Controls, LAC, Outdoor Thermostat (ODT)

Shipping Damage

Upon receipt of equipment, the carton should be checked for external signs of shipping damage. The skid must remain attached to the unit until the unit is ready for installation. If damage is found, the receiving party must contact the last carrier immediately, preferably in writing, requesting inspection by the carrier's agent.

Unit Removal from Skid

⚠ WARNING

Heavy item hazard.

Use more than one person to handle unit.

Check unit wheels to ensure that wheels are locked before removing from skid.

Failure to do so could result in unit damage or serious injury.

It is ***not*** recommended that the unit be removed from the skid with a fork lift as the air seal under the unit could be damaged (see Figure 1).

The shipping brackets on each side of the unit must be removed and discarded (see Figure 2). The return air grille panel can be removed to provide a place to hold the unit.

The unit can be tipped forward and slid down the edge of the skid until the front wheels touch the ground. The wheels will not roll as they are shipped from the factory locked. The back of the skid will have to be held down to keep it from tipping up. The skid can be slid out from under the unit. The unit can then be set upright.

FIGURE 1
Air Seal Under Q-TEC Unit

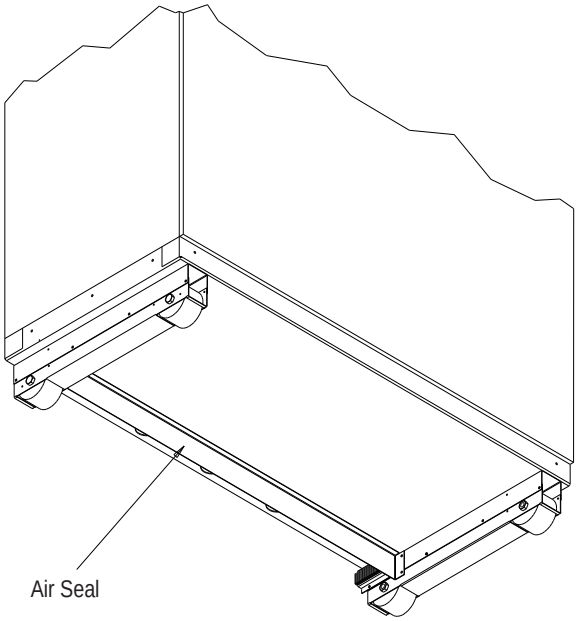

MIS-1008

FIGURE 2
Removal of Q-TEC Unit from Skid

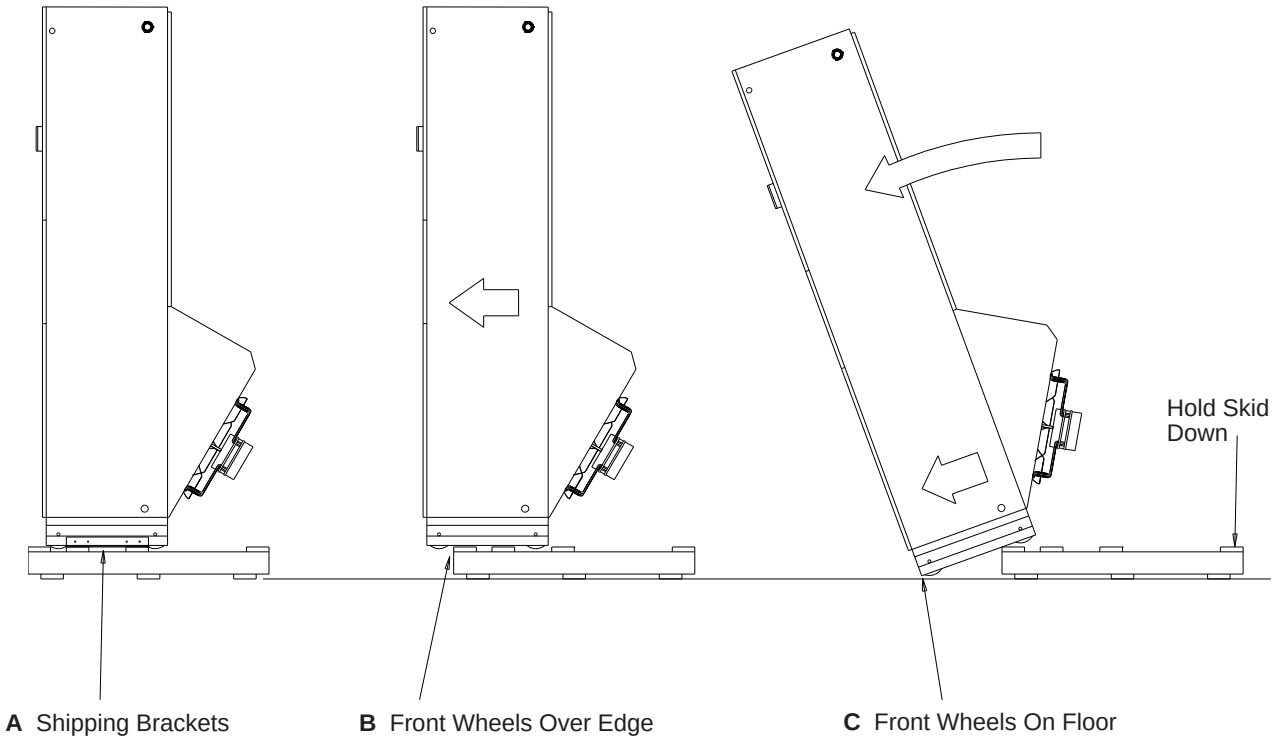

MIS-1007

Handling Unit after Removal from Skid

⚠ CAUTION

Be careful pushing unit on rollers to prevent the unit from tipping over.

Failure to do so could result in personal injury.

The unit will have to be turned sideways and removed from skid to fit through a doorway. If the door height allows, the unit can be slid sideways through the door. The fan assembly can be easily removed to reduce depth to 34” for fitting through 36” doorway (see Figure 3).

FIGURE 3
Fan Assembly Removal

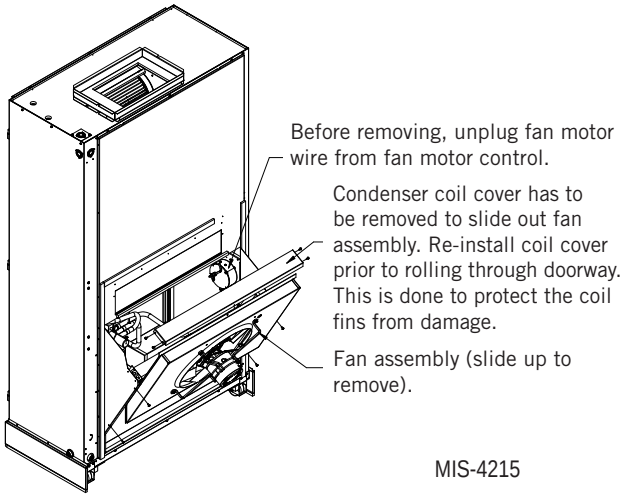

If the unit cannot be slid through the doorway, then the unit will have to be put on a appliance cart and tipped down to roll through the doorway. It is recommended that a strap be used hold the unit down on the cart. The wheels of the unit **must be locked**. If the wheels were allowed to roll, the unit could roll off the cart. **The unit should always be carted from the right side** which is the side where the compressor is located (see Figure 4).

The blade of the appliance cart should be slid under the wheels of the unit. The strap of the appliance cart should be placed around the unit and strapped tight. Help will be required to tip the unit back on to the cart. The unit can be leaned far enough back to be rolled through the doorway. Be careful when setting the unit back up to keep from damaging the unit.

FIGURE 4
Q-TEC Unit on Appliance Cart

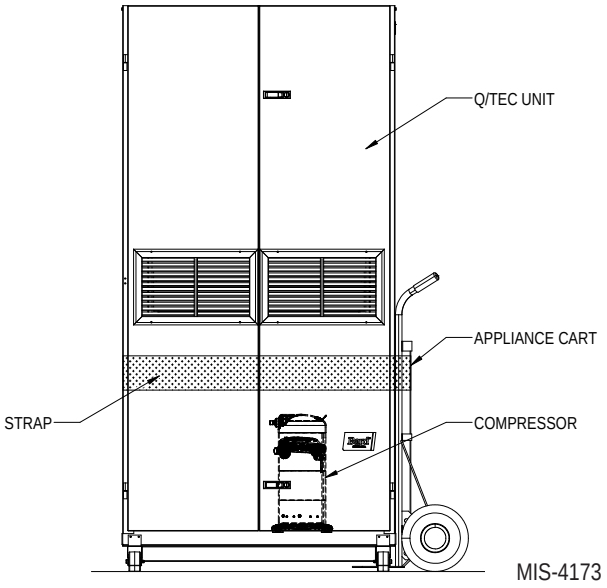

General

The equipment covered in this manual is to be installed by trained, experienced service and installation technicians.

A QWS Series wall sleeve supplied as a separate accessory must be ordered and installed with Q-TEC unit.

The unit is designed for use with or without duct work. For use without duct work, Plenum Box QPB36 is recommended.

These instructions explain the recommended method to install the air cooled self-contained unit and the electrical wiring connections to the unit.

These instructions and any instructions packaged with any separate equipment required to make up the entire air conditioning system should be carefully read before beginning the installation. Note particularly “Start Procedure” and any tags and/or labels attached to the equipment.

While these instructions are intended as a general recommended guide, they do not supersede any national and/or local codes in any way. Authorities having jurisdiction should be consulted before the installation is made. See page 3 for information on codes and standards.

Size of unit for a proposed installation should be based on heat loss calculation made according to methods of Air Conditioning Contractors of America (ACCA). The air duct should be installed in accordance with the Standards of the National Fire Protection Systems of Other Than Residence Type, NFPA No. 90A, and Residence Type Warm Air Heating and Air Conditioning Systems, NFPA No. 90B. Where local regulations are at a variance with instructions, installer should adhere to local codes.

Minimum Installation Height

The minimum installation height of the unit with a free blow plenum is 8' 6". This provides enough clearance for the plenum to be removed (see Figure 5).

The minimum installation height for ducted applications is 8' 4-1/2". This provides enough clearance to install the duct work (see Figure 6).

FIGURE 5
Installation with Duct-Free Plenum

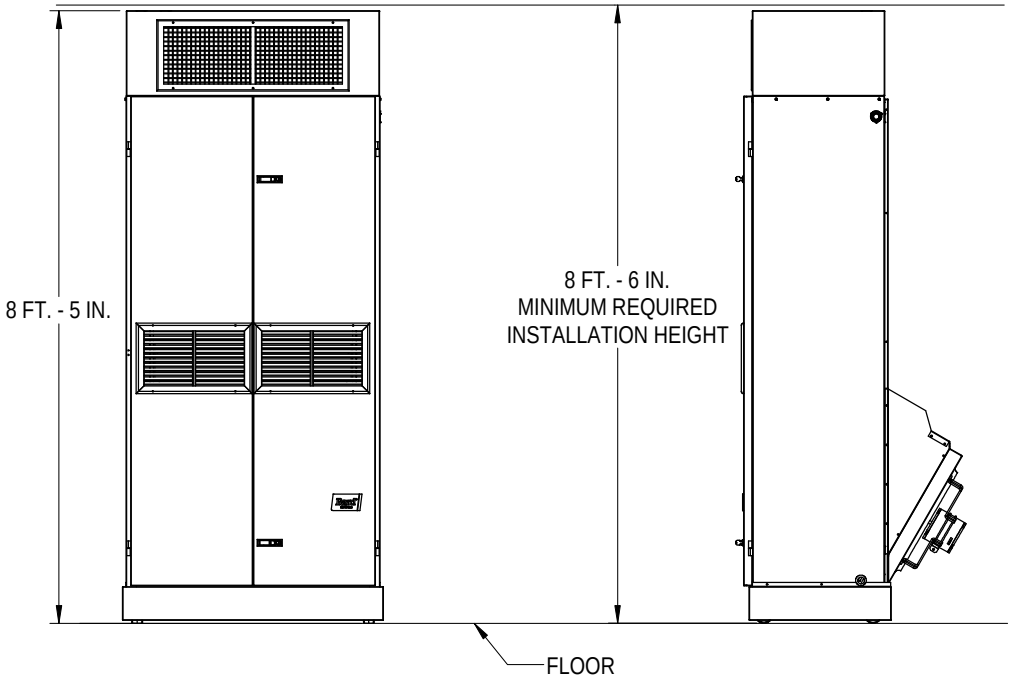

MIS-4174

FIGURE 6
Ducted Application

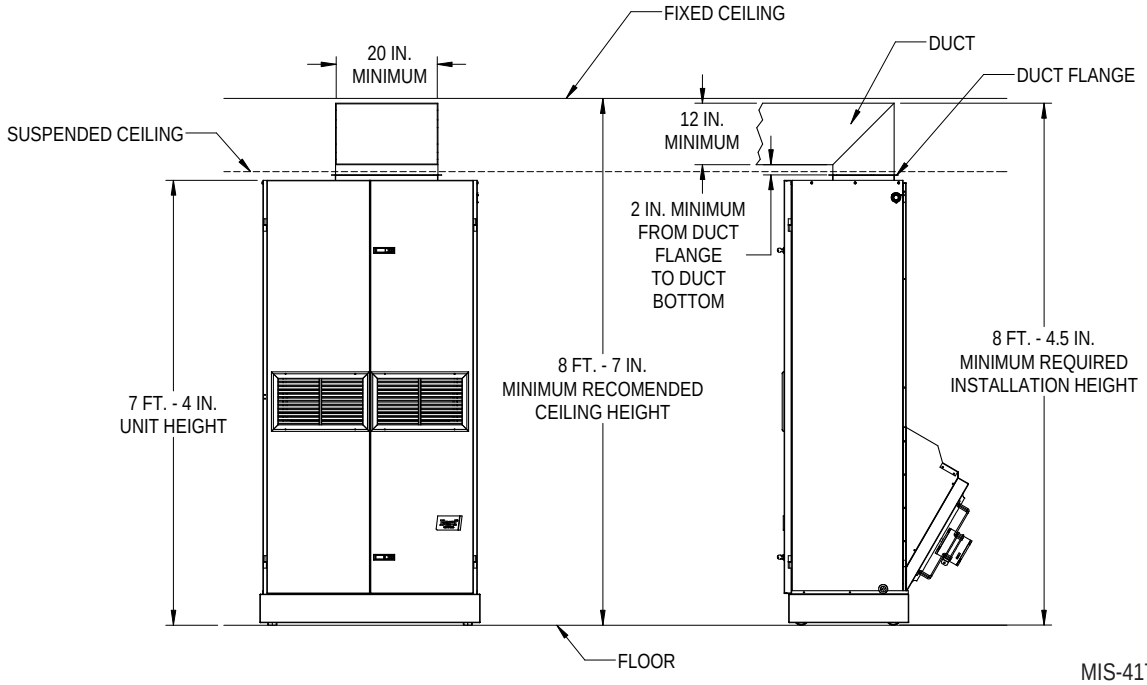

MIS-4175

Duct Work

All duct work must be properly sized for the design airflow requirement of the equipment. Air Conditioning Contractors of America (ACCA) is an excellent guide to proper sizing. All duct work or portions thereof not in the conditioned space should be properly insulated in order to both conserve energy and prevent condensation or moisture damage.

Refer to Maximum ESP of Operation – Electric Heat Only table on page 42.

Design the duct work according to methods given by the Air Conditioning Contractors of America (ACCA). When duct runs through unheated spaces, it should be insulated with a minimum of 1" of insulation. Use insulation with a vapor barrier on the outside of the insulation. Flexible joints should be used to connect the duct work to the equipment in order to keep the noise transmission to a minimum.

The Q-TEC series heat pump has provision to attach a supply air duct to the top of the unit. Duct connection size is 12" x 20". The duct work is field supplied and must be attached in a manner to allow for ease of removal when it becomes necessary to slide the unit out from the wall for service. See Figure 7 for suggested attachment method.

FIGURE 7
Supply Duct Connections

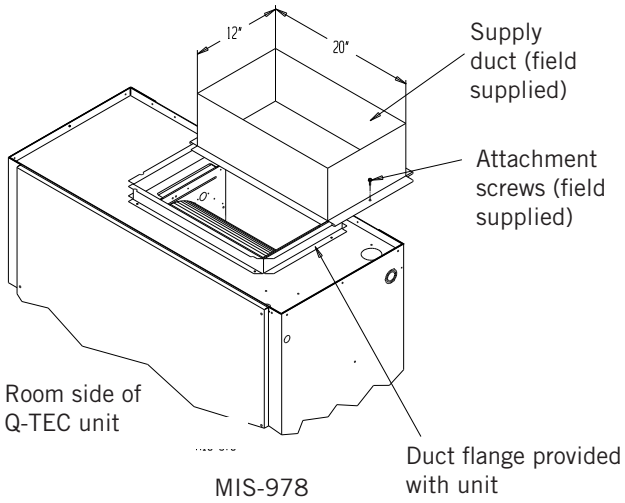

NOTE: *Unit cabinet, supply air duct and duct free plenum are approved for "0" clearance to combustible material.*

The Q-TEC series heat pumps are designed for use with free return (non-ducted) and either free blow with the use of QPB Plenum Box or a duct supply air system.

The QPB and QPBHW Plenum Box mounts on top of the unit and has both vertically and horizontally adjustable louvers on the front discharge grille.

For hot water coil option, a QPBHW**-F for free blow or QPBHW**-D for ducted airflow is used.

When used with a ducted supply, a Q4CX Cabinet Extension can be used to conceal the duct work above the unit to the ceiling. This extends 20" above the unit for a total height above the floor of 10'-7/8". The unit is equipped with a variable speed indoor blower motor which increases in speed with an increase in duct static pressure. The unit will therefore deliver proper rated air flow up to the maximum ESP shown in Table 14 on page 42. However, for quiet operation of the air system, the duct static should be kept as low as practical, within the guidelines of good duct design.

Filters

The filters can be serviced from the front by opening the hinged main doors (see Figure 8). Two (2) 1" throwaway filters come standard with each unit. Additional 1" and 2" filter options are available as optional accessories.

NOTE: *When installing new filters, make sure that airflow arrows on filters point up.*

FIGURE 8
Filter Location

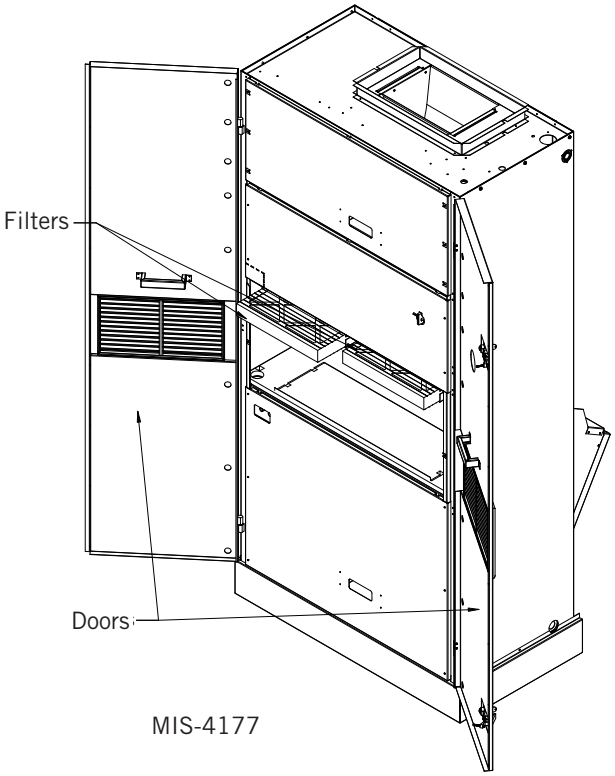

Switching Filter Sizes

To switch from 1" to 2" filters, remove the filter slide and bend the tabs down out of the way to accommodate the 2" filter (see Figures 9 and 10).

FIGURE 9
Filter Tabs in Up Position

FIGURE 10
Bend Filter Tabs Down

Fresh Air Intake

This unit may be equipped with a fresh air damper assembly. The damper blade is locked in the closed position when the unit is shipped from the factory. To allow the damper to operate, remove the two plastic locking pins, one on each end of the blade. This will allow for maximum fresh airflow. The damper blade will now open when the indoor blower is operating. If less than maximum fresh airflow is required, re-insert the plastic pins to limit damper blade opening to desired level. Two extra pins are provided (taped to the inside of the assembly) which may be used to hold the blade in some position other than minimum or maximum position. This fresh air assembly is located in the rear of the unit and to gain access to make these adjustments remove the air filter service door.

All capacity, efficiency and cost of operation information as required for Department of Energy "Energyguide" Fact Sheets are based upon the fresh air blank-off plate in place and is recommended for maximum energy efficiency.

The blank-off plate is available upon request from the factory and is installed in place of the fresh air damper shipped with each unit.

Vent Options

Barometric Fresh Air Damper (Standard)

Before starting, make sure the power has been turned off. The return air grille panel must be removed. The fresh air damper assembly can be seen on the back of the unit (see Figure 11).

1. The fresh air damper is attached to the back of the unit with one screw on either side of the assembly. Both of the screws must be removed.
2. Once the mounting screws are removed, tilt the assembly down and lift it out.

The mist eliminator can be seen through the opening. The mist eliminator must be raised up and the bottom can be pulled toward the front of the unit and removed.

FIGURE 11
Fresh Air Damper Assembly

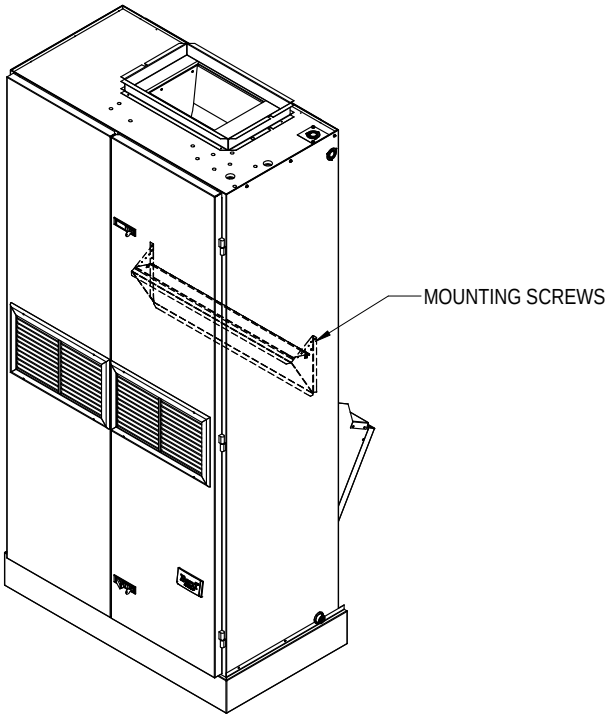

MIS-4182

Commercial Room Ventilator (Option)

Before starting, make sure the power has been turned off. The commercial room ventilator (CRV) can be seen after the main front doors are opened. The CRV must be removed to gain access to the mist eliminator.

1. The two mounting screws in the front of the CRV must be removed.
2. The power connectors for the CRV which are located on the left side (unplug from left side of voltage box in the control panel) must be disconnected. Squeeze the tabs on the sides of the connector and pull straight out.
3. Slide the CRV straight out of the unit.

The mist eliminator can be seen through the opening in the back of the unit. The mist eliminator must be raised up and the bottom can be pulled toward the front of the unit and removed.

Q-TEC Energy Recovery Ventilator (Option)

Before starting, make sure that the power has been turned off. The return air grille panel must be removed. The energy recovery ventilator (QERV) can be seen after the panel has been removed. To gain access to the mist eliminator, the QERV must be removed.

1. The front fill plate of the QERV must be removed. There is one screw on either side of the plate. Remove these screws and remove the plate.
2. On either side of the QERV there are mounting screws that hold the QERV in place. Remove both of these screws.
3. Underneath the heat recovery cassette is a power connector for the lower blower assembly. To disconnect this plug, squeeze the tabs on both sides of the plug to release the plug. While squeezing the tabs, pull the plug out of the socket.
4. The QERV power plug is on the right side (unplug from filter partition) and the control plug is on the left (unplug from left side of voltage box in the control panel). Both of these plugs must be disconnected to remove the QERV. Squeeze the tabs on the sides of the connector and pull straight out.
5. Slide the QERV assembly straight out of the unit, being careful not to let the cassette slide out of the QERV.

The mist eliminator can be seen through the opening in the back of the unit. The mist eliminator must be raised up and the bottom can be pulled toward the front of the unit and removed.

Basic Installation Design and Application Planning

Successful unit installations require proper planning and site inspection before installation begins. Before installing the unit, make sure that all service and airflow clearances are met and that the unit can meet all applicable code and regulation requirements. Provide an inspection of both the inside and outside of the structure by reviewing floorplans and/or visiting the installation site.

Mounting the Unit

The unit is shipped with the compressor secured to the compressor rails with two (2) shipping brackets. Although the unit will perform as designed with the shipping brackets in place, there may be an increase in noise and vibration levels. Remove and discard the shipping brackets once unit is positioned at its final installation location (see Figure 12).

When installing a Q-TEC unit near an interior wall on the left side, a minimum of 8" is required but 12" is preferred.

When installing a Q-TEC unit near an interior wall on the right side, a minimum of 18" is required as additional space is needed to connect the side drain. If rear condensate drain kit QCDS48 is used, the minimum can be reduced to 8".

This clearance is required to allow for the attachment of the unit to the sleeve and side trim pieces to the wall.

This unit is to be secured to the wall sleeve with mounting brackets provided. The unit itself, the supply duct and the free blow plenum are suitable of “0” clearance to combustible material.

Following are the steps for mounting the Q-TEC. For reference see Figure 13A (page 12) for external mounting bracket or 13B (page 12) for internal bolt secured bracket (recommended).

1. Attach mounting brackets to the wall sleeve with screws provided. Either use external mounting bracket (Figure 13A) or internal bolt bracket (Figure 13B).
2. Position the unit in front of the sleeve with the condenser section toward the sleeve.
3. Remove the locking screws from the wheels (see Figure 14 on page 13).
4. Roll the unit into the sleeve. Make sure to check both sides of the unit as it is being rolled to keep it centered in the sleeve. Also check the alignment to the mounting brackets. This unit must be level from side to side. If adjustments are necessary, shim up under the rollers with sheets of steel or any substance that is not affected by moisture.
5. Make sure the gasket on the rear of the unit is touching the sleeve across the top and down both sides. This is a rain water seal.
6. Secure the mounting brackets to the unit with screws provided, #10 hex head sheet metal screws (Figure 13A) or use nut and washer to secure sleeve (Figure 13B).

FIGURE 12
Remove Compressor Shipping Brackets

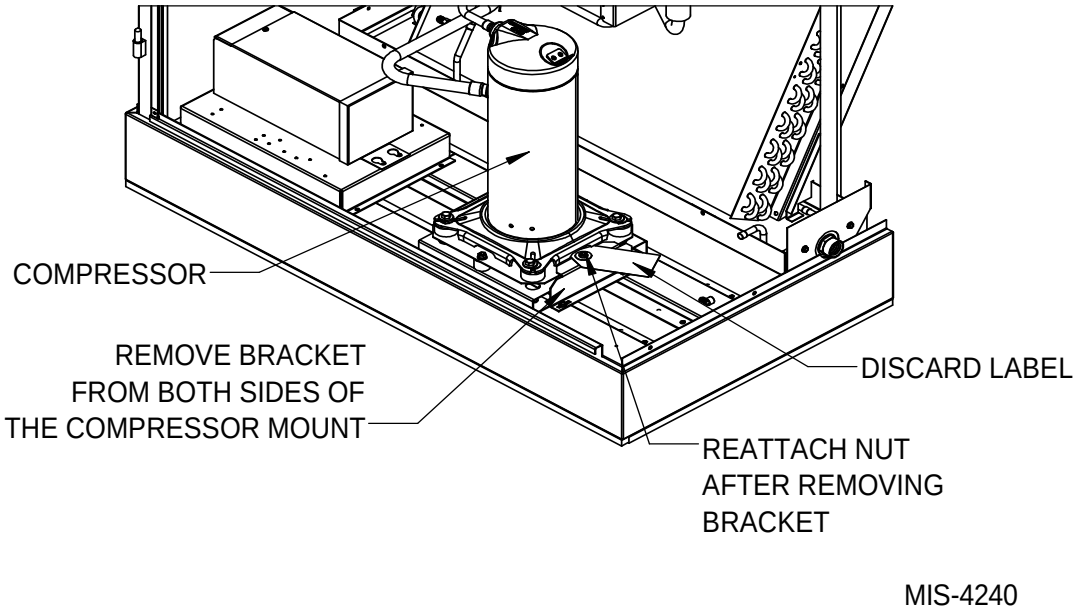

FIGURE 13A
Unit Mounting – Method 1

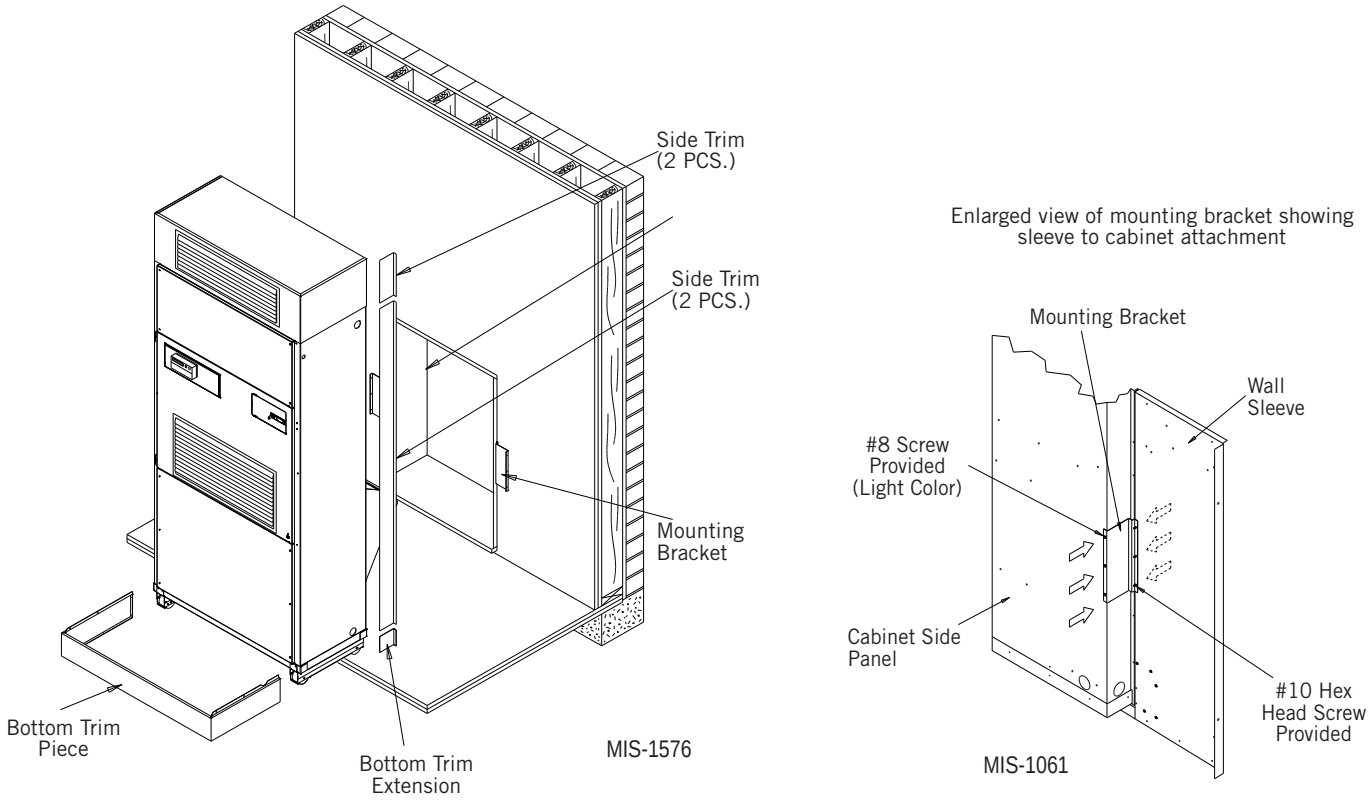

FIGURE 13B
Unit Mounting – Method 2

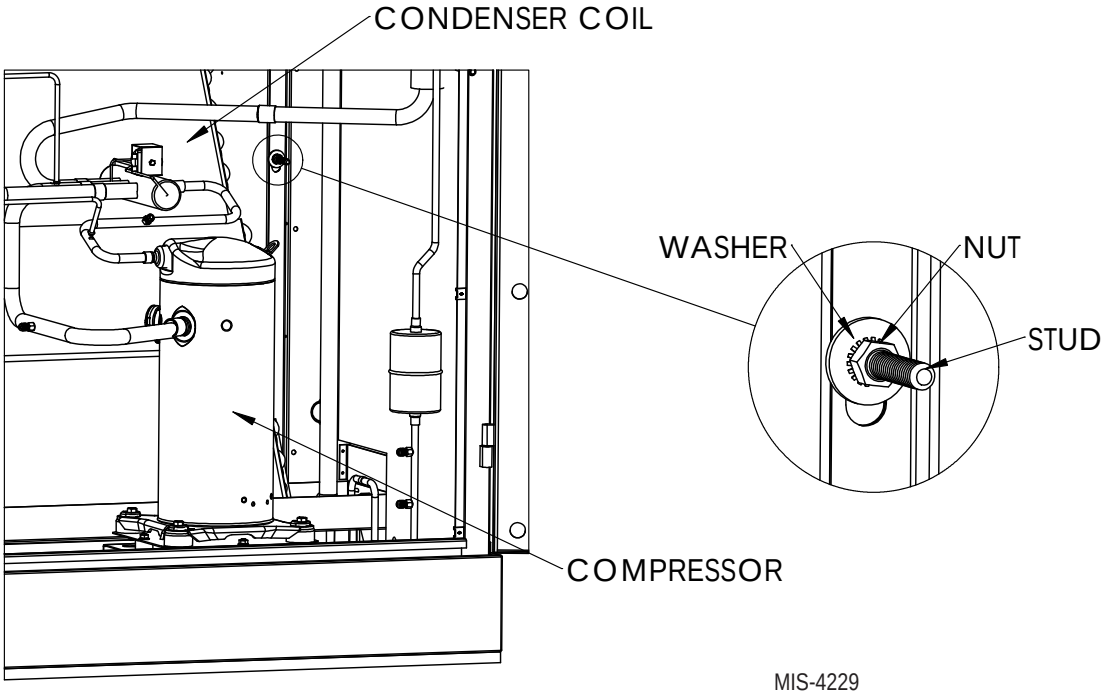

FIGURE 14
Remove Locking Screws from Wheels

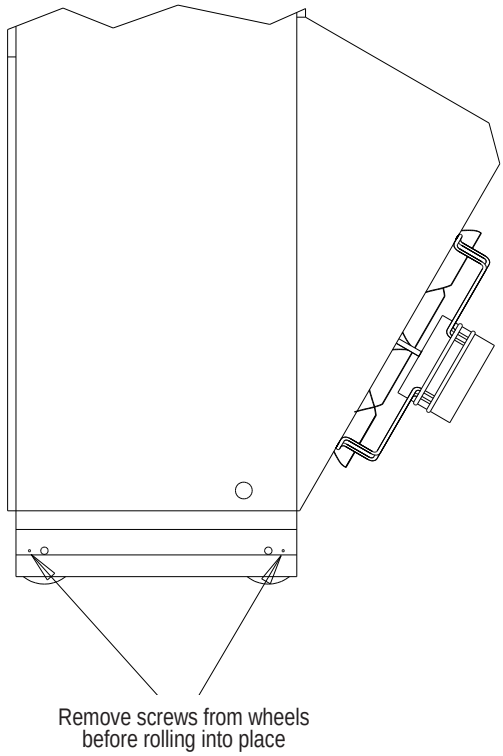

7. Bottom trim extensions are provided for use when wall is less than 14" but greater than 10.5". Secure to wall with screws (not provided).
8. Attach the bottom trim piece to the unit with the screws provided (dark colored).
9. Position side trim pieces to wall and attach with field-supplied screws. There are two long pieces and two short pieces supplied. The long pieces are to enclose the gap behind the unit. The short pieces are to fill the gap behind the cabinet extension or the free blow plenum box. They may be cut to suit ceiling height or overlap the unit side trim. There is sufficient length to trim up to a 10' 2" ceiling.

NOTE: *If the exterior wall thickness is between 5" and 10.5", a side trim extension piece kit, model QSTX42, is available.*

Condensate Drain

There are two drain connections on the unit. The rear drain is the primary drain, and is located on the right lower rear panel of the unit. The optional side drain is located on the bottom right side of the unit. The side drain is shipped with a plug installed.

The ***side drain*** requires a water trap for proper drainage (see Figure 15). The drain can be routed through the floor or through the wall. ***If the drain is to be routed through an unconditioned space, it must be protected from freezing***. The drain line must be able to be removed from the unit if it is necessary to remove the unit from the wall. When the side drain is used, the plug must be removed and installed in the rear drain outlet.

FIGURE 15
Optional Side Drain (Side View)

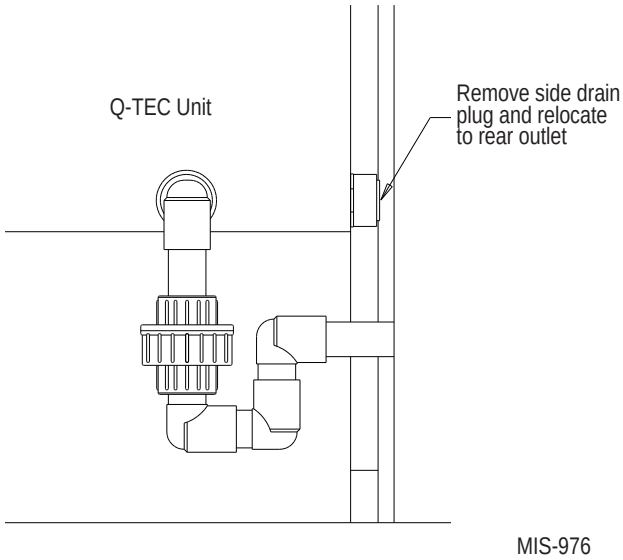

The ***rear drain*** can be used with wall thickness of up to 10" where a water trap can be installed between the unit and the interior wall (see Figure 16). The trap cannot extend beyond the edge of the unit or it will interfere with the wall mounting bracket. The drain can be routed through the floor or through the wall. If the drain is routed through the wall, the drain line must be positioned such that it will not interfere with the sleeve flange or the grille (see Figure 17 on page 14). ***If the drain is to be routed through an unconditioned space, it must be protected from freezing***.

FIGURE 16
Standard Rear Drain

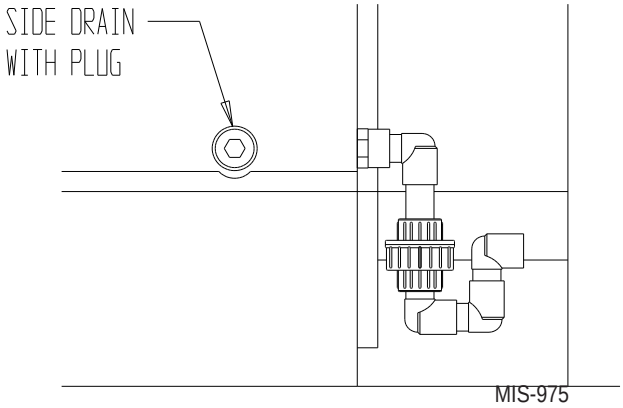

FIGURE 17
Rear Drain (Top View)

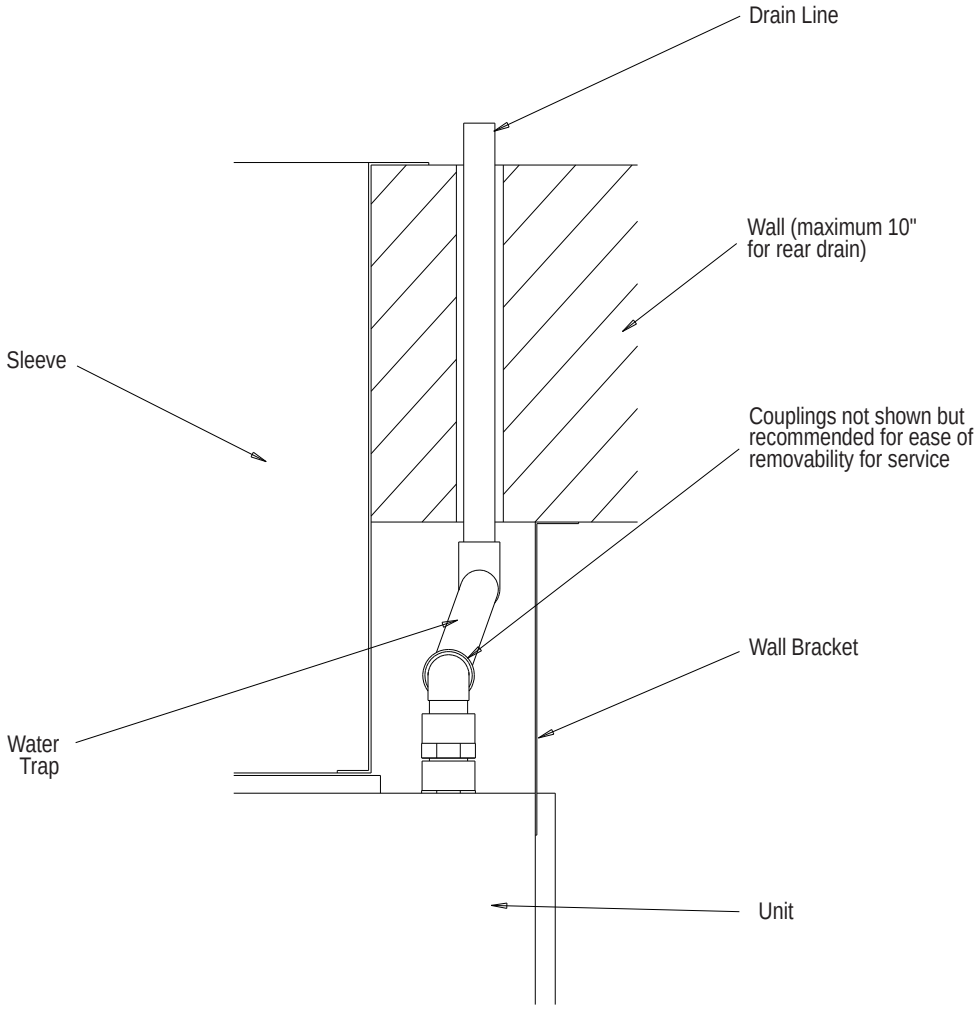

MIS-977

Optional Rear Drain Kits

Optional Rear Drain Kit Model QCDS48A is also available for these products. The optional rear drain kit offers multiple benefits that include the following:

- Allows unit to be rolled away from the sleeve without having to disconnect any hard plumbing connections.
- Allows indoor coil condensate to be easily connected to the rear drain box while bypassing the outdoor coil drain pan. This aids in minimizing the potential for biological growth to occur by minimizing the standing water and exposing it to warm temperatures.

See Figures 18A, 18B, 18C and 18D on pages 15-18.

The drain box permanently mounts onto the wall sleeve and is then either piped directly outdoors, or can be piped vertically. The Q-TEC unit is then equipped with fittings on the rear of the unit that slide into the drain box as it is wheeled towards the wall sleeve.

NOTE: *Models equipped with a refrigerant subcooler in the lower drain pan may experience a 2-3% decrease in cooling performance and efficiency when the indoor condensate is routed around the outdoor coil drain pan/subcooler assembly. Unit rated performance and efficiency are with the indoor condensate routed to the outdoor coil pan.*

There is also a heated version of the rear drain box available (Model #QCDS48H) for installation in northern climates where freezing may occur.

FIGURE 18A

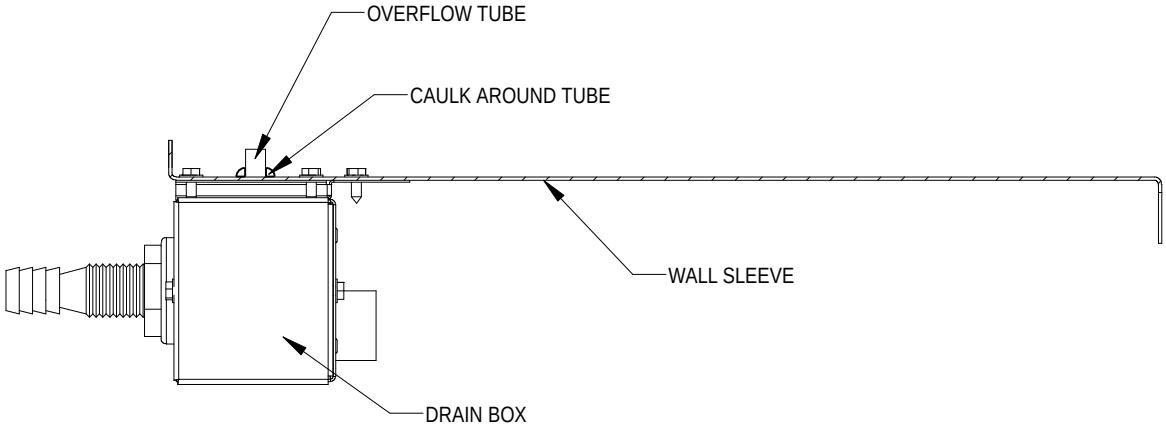

MIS-2469

FIGURE 18B

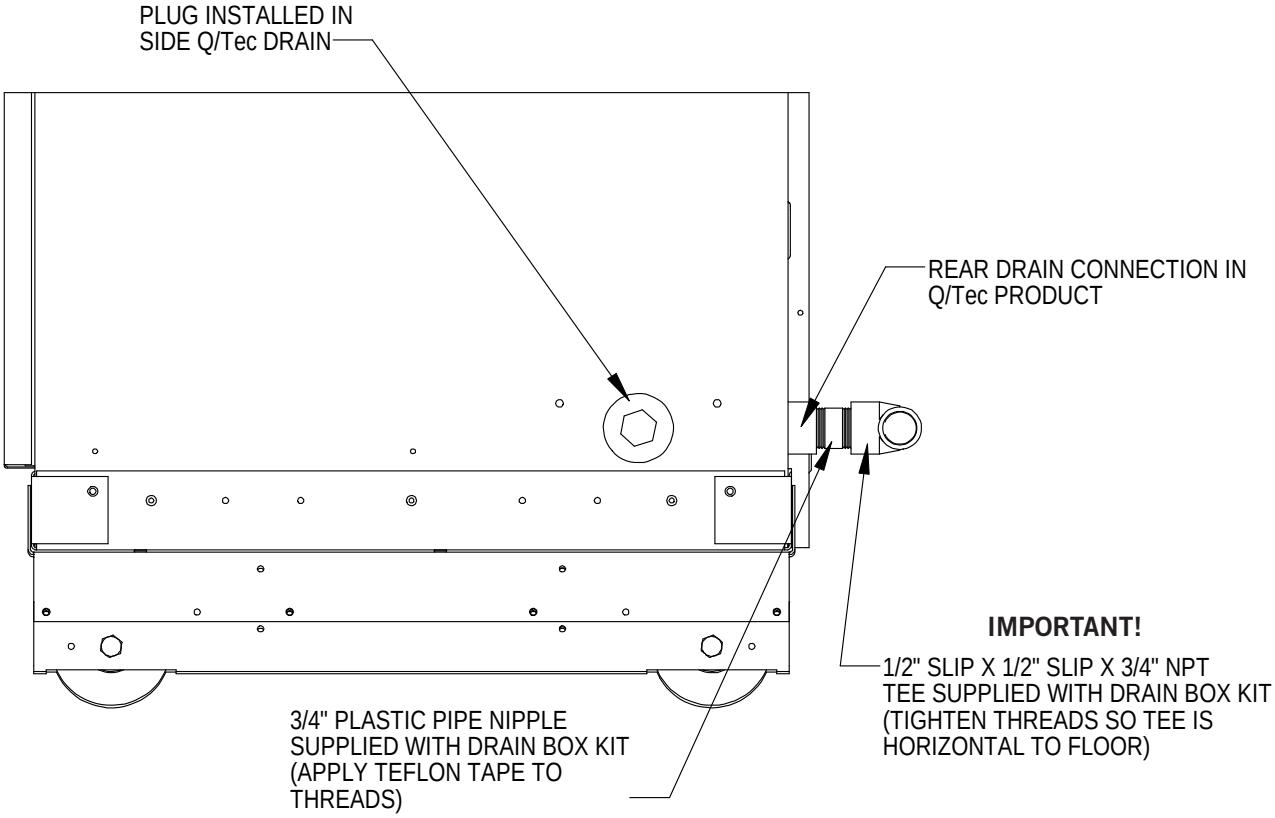

MIS-2470

FIGURE 18C

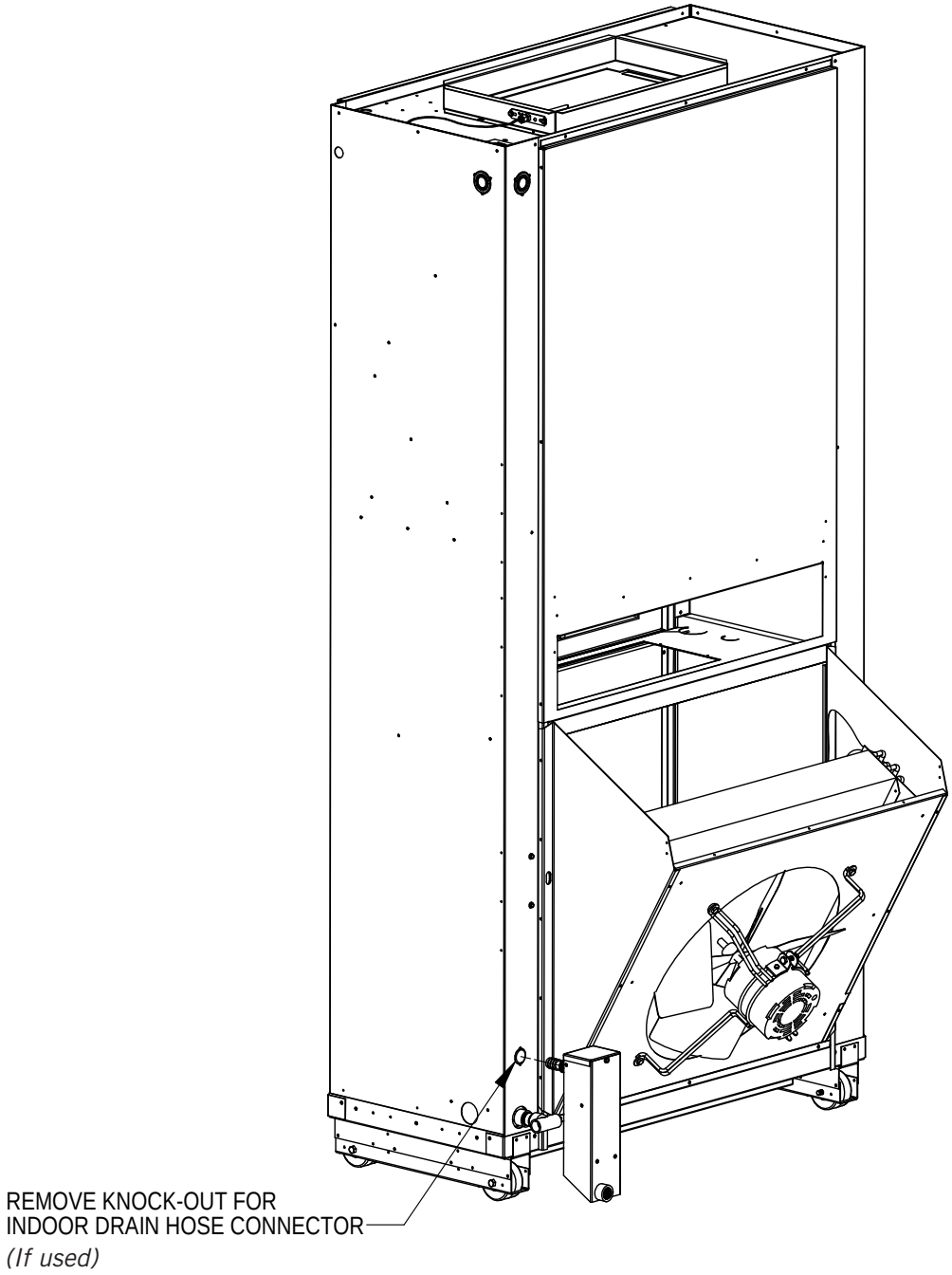

MIS-2471 A

FIGURE 18D

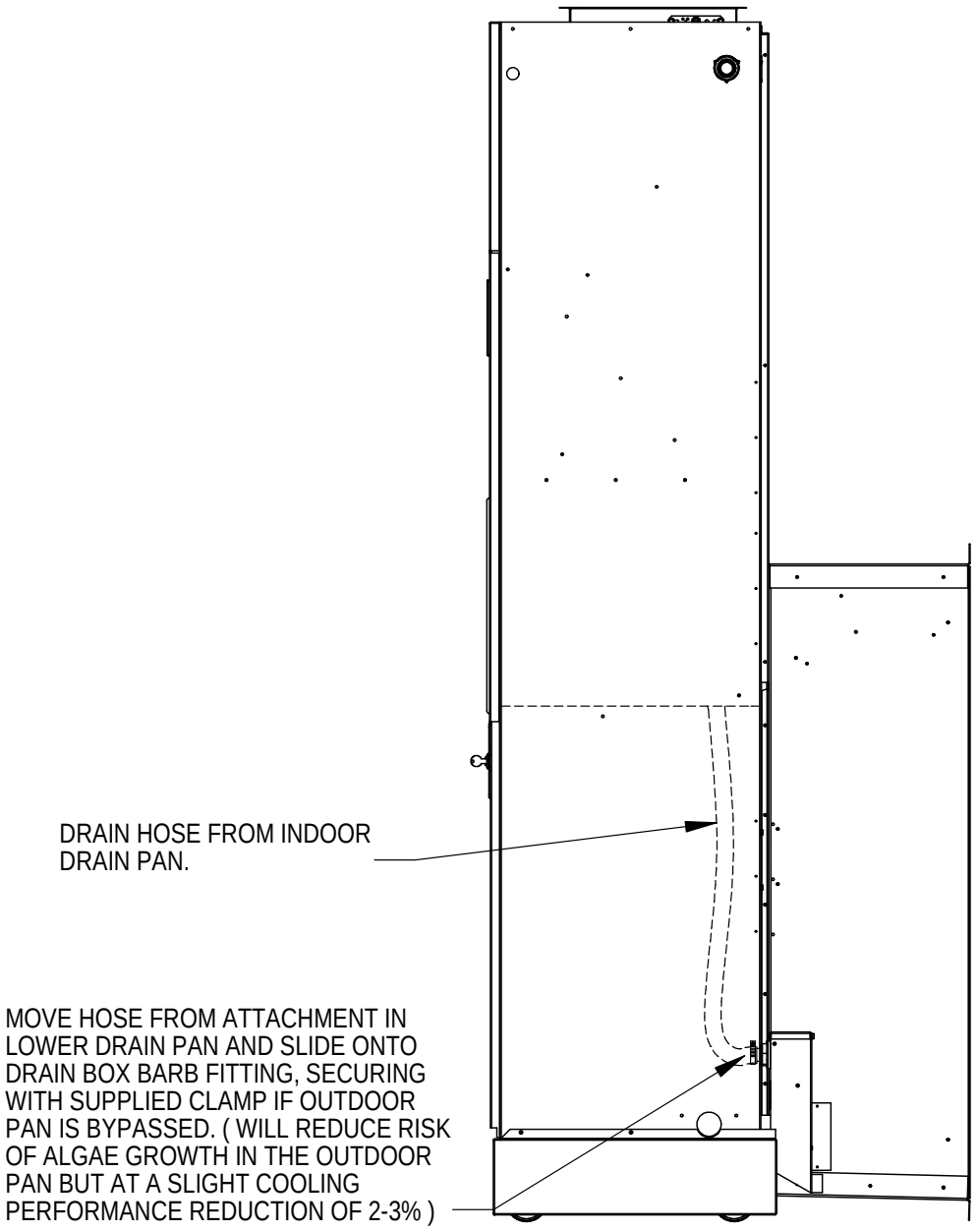

MIS-2472 A

Indoor Ducted and Non-Ducted Applications

Air distribution inside the structure being conditioned plays an important role in making sure the area is a consistent temperature. Improper air distribution can result in areas being cooler or warmer, electrical equipment not receiving sufficient airflow or occupancy discomfort felt inside an area. Thermostat or indoor temperature sensor placement inside the area being conditioned also plays an important role in indoor climate control.

Indoor Supply Airflow

Indoor installation areas must provide a non-restrictive path for the conditioned supply air to leave supply grilles and registers. Inspect the area to ensure that all indoor portions of the room or rooms will have access to supply air. Ductwork may be used to ensure proper air circulation and all provided ductwork guidelines and clearances must be followed. Non-ducted applications must use a supply box with supply grilles that installs on top of the unit. Be sure to adjust supply deflectors to properly disperse the conditioned supply air to all parts of the room. Avoid closing sections of the supply grilles which would cause unneeded supply duct pressurization.

Indoor Return Airflow

A non-restrictive path for room air returning to the center section of the unit must be provided inside the room. Avoid placing objects including furniture, electronics equipment, equipment racks and cabinets directly in front of the unit return grilles and registers. Bard recommends at least 2' between solid objects and return grilles or registers.

Ducted Applications

Field fabricated supply duct work may be installed inside the structure being conditioned. A short supply duct may be connected to the unit supply flanges before unit installation to help with duct connections inside the structure. Supply ducts must be properly sized for the design airflow requirement of the equipment. Air Conditioning Contractors of America (ACCA) is an excellent guide to proper sizing. All duct work or portions thereof not in the conditioned space should be properly insulated in order to conserve energy, reduce heat conductivity, and prevent condensation or moisture damage. Refer to Maximum External Static Pressure (ESP) of Operation table on page 42. Design the duct work according to methods given by the Air Conditioning Contractors of America (ACCA). When duct work is installed in unheated spaces, it should be insulated with a minimum of 1" of insulation. Use insulation with a vapor barrier on the outside of the insulation. Flexible joints should be used to connect the duct work to the equipment in order to keep the noise transmission to a minimum. Ducts through the walls must be insulated and all joints taped or sealed to prevent air or moisture from entering the wall cavity.

All model series require a 1/4" clearance to combustible material for the first 3' of duct attached to the outlet air frame is required.

⚠ WARNING

Fire hazard.

Maintain minimum 1/4" clearance between the supply air duct and combustible materials in the first 3' of ducting.

Failure to do so could result in fire causing damage, injury or death.

Free Blow Applications

Some installations may not require extensive supply duct work throughout the structure and are referred to as free blow applications. Follow all clearances including distances to combustible materials and all instructions provided in this manual. A non-restrictive metallic supply air grille with deflectors is required for free blow applications. Contact the local Bard distributor or visit www.bardhvac.com for ordering information.

A top supply box is required for non-ducted applications. The spacing between louvers on the grille shall not be larger than 5/8".

Thermostat or Indoor Temperature Sensor Placement

The location and installation of the thermostat or temperature sensor that monitors indoor temperature is very important regarding unit operation. Avoid placing the thermostat in an area exposed to direct sunlight or air from doorways leading outdoors. Use a piece of insulating material to close off conduit openings or holes in the wall surface for wire entry into the thermostat or temperature sensor. This will help avoid non-conditioned air from entering the thermostat and effecting temperature and/or humidity readings. As common practice, the thermostat or temperature sensor should measure the temperature of the air being returned to the unit, and not the conditioned air being supplied by the unit. Placing the thermostat or temperature sensor near a return air opening will normally result in optimal unit performance.

FIGURE 19
Unit Dimensions

	A	B (Width)	C (Plenum Supply)	D (Returns)	E (Trim Width)
Q24H4 Q30H4 Q36H4	5.000	42.000	30.000	(2) 17.000	43.000
Q43H4 Q48H4	3.000	48.000	40.000	(2) 20.000	49.000

All dimensions are in inches. Dimensional drawings are not to scale.

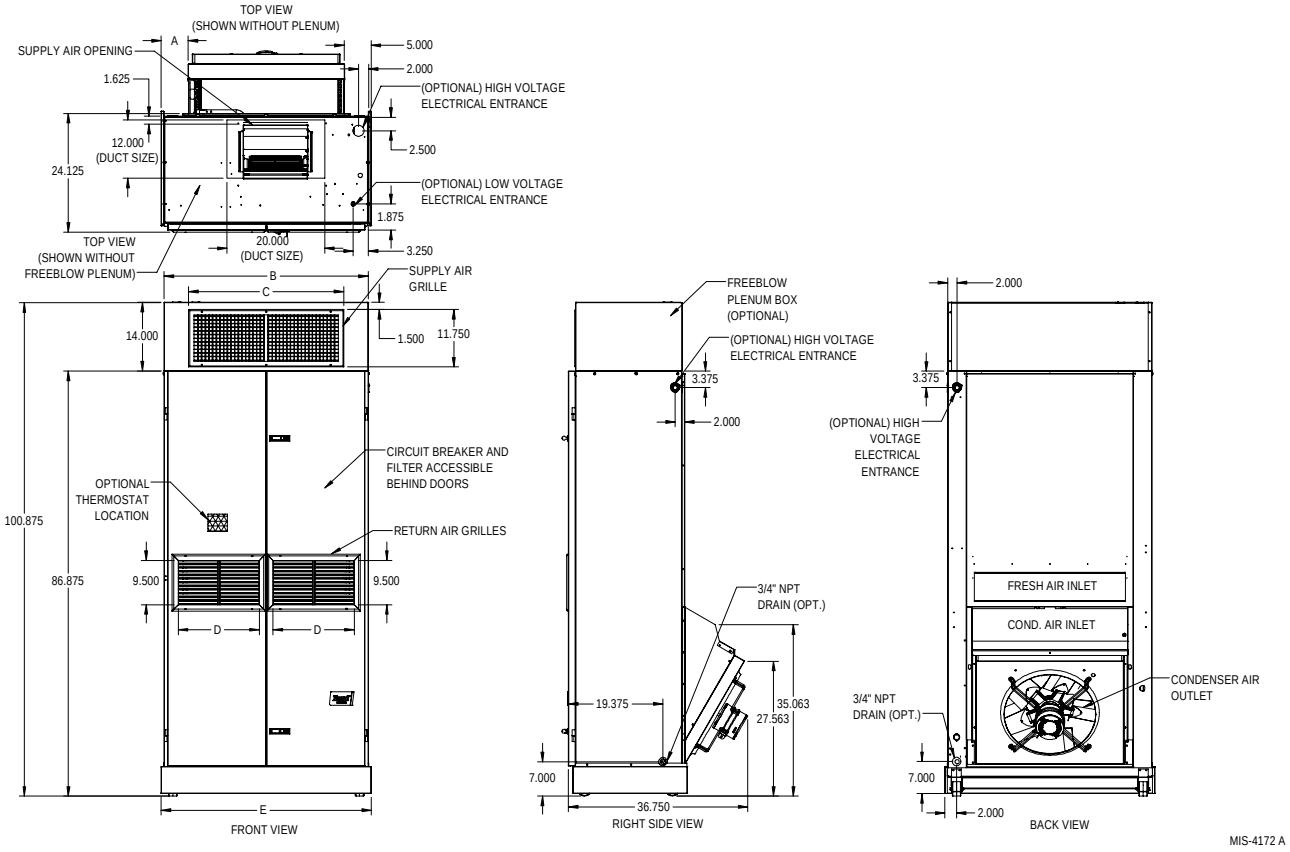

Wiring – Main Power

Main electrical power must be supplied to the unit from a clean, reliable power source. Verify voltage being supplied to the unit is consistent during all times of the day and within the range specified for the unit in the unit specifications and on the unit serial plate. Voltage must be measured at the field power connection point in the unit and while the unit is operating at full load (maximum amperage operating condition).

Refer to the unit serial plate and unit specifications for wire sizing information and maximum fuse or circuit breaker size. Each outdoor unit is marked with a "Minimum Circuit Ampacity". This means that the field wiring used must be sized to carry that amount of current. Depending on the installed KW of electric heat, there may be two field power circuits required. If this is the case, the unit serial plate will so indicate.

All models are suitable only for connection with copper wire. Each unit and/or wiring diagram will be marked "Use Copper Conductors Only". These instructions must be adhered to. Refer to the National Electrical Code (NEC) for complete current carrying capacity data on the various insulation grades of wiring material. All wiring must conform to NEC and all local codes.

The electrical data on the serial plate, in the unit specifications and also in Table 12 on page 41 list fuse and wire sizes (75°C copper) for all models including the most commonly used heater sizes. Also shown are the number of field power circuits required for the various models with heaters. The unit rating plate lists a "Maximum Time Delay Relay Fuse" or circuit breaker that is to be used with the equipment. The correct type and size must be used for proper circuit protection and also to ensure that there will be no nuisance tripping due to the momentary high starting current of the compressor motor.

Three phase models must have proper phasing. A phase monitor is included in all three phase models, and will indicate improper phasing during a call for cooling (24VAC at Y1 terminal). See provided information included in this document regarding the phase monitor.

High Voltage Connections

Field wires can enter the cabinet through either a top or side knock-out on the right. Both entrance points will utilize the wire channel to direct field wires to the control panel. Figure 20 shows the entrance points and wire routing.

FIGURE 20
High Voltage Connections

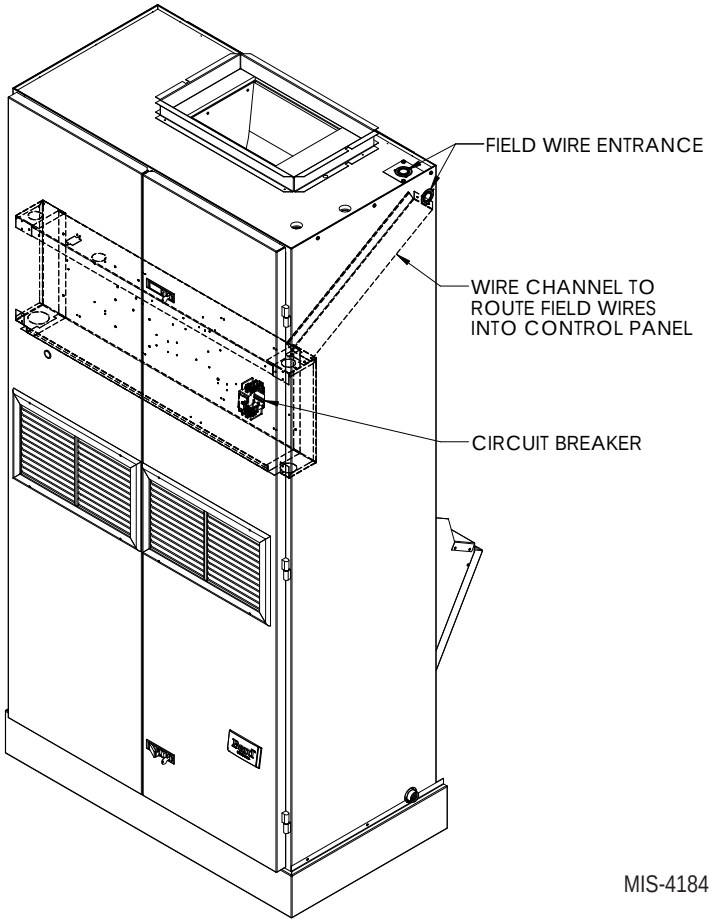

Wiring – Low Voltage

All 230/208V 1 phase and 3 phase equipment have dual primary voltage transformers. All equipment leaves the factory wired on 240V tap. For 208V operation, reconnect from 240V to 208V tap. The acceptable operating voltage range for the 240 and 208V taps are:

Tap: 240 Range: 253 – 216
Tap: 208 Range: 220 – 187

NOTE: *The voltage should be measured at the field power connection point in the unit and while the unit is operating at full load (maximum amperage operating condition).*

For low voltage wiring, an 18 gauge copper, color-coded cable is recommended. See Table 4 on page 23 for more information.

Low Voltage Connections

These units use a 24-volt AC low voltage circuit.

C terminal is the *24VAC common and is grounded.*

G terminal is the *indoor blower input*.

Y1 terminal is the *1st Stage input for cooling.*

Y2 terminal is the *2nd Stage compressor input for cooling* (if equipped with an economizer) or *Y2 disables Balanced Climate mode if the Y1-Y2 jumper is removed* (see page 28).

B/W1 terminal is the *reversing valve input*. The reversing valve must be energized for heating mode.

W2 terminal is the *1st stage electric heat* (if equipped).

W3 terminal is the *2nd stage of electric heat* or *emergency heat* (if equipped).

A terminal is the *ventilation input*. This terminal energizes any factory-installed ventilation option and indoor blower.

D terminal is the *dehumidification input*. If installed, this terminal energizes any factory-installed dehumidification option.

L terminal is *24 volt alarm active output*.

Unit Shutdown Feature (Standard on All Models)

The RT terminal is the 24VAC transformer output, and the R terminal is the 24VAC hot terminal for the operation of the equipment. RT and R are connected with a brass jumper bar which can be removed and RT and R connected to an external NC (normally closed) contact such as a fire/smoke detector that will cause shutdown of the equipment upon activation.

Balanced Climate™ Feature (Standard on All Models)

All units are equipped with the capability of running in Balanced Climate mode. This mode is designed to enhance the comfort level by reducing the indoor airflow amount and extending the run time to help extract more humidity during cooling operation. In heating mode, the reduced airflow provides a warmer supply air temperature creating more comfortable heat. The Y1 terminal is the 24VAC input for Balanced Climate compressor cooling operation. The Y2 terminal is the 24VAC input for compressor cooling standard operation. Y1 and Y2 are connected with a brass jumper bar which can be removed to enable Balanced Climate mode. The Q-TEC products come standard with two low voltage strips (one in the blower section and another in the control panel). Each low voltage strip will need the Y1-Y2 jumper removed for proper Balanced Climate operation. Units with an economizer will not have the brass jumper installed. Refer to vent manuals for instructions on how Balanced Climate works with each vent.

NOTE: *Units with mechanical dehumidification require an additional connection to be made when enabling Balanced Climate. Refer to the dehumidification supplemental instructions for this step.*

To operate in Balanced Climate mode, a 2-stage heat pump thermostat is required. The lower indoor airflow operation is overridden by utilizing a 2-stage thermostat. If the call for cooling is not satisfied within a given time frame or temperature differential (specified by the thermostat), the thermostat will send a signal to Y2 which then increases the blower speed back to the selected speed.

Refer to page 28 for additional Balanced Climate requirements and limitations.

Dehumidification Feature (Optional)

The D terminal is the 24VAC input for dehumidification operation on dehumidification hot gas reheat equipped units. When 24VAC is applied to the D terminal, a 3-way valve solenoid is energized. The reheat coil located behind the evaporator coil is then active to reheat the supply air during cooling mode. This allows humidity to be removed from the air entering the unit without a large amount of sensible cooling capacity. During dehumidification, the indoor blower speed is reduced to help with the humidity removal. A humidity sensing thermostat or humidistat is required to control dehumidification operation.

If there is a call for dehumidification and comfort cooling at the same time, the call for cooling takes precedence over dehumidification.

If there is a call for dehumidification and first stage heating, the call for dehumidification takes precedence over first stage heating. A second stage heating call will cancel dehumidification.

Ventilation Features (Optional)

See ventilation instructions provided with unit for low voltage wiring.

Low Ambient Control (LAC)

The low ambient control is a pressure switch that is attached to the liquid line of the system and monitors high side system pressure. Operation of the LAC occurs as outdoor temperatures drop below 60ºF. LAC operation cycles the condenser fan on/off based on outdoor temperature.

Outdoor Temperature Switch and Freeze Protection Thermostat

An outdoor temperature switch and an evaporator freeze protection thermostat is supplied with all units that have a low ambient control. The outdoor switch disables Balanced Climate mode (if enabled) when the temperature drops below 50ºF. This prevents potential evaporator coil freeze up issues. For units with mechanical dehumidification, this switch must remain disconnected when Balanced Climate mode is not being used. Refer to unit wiring diagram. The freeze thermostat cuts out compressor operation if the evaporator begins to freeze up.

TABLE 1
Wall Thermostats

Part Number	Predominate Features
8403-060 (1120-445)	3 stage Cool; 3 stage Heat; Electronic Programmable/Non-Programmable; HP or Conventional; Auto or Manual changeover; Dehumidification Output
CS9B-THOA	3 stage Cool, 3 stage Heat; Programmable/Non-Programmable; HP or Conventional; Auto or Manual Changeover; Humidity Sensor w/ dehumidification; Motion Sensor w/Intelligent Learning Control; BACnet-compatible
CS9B-THOCA	3 stage Cool, 3 stage Heat; Programmable/Non-Programmable; HP or Conventional; Auto or Manual Changeover; Humidity Sensor w/ dehumidification; CO_2 Sensor; Motion Sensor w/Intelligent Learning Control; BACnet-compatible
CS9BE-THOA	3 stage Cool, 3 stage Heat; Programmable/Non-Programmable; HP or Conventional; Auto or Manual Changeover; Humidity Sensor w/ dehumidification; Motion Sensor w/Intelligent Learning Control; BACnet-compatible; Ethernet-compatible
CS9BE-THOCA	3 stage Cool, 3 stage Heat; Programmable/Non-Programmable; HP or Conventional; Auto or Manual Changeover; Humidity Sensor w/dehumidification; CO_2 Sensor; Motion Sensor w/Intelligent Learning Control; BACnet-compatible; Ethernet-compatible
8403-095 (T4 Pro)	1 stage Cool, 2 stage Heat – Heat Pump; 1 stage Cool, 1 stage Heat – Conventional; Programmable/Non-Programmable Electronic; Auto or Manual changeover
8403-090 (T6 Pro)	2 stage Cool, 3 stage Heat – Heat Pump; 2 stage Cool, 2 stage Heat – Conventional; Programmable/Non-Programmable Electronic; Auto or Manual changeover
8403-091	1 stage Cool, 1 stage Heat; Non-Programmable; FEMA use
8403-092 (T6 Pro Wi-Fi)	2 stage Cool, 3 stage Heat – Heat Pump; 2 stage Cool, 2 stage Heat – Conventional; Programmable/Non-Programmable Electronic; Auto or Manual changeover; Wi-Fi

TABLE 2
Humidity Controls

Part Number	Predominate Features
8403-038 (H600A1014)	SPDT switching, pilot duty 50VA @ 24V; Humidity range 20-80% RH
8403-047 (H200-10-21-10)	Electronic dehumidistat SPST closes-on-rise; Humidity range 10-90% with adjustable stops

TABLE 3
CO_2 Controllers

Part Number	Predominate Features
8403-096	Normally Open SPST relay closes-on-rise 24V dual wave length sensor. Default setting 950ppm, adjustable to 0-2000ppm Default off setting 1000ppm, adjustable to 0-200 ppm can be calibrated

TABLE 4
Thermostat Wire Size

Transformer VA	FLA	Wire Gauge	Maximum Distance In Feet
55	2.3	18 gauge 16 gauge 14 gauge 12 gauge	60 100 160 250

FIGURE 21
Thermostat Connections

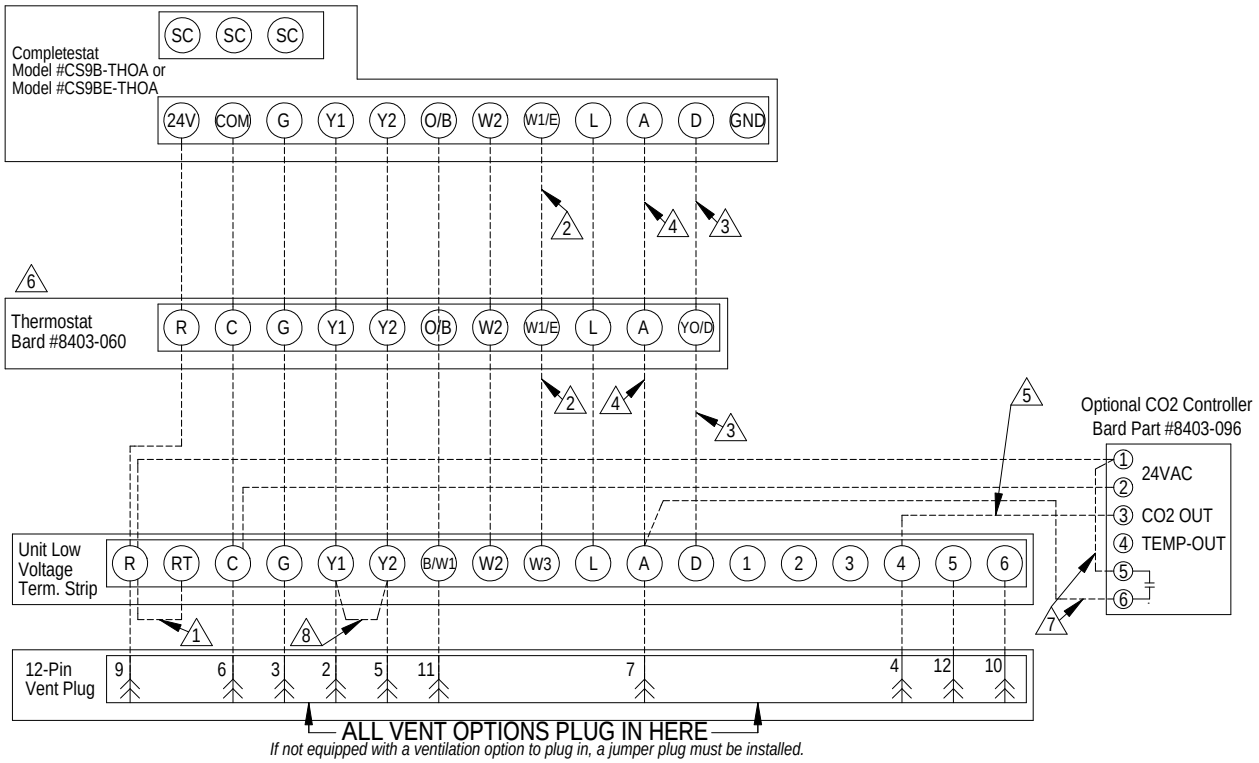

1. Factory installed jumper. Remove jumper and connect to N.C fire alarm circuit if emergency shutdown required.
2. Wire not needed below 15KW.
3. Wire required for dehumidification models only.
4. Do not connect "A" from thermostat if optional CO2 controller is used
5. 0-10 VDC modulating C02 control signal for modulating ventilation control (optional for ECON only - see vent instruction manuals)
6. Ensure model configuration is heat pump and not heat/cool. Must be configured to programmable and fan set to be programmed fan for the "A" output to function during scheduled occupied periods. Must be configured for multi-stage for Y1 output to be active 1st stage cooling. For dehumidification, must be configured for "No Economizer" for YO/D to be active for humidity control.
7. Do not add these wires if setting up for modulating control.
8. Factory installed jumper. Jumper is not installed on unit with economizers. Jumper is located in jade wiring harness.

MIS-4063 D

FIGURE 22
Thermostat Connections

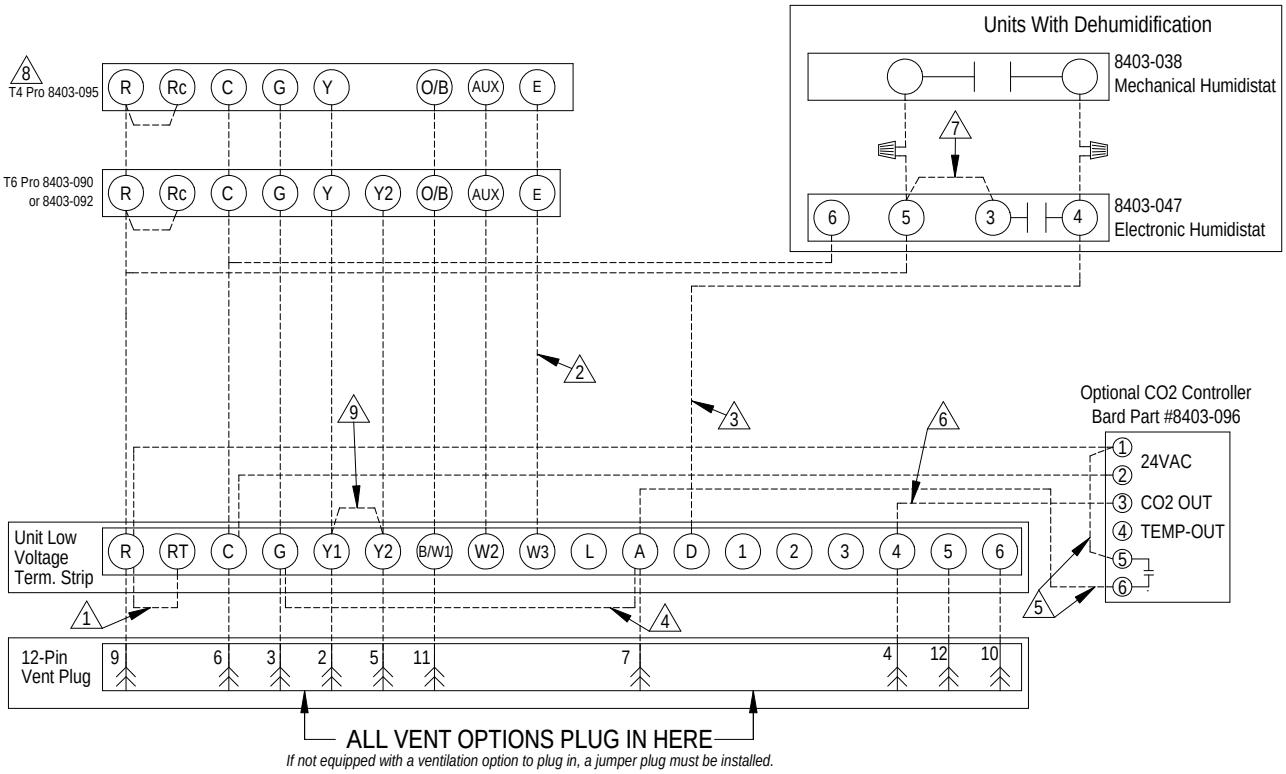

1. Factory installed jumper. Remove jumper and connect to N.C fire alarm circuit if emergency shutdown required.
2. Wire not needed below 15KW.
3. Wire required for dehumidification models only.
4. For vent operation, add jumper if optional CO2 controller is not used. Vent will run while blower is energized. For ECON & CRV-V, an additional wire change is required. See install manual
5. Do not add these wires if setting up for modulating control. See note 6.
6. 0-10 VDC Modulating CO2 control signal for modulating ventilation control (Optional for ECON Only) - See vent installation manual.
7. Jumper needs added.
8. Thermostat will not work with units equipped with economizers.
9. Factory installed jumper. Remove jumper to activate Balanced Climate™ Mode. A 2-stage thermostat is recommended for Balanced Climate mode.

MIS-4064 E

NOTICE

These units require R-410A refrigerant and polyol ester oil.

General

1. Use separate service equipment to avoid cross contamination of oil and refrigerants.
2. Use recovery equipment rated for R-410A refrigerant.
3. Use manifold gauges rated for R-410A (800 psi/250 psi low).
4. R-410A is a binary blend of HFC-32 and HFC-125.
5. R-410A is nearly azeotropic—similar to R-22 and R-12. Although nearly azeotropic, charge with liquid refrigerant.
6. R-410A operates at 40-70% higher pressure than R-22 and systems designed for R-22 cannot withstand this higher pressure.
7. R-410A has an ozone depletion potential of zero, but must be reclaimed due to its global warming potential.
8. R-410A compressors use polyol ester oil.
9. Polyol ester oil is hygroscopic; it will rapidly absorb moisture and strongly hold this moisture in the oil.
10. A liquid line dryer must be used—even a deep vacuum will not separate moisture from the oil.
11. Limit atmospheric exposure to 15 minutes.
12. If compressor removal is necessary, always plug compressor immediately after removal. Purge with small amount of nitrogen when inserting plugs.

Topping Off System Charge

If a leak has occurred in the system, Bard Manufacturing recommends reclaiming, evacuating (see criteria above) and charging to the nameplate charge. If done correctly, topping off the system charge can be done without problems.

With R-410A, there are no significant changes in the refrigerant composition during multiple leaks and recharges. R-410A refrigerant is close to being an azeotropic blend (it behaves like a pure compound or single component refrigerant). The remaining refrigerant charge, in the system, may be used after leaks have occurred and then "top-off" the charge by utilizing the pressure charts on the inner control panel cover as a guideline.

REMEMBER: *When adding R-410A refrigerant, it must come out of the charging cylinder/tank as a liquid to avoid any fractionation, and to ensure optimal system performance. Refer to instructions for the cylinder that is being utilized for proper method of liquid extraction.*

Safety Practices

1. Never mix R-410A with other refrigerants.
2. Use gloves and safety glasses. Polyol ester oils can be irritating to the skin, and liquid refrigerant will freeze the skin.
3. Never use air and R-410A to leak check; the mixture may become flammable.
4. Do not inhale R-410A—the vapor attacks the nervous system, creating dizziness, loss of coordination and slurred speech. Cardiac irregularities, unconsciousness and ultimate death can result from breathing this concentration.
5. Do not burn R-410A. This decomposition produces hazardous vapors. Evacuate the area if exposed.
6. Use only cylinders rated DOT4BA/4BW 400.
7. Never fill cylinders over 80% of total capacity.
8. Store cylinders in a cool area, out of direct sunlight.
9. Never heat cylinders above 125°F.
10. Never trap liquid R-410A in manifold sets, gauge lines or cylinders. R-410A expands significantly at warmer temperatures. Once a cylinder or line is full of liquid, any further rise in temperature will cause it to burst.

Important Installer Notes

For improved start up performance, wash the indoor coil with a dishwashing detergent.

Dehumidification Models

Exposure to high pressure refrigerant hazard.

Dehumidification models are equipped with an electronic expansion valve (EEV). In order to fully recover refrigerant or evacuate system during repairs, either use service tool P/N 2151-021 to manually open the EEV or be sure to recover and evacuate from all service ports: suction, liquid and discharge.

Failure to do so could result in eye injuries and/or refrigerant burns.

High and Low Pressure Switches

All Q**H4 series models are supplied with high and low pressure switches that reset automatically in response to system pressures. High pressure switch settings: Opens 650 +/– 15 PSI, closes 520 +/– 15 PSI. Low

pressure switch settings: Opens 14 +/– 4 PSI, closes 30 +/– 5 PSI. Refer to defrost control board for lockout information.

Three Phase Scroll Compresser Start Up Information

Scroll compressors, like several other types of compressors, will only compress in one rotational direction. Direction of rotation is not an issue with single phase compressors since they will always start and run in the proper direction.

However, three phase compressors will rotate in either direction depending upon phasing of the power. Since there is a 50-50 chance of connecting power in such a way as to cause rotation in the reverse direction, verification of proper rotation must be made. A phase rotation meter can be used to verify a clockwise phase is being supplied. Verification of proper rotation direction can also be made by observing that suction pressure drops and discharge pressure rises when the compressor is energized. Reverse rotation also results in an elevated sound level over that with correct rotation, as well as substantially reduced current draw compared to tabulated values.

Verification of ***proper rotation*** must be made at the time the equipment is put into service. If improper rotation is corrected at this time, there will be no negative impact on the durability of the compressor. However, reverse operation for over 1 hour may have a negative impact on the bearing due to oil pump out.

NOTE: *If compressor is allowed to run in reverse rotation for an extended period of time, the compressor's internal protector will trip.*

All three phase compressors are wired identically internally. As a result, once the correct phasing is determined for a specific system or installation, connecting properly phased power leads to the same Fusite terminal should maintain proper rotation direction.

The direction of rotation of the compressor may be changed by reversing any two line connections to the unit.

Phase Monitor

All units with three phase scroll compressors are equipped with a three phase line monitor to prevent compressor damage due to phase reversal.

The phase monitor in this unit is equipped with two LEDs. If the Y signal (call for cooling) is present at the phase monitor and phases are correct, the green LED will light.

NOTE: *The phase monitor will not show phase reversal until the compressor is energized during a call for cooling or heat pump operation.*

If phases are reversed, the red fault LED will be lit and compressor operation is inhibited. The phase monitor will also inhibit operation for an imbalance exceeding 12% at 208 VAC and 8% at 460 VAC.

If a fault condition occurs, reverse two of the supply leads to the unit. ***Do not reverse any of the unit factory wires as damage may occur.***

Condenser Fan Operation

NOTE: *Certain models may be equipped with a low ambient control (LAC), and if so, the condenser fan motor will have a delayed start until system refrigerant operating pressure builds up. After starting, the fan motor may or may not cycle depending upon ambient conditions. This is normal operation.*

Service Hints

1. Caution owner/operator to maintain clean air filters at all times and also not to needlessly close off supply and return air registers. This reduces airflow through the system, which shortens equipment service life as well as increasing operating costs.
2. Check all power fuses or circuit breakers to be sure they are the correct rating.
3. Periodic cleaning of the outdoor coil to permit full and unrestricted airflow circulation is essential.

Sequence of Operation

Cooling

With Y1-Y2 jumpers installed, circuit R-Y1 makes at thermostat pulling in compressor contactor, starting the compressor, indoor blower (rated air) and outdoor motor. (See ***NOTE*** under **Condenser Fan Operation** concerning models equipped with low ambient control.) The G (indoor motor) circuit is automatically completed by the thermostat on any call for cooling operation or can be energized by manual fan switch on subbase for constant air circulation.

Heating

A 24V solenoid coil on reversing valve controls heating cycle operation. Two thermostat options, one allowing "Auto" changeover from cycle to cycle and the other constantly energizing solenoid coil during heating season—thus eliminating pressure equalization noise except during defrost, are to be used.

On "Auto" option, a circuit is completed from R-B/W1 and R-Y1 on each heating "on" cycle, energizing reversing valve solenoid and pulling in compressor contactor, starting compressor and outdoor motor. R-G also make starting indoor blower motor. Heat pump heating cycle now in operation.

The second option has no "Auto" changeover position, but instead energizes the reversing valve solenoid constantly whenever the system switch on subbase is placed in

"Heat" position, the "B" terminal being constantly energized from R. A thermostat demand for heat completes R-Y1 circuit, pulling in compressor contactor starting compressor and outdoor motor. R-G also make starting indoor blower motor.

On a call for 2nd stage heating, circuit R-W2 makes at the thermostat pulling in the heat contactor for the strip heat and blower operation. On a call for third stage heat, R-B/W1 breaks, dropping out heat pump, and R-W3 makes, bringing on second heat contactor, if so equipped.

Balanced Climate™ Mode

Balanced Climate™ is a great comfort feature that can easily be applied under any normal circumstances. If the Bard air conditioning system is being set up in a typical environment where 72°F is the lowest cooling setpoint, remove the Y1/Y2 jumpers from the upper and lower low voltage strips and install a 2-stage cooling thermostat. This will increase the humidity removal up to 35% and provide a much more comfortable environment. This mode will also increase the supply temperature when in heating mode. When Balanced Climate mode is activated, it is employed in both heating and cooling modes.

If the application is likely to require air conditioning operation below 60°F outdoor conditions, a low ambient control (LAC) kit must be installed. The LAC kit is equipped with an outdoor temperature switch that disables Balanced Climate mode when the outdoor temperature drops below 50°F. This prevents potential evaporator coil freeze up issues. The LAC kit also comes with an evaporator freeze protection thermostat that cuts out the compressor if the evaporator begins to freeze up.

Balanced Climate can readily be applied to duct-free (supply and return air grille) applications. It may also be applied to ducted applications with **limited static of 0.20" ESP (total including both supply and return statics)**. Consult Bard Application Engineering for details prior to implementation.

CAUTION: *Balanced Climate is not a replacement for a dehumidification (hot gas reheat) unit for extreme applications, but rather an enhancement feature for limited climates and applications.*

Defrost Cycle

The defrost cycle is controlled by temperature and time on the solid state heat pump control.

When the outdoor temperature is in the lower 40°F temperature range or colder, the outdoor coil temperature is 32°F or below. This coil temperature is sensed by the coil temperature sensor mounted near the bottom of the outdoor coil. Once coil temperature reaches 30°F or below, the coil temperature sensor sends a signal to the control logic of the heat pump control and the defrost timer will start accumulating run time.

After 30, 60 or 90 minutes of heat pump operation at 30°F or below, the heat pump control will place the system in the defrost mode.

During the defrost mode, the refrigerant cycle switches back to the cooling cycle, the outdoor motor stops, electric heaters are energized and hot gas passing through the outdoor coil melts any accumulated frost. When the temperature rises to approximately 57°F, the coil temperature sensor will send a signal to the heat pump control which will return the system to heating operations automatically.

If some abnormal or temporary condition such as a high wind causes the heat pump to have a prolonged defrost cycle, the heat pump control will restore the system to heating operation automatically after 8 minutes.

The heat pump defrost control board has an option of 30-, 60- or 90-minute setting. By default, this unit is shipped from the factory with the defrost time on the 30-minute pin. If circumstances require a change to another time, remove the jumper pin from the 30-minute terminal and reconnect to the desired terminal (see Figure 23).

There is a cycle speed up jumper on the control. This can be used for testing purposes to reduce the time between defrost cycle operation without waiting for time to elapse.

Use a small screwdriver or other metallic object, or another 1/4" QC, to short between the *SPEEDUP* terminals to accelerate the HPC timer and initiate defrost.

Be careful not to touch any other terminals with the instrument used to short the *SPEEDUP* terminals. It may take up to 10 seconds with the *SPEEDUP* terminals shorted for the speedup to be completed and the defrost cycle to start.

As soon as the defrost cycle kicks in, remove the shorting instrument from the SPEEDUP terminals. Otherwise the timing will remain accelerated and run through the 1-minute minimum defrost length sequence in a matter of seconds and will automatically terminate the defrost sequence.

There is an initiate defrost jumper (sen jump) on the control that can be used at any outdoor ambient during the heating cycle to simulate a 0°F coil temperature.

This can be used to check defrost operation of the unit without waiting for the outdoor ambient to fall into the defrost region.

By placing a jumper across the *SEN JMP* terminals (a 1/4" QC terminal works best) the defrost sensor mounted on the outdoor coil is shunted out and will activate

the timing circuit. This permits the defrost cycle to be checked out in warmer weather conditions without the outdoor temperature having to fall into the defrost region.

In order to terminate the defrost test, the *SEN JMP* jumper must be removed. If left in place too long, the compressor could stop due to the high pressure control opening because of high pressure condition created by operating in the cooling mode with outdoor fan off. Pressure will rise fairly fast as there is likely no actual frost on the outdoor coil in this artificial test condition.

There is also a 5-minute compressor time delay function built into the defrost control board. This is to protect the compressor from short cycling conditions. The board's LED will have a fast blink rate when in the compressor time delay. In some instances, it is helpful to the service technician to override or speed up this timing period and shorting out the *SPEEDUP* terminals for a few seconds can do this.

FIGURE 23
Defrost Control Board

SW 1	SW 2	TIME (SEC)
OFF	OFF	30
ON	OFF	60
OFF	ON	120*
ON	ON	180

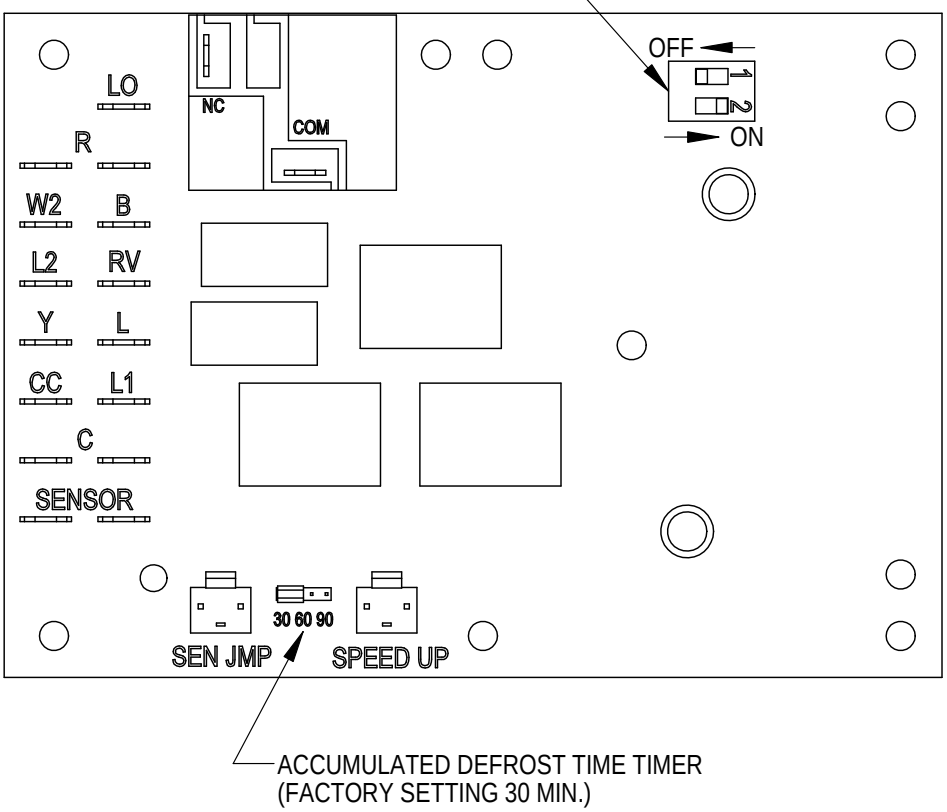

MIS-4228

Model	Setting
Q24H4	30
Q30H4	30
Q36H4	30
Q43H4	30
Q48H4	30

Low Pressure Switch Bypass Operation

The control has a selectable (SW1) low pressure switch bypass set up to ignore the low pressure switch input during the first (30, 60, 120 or 180 seconds) of “Y” operation.

After this period expires, the control will then monitor the low pressure switch input normally to make sure that the switch is closed during “Y” operation.

High Pressure Switch Operation

The control has a built-in lockout system that allows the unit to have the high pressure switch trip up to two times in 1 hour during same compressor call and only encounter a “soft” lockout. A “soft” lockout shuts the compressor off and waits for the pressure switch to reset, which at that point then allows the compressor to be restarted as long as the 5-minute short cycle timer has run out. If the high pressure switch trips a third time within 1 hour, the unit is in “hard” lockout indicating something is certainly wrong and it will not restart itself.

Vent Connection Plug

All units are equipped with a vent connection plug in the side of the low voltage box inside the control panel on the left side for the different ventilation packages to plug in to. If the compressor will not start and there is no "Y1" at the compressor control module, first check to make sure that either the optional vent is plugged into the vent connection plug or the supplied jumper plug is in place. **The unit will not operate without anything plugged in.** This plug is located in the side of the low voltage box inside the control panel on the left side behind the inner control panel cover. If the unit is supplied with a factory-installed vent package, it will be plugged in but the jumper plug will also be tethered next to the connection for troubleshooting purposes, if necessary.

Pressure Service Ports

High and low pressure service ports are installed on all units so that the system operating pressures can be observed. Pressure tables covering all models can be found on pages 39 and 40. It is imperative to match the correct pressure table to the unit by model number.

This unit employs high-flow Coremax valves instead of the typical Shrader type valves.

WARNING! Do NOT use a Schrader valve core removal tool with these valves. Use of such a tool could result in eye injuries or refrigerant burns!

To change a Coremax valve without first removing the refrigerant, a special tool is required which can be obtained at www.fastestinc.com/en/SCCA07H. See the replacement parts manual for replacement core part numbers.

Solid State Heat Pump Control Troubleshooting Procedure

1. ***NOTE:*** *A thorough understanding of the defrost cycle sequence is essential. Review that section (page 28) prior to troubleshooting the control.* Turn on AC power supply to unit.
2. Turn thermostat blower switch to "fan on"— the indoor blower should start. (If it doesn't, troubleshoot indoor unit and correct problem.)
3. Turn thermostat blower to "auto" position. Indoor blower should stop. ***NOTE:*** *Many models have a 1-minute blower time delay on "off" command; wait for this to time out.*
4. Set system switch to "heat" or "cool". Adjust thermostat to call for heat or cool. The indoor blower, compressor and outdoor fan should start.

NOTE: *If there was no power to 24 volt transformer, the compressor and outdoor fan motor will not start for 5 minutes. This is because of the compressor short cycle protection.*

LED BLINK CODES	
BLINK	**FUNCTION**
Slow	Normal function (1.0 sec on/1.0 sec off)
Fast	Compressor Delay timer active (0.1 sec on/0.1 sec off)
1	Low pressure switch failure
2	High pressure switch failure/"Soft" Lockout
3	Defrost mode active
4	High pressure switch failure/"Hard" Lockout

TABLE 5 – Troubleshooting

Sympton	Description, Check and Possible Causes	What & How to Check / Repair
Compressor will not start (heating or cooling)	**1. Check for LED illumination.** Is there an LED illuminated on the board (flashing)?	Yes = go to Step #2; No = go to Step #3
	2. Check for error codes. Is the LED flashing a Code?	Yes = go to Step #4; No = go to Step #8
	3. Check for power at board. Is there 24 volts AC between R and C?	Yes = go to Step #13; No = go to Step #9
	4. Check codes. What code is blinking?	Code "1", go to Step #6; Code "2", go to Step#7; Fast Blink, go to Step #5
	5. Compressor delay active. Wait for 5 minute delay or jump board's "speed up pins".	Check for proper operation; if still needed, go back to Step #1.
	6. Low pressure fault.	Check wiring circuit and unit pressures.
	7. High pressure fault.	Check wiring circuit and unit pressures.
	8. Check for Compressor input signal. Is there 24 volts AC between Y and C?	Yes = go to Step #10; No = go to Step #11
	9. No power to board.	The unit either does not have unit voltage, the transformer is bad or the unit wiring is incorrect.
	10. Check for Compressor output signal. Is there 24 volts AC between CC & C?	Yes = go to Step #12; No = go to Step #13
	11. No "Y" compressor input signal.	Check thermostat wiring, incorrect phase of unit (see section on Phase Monitor), and finally unit wiring.
	12. No "CC" compressor output signal.	Check compressor contactor for proper operation and finally check compressor.
	13. Faulty board.	Replace defrost board.
Fan outdoor motor does not run (cooling or heating except during defrost)	Heat pump control defective	Check across fan relay on heat pump control. (Com-NC) Replace heat pump control.
	Motor defective	Check for open or shorted motor winding. Replace motor.
	Motor capacitor defective	Check capacitor rating. Check for open or shorted capacitor. Replace capacitor.
Reversing valve does not energize (heating only)	Heat pump control defective	Check for 24V between RV-C and B-C. 1. Check control circuit wiring. 2. Replace heat pump control.
	Reversing valve solenoid coil defective	Check for open or shorted coil. Replace solenoid coil.
Unit will not go into defrost (heating only)	Temperature sensor or heat pump control defective	Disconnect temperature sensor from board and jumper across "SPEEDUP" terminals and "SEN JMP" terminals. This should cause the unit to go through a defrost cycle within one minute. 1. If unit goes through defrost cycle, replace temperature sensor. 2. If unit does not go through defrost cycle, replace heat pump control.
Unit will not come out of defrost (heating only)	Temperature sensor or heat pump control defective	Jumper across "SPEEDUP" terminal. This should cause the unit to come out of defrost within one minute. 1. If unit comes out of defrost cycle, replace temperature sensor. 2. If unit does not come out of defrost cycle, replace heat pump control.

Checking Temperature Sensor Outside Unit Circuit

1. Disconnect temperature sensor from board and from outdoor coil.
2. Use an ohmmeter to measure the resistance of the sensor. Also use ohmmeter to check for short or open.
3. Check resistance reading to chart of resistance. Use sensor ambient temperature. (Tolerance of part is ± 10%.)
4. If sensor resistance reads very low, sensor is shorted and will not allow proper operation of the heat pump control.
5. If sensor is out of tolerance, shorted, open or reads very low ohms, it should be replaced.

TABLE 6
Temperature F vs. Resistance R of Temperature Sensor

F	R	F	R	F	R	F	R
-25.0	196871	13.0	56985	53.0	19374	89.0	7507
-24.0	190099	14.0	55284	52.0	18867	90.0	7334
-23.0	183585	15.0	53640	53.0	18375	91.0	7165
-22.0	177318	16.0	52051	54.0	17989	92.0	7000
-21.0	171289	17.0	50514	55.0	17434	93.0	6840
-20.0	165487	18.0	49028	56.0	16984	94.0	6683
-19.0	159904	19.0	47590	57.0	16547	95.0	6531
-18.0	154529	20.0	46200	58.0	16122	96.0	6383
-17.0	149355	21.0	44855	59.0	15710	97.0	6239
-16.0	144374	22.0	43554	60.0	15310	98.0	6098
-15.0	139576	23.0	42295	61.0	14921	99.0	5961
-14.0	134956	24.0	41077	62.0	14544	100.0	5827
-13.0	130506	25.0	39898	63.0	14177	101.0	5697
-12.0	126219	26.0	38757	64.0	13820	102.0	5570
-11.0	122089	27.0	37652	65.0	13474	103.0	5446
-10.0	118108	28.0	36583	66.0	13137	104.0	5326
-9.0	114272	29.0	35548	67.0	12810	105.0	5208
-8.0	110575	30.0	34545	68.0	12492	106.0	5094
-7.0	107010	31.0	33574	69.0	12183	107.0	4982
-6.0	103574	32.0	32634	70.0	11883	108.0	4873
-5.0	100260	33.0	31723	71.0	11591	109.0	4767
-4.0	97064	34.0	30840	72.0	11307	110.0	4663
-3.0	93981	35.0	29986	73.0	11031	111.0	4562
-2.0	91008	36.0	29157	74.0	10762	112.0	4464
-1.0	88139	37.0	28355	75.0	10501	113.0	4367
0.0	85371	38.0	27577	76.0	10247	114.0	4274
1.0	82699	39.0	26823	77.0	10000	115.0	4182
2.0	80121	40.0	26092	78.0	9760	116.0	4093
3.0	77632	41.0	25383	79.0	9526	117.0	4006
4.0	75230	42.0	24696	80.0	9299	118.0	3921
5.0	72910	43.0	24030	81.0	9077	119.0	3838
6.0	70670	44.0	23384	82.0	8862	120.0	3757
7.0	68507	45.0	22758	83.0	8653	121.0	3678
8.0	66418	46.0	22150	84.0	8449	122.0	3601
9.0	64399	47.0	21561	85.0	8250	123.0	3526
10.0	62449	48.0	20989	86.0	8057	124.0	3452
11.0	60565	49.0	20435	87.0	7869		
12.0	58745	50.0	19896	88.0	7686		

Troubleshooting ECM™ 142R Outdoor Fan Motors

WARNING

- EXPOSED MOVING PARTS.
- DISCONNECT ALL ELECTRICAL POWER BEFORE SERVICING.
- FAILURE TO DO SO CAN RESULT IN SEVERE INJURY OR AMPUTATION.

WARNING

- HAZARD OF ELECTRICAL SHOCK.
- ELECTRICAL SHOCK CAN RESULT IN SERIOUS INJURY OR DEATH.
- DISCONNECT THE REMOTE ELECTRIC POWER SUPPLY OR SUPPLIES BEFORE SERVICING.

7961-755-1

CAUTION

Do not operate motor without fan blade attached. Such operations will cause the motor to oscillate up and down.

CAUTION

Only use the correct replacement motor from the manufacturer that is a direct replacement for the failed motor.

USING THE WRONG MOTOR VOIDS ALL WARRANTIES AND MAY PRODUCE UNEXPECTED RESULTS.

1. In normal operation, this motor may rock back and forth on start up. Do not replace if this is the only symptom identified.
2. If the system is operating properly, but the motor appears to run slower than it should, the motor is good. High efficiency systems with optimized fan blades are engineered to run slow to decrease noise. The Bard Q-TEC Series models also adjust fan speed based upon varied outdoor ambient conditions to optimize sound and unit efficiency.
3. If the system is noisy, freezing up, running a high head pressure, tripping the high pressure switch or compressor overload, check the following:
   a. Ensure cleanliness of condenser coil(s) and fan blade/shroud.
   b. Confirm the fan blade is not bent or deformed, isn't rubbing on the shroud and that it is tight on the motor shaft. Also ensure the motor is secure in its mounting system, and the mounting system is secure to the unit.
   c. The Bard Q-TEC is equipped with a low ambient control pressure switch. This pressure switch completes the 24VAC common feed to the outdoor fan motor control in cooling mode. If this switch is defective, the outdoor air temperature is too cold to raise the head pressure to the 325# switch closing set point or the system charge is too low, this could be the cause of the issue. (In heat pump {heating} mode, the low ambient fan cycling control is bypassed.)
   d. If motor is not running, go to next section.
4. If the motor does not appear to be running at the proper speed or does not shut off, refer to the next section for voltage checks to determine if the motor is getting the proper input signals.

   If the motor IS NOT receiving any communication, troubleshoot the communication issue using the diagnostic table for the fan logic control.

   a. Power is connected with a 5-pin plug:

      Pin #4 red wire connects to L1

      Pin #5 black wire connects to L2

      Pin #3 green wire connects to ground

   b. This motor uses a 16-pin plug to control motor speed in constant CFM operation:

      Pins #1 & 3 black/white wire connects to COM

      Pin #6 yellow/white wire connects to pin #8 on vent plug

      Pin #9 blue wire connects to B on defrost logic board

      Pin #10 yellow/black wire connects to Y1

      Pin #12 red/white wire connects to R

      Pin #13 brown wire connects to W2

      Pin #14 purple wire connect to pin 1 on vent plug

      Pin #15 orange wire connects to G

NOTE: *A combination of the yellow, white and orange wires being energized (with 24V "R" signal) determines five different speeds the fan motor will operate at. The fan logic control board uses*

TABLE 7
Troubleshooting ECM™ 142R Outdoor Fan Motors

Check line power to motor	Check between red and black wires for line power
	Verify ground by checking green wire to L1 and L2 line power
Check for 24VAC common signal to motor (against transformer "R" signal)	Check "BR" terminal of fan logic control board
	Check blue fan lead on fan relay terminal of defrost logic control
	** Is not energized in cooling mode until low ambient fan cycling control is closed by 325 PSIG refrigerant pressure. Above 65°F outdoors in cooling mode, the low ambient control is bypassed.
	** Circuit is completed automatically when "B" is energized on the fan logic control board

an outdoor thermistor sensor to determine the speed the fan should operate. It also utilizes the "B" reversing valve input for heat pump mode to determine which speed should operate.

Replacing the Motor

This motor is replaced in one piece. The control cannot be replaced separately from the motor. Even if the control is remotely located, the replacement part will be a new control with harness and new motor.

The correct replacement motor from the manufacturer that is a direct replacement for the failed motor must be used.

Using the wrong motor voids all product warranties and may produce unexpected results.

Always mount the replacement motor and control according to the manufacturers specifications using all required hardware to reduce vibration. Make sure all wires are free of the fan blade and not pinched in mountings or cabinet through points.

Troubleshooting ECM™ Indoor Blower Motors

CAUTION:

Disconnect power from unit before removing or replacing connectors, or servicing motor. To avoid electric shock from the motor's capacitors, disconnect power and wait at least 5 minutes before opening motor.

Symptom	Cause/Procedure
Motor rocks slightly when starting	• This is normal start-up for ECM
Motor won't start • No movement	• Check blower turns by hand • Check power at motor • Check low voltage (24 Vac R to C) at motor • Check low voltage connections (G, Y, W, R, C) at motor • Check for unseated pins in connectors on motor harness • Test with a temporary jumper between R - G • Check motor for tight shaft • Perform motor/control replacement check • **Perform Moisture Check**
• Motor rocks, but won't start	• Check for loose or compliant motor mount • Make sure blower wheel is tight on shaft • Perform motor/control replacement check
Motor oscillates up & down while being tested off of blower	• It is normal for motor to oscillate with no load on shaft
Motor starts, but runs erratically • Varies up and down or intermittent	• Check line voltage for variation or "sag" • Check low voltage connections (G, Y, W, R, C) at motor, unseated pins in motor harness connectors • Check "Bk" for erratic CFM command (in variable-speed applications) • Check out system controls, Thermostat • **Perform Moisture Check**
• "Hunts" or "puffs" at high CFM (speed)	• Does removing panel or filter reduce "puffing"? - Reduce restriction - Reduce max airflow
• Stays at low CFM despite system call for cool or heat CFM	• Check low voltage (Thermostat) wires and connections • Verify fan is not in delay mode; wait until delay complete • "R" missing/not connected at motor • Perform motor/control replacement check
• Stays at high CFM	• "R" missing/not connected at motor • Is fan in delay mode? - wait until delay time complete • Perform motor/control replacement check
• Blower won't shut off	• Current leakage from controls into G, Y or W? Check for Triac switched thermostat or solid-state relay
Excessive noise • Air noise	• Determine if it's air noise, cabinet, duct or motor noise; interview customer, if necessary • High static creating high blower speed? - Is airflow set properly? - Does removing filter cause blower to slow down? Check filter - Use low-pressure drop filter - Check/correct duct restrictions
• Noisy blower or cabinet	• Check for loose blower housing, panels, etc. • High static creating high blower speed? - Check for air whistling through seams in ducts, cabinets or panels - Check for cabinet/duct deformation
• "Hunts" or "puffs" at high CFM (speed)	• Does removing panel or filter reduce "puffing"? - Reduce restriction - Reduce max. airflow
Evidence of Moisture • Motor failure or malfunction has occurred and moisture is present	• Replace motor and **Perform Moisture Check**
• Evidence of moisture present inside air mover	• **Perform Moisture Check**

Do	Don't
• Check out motor, controls, wiring and connections thoroughly before replacing motor	• Automatically assume the motor is bad.
• Orient connectors down so water can't get in - Install "drip loops"	• Locate connectors above 7 and 4 o'clock positions
• Use authorized motor and model #'s for replacement	• Replace one motor or control model # with another (unless an authorized replacement)
• Keep static pressure to a minimum: - Recommend high efficiency, low static filters - Recommend keeping filters clean. - Design ductwork for min. static, max. comfort - Look for and recommend ductwork improvement, where necessary	• Use high pressure drop filters; some have ½" H_2O drop! • Use restricted returns
• Size the equipment wisely	• Oversize system, then compensate with low airflow
• Check orientation before inserting motor connectors	• Plug in power connector backwards • Force plugs

Moisture Check

- Connectors are oriented "down" (or as recommended by equipment manufacturer)
- Arrange harness with "drip loop" under motor
- Is condensate drain plugged?
- Check for low airflow (too much latent capacity)
- Check for undercharged condition
- Check and plug leaks in return ducts, cabinet

Comfort Check

- Check proper airflow settings
- Low static pressure for lowest noise
- Set low continuous-fan CFM
- Use humidistat and 2-speed cooling units
- Use zoning controls designed for ECM that regulate CFM
- Thermostat in bad location?

Replacing ECM Control Module

To replace the control module for the GE variable-speed indoor blower motor, take the following steps:

1. The correct replacement module must be used. The controls are factory programmed for specific operating modes. Even though they look alike, different modules may have completely different functionality.

USING THE WRONG CONTROL MODULE VOIDS ALL PRODUCT WARRANTIES AND MAY PRODUCE UNEXPECTED RESULTS.

2. Begin by removing AC power from the unit being serviced. **DO NOT WORK ON THE MOTOR WITH AC POWER APPLIED.** To avoid electric shock from the motor's capacitors, disconnect power and wait at least 5 minutes before opening motor.
3. It is not necessary to remove the motor from the blower assembly, nor the blower assembly from the unit. Unplug the two cable connectors to the motor control assembly. There are latches on each connector. **DO NOT PULL ON THE WIRES.** The plugs remove easily when properly released.
4. Locate the screws that retain to the motor control bracket to the sheet metal of the unit and remove them. Remove two (2) nuts that retain the control to the bracket and then remove two (2) nuts that retain sheet metal motor control end plate. *Refer to Figure 24.*
5. Disconnect the three (3) wires interior of the motor control by using a thumb and forefinger to squeeze the latch tab and the opposite side of the connector plug, gently pulling the connector. **DO NOT PULL ON THE WIRES, GRIP THE PLUG ONLY**. *Refer to Figure 24.*
6. The control module is now completely detached from the motor. Verify with a standard ohmmeter that the resistance from each motor lead (in the motor plug just removed) to the motor shell is >100K ohms. *Refer to Figure 25.* (Measure to unpainted motor end plate.) If any motor lead fails this test, do not proceed to install the control module. **THE MOTOR IS DEFECTIVE AND MUST BE REPLACED.** Installing the new control module will cause it to fail also.
7. Verify that the replacement control is correct for the application. Refer to the manufacturer's authorized replacement list. **USING THE WRONG CONTROL WILL RESULT IN IMPROPER OR NO BLOWER OPERATION.** Orient the control module so that the 3-wire motor plug can be inserted into the socket in the control. Carefully insert the plug and press it into the socket until it latches. **A SLIGHT CLICK WILL BE HEARD WHEN PROPERLY INSERTED.**
8. Reverse Steps 3-5 to reconnect the motor control to the motor wires, securing the motor control cover plate, mounting the control to the bracket and mounting the motor control bracket back into the unit. **MAKE SURE THE ORIENTATION SELECTED FOR REPLACING THE CONTROL ENSURES THE CONTROL'S CABLE CONNECTORS WILL BE LOCATED DOWNWARD IN THE APPLICATION SO THAT WATER CANNOT RUN DOWN THE CABLES AND INTO THE CONTROL.** ***DO NOT OVERTIGHTEN THE BOLTS.***
9. Plug the 16-pin control plug into the motor. The plug is keyed. Make sure the connector is properly seated and latched.
10. Plug the 5-pin power connector into the motor. Even though the plug is keyed, **OBSERVE THE PROPER ORIENTATION. DO NOT FORCE THE CONNECTOR.** It plugs in very easily when properly oriented. **REVERSING THIS PLUG WILL CAUSE IMMEDIATE FAILURE OF THE CONTROL MODULE.**
11. Final installation check. Make sure the motor is installed as follows:
    a. Motor connectors should be oriented between the 4 o'clock and 8 o'clock positions when the control is positioned in its final location and orientation.
    b. Add a drip loop to the cables so that water cannot enter the motor by draining down the cables. *Refer to Figure 26.*

The installation is now complete. Reapply AC power to the HVAC equipment and verify that the new motor control module is working properly. Follow the manufacturer's procedures for disposition of the old control module.

Figure 24
Control Disassembly

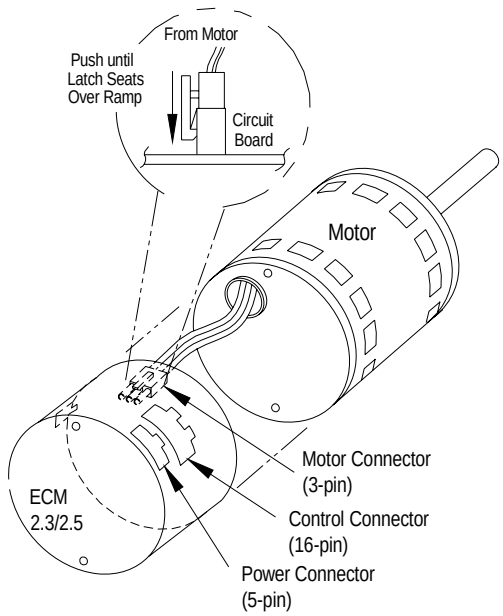

Figure 25
Winding Test

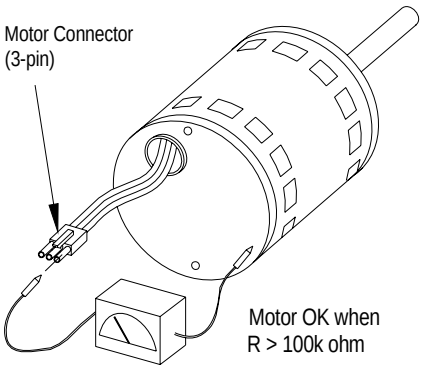

Figure 26
Drip Loop

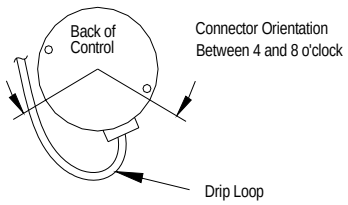

TABLE 8
Troubleshooting ECM™ Indoor Blower Motors

Mode of Operation	OFF	Continuous Blower (Ventilation Mode)	Part Load Cooling ("Y1-Y2" Jumper Removed)	Full Load Cooling	Dehum. Mode (when equipped)	Part Load Heat Pump ("Y1-Y2" Jumper Removed)	Full Load Heat Pump	Heat Pump Full Load w/ 1st Bank of Elec. Heat	Heat Pump Full Load w/ 1st & 2nd Bank of Elec. Heat	Emergency Heat Mode
Thermostat 24 VAC Input Signals	—	"G"	"G", "Y1"	"G", "Y1","Y2"	"D"	"G", "B", "Y1"	"G", "B", "Y1", "Y2"	"G", "Y1", "Y2", "B", "W1". "W2"	"G", "Y1", "Y2", "B", "W2", "W3"	"G", "W2", "W3"
Pin #1	24 VAC "C" (Common) Signal, Always Energized									
Pin #2								X		
Pin #3	24 VAC "C" (Common) Signal, Always Energized									
Pin #4	Not Used									
Pin #5	Not Used									
Pin #6			X	X	X	X	X	X	X	
Pin #7	Not Used									
Pin #8	Not Used									
Pin #9						X	X	X	X	
Pin #10	Not Used									
Pin #11	Not Used									
Pin #12	24 VAC Hot "R" Signal, Always Energized									
Pin #13								X	X	X
Pin #14				X			X	X	X	
Pin #15		X	X	X	X	X	X	X	X	X
Pin #16	Not Used									

FIGURE 27
Control Connector Motor Half

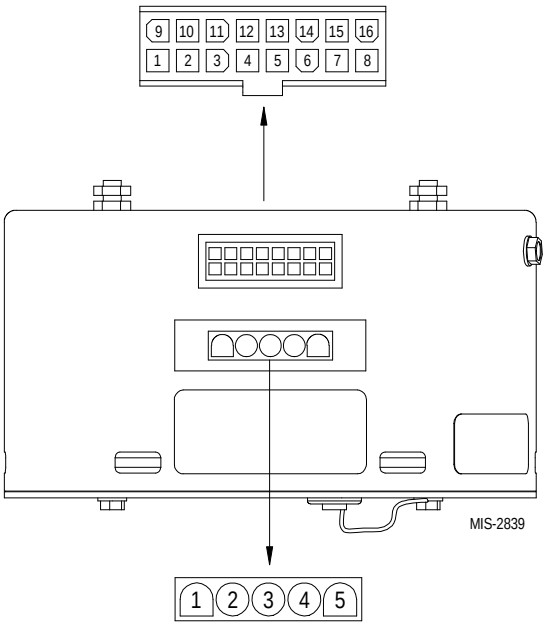

Power Connector Motor Half

Power Connector	
PWB Header	**AMP 1-350945-0**
PIN	Description
1	Jumper Pin 1 to Pin 2 for 120VAC Line Input Only **
2	
3	Chassis Ground
4	AC Line
5	AC Line

* Suggested mating connector
Housing — AMP 350809-1
Contact — AMP 350537-1

** **WARNING – Applying 240VAC line input with PIN 1 to PIN 2 jumper in place <u>will permanently damage unit!</u>**

Fan Blade Setting Dimensions

The correct fan blade setting for proper air delivery across the outdoor coil is shown in Figure 28. Refer to Table 9 for unit specific dimension.

Any service work requiring removal or adjustment in the fan and/or motor area will require that the dimensions below be checked and blade adjusted in or out on the motor shaft accordingly.

FIGURE 28
Fan Blade Setting

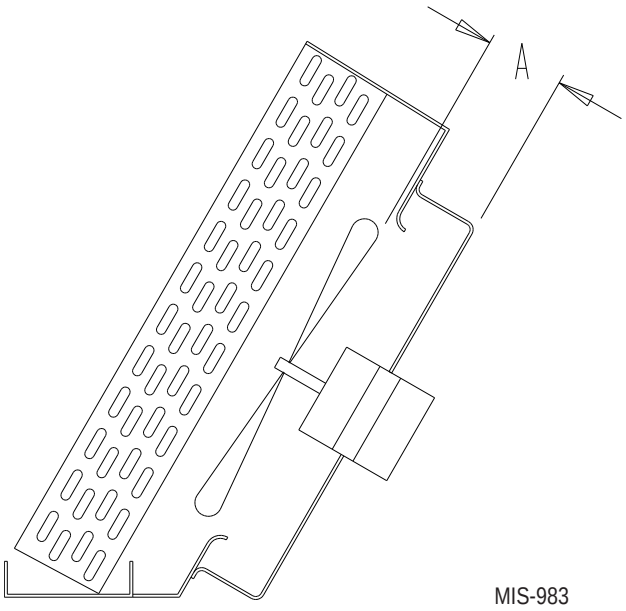

TABLE 9
Fan Blade Dimensions

Model	Dimension A
Q24H4 Q30H4 Q36H4 Q43H4 Q48H4	.500"

R-410A Refrigerant Charge

This unit was charged at the factory with the quantity of refrigerant listed on the serial plate. AHRI capacity and efficiency ratings were determined by testing with this refrigerant charge quantity.

The following pressure tables show nominal pressures for the units. Since many installation specific situations can affect the pressure readings, this information should only be used by certified technicians as a guide for evaluating proper system performance. They shall not be used to adjust charge. If charge is in doubt, reclaim, evacuate and recharge the unit to the serial plate charge.

Removal of Fan Shroud

1. Disconnect all power to the unit before servicing.
2. The unit can be rolled into the room, or the wall sleeve louver can be removed from outside of the building to access the condenser coil for cleaning or to service the outdoor fan.
3. The fan shroud and motor assembly can be removed from the unit by four (4) screws and the coil top fill, then the six (6) screws from the shroud sides. Fan motor must be unplugged from motor controller. The assembly can now be lifted/slid out from the condenser section (see Figure 29).
4. The fan assembly or coil can now be serviced.
5. Reverse the steps to reassemble.

FIGURE 29
Fan Shroud Removal

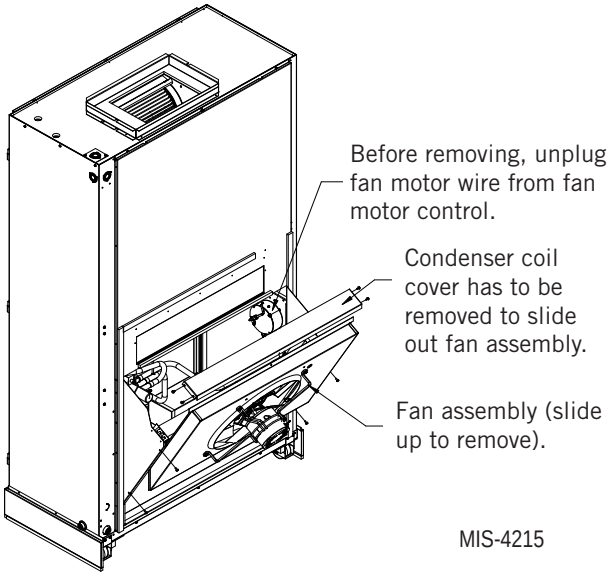

TABLE 10A
Cooling Pressure – Standard Airflow

Air Temperature Entering Outdoor Coil °F

Model	Return Air Temp (DB/WB)	Pressure	75	80	85	90	95	100	105	110	115	120	125
Q24H4	75/62	Low Side	122	125	128	130	133	135	137	139	141	143	145
		High Side	291	314	337	361	385	410	435	460	486	513	540
	80/67	Low Side	130	134	137	139	142	145	147	149	151	153	155
		High Side	299	322	346	370	395	420	446	472	499	526	554
	85/72	Low Side	135	138	141	144	147	150	152	154	156	158	160
		High Side	309	333	358	383	409	435	462	489	516	544	573
Q30H4	75/62	Low Side	123	125	127	129	131	133	135	137	139	141	143
		High Side	313	333	354	376	400	424	450	476	504	532	562
	80/67	Low Side	131	134	136	138	140	142	144	147	149	151	153
		High Side	321	342	363	386	410	435	461	488	517	546	577
	85/72	Low Side	136	138	140	143	145	147	149	152	154	156	158
		High Side	332	354	376	400	424	450	477	505	535	565	597
Q36H4	75/62	Low Side	125	128	131	133	136	137	139	140	142	142	143
		High Side	332	355	378	403	428	455	482	510	539	568	599
	80/67	Low Side	134	137	140	143	145	147	149	150	151	152	153
		High Side	340	364	388	413	439	466	494	523	553	583	614
	85/72	Low Side	139	142	145	148	150	152	154	155	157	158	158
		High Side	352	376	402	428	455	483	512	541	572	603	636
Q43H4	75/62	Low Side	125	128	131	133	136	138	140	142	143	145	146
		High Side	321	344	367	391	415	441	467	494	522	550	579
	80/67	Low Side	133	137	140	143	145	147	150	151	153	155	156
		High Side	330	353	376	401	426	452	479	507	535	564	594
	85/72	Low Side	138	142	145	148	150	153	155	157	159	160	161
		High Side	341	365	390	415	441	468	496	524	554	584	615
Q48H4	75/62	Low Side	125	127	129	132	134	136	138	140	142	144	145
		High Side	332	354	377	401	425	451	477	504	532	561	591
	80/67	Low Side	133	136	138	141	143	145	148	150	152	154	155
		High Side	341	363	387	411	436	462	489	517	546	576	606
	85/72	Low Side	138	141	143	146	148	151	153	155	157	159	161
		High Side	353	376	400	426	452	479	507	535	565	596	627

Low side pressure ± 4 PSIG
High side pressure ± 10 PSIG

Tables are based upon rated CFM (airflow) across the evaporator coil. If there is any doubt as to correct operating charge being in the system, the charge should be removed and system evacuated and recharged to serial plate charge weight.

NOTE: *Pressure table based on high speed condenser fan operation. If condensing pressures appear elevated check condenser fan wiring. See* **Condenser Fan Operation** *on page 27.*

TABLE 10B
Heating Pressure – Standard Airflow

Air Temperature Entering Outdoor Coil °F

Model	Indoor	Heating	0	5	10	15	20	25	30	35	40	45	50	55	60	65
Q24H4	70	Low Side	43	48	53	59	65	72	78	86	93	101	109	118	127	136
		High Side	270	275	280	286	292	299	306	314	323	331	341	351	361	373
Q30H4	70	Low Side	33	39	45	52	58	65	73	80	88	96	104	112	121	130
		High Side	230	247	262	277	291	305	317	329	339	350	359	367	375	381
Q36H4	70	Low Side	31	39	46	53	60	67	74	81	88	95	102	109	116	123
		High Side	252	259	265	272	279	286	293	300	307	315	322	329	337	344
Q43H4	70	Low Side	38	43	49	55	61	68	74	81	88	96	103	111	119	127
		High Side	265	271	277	283	290	297	305	312	320	328	337	345	354	363
Q48H4	70	Low Side	27	34	40	47	54	61	68	75	83	90	98	105	113	121
		High Side	251	256	262	268	274	280	287	294	301	309	317	325	334	343

TABLE 11
Cooling Pressure – Balanced Climate Airflow

Air Temperature Entering Outdoor Coil °F

Model	Return Air Temp (DB/WB)	Pressure	75	80	85	90	95	100	105	110	115	120	125
Q24H4	75/62	Low Side	116	119	122	124	127	129	131	133	135	136	138
		High Side	291	312	333	355	378	402	426	451	478	505	532
	80/67	Low Side	125	128	130	133	136	138	140	142	144	146	148
		High Side	299	320	341	364	388	412	437	463	490	518	546
	85/72	Low Side	129	132	135	138	140	143	145	147	149	151	153
		High Side	309	331	353	377	401	426	452	479	507	536	565
Q30H4	75/62	Low Side	117	120	122	124	127	129	131	133	134	136	137
		High Side	305	307	350	373	397	422	447	473	500	527	554
	80/67	Low Side	125	128	131	133	136	138	140	142	144	145	147
		High Side	313	336	359	383	408	433	459	485	512	540	569
	85/72	Low Side	130	133	135	138	140	143	145	147	149	151	152
		High Side	324	347	372	396	422	448	475	502	530	559	588
Q36H4	75/62	Low Side	125	125	126	127	128	130	131	133	135	138	140
		High Side	379	384	392	404	420	439	462	490	520	555	593
	80/67	Low Side	134	134	135	136	137	139	140	142	145	149	150
		High Side	389	394	402	414	431	451	474	502	534	569	608
	85/72	Low Side	138	139	139	140	142	143	145	147	150	152	155
		High Side	402	407	416	429	446	466	491	520	552	589	629
Q43H4	75/62	Low Side	119	121	123	125	127	129	131	133	135	136	137
		High Side	313	336	360	384	409	434	460	486	513	540	568
	80/67	Low Side	127	129	132	134	136	138	140	142	144	146	147
		High Side	321	345	369	394	419	445	472	499	526	554	582
	85/72	Low Side	131	134	136	139	141	143	145	147	149	151	152
		High Side	332	357	382	408	434	461	488	516	544	573	603
Q48H4	75/62	Low Side	118	121	123	125	127	129	131	133	135	136	138
		High Side	324	346	369	393	418	443	470	497	524	552	582
	80/67	Low Side	127	129	131	134	136	138	140	142	144	146	148
		High Side	332	355	379	403	429	455	482	509	538	567	597
	85/72	Low Side	131	134	136	139	141	143	145	147	149	151	153
		High Side	344	367	392	418	444	471	499	527	556	586	617

Low side pressure ± 4 PSIG
High side pressure ± 10 PSIG

Tables are based upon Balanced Climate CFM (airflow) across the evaporator coil. If there is any doubt as to correct operating charge being in the system, the charge should be removed and system evacuated and recharged to serial plate charge weight.

NOTE: *Pressure table based on high speed condenser fan operation. If condensing pressures appear elevated check condenser fan wiring. See* **Condenser Fan Operation** *on page 27.*

TABLE 12
Electrical Specifications – Q**H4 Series

Model	Rated Volts & Phase	No. Field Power Circuits	Single Circuit				Dual Circuit							
			① Minimum Circuit Ampacity	② Maximum External Fuse or Ckt. Brkr.	③ Field Power Wire Size	③ Ground Wire	① Minimum Circuit Ampacity		② Maximum External Fuse or Ckt. Breaker		③ Field Power Wire Size		③ Ground Wire Size	
							Ckt. A	Ckt. B	Ckt. A	Ckt. B	Ckt. A	Ckt. B	Ckt. A	Ckt. B
Q24H4-A0Z	230/208-1	1	24	35	8	10								
-A05		1	50	50	8	10								
Q24H4-B0Z	230/208-3	1	16	20	12	12								
-B06		1	34	35	8	10								
-B09		1	43	45	8	10								
Q24H4-C0Z	460-3	1	12	15	14	14								
-C06		1	21	25	12	12								
-C09		1	25	25	10	10								
Q30H4-A0Z	230/208-1	1	25	35	8	10								
-A05		1	51	60	6	10								
Q30H4-B0Z	230/208-3	1	19	25	10	10								
-B06		1	37	40	8	10								
-B09		1	46	50	8	10								
Q30H4-C0Z	460-3	1	10	15	14	14								
-C06		1	19	20	12	12								
-C09		1	23	25	10	10								
Q36H4-A0Z	230/208-1	1	27	40	8	10								
-A05		1	53	60	6	10								
-A10		1 or 2	79	80	4	8	52	27	60	30	6	10	10	10
Q36H4-B0Z	230/208-3	1	21	30	10	10								
-B06		1	39	45	8	10								
-B09		1	48	50	8	10								
④ -B15		1	48	50	8	10								
Q36H4-C0Z	460-3	1	12	15	14	14								
-C06		1	21	25	10	10								
-C09		1	25	25	10	10								
④ -C15		1	34	35	8	10								
Q43H4-A0Z	230/208-1	1	33	40	8	10								
-A05		1	59	60	6	10								
-A10		1 or 2	85	90	4	8	59	26	60	30	6	10	10	10
Q43H4-B0Z	230/208-3	1	26	30	10	10								
-B06		1	44	50	8	10								
-B09		1	53	60	6	10								
④ -B15		1	53	60	6	10								
Q43H4-C0Z	460-3	1	11	15	14	14								
-C06		1	20	20	12	12								
-C09		1	25	25	10	10								
④ -C15		1	25	30	10	10								
Q48H4-A0Z	230/208-1	1	34	40	8	10								
-A05		1	60	60	6	10								
-A10		1 or 2	86	90	3	8	59	26	60	30	6	10	10	10
④ -A15		1 or 2	86	90	3	8	59	26	60	30	6	10	10	10
Q48H4-B0Z	230/208-3	1	27	30	10	10								
-B06		1	45	50	8	10								
-B09		1	54	60	6	10								
④ -B15		1	54	60	6	10								
Q48H4-C0Z	460-3	1	12	15	14	14								
-C06		1	21	25	10	10								
-C09		1	25	25	10	10								
④ -C15		1	26	30	10	10								

① These "Minimum Circuit Ampacity" values are to be used for sizing the field power conductors. Refer to the National Electrical code (latest version), Article 310 for power conductor sizing. ***CAUTION:*** *When more than one field power circuit is run through one conduit, the conductors must be derated. Pay special attention to note 8 of Table 310 regarding Ampacity Adjustment Factors when more than three (3) current carrying conductors are in a raceway.*

② Maximum size of the time delay fuse or circuit breaker for protection of field wiring conductors.

③ Based on 75°copper wire. All wiring must conform to the National Electrical Code and all local codes.

④ Maximum KW that can operate with the heat pump on is 9KW. Full heat available during emergency heat mode.

NOTE: *The Maximum Overcurrent Protection (MOCP) value listed is the maximum value as per UL 1995 calculations for MOCP (branch-circuit conductor sizes in this chart are based on this MOCP). The actual factory-installed overcurrent protective device (circuit breaker) in this model may be lower than the maximum UL 1995 allowable MOCP value, but still above the UL 1995 minimum calculated value or Minimum Circuit Ampacity (MCA) listed.*

IMPORTANT: *While this electrical data is presented as a guide, it is important to electrically connect properly sized fuses and conductor wires in accordance with the National Electrical Code and all local codes.*

TABLE 13
Indoor Blower Performance

Model	Rated ESP*	Maximum ESP*	Vent*	Rated CFM*	Balanced Climate CFM*
Q24H4	0.10	0.5	825	825	600
Q30H4	0.10	0.5	900	900	650
Q36H4	0.15	0.5	1100	1125	825
Q43H4	0.15	0.5	1300	1300	910
Q48H4	0.20	0.5	1500	1500	1050

* These units are equipped with a variable speed (ECM) indoor motor that automatically adjusts itself to maintain approximately the same rate of indoor airflow in both heating and cooling, dry and wet coil conditions and at both 230/208 or 460 volts.

TABLE 14
Maximum ESP of Operation
Electric Heat Only

Model	All
Outlet	Top
Speed	Rated
-A0Z	.50
-A05	.50
-A10	.50
-A15	.50
-B0Z	.50
-B06	.50
-B09	.50
-B15	.50
-C0Z	.50
-C06	.50
-C09	.50
-C15	.50

Values shown are for units equipped with standard 1" throwaway filter or 1" washable filter.

Derate ESP by .15 for 2" pleated filters.

TABLE 15
Electric Heat

Nominal KW	At 240V ①				At 208V ①				At 480V ②			At 460V ②		
	KW	1-Ph Amps	3-Ph Amps	BTUH	KW	1-Ph Amps	3-Ph Amps	BTUH	KW	3-Ph Amps	BTUH	KW	3-Ph Amps	BTUH
5.0	5.0	20.8		17,065	3.75	18.0		12,799						
6.0	6.0		14.4	20,478	4.50		12.5	15,359	6.0	7.2	20,478	5.52	6.9	18,840
9.0	9.0		21.7	30,717	6.75		18.7	23,038	9.0	10.8	30,717	8.28	10.4	28,260
10.0	10.0	41.7		34,130	7.50	36.1		25,598						
15.0	15.0	62.5	36.1	51,195	11.25	54.1	31.2	38,396	15.0	18.0	51,195	13.80	17.3	47,099

① These electric heaters are available in 230/208V units only.
② These electric heaters are available in 480V units only.

GRAPH 1
Q24H4 FAD Ventilation Delivery

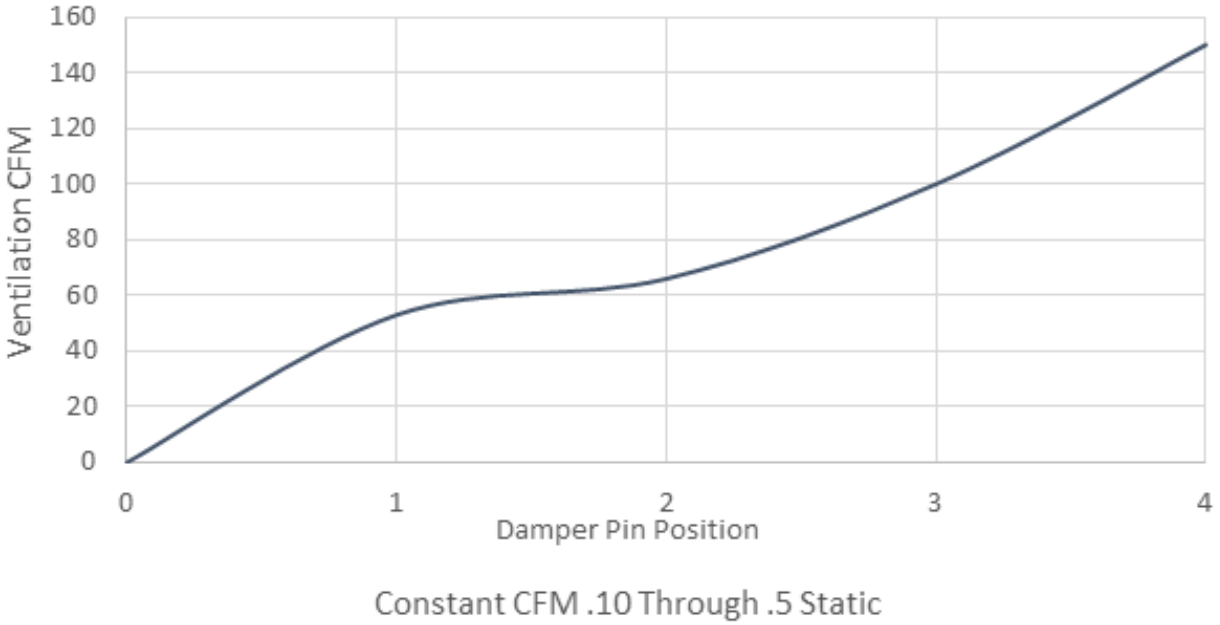

GRAPH 2
Q30H4 FAD Ventilation Delivery

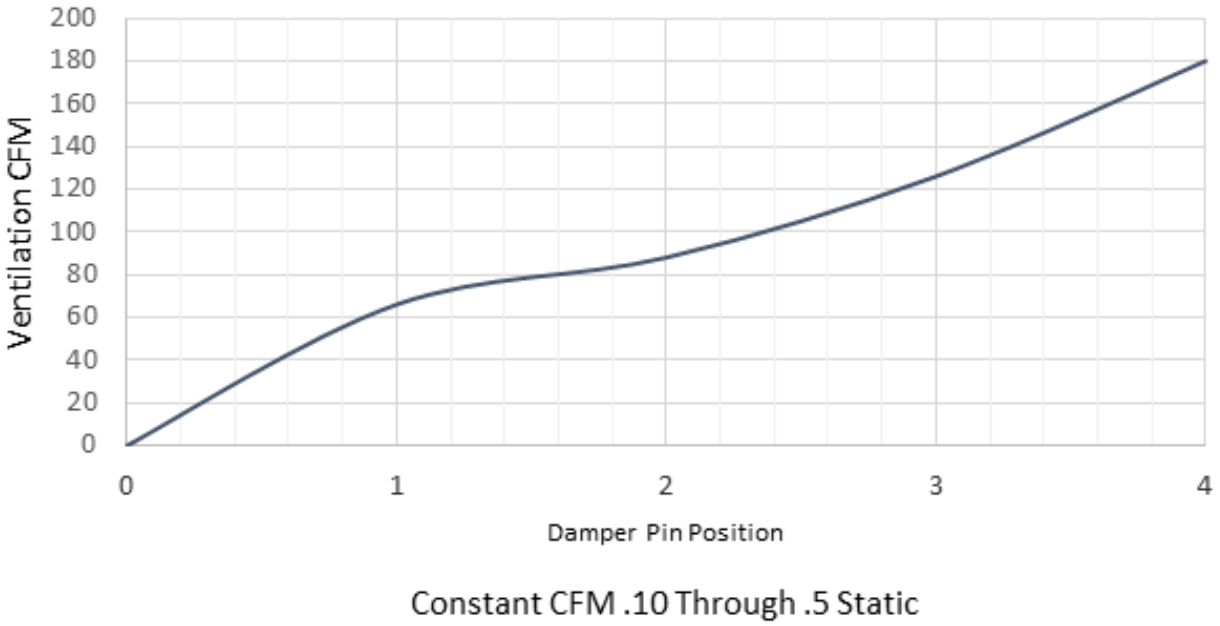

GRAPH 3
Q36H4 FAD Ventilation Delivery

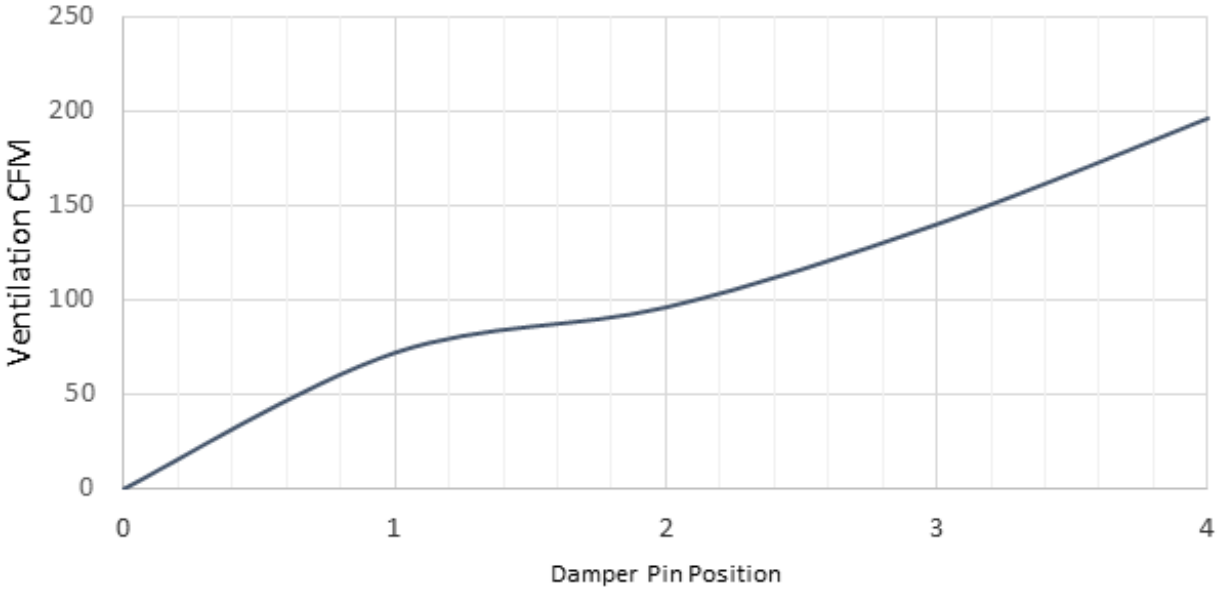

Constant CFM .10 Through .5 Static

GRAPH 4
Q43H4 FAD Ventilation Delivery

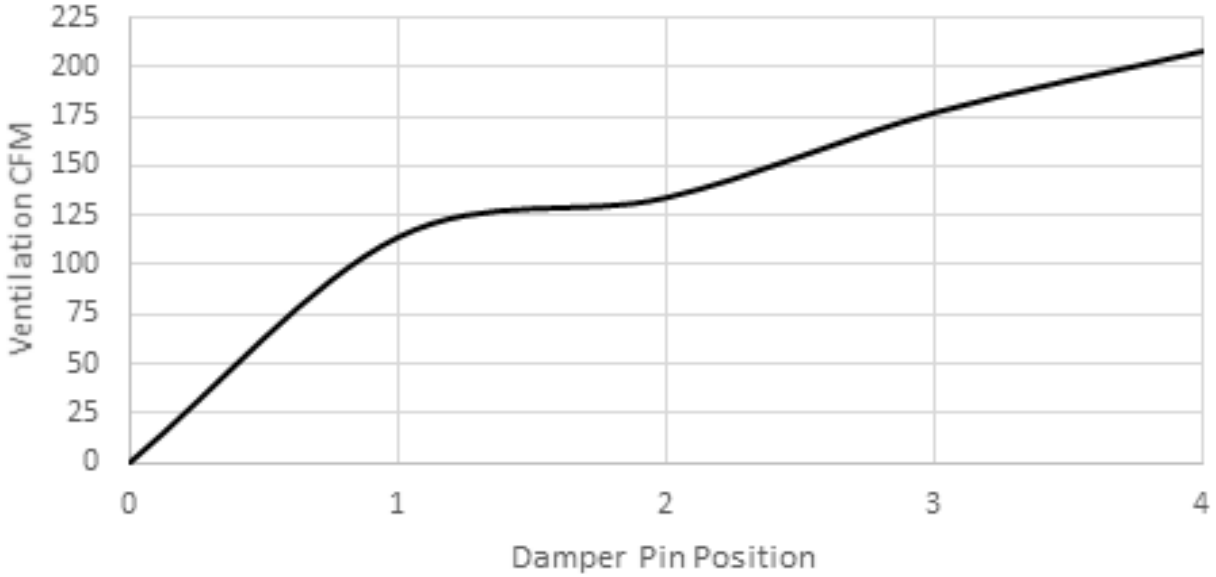

Constant CFM .10 Through .5 Static

GRAPH 5
Q48H4 FAD Ventilation Delivery

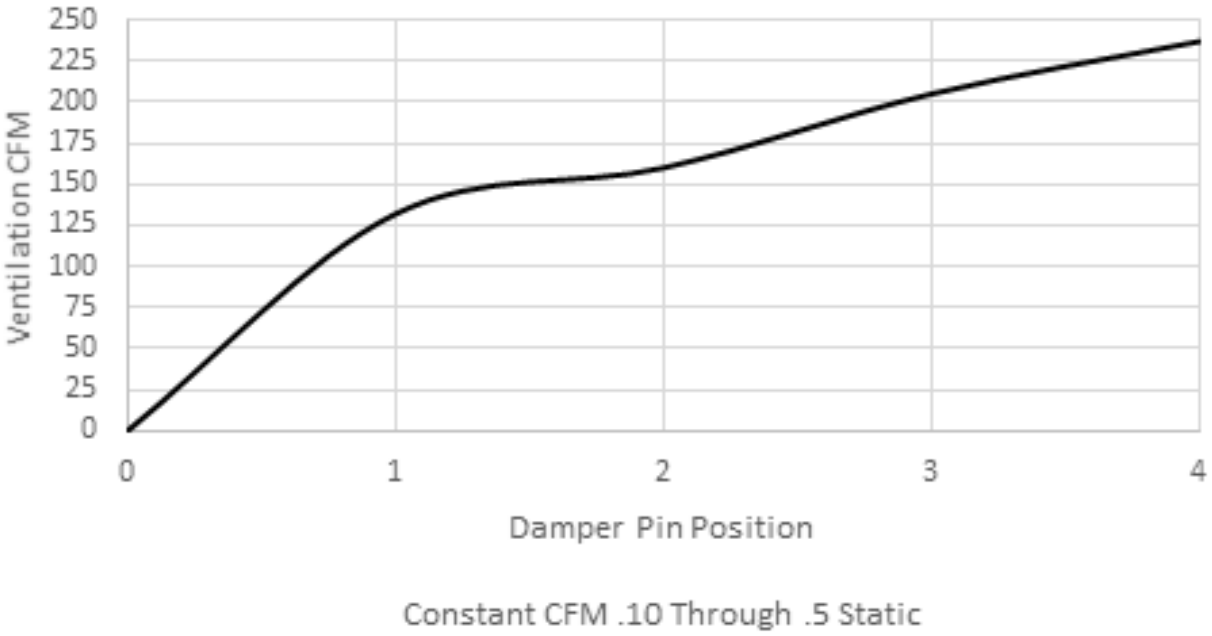

DEHUMIDIFICATION UNIT INSTRUCTIONS

Q**H4D dehumidification models provide a unique dehumidification circuit for periods of low outdoor ambient temperature and high indoor humidity conditions.

Refer to Spec Sheet S3607 for the standard features of the base units and this manual for electrical data.

Dehumidification Circuit

The dehumidification circuit incorporates an independent heat exchanger coil in the supply air stream. This coil uses discharge gas to reheat the supply air after it passes over the cooling coil without requiring the electric resistance heater to be used for reheat purposes. This results in very high mechanical dehumidification capability from the air conditioner on demand without using electric resistance reheat.

The dehumidification refrigerant reheat circuit is controlled by a dehumidification valve directing the refrigerant gas to the normal condenser during periods when standard air conditioning is required. During periods of time of low ambient temperature (approximately 65° to 75° outdoor) and high indoor humidity, a humidistat senses the need for mechanical dehumidification. It then energizes both the compressor circuit and dehumidification valve, thus directing the hot refrigerant discharge gas into a separate desuperheating condenser circuit, which reheats the conditioned air before it is delivered to the room. The refrigerant gas is then routed from the desuperheating condenser to the system condenser for further heat transfer. When the humidistat is satisfied, the system automatically switches back to normal operation and either continues to operate or turns off based on the signal from the wall thermostat. The result is separate humidity control at minimum operating cost.

Dehumidification Sequence of Operation

Dehumidification is controlled through the thermostat (if capable) or through a separate humidistat. On a call for dehumidification mode of operation, the compressor and dehumidification valve of the unit are energized through circuit R - D to provide dehumidification. Dehumidification will continue until the humidistat is satisfied.

Any time there is a call for circuit R - Y1, the dehumidification mode will cancel and the system will return to cooling or heat pump operation.

Balanced Climate™ Mode

Enable Balanced Climate mode for cooling operation ONLY and utilize a 2-stage thermostat to enhance the comfort. To activate this mode, the jumpers between Y1 and Y2 on both low voltage terminal strips (blower section and control panel) need to be removed. Refer to unit wiring diagram for clarity.

This mode will allow the indoor blower to run at a reduced airflow on the first stage of cooling. A 2-stage thermostat connected to Y2 will then allow the airflow to return to normal rated speed if the call for cooling is not satisfied within the allotted time frame specified by the thermostat.

Electronic Expansion Valve

Operation

This model employs an electronic expansion valve (EEV) which meters the refrigerant to the evaporator. In the heat pump application, the EEV is used bi-directionally to meter the refrigerant in both heating and cooling modes. The EEV is made of a stepper motor that is controlled with a step output from the controller. The valve is capable of 480 steps which drives a needle valve that in turn regulates the flow of refrigerant. The EEV allows for tighter control and better capacity management in varying operating conditions than a standard TXV. The EEV system consists of the electronic valve and stator, control board, relay, suction temperature sensor and suction pressure transducer. The pressure transducer and temperature sensor monitor the suction line to provide real time data to the control board so that a real time superheat can be calculated. This then determines the EEV position. The controller is set to maintain around 19° superheat. The relay is used to activate the EEV system's controller anytime that the compressor is energized.

EEV Instructions for Vacuuming, Reclaiming and Charging Unit

⚠ WARNING

Exposure to high pressure refrigerant hazard.

This unit is equipped with an electronic expansion valve (EEV). In order to fully recover refrigerant or evacuate system during repairs, either use service tool P/N 2151-021 to manually open the EEV or be sure to recover and evacuate from all service ports: suction, liquid and discharge.

Failure to do so could result in eye injuries and/or refrigerant burns.

DO NOT connect to the high pressure service port on the front of the unit with the RED circular label. This connection point is under very high pressure and could cause injury and/or refrigerant burns.

The electronic expansion valve moves to a closed position when there is no call to control. In order to pull a complete vacuum, fully reclaim the system or charge the unit, connections to the suction and liquid line service ports need to be utilized or the valve needs to be manually opened first. The valve can be opened manually using the magnetic EEV service tool (Bard P/N 2151-021) shown in Figure 30. To do this, remove the EEV stator coil (red color with retaining nut on top), slide the magnetic tool over the shaft where the stator was removed and turn in a clockwise direction to open the valve to the full open position (directional arrows are provided on the tool).

FIGURE 30
Electronic Expansion Valve (EEV) and Service Tool

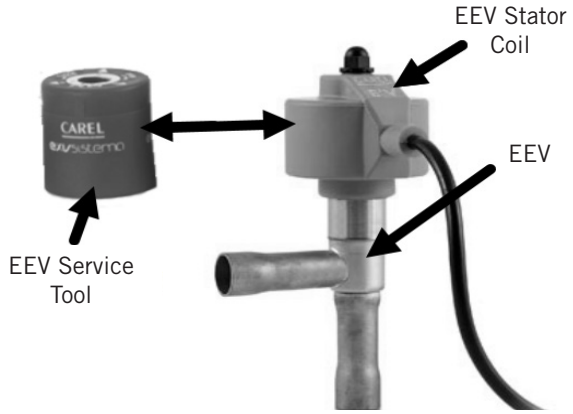

Reapply the EEV stator coil and retaining nut once complete. Upon powering the unit back up, the control board will automatically drive the EEV back to the fully shut position. Once the compressor starts, the control board will again modulate the EEV position to control the system superheat.

The high side connection should be made at the service port located on the liquid line assembly near the unit base on the right side of the unit (see Figure 31).

FIGURE 31
High Side Connection

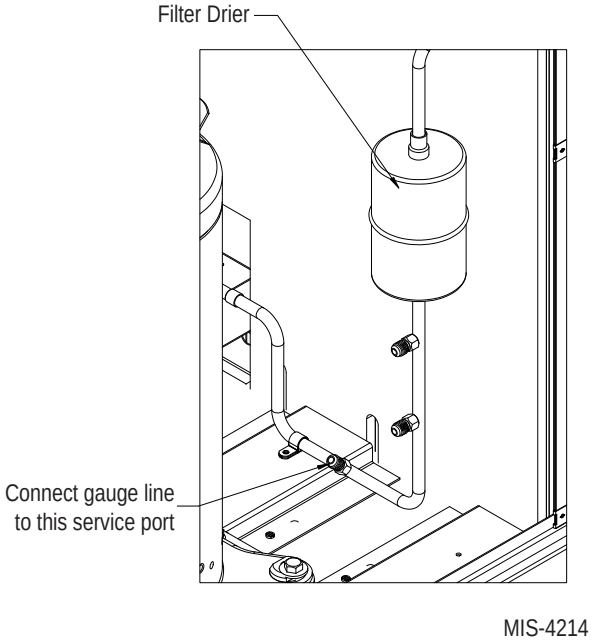

Troubleshooting the Electronic Expansion Valve

The control board has two status LEDs.

- The green LED should be lit anytime that the board has power and the control is functioning.
- The red LED is to show that an alarm is present.

See Table 16 for a guide to know where to start troubleshooting the EEV. Refer to the appropriate unit replacement parts manual for any parts that are needed.

TABLE 16
Electronic Expansion Valve Troubleshooting

Problem	Probable Cause	Troubleshoot
The green LED is not lit.	Controller not receiving 24VAC signal.	Control Board
The green LED is lit, but superheat is not being maintained.	The relay is not closing the controller's DI connection to ground.	Relay
The red LED is flashing and EEV is not controlling superheat properly (13º superheat). One of the following is likely the fault:		
1. Low superheat is detected and the controller is taking steps to protect the system by closing the valve.	Stator is broken or connected incorrectly.	Stator
	Valve is stuck open.	EEV Valve
2. Suction temperature sensor error.	Poor connection of sensor or faulty sensor.	Thermistor
3. Suction pressure transducer error.	Pressure transducer wiring incorrect or faulty transducer.	Transducer
The red LED is on steady.	The operating parameters have been damaged.	Replace Control Board

Control Board

Check that the controller is getting 24VAC signal (GO 24VAC Hot and G 24VAC common). Reference unit wiring diagram for proper connections. If 24V is present but the green LED is not lit, replace the controller. If the green LED is now lit but the superheat is still not being maintained, troubleshoot the relay to check that the DI is connected to G; refer to ***Relay in EEV Control Box***.

Electronic Expansion Valve

Check to see if valve can be moved by manually moving the stepper motor using the EEV service tool shown in Figure 30 (Bard Part # 2151-021). If valve still does not control, check the transducer and thermistor sensors as described on page 49. If sensors are good, replace the valve.

Relay in EEV Control Box

Contacts NO to DI and COM to G must be closed for EEV control to start controlling superheat. Check that the relay is getting 24VAC. Reference unit wiring diagram for proper connections. If 24V is present, measure the resistance between COM and NO; it should be 0 ohms when the relay is getting 24V. If the resistance is out of range, replace the relay.

Stator Coil

Disconnect the stator from the valve and the control and measure the resistance of the windings using an electrical tester. The resistance of both windings should be around 40 ohms +/– 10%. The four wire sets that will have resistance between them are: White and red, green and red, yellow and purple, blue and purple. If the resistance falls outside these values, replace the stator.

Transducer Sensor

1. Check continuity of all three wires from transducer plug to controller plug. Replace wires if poor connection in any wire.
2. Check to ensure wires are correctly connected as follows:

   Blue wire = pin 1 of controller plug to pin C on transducer plug

   Red wire = pin 2 of controller plug to pin B on transducer plug

   Black wire = pin 3 of controller plug to pin A on transducer plug
3. Check that there is 5VDC Nominal between the red and black wires going to the transducer.
4. Check the signal voltage between the blue and black wires (0.5-4.5VDC Actual). The following formula and Figure 32 can be used to determine if the transducer's voltage to pressure ratio is within range. Replace transducer if out of range.

Formula for Tech:

(Measured Pressure x .016) + .5 =
Expected Transducer Signal Voltage (see Figure 32).

FIGURE 32
Voltage to Pressure: Suction Pressure Transducer

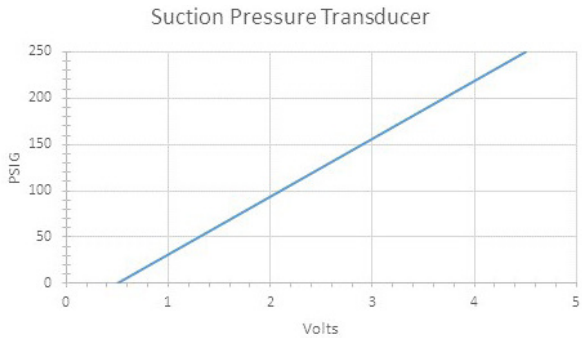

Thermistor Sensor

1. Make a visual check for broken wire insulation, broken wires or cracked epoxy material.
2. Disconnect 10k ohm NTC thermistor from the EEV control box.
3. Use an ohmmeter to measure the resistance between the two connectors. Also use ohmmeter to check for short or open.
4. Compare the resistance reading to Table 17. Use sensor ambient temperature. (Tolerance of part is ±10 %.)
5. If sensor is out of tolerance, shorted, open or reads very low ohms, it should be replaced.

TABLE 17
10K OHM NTC Sensor: Temperature/Resistance

Temperature		Resistance	Temperature		Resistance	Temperature		Resistance	Temperature		Resistance
F	C	Ω	F	C	Ω	F	C	Ω	F	C	Ω
-40	-40	188,500	28.4	-2	29,730	96.8	36	6,700	165.2	74	1,980
-38.2	-39	178,500	30.2	-1	28,480	98.6	37	6,470	167	75	1,920
-36.4	-38	169,000	32	0	27,280	100.4	38	6,250	168.8	76	1,870
-34.6	-37	160,200	33.8	1	26,130	102.2	39	6,030	170.6	77	1,820
-32.8	-36	151,900	35.6	2	25,030	104	40	5,830	172.4	78	1,770
-31	-35	144,100	37.4	3	23,990	105.8	41	5,630	174.2	79	1,920
-29.2	-34	136,700	39.2	4	23,000	107.6	42	5,440	176	80	1,670
-27.4	-33	129,800	41	5	22,050	109.4	43	5,260	177.8	81	1,620
-25.6	-32	123,300	42.8	6	21,150	111.2	44	5,080	179.6	82	1,580
-23.8	-31	117,100	44.6	7	20,300	113	45	4,910	181.4	83	1,530
-22	-30	111,300	46.4	8	19,480	114.8	46	4,750	183.2	84	1,490
-20.2	-29	105,700	48.2	9	18,700	116.6	47	4,590	185	85	1,450
-18.4	-28	100,500	50	10	17,960	118.4	48	4,440	186.8	86	1,441
-16.6	-27	95,520	51.8	11	17,240	120.2	49	4,300	188.6	87	1,370
-14.8	-26	90,840	53.6	12	16,560	122	50	4,160	190.4	88	1,340
-13	-25	86,430	55.4	13	15,900	123.8	51	4,030	192.2	89	1,300
-11.2	-24	82,260	57.2	14	15,280	125.6	52	3,900	194	90	1,270
-9.4	-23	78,330	59	15	14,690	127.4	53	3,770	195.8	91	1,230
-7.6	-22	74,610	60.8	16	14,120	129.2	54	3,650	197.6	92	1,200
-5.8	-21	71,100	62.6	17	13,580	131	55	3,540	199.4	93	1,170
-4	-20	67,770	64.4	18	13,060	132.8	56	3,430	201.2	94	1,140
-2.2	-19	64,570	66.2	19	12,560	134.6	57	3,320	203	95	1,110
-0.4	-18	61,540	68	20	12,090	136.4	58	3,220	204.8	96	1,080
1.4	-17	58,680	69.8	21	11,630	138.2	59	3,120	206.6	97	1,050
3.2	-16	55,970	71.6	22	11,200	140	60	3,020	208.4	98	1,020
5	-15	53,410	73.4	23	10,780	141.8	61	2,930	210.2	99	1,000
6.8	-14	50,980	75.2	24	10,380	143.6	62	2,840	212	100	970
8.6	-13	48,680	77	25	10,000	145.4	63	2,750			
10.4	-12	46,500	78.8	26	9,630	147.2	64	2,670			
12.2	-11	44,430	80.6	27	9,280	149	65	2,590			
14	-10	42,470	82.4	28	8,940	150.8	66	2,510			
15.8	-9	40,570	84.2	29	8,620	152.6	67	2,440			
17.6	-8	38,770	86	30	8,310	154.4	68	2,360			
19.4	-7	37,060	87.8	31	8,010	156.2	69	2,300			
21.2	-6	35,440	89.6	32	7,730	158	70	2,230			
23	-5	33,900	91.4	33	7,450	159.8	71	2,160			
24.8	-4	32,440	93.2	34	7,190	161.6	72	2,100			
26.6	-3	31,050	95	35	6,940	163.4	73	2,040			

Heat Pump Cooling Mode Circuit Diagram

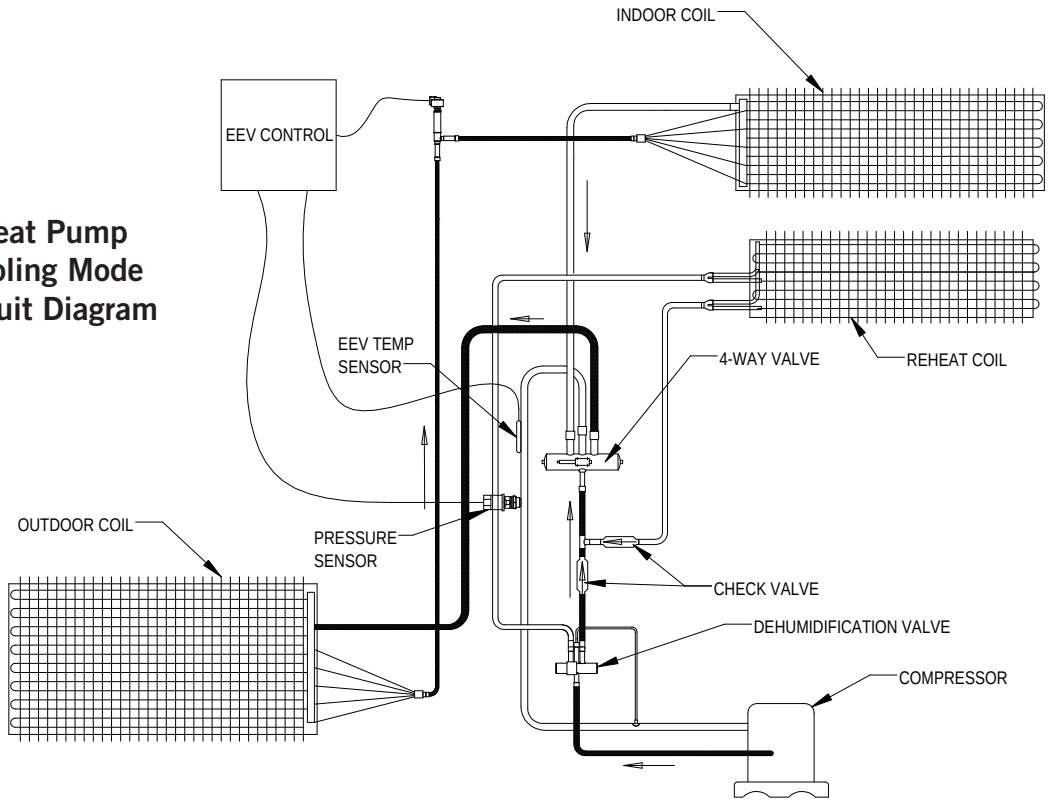

MIS-3959

Heat Pump Dehumidification Mode Circuit Diagram

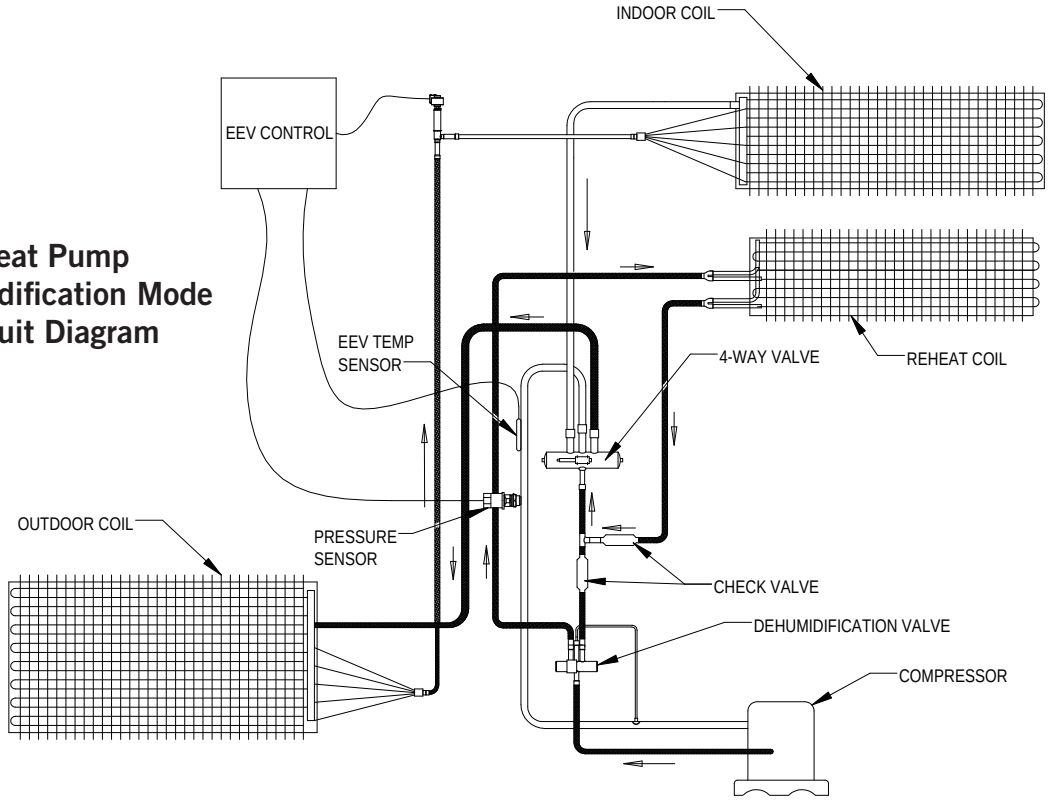

MIS-4065

Q24H4D Cooling and Dehumidification Application Data[1]

DB/WB[2]	OD Temp.	75°F		85°F		95°F	
	Mode	A/C	Dehum	A/C	Dehum	A/C	Dehum
75/64.1 (55% RH)	Total Cooling Btuh	25,100	10,000	23,500	6,300	21,600	1,900
	Sensible Btuh	18,200	3,000	17,500	300	16,800	(2,600)
	S/T	0.725	0.30	0.745	0.05	0.778	0
	Latent Btuh	6,900	7,000	6,000	6,000	4,800	4,500
	Lbs. H2O/hr.	6.5	6.6	5.7	5.7	4.5	4.2
	Supply Air DB	55.1	70.6	55.9	74.7	56.7	78.9
	Supply Air WB	53.9	58.9	54.6	60.9	55.4	63.1
	Suction PSIG[3]	132	125	134	127	136	132
	Discharge PSIG[3]	303	265	345	295	392	327
75/65.5 (60% RH)	Total Cooling Btuh	26,000	10,900	24,300	7,500	22,500	3,200
	Sensible Btuh	17,300	4,500	16,400	1,800	15,700	(1,000)
	S/T	0.665	0.413	0.675	0.240	0.698	0
	Latent Btuh	8,700	6,400	7,900	5,700	6,800	4,200
	Lbs. H2O/hr.	8.2	6.0	7.5	5.4	6.4	4.0
	Supply Air DB	56.1	71.6	57.0	75.6	57.9	79.9
	Supply Air WB	55.0	59.9	55.9	61.8	56.7	64.0
	Suction PSIG[3]	134	128	137	130	139	134
	Discharge PSIG[3]	224	268	320	298	367	330
75/66.7 (65% RH)	Total Cooling Btuh	26,900	12,200	25,200	8,700	23,400	4,400
	Sensible Btuh	16,200	6,100	15,400	3,300	14,600	500
	S/T	0.602	0.50	0.611	0.38	0.624	0.11
	Latent Btuh	10,700	6,100	9,800	5,400	8,800	3,900
	Lbs. H2O/hr.	10.1	5.8	9.2	5.1	8.3	3.7
	Supply Air DB	57.3	72.6	58.2	76.6	59.0	80.8
	Supply Air WB	56.3	60.8	57.2	62.7	58.0	64.9
	Suction PSIG[3]	137	131	139	133	141	137
	Discharge PSIG[3]	199	271	294	300	342	333

[1] Values listed are with ventilation package disabled

[2] Return air temperature °F @ Default airflow (825 CFM) for AC tests and Balanced Climate airflow (600 CFM) for dehumidification tests

[3] Suction pressure +/- 4 psi, Discharge pressure +/- 10 psi

Q30H4D Cooling and Dehumidification Application Data[1]

DB/WB[2]	OD Temp.	75°F		85°F		95°F	
	Mode	A/C	Dehum	A/C	Dehum	A/C	Dehum
75/64.1 (55% RH)	Total Cooling Btuh	29,700	11,900	28,100	7,900	26,600	4,100
	Sensible Btuh	20,400	3,300	19,700	200	19,300	(2,800)
	S/T	0.687	0.28	0.701	0.03	0.726	0
	Latent Btuh	9,300	8,600	8,400	7,700	7,300	6,900
	Lbs. H20/hr.	8.8	8.1	7.9	7.3	6.9	6.5
	Supply Air DB	53.5	70.7	54.3	74.8	55.3	78.8
	Supply Air WB	52.4	58.5	53.1	60.5	54.0	62.4
	Suction PSIG[3]	125	123	127	127	130	130
	Discharge PSIG[3]	314	274	358	304	406	336
75/65.5 (60% RH)	Total Cooling Btuh	30,700	12,800	28,900	8,900	27,400	5,100
	Sensible Btuh	19,300	2,600	18,500	(500)	18,000	(3,500)
	S/T	0.629	0.203	0.640	0	0.657	0
	Latent Btuh	11,400	10,200	10,400	9,400	9,400	8,600
	Lbs. H20/hr.	10.8	9.6	9.8	8.9	8.9	8.1
	Supply Air DB	54.8	71.6	55.5	75.7	56.5	79.7
	Supply Air WB	53.7	59.6	54.5	61.5	55.4	63.4
	Suction PSIG[3]	128	126	131	130	133	133
	Discharge PSIG[3]	316	277	360	307	408	339
75/66.7 (65% RH)	Total Cooling Btuh	31,500	13,800	29,700	10,000	28,200	6,200
	Sensible Btuh	18,000	1,900	17,200	(1,300)	16,700	(4,300)
	S/T	0.571	0.14	0.579	0	0.592	0
	Latent Btuh	13,500	11,900	12,500	11,300	11,500	10,500
	Lbs. H20/hr.	12.7	11.2	11.8	10.7	10.8	9.9
	Supply Air DB	56.1	72.5	56.8	76.7	57.8	80.7
	Supply Air WB	55.1	60.6	55.9	62.6	56.8	64.5
	Suction PSIG[3]	131	129	134	133	137	136
	Discharge PSIG[3]	318	279	362	310	410	341

[1] Values listed are with ventilation package disabled

[2] Return air temperature °F @ Default airflow (900 CFM) for AC tests and Balanced Climate airflow (650 CFM) for dehumidification tests

[3] Suction pressure +/- 4 psi, Discharge pressure +/- 10 psi

Q36H4D Cooling and Dehumidification Application Data[1]

DB/WB[2]	OD Temp.	75°F		85°F		95°F	
	Mode	A/C	Dehum	A/C	Dehum	A/C	Dehum
75/64.1 (55% RH)	Total Cooling Btuh	34,800	14,800	32,700	11,000	31,200	6,500
	Sensible Btuh	23,100	3,400	22,300	100	23,600	(3,300)
	S/T	0.664	0.23	0.682	0.01	0.756	0
	Latent Btuh	11,700	11,400	10,400	10,900	7,600	9,800
	Lbs. H2O/hr.	11.0	10.8	9.8	10.3	7.2	9.2
	Supply Air DB	55.2	71.2	56.0	74.9	56.7	78.8
	Supply Air WB	53.2	58.2	53.8	59.9	54.5	61.7
	Suction PSIG[3]	131	120	133	123	135	125
	Discharge PSIG[3]	335	282	382	312	432	345
75/65.5 (60% RH)	Total Cooling Btuh	38,100	15,300	33,600	12,000	32,100	7,500
	Sensible Btuh	22,900	2,200	20,700	(700)	22,000	(4,200)
	S/T	0.601	0.144	0.616	0	0.685	0
	Latent Btuh	15,200	13,100	12,900	12,700	10,100	11,700
	Lbs. H2O/hr.	14.3	12.4	12.2	12.0	9.5	11.0
	Supply Air DB	56.3	72.3	57.3	75.9	58.0	79.7
	Supply Air WB	54.6	59.1	55.3	61.0	56.0	62.7
	Suction PSIG[3]	134	124	136	126	138	128
	Discharge PSIG[3]	338	289	384	315	434	348
75/66.7 (65% RH)	Total Cooling Btuh	39,000	16,300	34,600	13,000	33,100	8,500
	Sensible Btuh	21,300	1,300	19,100	(1,600)	20,400	(5,000)
	S/T	0.546	0.08	0.552	0	0.616	0
	Latent Btuh	17,700	15,000	15,500	14,600	12,700	13,500
	Lbs. H2O/hr.	16.7	14.2	14.6	13.8	12.0	12.7
	Supply Air DB	57.6	73.2	58.6	76.9	59.3	80.7
	Supply Air WB	56.1	60.2	56.8	62.1	57.5	63.8
	Suction PSIG[3]	136	127	138	128	141	131
	Discharge PSIG[3]	340	293	386	319	437	352

[1] Values listed are with ventilation package disabled

[2] Return air temperature °F @ Default airflow (1125 CFM) for AC tests and Balanced Climate airflow (825 CFM) for dehumidification tests

[3] Suction pressure +/- 4 psi, Discharge pressure +/- 10 psi

Q43H4D Cooling and Dehumidification Application Data[1]

DB/WB[2]	OD Temp.	75°F		85°F		95°F	
	Mode	A/C	Dehum	A/C	Dehum	A/C	Dehum
75/64.1 (55% RH)	Total Cooling Btuh	42,600	16,800	40,200	11,400	37,700	5,600
	Sensible Btuh	29,300	3,500	28,100	(600)	27,000	(4,800)
	S/T	0.688	0.21	0.699	0	0.716	0
	Latent Btuh	13,300	13,300	12,100	12,000	10,700	10,400
	Lbs. H20/hr.	12.5	12.5	11.4	11.3	10.1	9.8
	Supply Air DB	54.8	71.9	55.5	76.0	56.3	80.2
	Supply Air WB	53.2	58.2	53.8	60.2	54.5	62.3
	Suction PSIG[3]	131	121	135	126	138	130
	Discharge PSIG[3]	325	278	371	308	420	340
75/65.5 (60% RH)	Total Cooling Btuh	43,500	18,000	41,300	12,600	38,800	6,700
	Sensible Btuh	27,900	2,700	26,300	(1,500)	25,300	(5,700)
	S/T	0.641	0.150	0.637	0	0.652	0
	Latent Btuh	15,600	15,300	15,000	14,100	13,500	12,400
	Lbs. H20/hr.	14.7	14.4	14.2	13.3	12.7	11.7
	Supply Air DB	55.9	72.8	56.8	77.0	57.5	81.2
	Supply Air WB	54.4	59.3	55.3	61.2	56.0	63.3
	Suction PSIG[3]	134	124	138	129	141	133
	Discharge PSIG[3]	327	281	373	311	422	343
75/66.7 (65% RH)	Total Cooling Btuh	44,600	19,100	42,300	13,700	39,800	7,900
	Sensible Btuh	26,100	1,800	24,600	(2,400)	23,500	(6,500)
	S/T	0.585	0.09	0.582	0	0.590	0
	Latent Btuh	18,500	17,300	17,700	16,100	16,300	14,400
	Lbs. H20/hr.	17.5	16.3	16.7	15.2	15.4	13.6
	Supply Air DB	57.2	73.8	58.1	77.9	58.8	82.1
	Supply Air WB	55.8	60.3	56.7	62.2	57.4	64.3
	Suction PSIG[3]	137	127	141	131	144	136
	Discharge PSIG[3]	329	284	375	314	424	346

[1] Values listed are with ventilation package disabled
[2] Return air temperature °F @ Default airflow (1300 CFM) for AC tests and Balanced Climate airflow (910 CFM) for dehumidification tests
[3] Suction pressure +/- 4 psi, Discharge pressure +/- 10 psi

Q48H4D Cooling and Dehumidification Application Data[1]

DB/WB[2]	OD Temp.	75°F		85°F		95°F	
	Mode	A/C	Dehum	A/C	Dehum	A/C	Dehum
75/64.1 (55% RH)	Total Cooling Btuh	48,900	18,500	46,200	12,600	43,400	6,400
	Sensible Btuh	33,900	3,700	32,600	(700)	31,400	(5,000)
	S/T	0.693	0.20	0.706	0	0.724	0
	Latent Btuh	15,000	14,800	13,600	13,300	12,000	11,400
	Lbs. H2O/hr.	14.2	14.0	12.8	12.5	11.3	10.8
	Supply Air DB	55.0	72.1	55.7	76.0	56.4	79.9
	Supply Air WB	53.3	58.4	53.9	60.3	54.6	62.3
	Suction PSIG[3]	129	119	132	122	135	124
	Discharge PSIG[3]	345	293	391	322	441	353
75/65.5 (60% RH)	Total Cooling Btuh	49,900	19,900	47,300	14,000	44,400	7,800
	Sensible Btuh	32,000	2,500	30,600	(1,800)	29,300	(6,200)
	S/T	0.641	0.126	0.647	0	0.660	0
	Latent Btuh	17,900	17,400	16,700	15,800	15,100	14,000
	Lbs. H2O/hr.	16.9	16.4	15.8	14.9	14.2	13.2
	Supply Air DB	56.2	73.1	56.9	77.1	57.6	81.0
	Supply Air WB	54.7	59.3	55.3	61.4	56.0	63.4
	Suction PSIG[3]	131	122	134	125	138	127
	Discharge PSIG[3]	347	297	394	326	444	357
75/66.7 (65% RH)	Total Cooling Btuh	50,900	21,300	48,300	15,500	45,500	9,300
	Sensible Btuh	29,900	1,400	28,600	(3,000)	27,300	(7,300)
	S/T	0.587	0.07	0.592	0	0.600	0
	Latent Btuh	21,000	19,900	19,700	18,500	18,200	16,600
	Lbs. H2O/hr.	19.8	18.8	18.6	17.5	17.2	15.7
	Supply Air DB	57.4	74.2	58.2	78.2	58.9	82.1
	Supply Air WB	56.1	60.4	56.8	62.5	57.5	64.4
	Suction PSIG[3]	134	125	137	128	141	131
	Discharge PSIG[3]	350	300	396	330	446	360

[1] Values listed are with ventilation package disabled

[2] Return air temperature °F @ Default airflow (1500 CFM) for AC tests and Balanced Climate airflow (1050 CFM) for dehumidification tests

[3] Suction pressure +/- 4 psi, Discharge pressure +/- 10 psi

TABLE 18
Dehumidification Relay Logic Board

Energize on Unit Terminal Strip	Mode	Occupied/ Unoccupied	Inputs to the Board							Outputs from the Board						
			RAT	Y	B	W2	A1	D	G	G1	BK	RV	TWV	W	YO	A2
Y1, G	1st Cooling	Unoccupied		X					X	X	X				X	
Y1, G, A	1st Cooling	Occupied		X			X		X	X	X				X	X
Y1, G, A, D	1st Cooling w/Dehum ①	Occupied		X			X	X	X	X	X				X	X
Y1, G, D	1st Cooling w/Dehum ①	Unoccupied		X				X	X	X	X				X	
Y1, G, B/W1	1st Heat Pump	Unoccupied		X	X				X	X	X	X			X	
Y1, G, B/W1, A	1st Heat Pump	Occupied		X	X		X		X	X	X	X			X	X
Y1, G, B/W1, A, D	1st Heat Pump w/Dehum ①	Occupied		X	X		X	X	X	X	X		X	X	X	X
Y1, G, B/W1, D	1st Heat Pump w/Dehum ①	Unoccupied		X	X			X	X	X	X	X			X	
Y1, G, B/W1, W2	2nd Heat Pump w/Strips	Unoccupied		X	X	X			X	X	X	X		X	X	
Y1, G, B/W1, W2, A	2nd Heat Pump w/Strips	Occupied		X	X	X	X		X	X	X	X		X	X	X
Y1, G, B/W1, W2, A, D	2nd Heat Pump w/Strips and Dehum ①	Occupied		X	X	X	X	X	X	X	X	X		X	X	X
Y1, G, B/W1, W2, D	2nd Heat Pump w/Strips and Dehum ①	Unoccupied		X	X	X		X	X	X	X	X		X	X	
D	Dehum	Unoccupied						X		X ②			X ②		X ②	
D, A	Dehum	Occupied					X	X		X			X		X	X

① Cooling takes precedence over dehumidification. A cooling call cancels dehumidification.

② The relay logic board has a jumper (J1) on it to choose between “any-time dehumidification” and “occupied dehumidification”. The factory default is P1-P2. With the jumper in the P1-P2 position, dehumidification is available any time there is a “D” input to the relay logic board. With the jumper in the P2-P3 position, dehumidification is available when there is an occupancy signal to the “A1” terminal, “D” would also need to be energized to dehumidify.

Refer to sequence of operation. In most cases cooling and heating modes take priority over dehumidification.

TABLE 19
Electrical Specifications – Q**H4D Series

Model	Rated Volts & Phase	No. Field Power Circuits	Single Circuit				Dual Circuit							
			① Minimum Circuit Ampacity	② Maximum External Fuse or Ckt. Brkr.	③ Field Power Wire Size	③ Ground Wire	① Minimum Circuit Ampacity		② Maximum External Fuse or Ckt. Breaker		③ Field Power Wire Size		③ Ground Wire Size	
							Ckt. A	Ckt. B	Ckt. A	Ckt. B	Ckt. A	Ckt. B	Ckt. A	Ckt. B
Q24H4DA0Z	230/208-1	1	24	35	8	10								
DA05		1	50	50	8	10								
Q24H4DB0Z	230/208-3	1	16	20	12	12								
DB06		1	34	35	8	10								
DB09		1	43	45	8	10								
Q24H4DC0Z	460-3	1	9	10	14	14								
DC06		1	18	20	12	12								
DC09		1	23	25	10	10								
Q30H4DA0Z	230/208-1	1	27	35	8	10								
DA05		1	53	60	6	10								
Q30H4DB0Z	230/208-3	1	20	25	10	10								
DB06		1	38	40	8	10								
DB09		1	48	50	8	10								
Q30H4DC0Z	460-3	1	10	15	14	14								
DC06		1	19	25	12	12								
DC09		1	24	25	10	10								
Q36H4DA0Z	230/208-1	1	27	40	8	10								
DA05		1	53	60	6	10								
DA10		1 or 2	79	80	4	8	53	26	60	30	6	10	10	10
Q36H4DB0Z	230/208-3	1	22	25	10	10								
DB06		1	40	45	8	10								
DB09		1	49	50	8	10								
④ DB15		1	52	60	6	10								
Q36H4DC0Z	460-3	1	12	15	14	14								
DC06		1	21	25	10	10								
DC09		1	25	30	10	10								
④ DC15		1	34	35	8	10								
Q43H4DA0Z	230/208-1	1	33	40	8	10								
DA05		1	59	60	6	10								
DA10		1 or 2	85	90	4	8	59	26	60	30	8	6	10	10
Q43H4DB0Z	230/208-3	1	26	30	10	10								
DB06		1	44	50	8	10								
DB09		1	53	60	6	10								
④ DB15		1	53	60	6	10								
Q43H4DC0Z	460-3	1	11	15	14	14								
DC06		1	20	20	12	12								
DC09		1	25	25	10	10								
④ DC15		1	26	30	10	10								
Q48H4DA0Z	230/208-1	1	35	40	8	10								
DA05		1	60	60	6	10								
DA10		1 or 2	87	90	3	8	35	52	40	60	8	6	10	10
④ DA15		1 or 2	87	90	3	8	35	52	40	60	8	6	10	10
Q48H4DB0Z	230/208-3	1	27	30	10	10								
DB06		1	45	50	8	10								
DB09		1	54	60	6	10								
④ DB15		1	54	60	6	10								
Q48H4DC0Z	460-3	1	12	15	14	14								
DC06		1	21	25	10	10								
DC09		1	25	25	10	10								
④ DC15		1	26	30	10	10								

① These "Minimum Circuit Ampacity" values are to be used for sizing the field power conductors. Refer to the National Electrical code (latest version), Article 310 for power conductor sizing. ***CAUTION:*** *When more than one field power circuit is run through one conduit, the conductors must be derated. Pay special attention to note 8 of Table 310 regarding Ampacity Adjustment Factors when more than three (3) current carrying conductors are in a raceway.*

② Maximum size of the time delay fuse or circuit breaker for protection of field wiring conductors.

③ Based on 75°copper wire. All wiring must conform to the National Electrical Code and all local codes.

④ Maximum KW that can operate with the heat pump on is 9KW. Full heat available during emergency heat mode.

NOTE: *The Maximum Overcurrent Protection (MOCP) value listed is the maximum value as per UL 1995 calculations for MOCP (branch-circuit conductor sizes in this chart are based on this MOCP). The actual factory-installed overcurrent protective device (circuit breaker) in this model may be lower than the maximum UL 1995 allowable MOCP value, but still above the UL 1995 minimum calculated value or Minimum Circuit Ampacity (MCA) listed.*

IMPORTANT: *While this electrical data is presented as a guide, it is important to electrically connect properly sized fuses and conductor wires in accordance with the National Electrical Code and all local codes.*