INSTALLATION INSTRUCTIONS

I-TEC® Series
Packaged Heat Pump

Models:

I36Z2-A	I42Z2-A	I48Z2-A	I60Z2-A
I36Z2-B	I42Z2-B	I48Z2-B	I60Z2-B
I36Z2-C	I42Z2-C	I48Z2-C	I60Z2-C

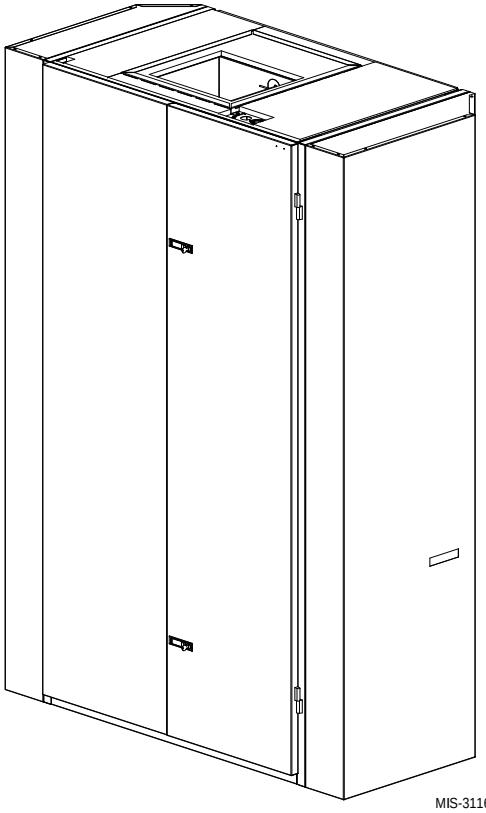

MIS-3116

Bard® SINCE 1914
Climate Control Solutions

Bard Manufacturing Company, Inc.
Bryan, Ohio 43506
www.bardhvac.com

Manual: 2100-770B
Supersedes: 2100-770A
Date: 8-14-23

CONTENTS

General Information 3
General 3
Additional Publications 3
I-TEC Model Nomenclature 5
Shipping Damage 8
Unit Removal from Skid 8
Handling Unit After Removal from Skid 9
Required Steps After Final Placement 9
Filters 10

Installation 11
Minimum Installation Clearances 11
Securing Unit to Structure 14
Seismic Considerations 14
Rubber Mat 14
Mounting the Unit 17
Duct Work 19
Condensate Drain 20
Wiring – Main Power 22
Wiring – Low Voltage 23
Low Voltage Connections 23
Variable Speed ECM Motor 24

Start Up 26
General 26
Topping Off System Charge 26
Safety Practices 26
Important Installer Note 26
Description of Standard Equipment 26
Solid State Electronic Heat Pump Control 26
High/Low Pressure Switch 27
Five Minute Compressor Time Delay 27
Condensate Overflow 27
Low Ambient Control 27
Phase Monitor 27
Three Phase Scroll Compressor Start Up Information .. 27
Service Hints 27
Sequence of Operation 27
Cooling Part Load 27
Cooling Full Load 27
Heating Stage 1 28
Heating Stage 2 28
Heating Stage 2 and Electric Heat (Up to 10KW) ... 28
Emergency Heat 28
Pressure Service Ports 28
Vent Connection Plug 28
Defrost Cycle 28
Low Pressure Switch Bypass Operation 29
High Pressure Switch Operation 29

Troubleshooting 30
Solid State Heat Pump Control 30
Checking Temperature Sensor 31
Troubleshooting Condensate Overflow Systems 32
Troubleshooting ECM™ 142R Outdoor Fan Motors 33
Troubleshooting Fan Logic Control 34
Replacing the Motor 34
Troubleshooting ECM™ Indoor Blower Motors 35
Replacing ECM Control Module 36
Fan Blade Setting Dimensions 38
Refrigerant Charge 38

Figures

Figure 1 Unit Dimensions 7
Figure 2 Center of Gravity 8
Figure 3A Unit on Lift 9
Figure 3B Unit Side 9
Figure 4 Compressor Shipping Bolts 10
Figure 5 Filter Location 10
Figure 6 Removal of Air Duct 11
Figure 7A Ducted Application 11
Figure 7B 3" Riser Application 12
Figure 7C 6" Riser Application 12
Figure 7D Required Clearances and Recommended Access 13
Figure 8 Wall Mounting Bracket 14
Figure 9 Wall Section View 15
Figure 10 Wood Framed Installation 16
Figure 11A Unit Mounting 17
Figure 11B Unit Mounting 18
Figure 12 Supply Duct Connections 19
Figure 13 Drain Locations 21
Figure 14 Component Location 22
Figure 15 Basic Heat Pump w/No Vent Package Thermostat Connections. 25
Figure 16 Heat Pump Control Defrost Cycle 29
Figure 17 Indoor Condensate Overflow Switch 32
Figure 18 Outdoor Condensate Sensor 32
Figure 19 Outdoor Condensate Control 32
Figure 20 Control Disassembly 36
Figure 21 Winding Test 36
Figure 22 Drip Loop 36
Figure 23 Control Connector Motor Half 37
Figure 24 Fan Blade Position 38

Tables

Table 1 Factory Built-In Electric Heat Table 5
Table 2 Indoor Blower Performance 5
Table 3 Electrical Specifications 6
Table 4 Operating Voltage Range 23
Table 5 Wall Thermostats 23
Table 6 CO_2 Controller 23
Table 7 Low Voltage Connections for DDC Control 24
Table 8 Troubleshooting 30
Table 9 Temperature (F) vs. Resistance (R) of Temperature Sensor 31
Table 10 Troubleshooting ECM™ 142R Outdoor Fan Motors 34
Table 11 Cooling Mode 34
Table 12 Heat Pump Mode 34
Table 13 Troubleshooting ECM™ Indoor Blower Motors 37
Table 14A Cooling Pressures – Rated Airflow 39
Table 14B Heating Pressures – Rated Airflow 39
Table 15A Cooling Pressures – Part Load Airflow 40
Table 15B Heating Pressures – Part Load Airflow 40

General

The equipment covered in this manual is to be installed by trained, experienced service and installation technicians.

> ***The I-TEC must be installed with the Bard manufactured IZWS wall sleeve and ILG louver grille accessories. These are sold as separate accessories. Any substitutions will void the manufacturer's warranty.***

The unit is designed for use with or without ductwork. For use without ductwork, Plenum Box IPBDFZ18-color (18" height) or IPBDFZ12-color (12" height) is recommended.

These instructions explain the recommended method to install the air cooled self-contained unit and the electrical connections to it.

These instructions and any instructions packaged with any separate equipment required to make up the entire heating and air conditioning system should be carefully read before beginning the installation. Note particularly "Start Procedure" and any tags and/or labels attached to the equipment.

While these instructions are intended as a general recommended guide, they do not supersede any national and/or local codes in any way. Authorities having jurisdiction should be consulted before the installation is made. See **Additional Publications** for information on codes and standards.

Size of unit for a proposed installation should be based on heat loss or heat gain calculation made according to methods of Air Conditioning Contractors of America (ACCA). The air duct should be installed in accordance with the Standards of the National Fire Protection Systems of Other Than Residence Type, NFPA No. 90A and Residence Type Warm Air Heating and Air Conditioning Systems, NFPA No. 90B. Where local regulations are at a variance with instructions, installer should adhere to local codes.

Additional Publications

These publications can help when installing the air conditioner or heat pump. They can usually be found at the local library or purchase them directly from the publisher. Be sure to consult current edition of each standard.

National Electrical Code ..... ANSI/NFPA 70

Standard for the Installation of Air Conditioning and Ventilating Systems
..... ANSI/NFPA 90A

Standard for Warm Air Heating and Air Conditioning Systems
..... ANSI/NFPA 90B

Load Calculation for Winter and Summer Air Conditioning ..... ACCA Manual J or Manual N

Low Pressure, Low Velocity Duct System Design Winter and Summer Air Conditioning
..... ACCA Manual D or Manual Q

For more information, contact these publishers:

ACCA **Air Conditioning Contractors of America**
1712 New Hampshire Avenue
Washington, DC 20009
Telephone: (202) 483-9370
Fax: (202) 234-4721

ANSI **American National Standards Institute**
11 West Street, 13th Floor
New York, NY 10036
Telephone: (212) 642-4900
Fax: (212) 302-1286

ASHRAE **American Society of Heating, Refrigeration, and Air Conditioning Engineers, Inc.**
1791 Tullie Circle, N.E.
Atlanta, GA 30329-2305
Telephone: (404) 636-8400
Fax: (404) 321-5478

NFPA **National Fire Protection Association**
Batterymarch Park
P.O. Box 9101
Quincy, MA 02269-9901
Telephone: (800) 344-3555
Fax: (617) 984-7057

ANSI Z535.5 Definitions:

• **DANGER:** Indicate[s] a hazardous situation which, if not avoided, will result in death or serious injury. The signal word "DANGER" is to be limited to the most extreme situations. DANGER [signs] should not be used for property damage hazards unless personal injury risk appropriate to these levels is also involved.

• **WARNING:** Indicate[s] a hazardous situation which, if not avoided, could result in death or serious injury. WARNING [signs] should not be used for property damage hazards unless personal injury risk appropriate to this level is also involved.

• **CAUTION:** Indicate[s] a hazardous situation which, if not avoided, could result in minor or moderate injury. CAUTION [signs] without a safety alert symbol may be used to alert against unsafe practices that can result in property damage only.

• **NOTICE:** [this header is] preferred to address practices not related to personal injury. The safety alert symbol shall not be used with this signal word. As an alternative to "NOTICE" the word "CAUTION" without the safety alert symbol may be used to indicate a message not related to personal injury.

DANGER

WARNING

CAUTION

NOTICE

⚠ WARNING

Electrical shock hazard.

Have a properly trained individual perform these tasks.

Failure to do so could result in electric shock or death.

⚠ WARNING

Electrical shock hazard.

Do not operate this equipment without an earth ground attached and always disconnect the remote electric power supplies before servicing.

Electrical shock can result in serious injury or death.

⚠ WARNING

Fire hazard.

Maintain minimum 1/4" clearance between the supply air duct and combustible materials in the first 3' feet of ducting.

Failure to do so could result in fire causing damage, injury or death.

⚠ WARNING

Heavy item hazard.

Use more than one person to handle unit.

Failure to do so could result in unit damage or serious injury.

⚠ CAUTION

Sharp metallic edges.

Take care and wear appropriate protective devices to avoid accidental contact with sharp edges.

Failure to do so can result in personal injury.

I-TEC Model Nomenclature Z-Version 2-Stage Air Source Heat Pumps

I 36 Z 2 – A 0Z V P 1 X X X

MODEL SERIES

NOMINAL CAPACITY
36 – 3 Ton
42 – 3-1/2 Ton
48 – 4 Ton
60 – 5 Ton

SYSTEM TYPE
H/P CA Design

REVISION

SPECIAL UNITS
(–) – Standard

VOLTS & PHASE
A – 230/208-60-1
B – 230/208-60-3
C – 460-60-3

KW
(see Table 3 on page 6)

VENTILATION OPTIONS
B – Blank-Off Plate
V – Variable Speed CRV
Y – Economizer - Temp
Z – Economizer - Enthalpy
D – Economizer - No Control

COLOR OPTIONS
X – Beige paint
1 – White paint
4 – Gray paint

FILTER OPTIONS
P – 2" Pleated MERV 8
M – 2" Pleated MERV 11
N – 2" Pleated MERV 13
A – UV-C + 2" Pleated MERV 13
B – NPBI TECH + 2" Pleated MERV 13

VINYL GRAPHICS OPTIONS
X – None
A – Stacked Books

COIL TREATMENT
X – Std. Hydrophilic Fin Evap. & Uncoated Alum. Cond. Coil
1 – Phenolic Coated ID Coil
2 – Phenolic Coated OD Coil
3 – Phenolic Coated ID & OD Coil

CONTROLS
X – No Control

TABLE 1
Factory Built-In Electric Heat

Models	240V-1		208V-1		240V-3		208V-3		480V-3		460V-3	
KW	Amps	BTUH	Amps	BTUH	Amps	BTUH	Amps	BTUH	Amps	BTUH	Amps	BTUH
4	16.7	13,700	14.4	10,200	--	--	--	--	--	--	--	--
5	20.8	17,100	18.0	12,800	--	--	--	--	--	--	--	--
6	--	--	--	--	14.4	20,500	12.5	15,400	7.2	20,500	6.9	18,800
9	--	--	--	--	21.7	30,700	18.7	23,000	10.8	30,700	10.4	28,300
10	41.7	34,100	36.1	25,600	--	--	--	--	--	--	--	--
15	62.5	51,200	54.1	38,400	36.1	51,200	31.2	38,400	18.0	51,200	17.3	47,100
18	--	--	--	--	43.3	61,400	37.5	46,100	21.7	61,400	20.8	56,500
20	83.3	68,300	72.1	51,200	--	--	--	--	--	--	--	--

TABLE 2
Indoor Blower Performance ①

Model	Rated ESP	Max. ESP	Continuous CFM ②	Rated 2nd Stage CFM	Rated 1st Stage CFM	4-10KW CFM ③	15-20KW CFM ④
I36Z2	.15	0.50	600	1150	850	700	1050
I42Z2	.15	0.50	650	1300	950	700	1050
I48Z2	.20	0.50	700	1400	1050	700	1400
I60Z2	.20	0.50	800	1600	1100	700	1400

① Motor will deliver consistent CFM through voltage supply range with no deterioration.
② Continuous fan CFM is the total air being circulated during continuous fan mode.
③ Will operate at rated Full Load Airflow when operating with heat pump.
④ Will occur automatically with a call for "W3" or "Emergency Heat" signal from the thermostat (heat pump operation is terminated at this condition).

TABLE 3
Electrical Specifications

Model	Rated Volts, Hertz & Phase	Single Circuit					Multiple Circuit							
		No. Field Power Circuits	Minimum Circuit Ampacity	Maximum External Fuse or Ckt. Brkr.	Field Power Wire Size	Ground Wire	Minimum Circuit Ampacity		Maximum External Fuse or Ckt. Breaker		Field Power Wire Size		Ground Wire Size	
							Ckt. A	Ckt. B	Ckt. A	Ckt. B	Ckt. A	Ckt. B	Ckt. A	Ckt. B
I36Z2-A0Z	240/208-60-1	1	25	30	10	10								
A05		1	51	60	6	10								
A10		1 or 2	77	80	4	8	25	52	30	60	10	6	10	10
① A15		1 or 2	84	90	4	8	32	52	35	60	8	6	10	10
I36Z2-B0Z	240/208-60-3	1	19	25	12	10								
B06		1	37	40	8	10								
B09		1	46	50	8	10								
① B15		1	51	60	6	10								
I36Z2-C0C	480-60-3	1	11	15	14	14								
C0Z		1	11	15	14	14								
C06		1	20	20	14	12								
C09		1	25	25	12	10								
① C15		1	27	30	10	10								
I42Z2-A0Z	240/208-60-1	1	30	35	8	10								
A05		1	56	60	6	10								
A10		1 or 2	82	90	4	8	30	52	35	60	8	6	10	10
① A15		1 or 2	85	90	4	8	33	52	35	60	8	6	10	10
I42Z2-B0Z	240/208-60-3	1	25	30	10	10								
B06		1	43	45	8	10								
B09		1	52	60	6	10								
① B15		1	52	60	6	10								
I42Z2-C0C	480-60-3	1	13	15	14	14								
C0Z		1	13	15	14	14								
C06		1	22	25	12	10								
C09		1	26	30	10	10								
① C15		1	27	30	10	10								
I48Z1-A0Z	240/208-60-1	1	35	40	8	10								
A04		1	56	60	6	10								
A05		1 or 2	61	70	6	8	35	26	40	30	8	10	10	10
A10		1 or 2	87	90	3	8	35	52	40	60	8	6	10	10
① A15		1 or 2	87	90	3	8	35	52	40	60	8	6	10	10
① A20		1 or 2	111	125	2	6	59	52	60	60	6	6	10	10
I48Z1-B0Z	240/208-60-3	1	27	30	10	10								
B06		1	45	45	8	10								
B09		1	54	60	6	10								
① B15		1	54	60	6	10								
① B18		2	N/A	N/A	N/A	N/A	34	28	35	30	8	10	10	10
I48Z1-C0C	480-60-3	1	15	20	14	12								
C0Z		1	15	20	14	12								
C06		1	24	25	12	10								
C09		1	29	30	10	10								
① C15		1	29	30	10	10								
① C18		1	34	35	8	10								
I60Z1-A0Z	240/208-60-1	1	41	50	8	10								
A05		1 or 2	67	70	4	8	41	26	50	30	8	10	10	10
A10		1 or 2	93	100	3	8	41	52	50	60	8	6	10	10
① A15		1 or 2	93	100	3	8	41	52	50	60	8	6	10	10
① A20		1 or 2	112	125	2	6	60	52	60	60	6	6	10	10
I60Z1-B0Z	240/208-60-3	1	30	35	8	10								
B06		1	48	50	8	10								
B09		1	57	60	6	10								
① B15		1	57	60	6	10								
① B18		2	N/A	N/A	N/A	N/A	35	28	35	30	8	10	10	10
I60Z1-C0C	480-60-3	1	16	20	14	12								
C0Z		1	16	20	14	12								
C06		1	25	25	12	10								
C09		1	29	30	10	10								
① C15		1	29	30	10	10								
① C18		1	34	35	8	10								

These "Minimum Circuit Ampacity" values are to be used for sizing the field power conductors. Refer to the National Electric Code (latest revision), Article 310 for power conductor sizing.

CAUTION: When more than one field power conductor circuit is run through one conduit, the conductors must be derated. Pay special attention to Note 8 of Table 310 regarding Ampacity Adjustment Factors when more than three (3) current carrying conductors are in a raceway.

Maximum size of the time delay fuse or circuit breaker for protection of field wiring conductors.

Based on 75°C copper wire. All wiring must conform to the National Electrical Code and all local codes.

Maximum KW that can operate with the heat pump is 10KW for 1-Phase and 9KW for 3-Phase.

① Represents Electric Heat only. Electric Control Circuit will lock-out Heat Pump Operation.

FIGURE 1 – Unit Dimensions

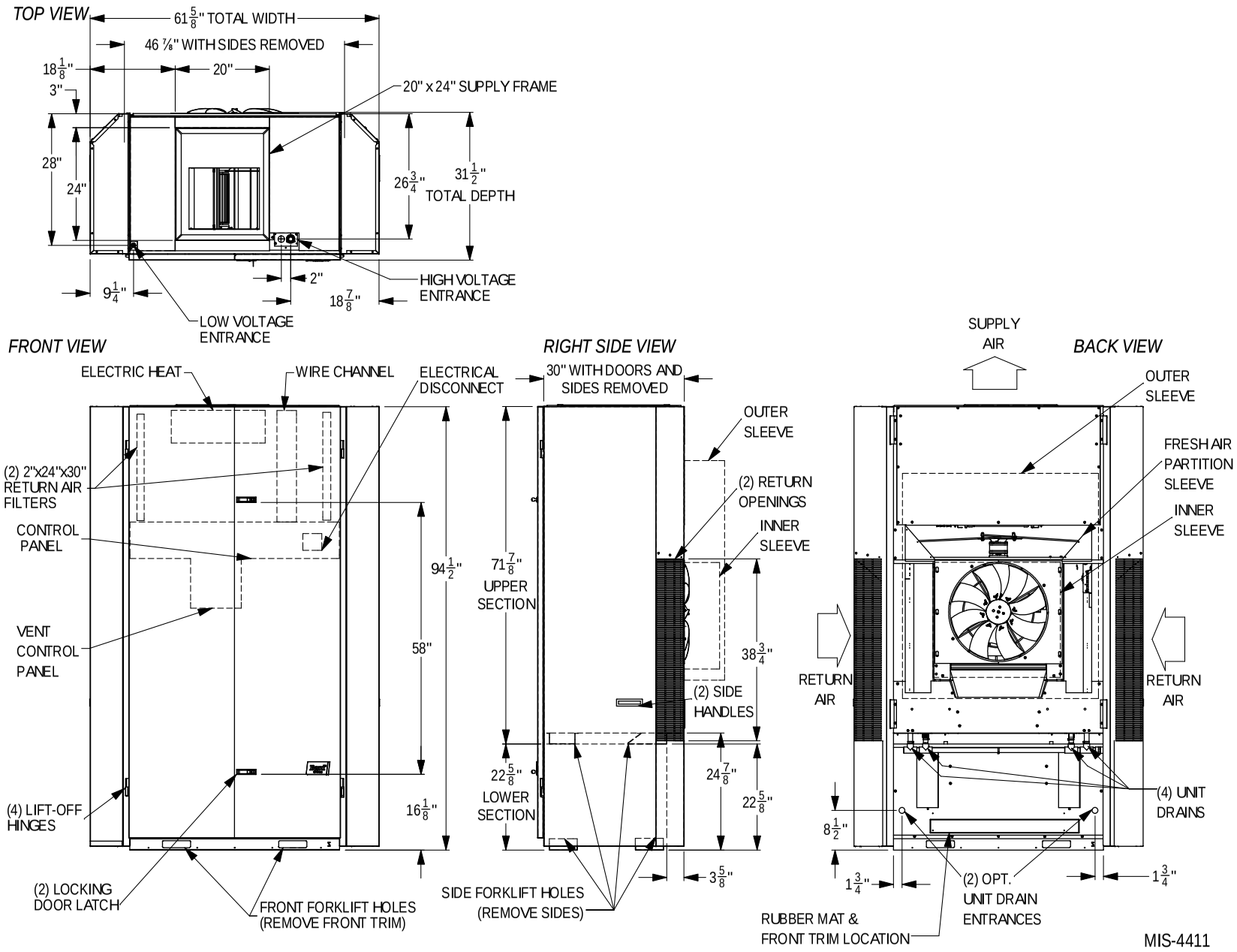

FIGURE 2
Center of Gravity

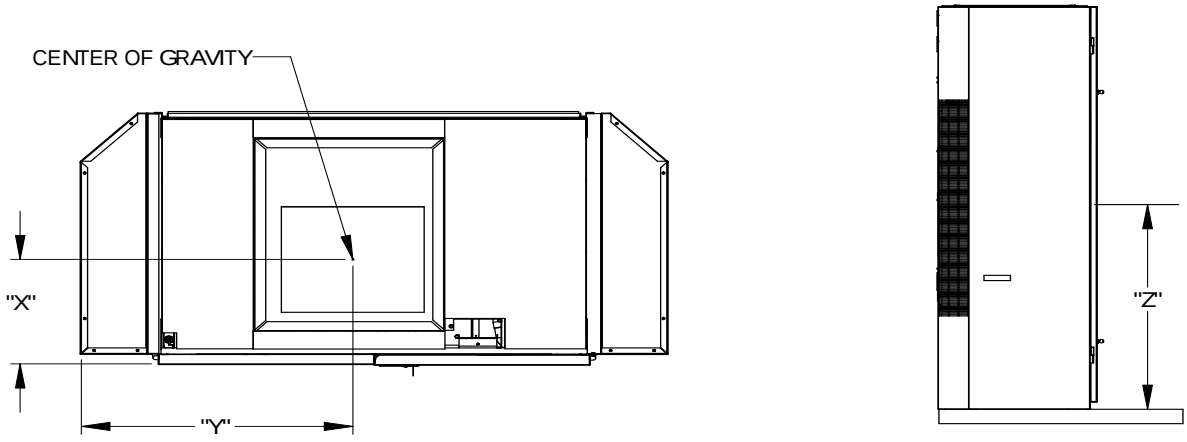

MIS-3268

Unit Tested	Front of Unit Door to Center	Left Side to Center	Floor to Center CRV & ERV	Floor to Center No Vent
	"X" Dimension	"Y" Dimension	"Z" Dimension	"Z" Dimension
I36Z2-A, B	13½"	31"	43½"	47"
I36Z2-C	13½"	31½"	43½"	47"
I42Z2-A, B	13½"	31"	43½"	47"
I42Z2-C	13½"	31½"	43½"	47"
I48Z2-A, B	13½"	31"	43½"	47"
I48Z2-C	13½"	31½"	43½"	47"
I60Z2-A, B	13½"	31"	43½"	47"
I60Z1-C	13½"	31½"	43½"	47"

Shipping Damage

Upon receipt of equipment, the unit should be checked for external signs of shipping damage. The skid must remain attached until the unit is ready for installation. If damage is found, the receiving party must contact the last carrier immediately, preferably in writing, requesting inspection by the carrier's agent.

Unit Removal from Skid

A forklift or a lift rated for the load (Figure 3A) is required to lift the unit off from the skid. This unit is top heavy and should never be tipped while moving it.

The I-TEC is designed to be lifted off the skid from the front or rear of the unit without having to remove any doors or side panels. See Figure 1 for fork openings. The shipping brackets on front and rear of the unit must be removed and discarded. The unit can now be lifted straight up and the skid can be slid out from underneath.

⚠ WARNING

This unit is heavy and requires more than one person to handle during installation and removal from the skid. Extreme caution must be taken to prevent injury to personnel and damage to the unit. Use appropriate safety equipment, including gloves when handling. Failure to do so may result in serious injury.

⚠ CAUTION

Tip unit from left side only.

Failure to do so may result in injury due to unit top-heaviness or compressor damage!

Handling Unit after Removal from Skid

If a wide and tall opening exists, the I-TEC can be moved as a complete assembled unit. If not, use the following directions for disassembly to allow it to pass through a 36" wide door.

1. Depress and release both top and bottom door latches and open doors.
2. Remove doors by lifting straight up and off from the hinge pins.
3. Remove cabinet sides by first removing the four (4) sheet metal screws from the front (leading edge) of the side panel. The panel will not fall off. Swing the panel away from the chassis 20-30˚ and then pull forward from the two tabs supporting the rear edge. At this point, the unit can be tipped on its left side enough to get dolly carts under it. Use dolly carts to move unit into installation area. Use care not to damage vent wire harness. This method is not suggested due to unit weight and if a forklift or unit lift is available, continue with the following steps for separation of top section and bottom base.

FIGURE 3A
Unit on Lift

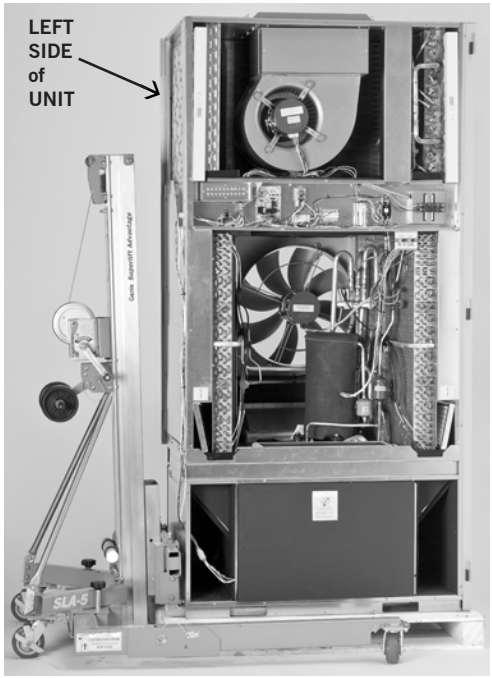

4. On each side of the unit is a tie plate that secures the top and bottom sections with four (4) cap bolts. Using a ½" wrench or socket, remove these screws from both plates and set aside.
5. If the unit is equipped with a CRV, unplug the wire harness on the left-hand side of the control box.
6. **A forklift or a lift rated for the load is required to lift the top section off from the bottom base. Do not attempt to do this manually! Failure to do so could result in the unit tipping over and causing bodily injury and/or damage to the unit.**
7. The top section can be forked from either the right-hand or left-hand side. See Figure 1 for fork openings.
8. Carefully lift the top section straight up avoiding tipping.
9. Move the top section through the doorway and place on flat surface free of debris.
10. The bottom base can now be moved through the doorway the same way.
11. Reassemble the unit by reversing this procedure.

FIGURE 3B
Unit Side

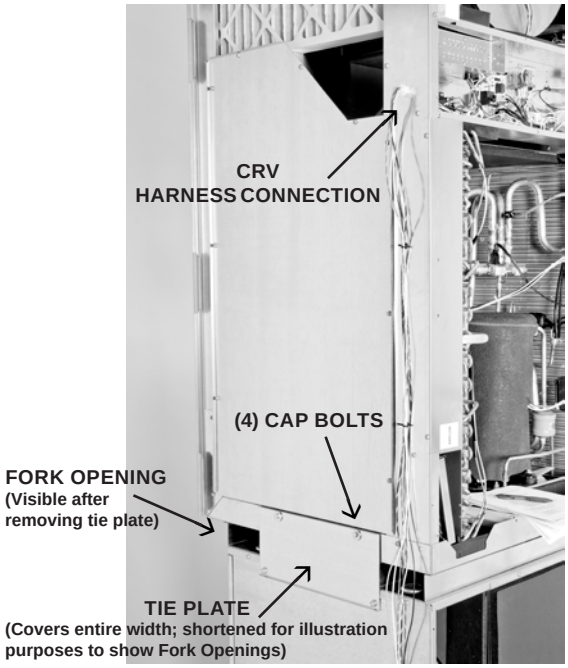

Required Steps after Final Placement

The compressor is secured to the base with two (2) bolts for shipping. Although the unit will perform as designed with the shipping bolts in place, there may be noticeable additional noise and vibration noted. To obtain the lowest noise and vibration levels, remove the shipping bolts after the unit is in its final operating location (see Figure 4 on page 10). To gain access to the compressor, the compressor access panel must be removed (shown in Figure 5 on page 10).

FIGURE 4
Compressor Shipping Bolts

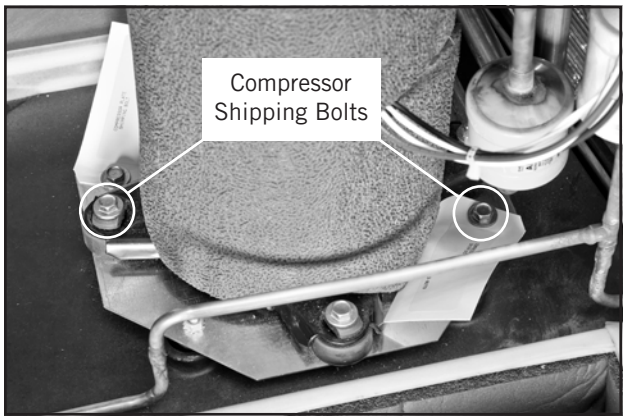

Filters

Two 2" throw away filters (24 x 30) and two 1" throw away filters (16 x 25) are supplied with each unit. The 2" filters slide into brackets on both sides for the return air openings. The filters are serviced from the inside of the building by opening the cabinet doors and do not require any tools to access.

FIGURE 5
Filter Location

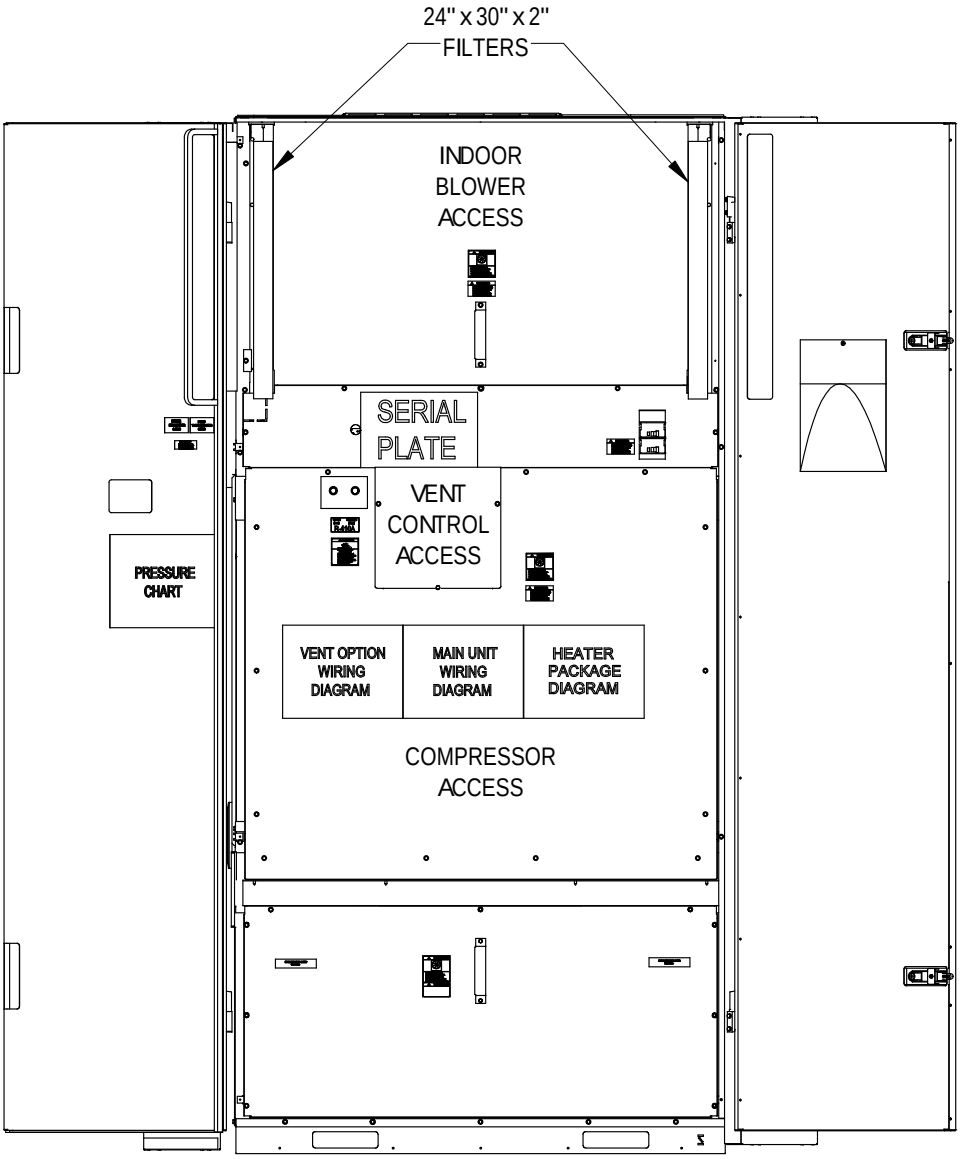

MIS-4393

Minimum Installation Clearances

The minimum installation height to the bottom of the roof or fixed ceiling for ducted applications is 9' 7". This provides enough clearance to install the duct work. See Figure 7A.

The IZWS Series wall sleeve has a built-in vertical adjustment to fit window sill heights from 29-1/2" to 31-1/2". If additional height from 31-1/2" to 34-1/2" is required, the vent blank-off plate or two riser platform accessories are available. The IRZ3 increases the unit height by 3" (Figure 7B on page 12) and the IRZ6 by 6" (Figure 7C on page 12). The vent blank-off plate is not recommended for units with a ventilation option because of the reduction of exhaust air amount and increase in sound levels (see Figure 6).

Several construction options are available for unit installation of the IZ Series. Serviceability and filter access must be considered before installing. See Figure 7D on page 13 for required clearances and recommended service access dimensions.

FIGURE 6
Blank-Off Plate Install

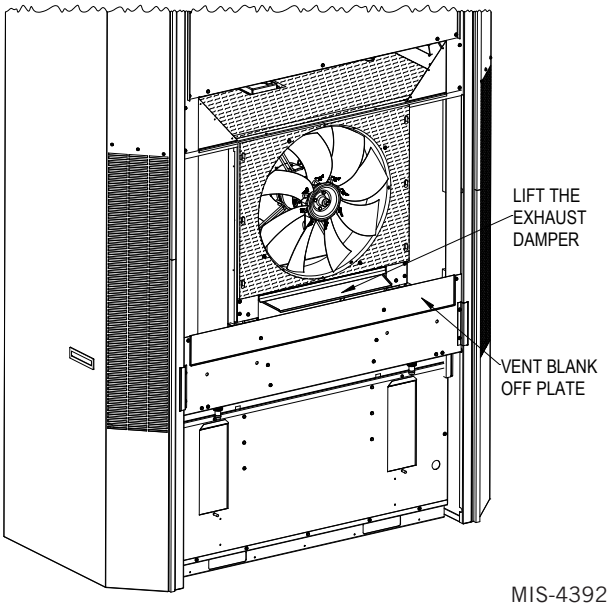

MIS-4392

FIGURE 7A
Ducted Application – Basic Unit

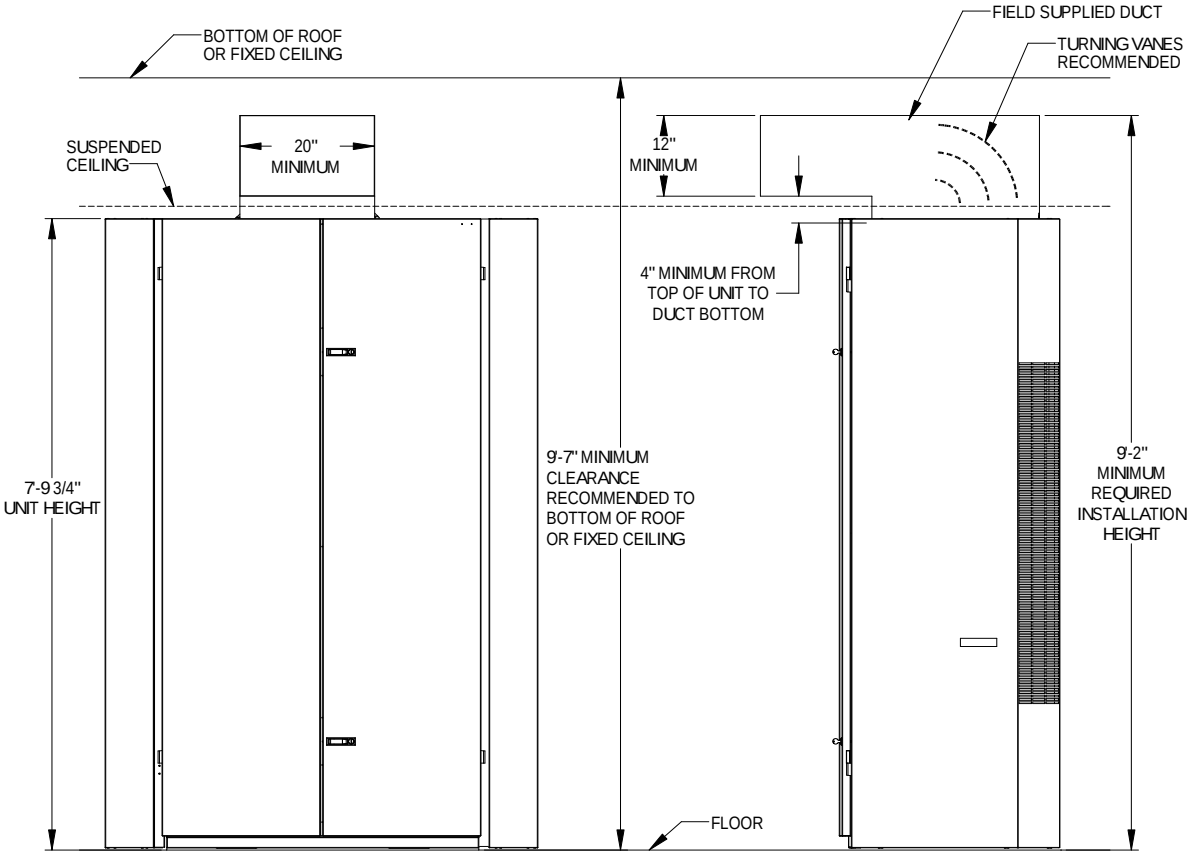

MIS-3198

FIGURE 7B
3" Riser Application

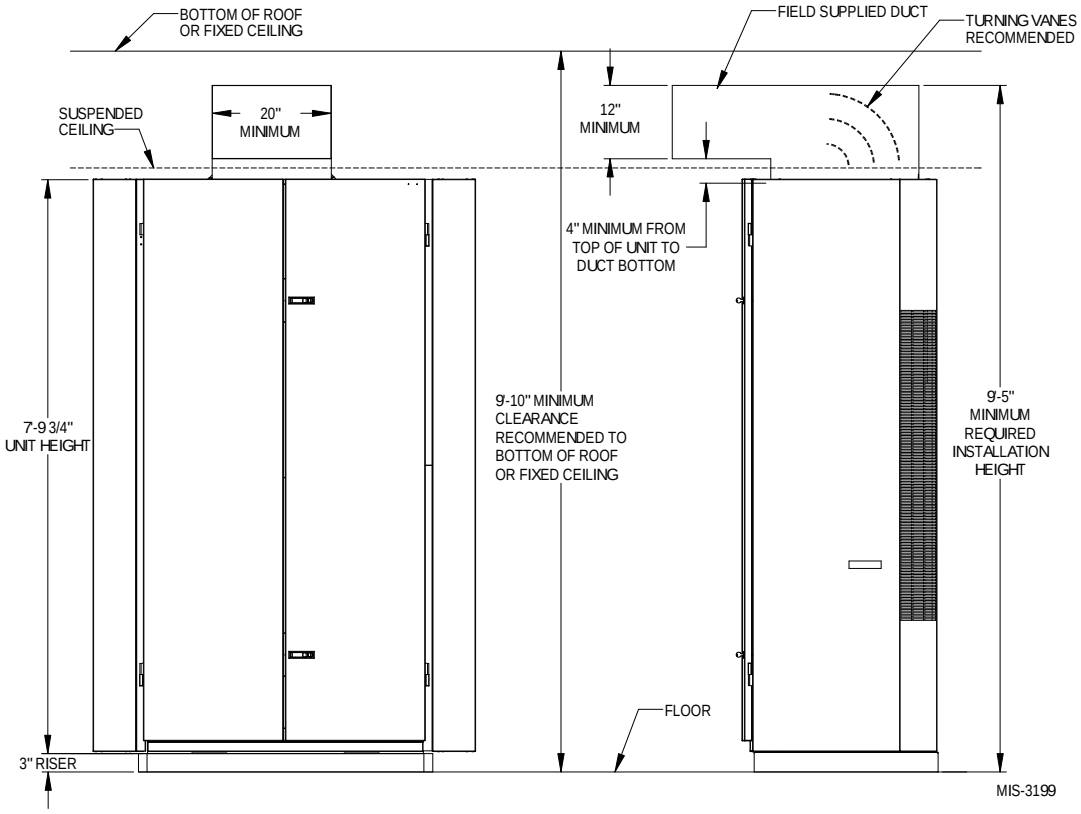

FIGURE 7C
6" Riser Application

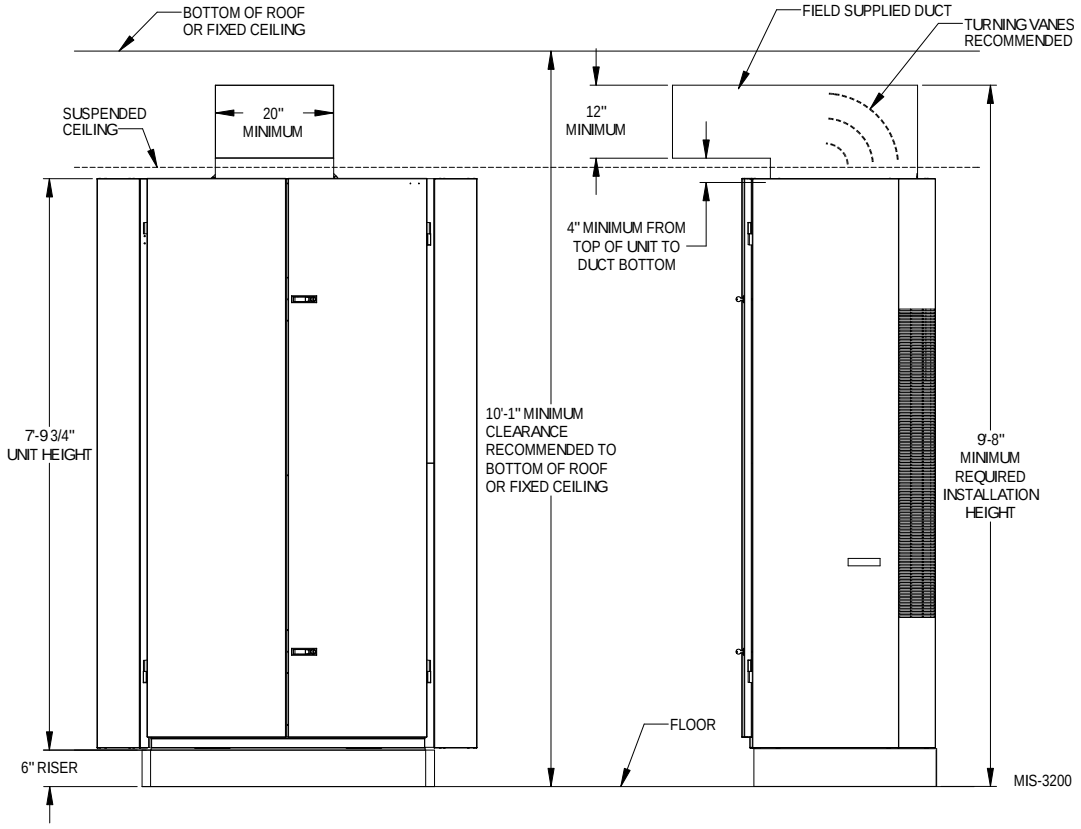

FIGURE 7D
Required Clearances and Recommended Access

WING WALL CONSTRUCTION TOP VIEW

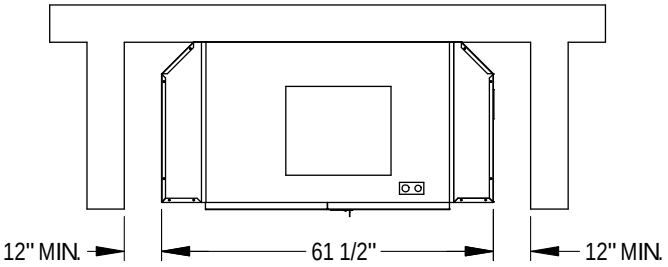

CLOSET CONSTRUCTION TOP VIEW

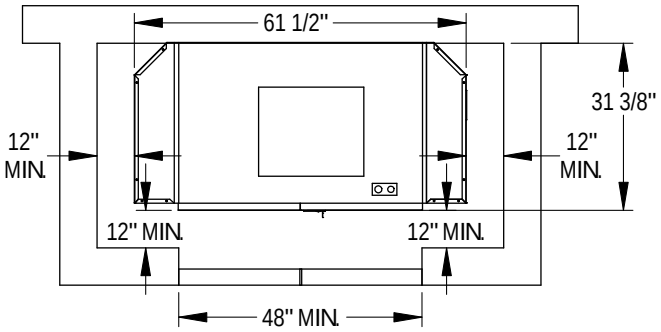

RECOMMENDED SERVICE ACCESS DIMENSIONS

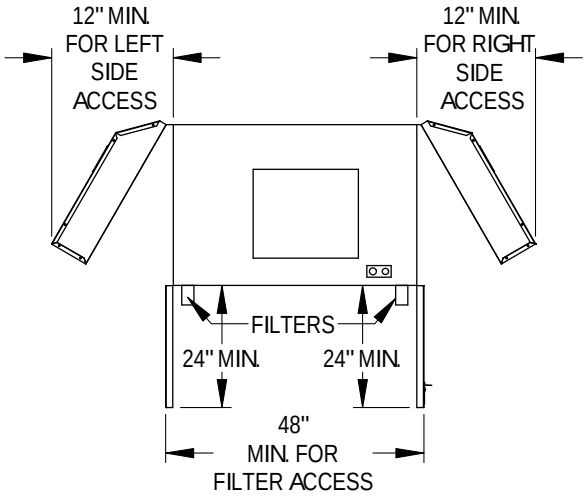

LEFT CORNER CONSTRUCTION TOP VIEW

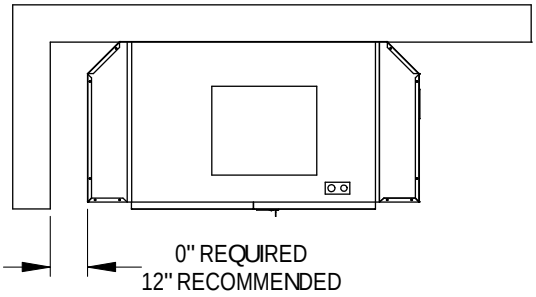

RIGHT CORNER CONSTRUCTION TOP VIEW

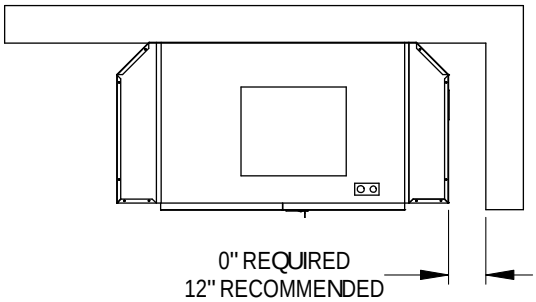

IMPORTANT: *Unit can be located in corner with 0" clearance as long as other side is unobstructed.*

NOTE: *Economizer functionality will be compromised if reduced to 0" clearance.*

MIS-3230

Securing Unit to Structure

Shipped with the I-TEC unit is a wall-mounting bracket (screwed to shipping skid on backside of unit). This bracket can be utilized to secure the top portion of the unit to the wall using the appropriate field-supplied hardware based upon the material being fastened to. There are several offset holes, sized to accept up to a 1/4" diameter fastener, that will easily allow studs to be hit on a framed wall (see Figure 8). See Figure 9 for locating this top wall bracket which will need to be applied after the unit is located in the final position.

Additional/optional mounting holes for up to a 3/8" diameter fastener are also available in the backside and base of the unit. These can be accessed by:

- Removing the air filters (uppermost set)
- Removing the compressor section service door (lower set)
- Removing vent door and vent partitions (base set)

Refer to Figure 10 on page 16 for additional framing required to secure unit to wall.

The additional/optional mounting holes will require a long extension to drive the fasteners.

Seismic Considerations

The I-TEC product features several locations for product securement but all site conditions are different. Consult with a licensed Seismic Engineer to advise of particular needs when attaching the I-TEC unit to the structure.

Rubber Mat

Unit rests on rubber mat placed under base rails during installation. Place mat on floor flush with wall and centered over wall opening.

FIGURE 8
Wall Mounting Bracket

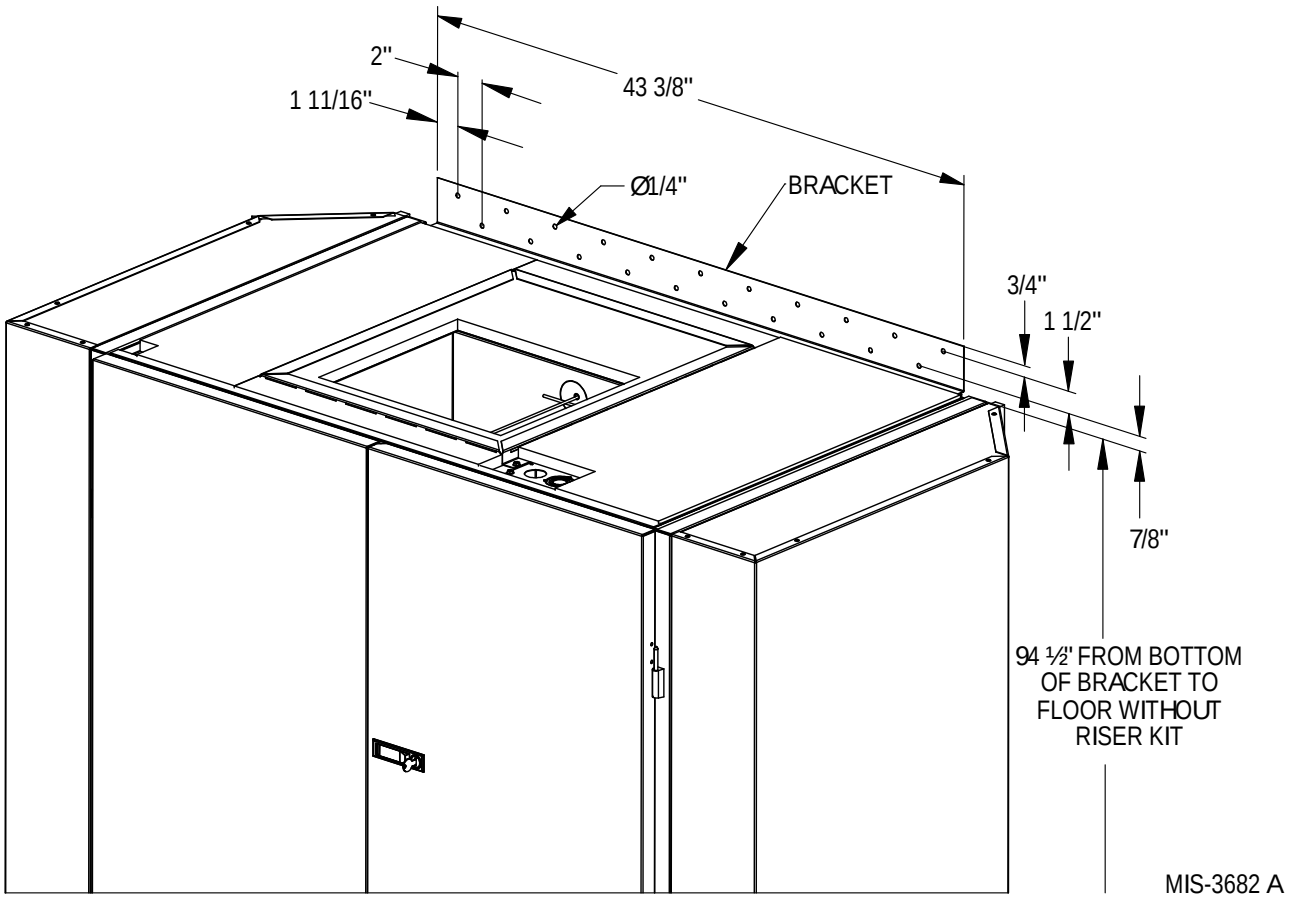

FIGURE 9
Wall Section View

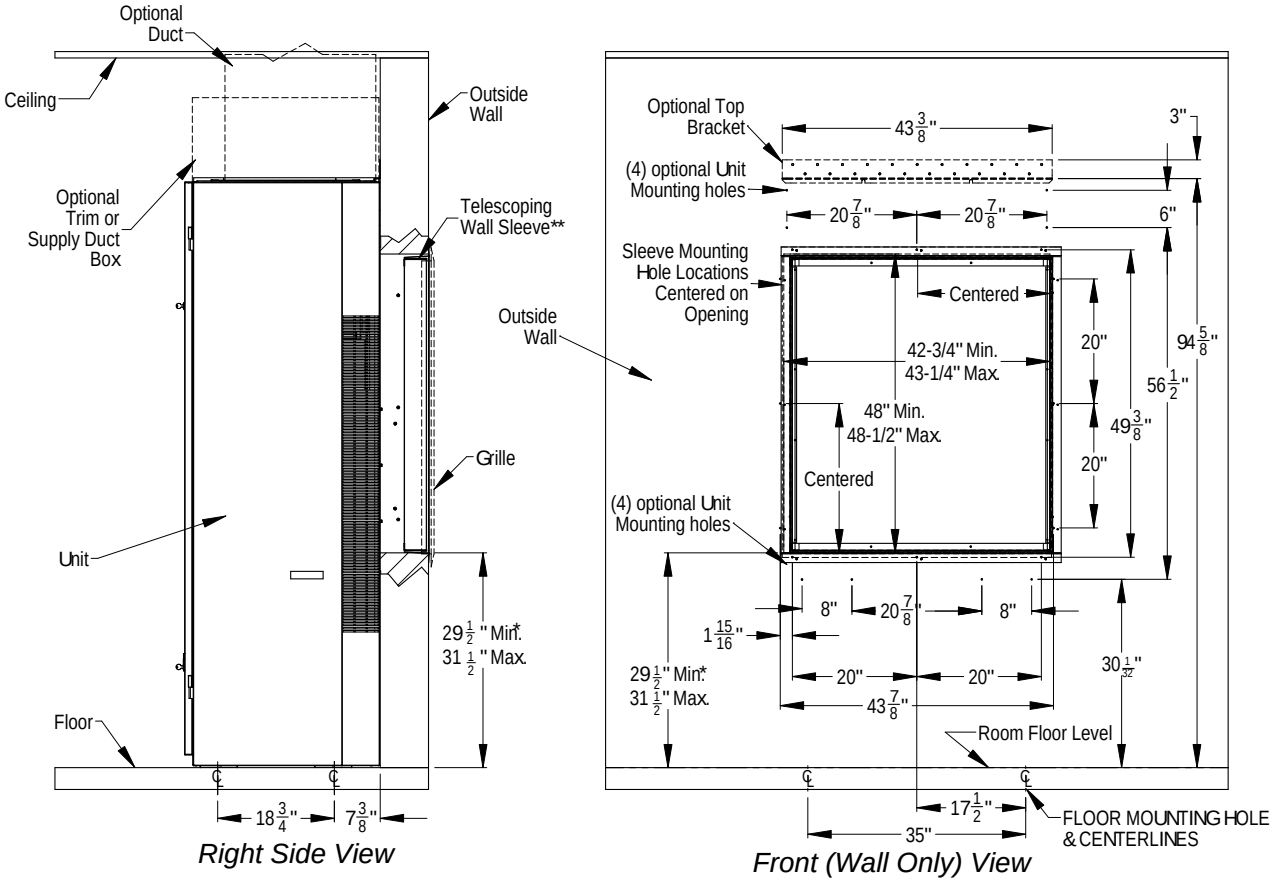

* Higher Sill Heights Acheivable With Base Kit.
** Separate telescoping sleeves available for different wall thicknesses.

MIS-3196 C

FIGURE 10
Wood Framed Installation (for Wall Attachment)

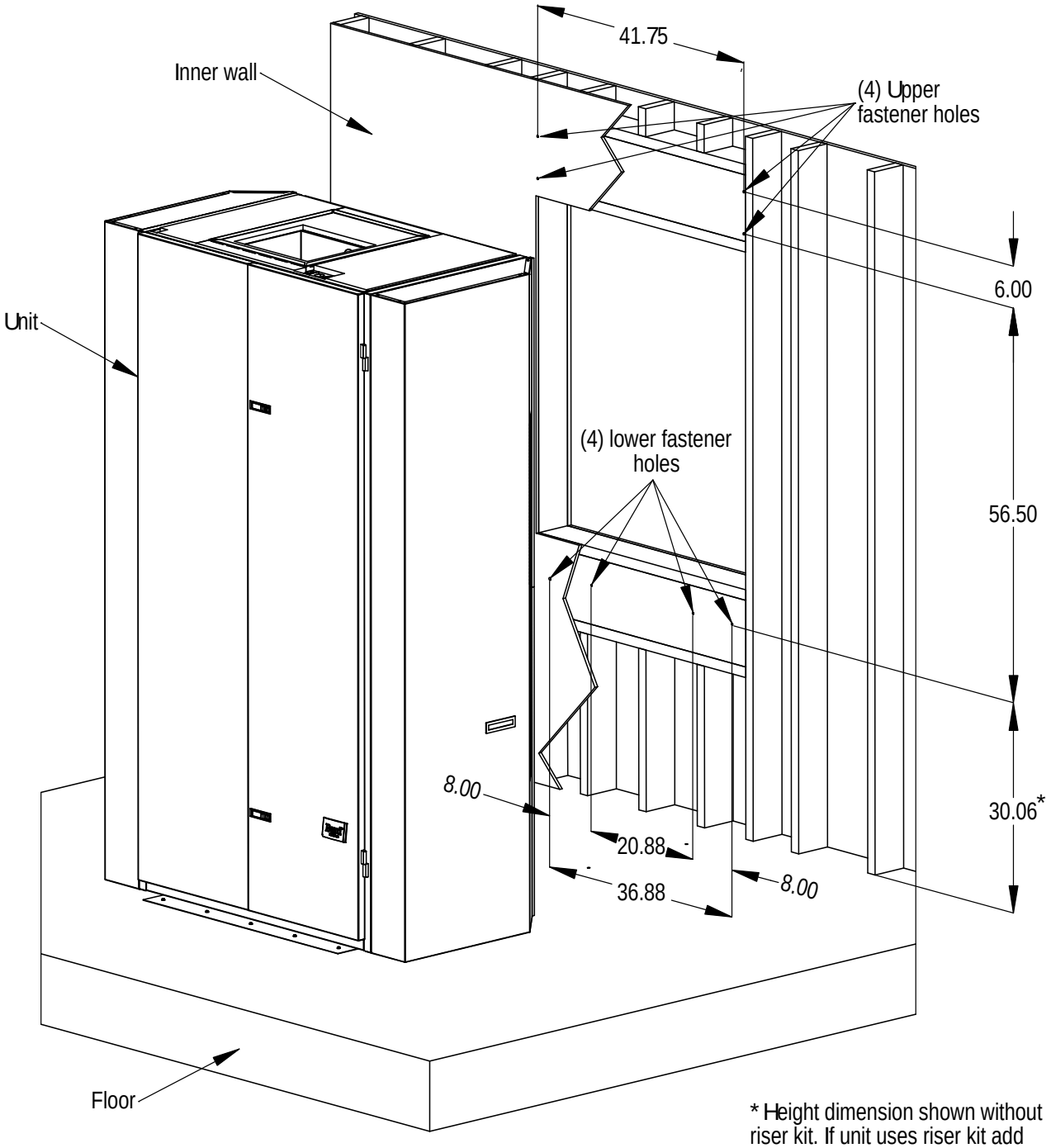

* Height dimension shown without riser kit. If unit uses riser kit add appropriate dimension to height.

MIS-3197 A

Mounting the Unit

The wall sleeve is attached to the I-TEC unit from the outside of the building. See Figure 11A (below) and Figure 11B (page 18). Refer to latest version of wall sleeve manual 2100-562 supplied with sleeve for additional information.

Following are the steps for attaching the I-TEC to the wall sleeve.

1. Lift the unit into place making sure that it is aligned side-to-side. Align unit with rubber mat.
2. Push the unit back until the rear panel touches the sleeve gasket.

FIGURE 11A
Unit Mounting

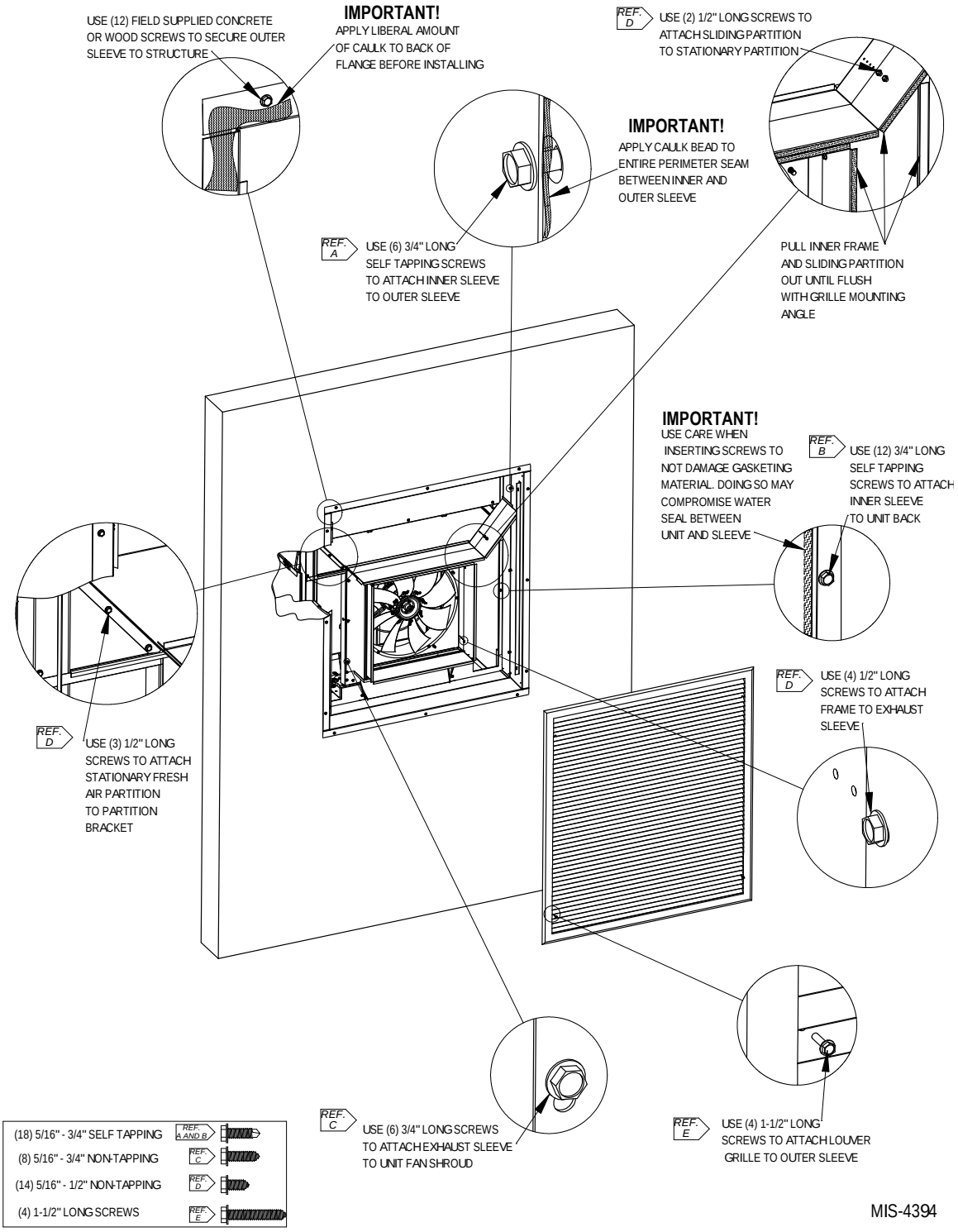

3. This unit must be level from side-to-side and from front-to-back. If adjustments are necessary, shim up under the base rails with sheets of metal or any substance not affected by moisture.
4. Attach the sleeve to the unit using the ten (10) ¾" long self-tapping screws supplied with the sleeve.
5. Install the exhaust sleeve and fresh air partition using twelve (12) ¾" long screws. Extend the sleeve and partition out until they are flush with the louver grill attachment angles.
6. Lock the sleeve and partition in place using the ½" long screws through the slots into the pre-punched holes.
7. A bottom trim piece is shipped loose for installation beneath the doors. Attach the trim piece to the unit with screws provided.
8. The compressor is secured to the base with two (2) bolts for shipping. Both bolts are identified with a tag. Remove shipping bolts if not previously removed (see Figure 4 on page 10).

FIGURE 11B
Unit Mounting

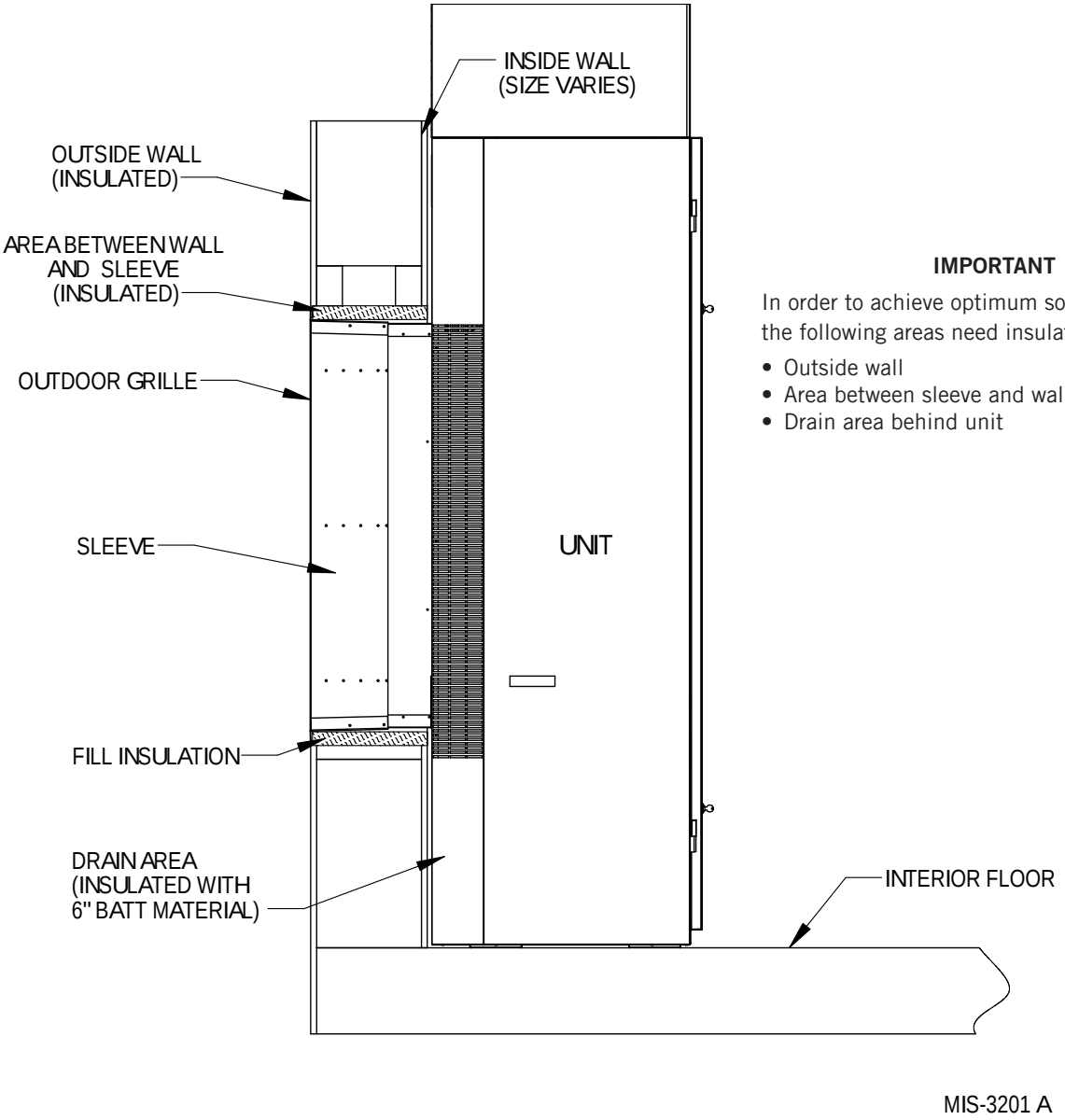

IMPORTANT

In order to achieve optimum sound reduction, the following areas need insulated:

- Outside wall
- Area between sleeve and wall
- Drain area behind unit

Duct Work

Any heat pump is more critical of proper operating charge and an adequate duct system than a straight air conditioning unit. All duct work must be properly sized for the design airflow requirement of the equipment. Air Conditioning Contractors of America (ACCA) is an excellent guide to proper sizing. All duct work or portions thereof not in the conditioned space should be properly insulated in order to both conserve energy and prevent condensation or moisture damage. When duct runs through unheated spaces, it should be insulated with a minimum of 1" of insulation. Use insulation with a vapor barrier on the outside of the insulation. Flexible joints should be used to connect the duct work to the equipment in order to keep the noise transmission to a minimum.

The I-TEC series heat pump has provision to attach a supply air duct to the top of the unit. Duct connection size is 20" x 24". The flanges are shipped flat and must be bent upward using sheet metal flanging pliers. The duct work is field supplied. See Figure 12 for suggested attachment method.

Make sure to seal the slots in the bend-up flange at the time of securing the ductwork to the flange. This can be accomplished with either foil tape or caulk. Failing to do so may cause air leakage/whistling of air.

NOTE: *Unit cabinet, supply air duct and duct free plenum are approved for 0" clearance to combustible material.*

The I-TEC series heat pumps are designed for use with free return (non-ducted) and either duct free with the use of IPBDFZ Series Plenum Box (18" or 12") or a duct supply air system.

The IPBDZ Plenum Box mounts on top of the unit and has both vertically and horizontally adjustable louvers on the front discharge grille.

When used with a ducted supply, a cabinet extension may be used to conceal the ductwork above the unit to the ceiling. The ICX28 extends 28" above the unit for a total height of 10'-2" or can be trimmed to any height.

The unit is equipped with a variable speed indoor blower motor which increases in speed with an increase in duct static pressure. The unit will therefore deliver proper rated airflow up to the maximum ESP shown in Table 2 on page 5. However, for quiet operation of the air system, the duct static should be kept as low as practical, within the guidelines of good duct design.

FIGURE 12
Supply Duct Connections

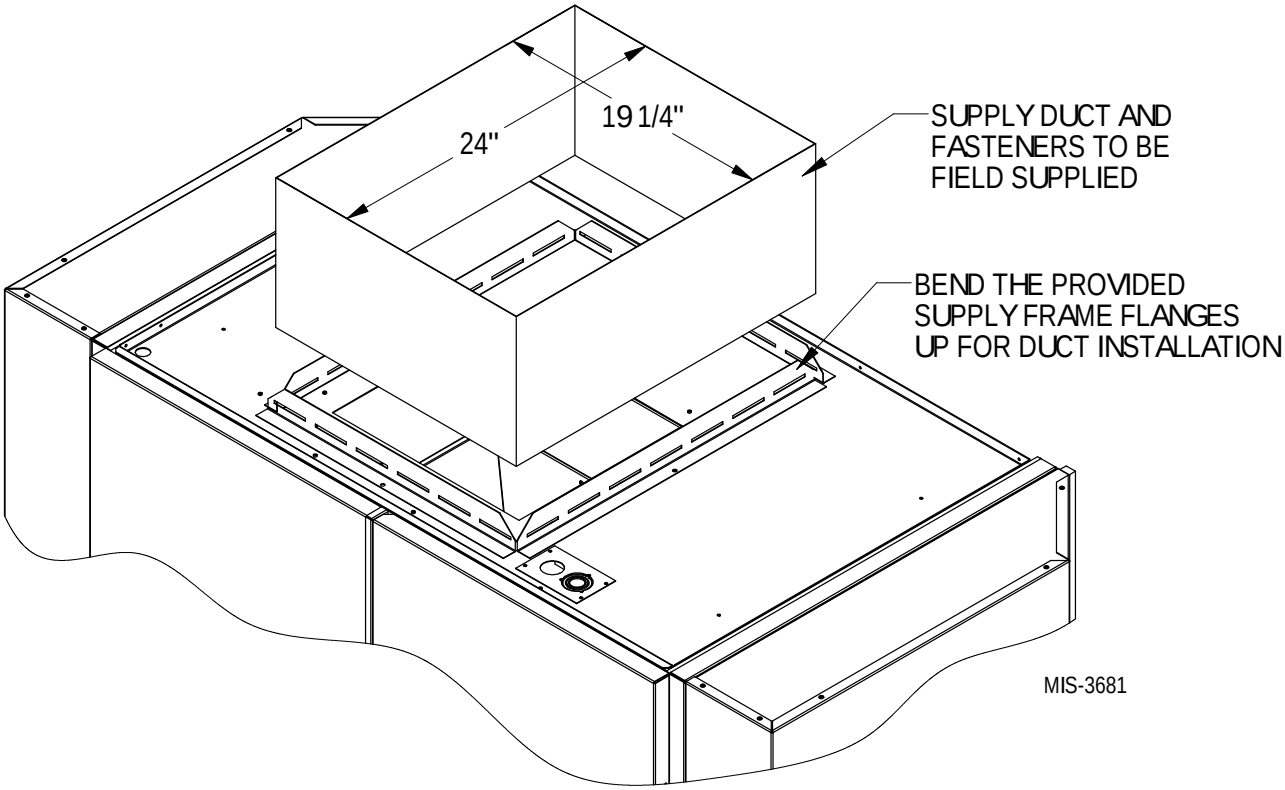

Condensate Drain

There are two condensate drain connections from the condenser drain pan (compressor area). These are visible from the rear of the unit. Factory-installed tubing connects the two drains at a tee connection and then a single drain hose with a barbed hose connector carries the condensate to the draining option chosen. Enough tubing is provided to reach all drain options and can be cut down in length.

The unit is shipped from the factory with the drain line on the left-hand side when looking at the rear of the unit. The tubing can be removed from the drain connections and flipped for a right-hand drain (see Figure 13).

The drain can be routed directly through the floor or through the wall. There are also two optional drain locations in the lower rear back panel (see Figure 13).

The I-TEC design does not require a trap in the condensate disposal tubing. Check local codes to see if a “P” trap is required.

For a stand pipe floor drain or through the wall, there is adequate hose length to reach needed location behind the unit. The lower rear portion of the cabinet is recessed approximately 4" allowing room for a “P” trap (if required) to be installed with the cabinet flush with the wall. Keep in mind, the drain line must be able to be removed from the unit if necessary to remove the unit from the wall.

Access plates are located on the rear of the unit for servicing the drain trap (see Figure 8). **If the drain line is to be routed through an unconditioned space, it must be protected from freezing.**

The condensate drain line can also be routed back into the unit through either the right-hand or left-hand optional drain locations on the rear of the unit. The hole is covered by insulation on the inside of the unit and will have to be cut away. Located inside the unit, about 12" in from the front on both the left and right side are drain holes in the bottom of the base. These holes are covered with insulation and are not visible from inside vent option area. They are located very close to the side panels and can be found by pressing down on the insulation or looking at back of vent option area (see Figure 13). Cut insulation away to expose the hole. A drain trap can now be installed inside of the cabinet, and the drain hose routed directly through the floor.

Once the I-TEC is installed, the rear drains exiting the condenser section can be easily serviced with removal of the pre-painted metal sides (lift off doors, remove four [4] screws to remove side).

If side access is not available, the drain lines and trap can be serviced by removing either one of the drain access panels on the rear of the unit (in the ventilation package area (see Figure 13).

To remove the drain access panels in the rear of this section, simply remove the front door/cover from the box. Rear drain access panels are now visible on both right-hand and left-hand sides in rear of box.

After drain installation is complete, drain area must be insulated for sound purposes with 45" x 24¾" x 6" piece of insulation (see Figure 13).

FIGURE 13
Drain Locations

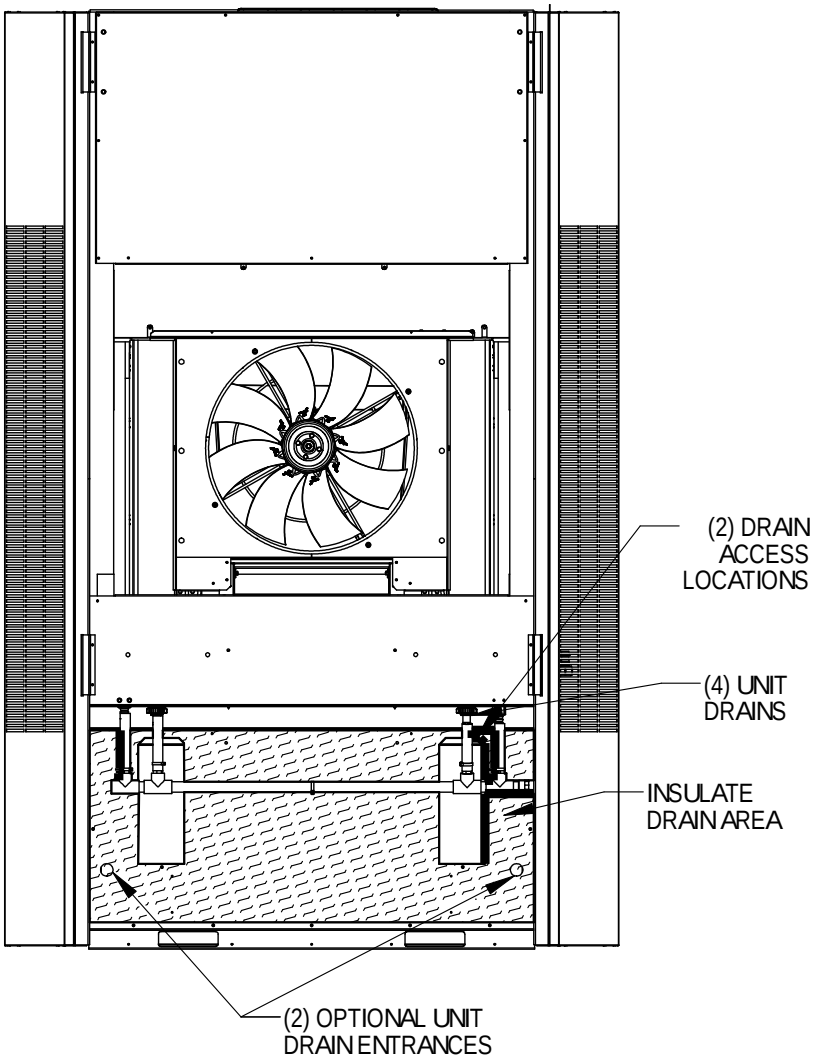

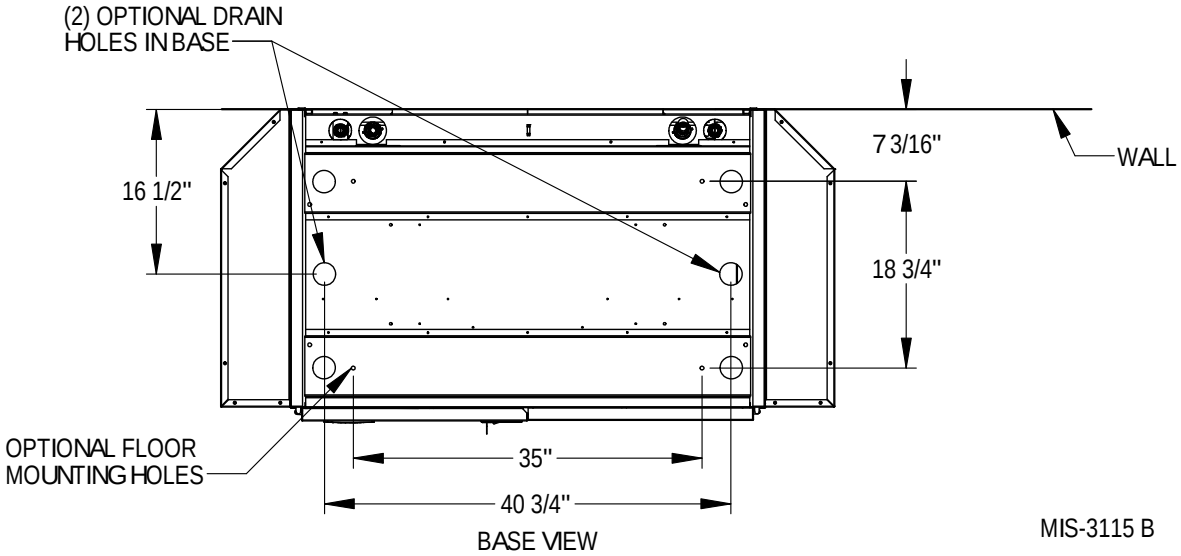

Wiring – Main Power

Refer to the unit rating plate and/or Table 3 on page 6 for wire sizing information and maximum fuse or circuit breaker size. Each unit is marked with a "Minimum Circuit Ampacity". This means that the field wiring used must be sized to carry that amount of current. Depending on the installed KW of electric heat, there may be two field power circuits required. If this is the case, the unit serial plate will so indicate. All models are suitable only for connection with copper wire. Each unit and/or wiring diagram will be marked "Use Copper Conductors Only suitable for at least 75°C". **These instructions must be adhered to.** Refer to the National Electrical Code (NEC) for complete current carrying capacity data on the various insulation grades of wiring material. All wiring must conform to NEC and all local codes.

The electrical data lists fuse and wire sizes (75°C copper) for all models, including the most commonly used heater sizes. Also shown are the number of field power circuits required for the various models with heaters.

The unit rating plate lists a "Maximum Time Delay Relay Fuse" or circuit breaker that is to be used with the equipment. The correct size must be used for proper circuit protection and also to ensure that there will be no nuisance tripping due to the momentary high starting current of the compressor motor.

Three phase models must have proper phasing. A phase monitor is included in all three phase models, and will indicate improper phasing during a call for cooling (24VAC at Y1 terminal). See the provided information in **Phase Monitor** on page 22.

The field wiring conduit connections are located on the top right-hand corner of the unit with a wire raceway to feed the wires down to the circuit breaker(s). See Figure 14.

FIGURE 14
Component Location

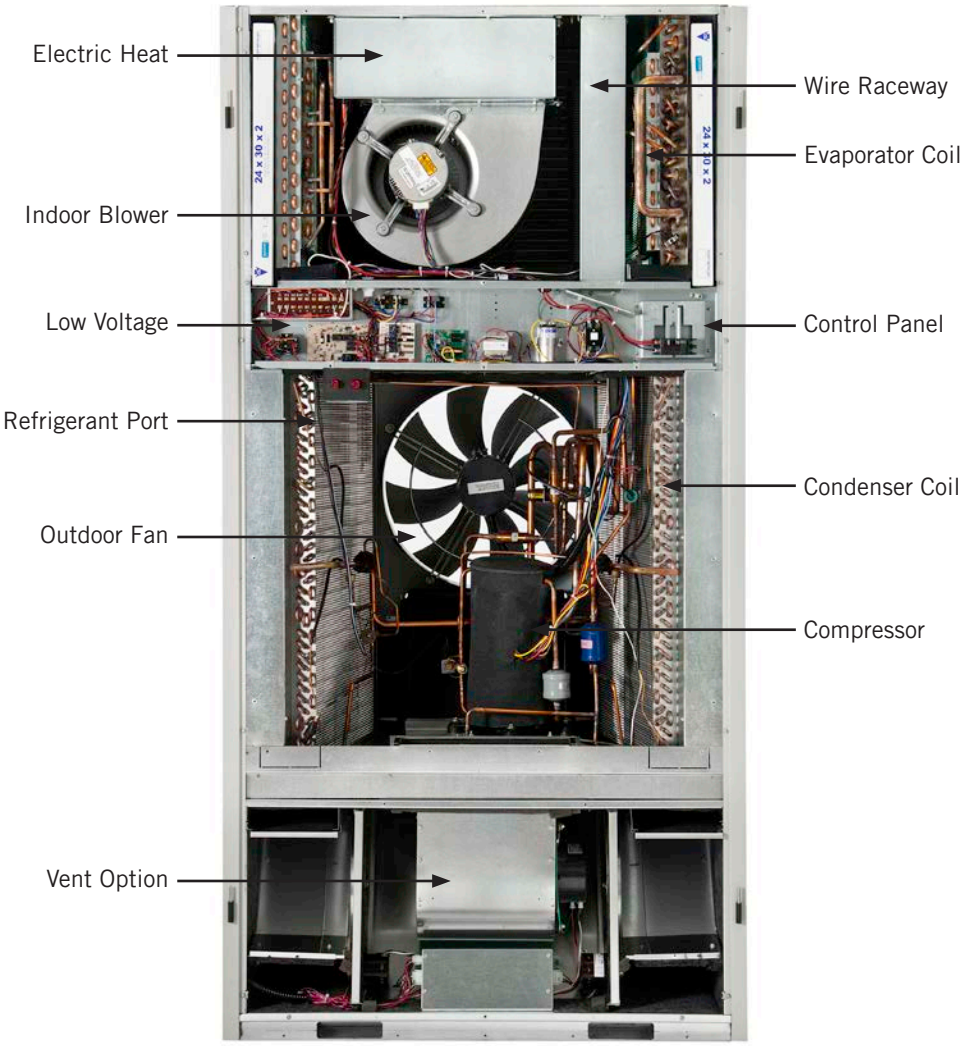

Wiring – Low Voltage

230/208V, 1 Phase and 3 Phase Equipment Dual Primary Voltage Transformers

All equipment leaves the factory wired on 240V tap. For 208V operation, reconnect from 240V to 208V tap. The acceptable operating voltage range for the 240 and 208V taps are as noted in Table 4.

NOTE: *The voltage should be measured at the field power connection point in the unit and while the unit is operating at full load (maximum amperage operating condition).*

TABLE 4
Operating Voltage Range

Tap	Range
240V	253 – 216
208V	215 – 197

The standard unit includes a remote thermostat connection terminal strip. See Figure 15 on page 25 for thermostat connections. Compatible thermostats are listed in Table 5.

TABLE 5
Wall Thermostats

Thermostat	Predominant Features
8403-060 (1120-445)	3 Stage Cool; 3 Stage Heat Programmable/Non-Programmable Electronic HP or Conventional Auto or Manual changeover
CS9B-THOA	3 Stage Heat, 3 Stage Cool, Prog/ NonProg, HP or Conv, Auto or Manual Changeover, Humidity Sensor w/dehumidification, Motion Sensor w/Intelligent Learning Control, BACnet-compatible
CS9B-THOCA	3 Stage Heat, 3 Stage Cool, Prog/ NonProg, HP or Conv, Auto or Manual Changeover, Humidity Sensor w/dehumidification, CO_2 Sensor, Motion Sensor w/Intelligent Learning Control, BACnet-compatible
CS9BE-THOA	3 Stage Heat, 3 Stage Cool, Prog/ NonProg, HP or Conv, Auto or Manual Changeover, Humidity Sensor w/dehumidification, Motion Sensor, Intelligent Learning Control, BACnet-compatible, Ethernet-compatible
CS9BE-THOCA	3 Stage Heat, 3 Stage Cool, Prog/ NonProg, HP or Conv, Auto or Manual Changeover, Humidity Sensor w/ dehumidification, CO_2 Sensor, Motion Sensor w/Intelligent Learning Control, BACnet-compatible, Ethernet-compatible

TABLE 6
CO_2 Controller

Part Number	Predominate Features
8403-096	Normally Open SPST relay closes-on-rise 24V dual wave length sensor. Default setting 950ppm, adjustable to 0-2000ppm Default off setting 1000ppm, adjustable to 0-200 ppm can be calibrated

Low Voltage Connections

These units use a grounded 24 volt AC low voltage circuit.

"G" terminal is the *fan input*.

"Y1" terminal is the *compressor part load input*.

"Y2" terminal is the *compressor full load input*.

"B/W1" terminal is the *reversing valve input*. The reversing valve must be energized for heating mode.

"R" terminal is *24 VAC hot*.

"C" terminal is *24 VAC grounded.*

"L" terminal is *compressor lockout output.* This terminal is activated on a high or low pressure trip. This is a 24 VAC output.

"W2" terminal is *first stage electric heat* (if equipped). First stage electric heat can be operated simultaneously with the heat pump operating.

"A" terminal is the *ventilation input*. This terminal energizes any factory-installed ventilation option.

"W3" terminal is *second stage electric heat*. When "W3" terminal is energized, it locks out compressor operation to limit discharge air temperature and required branch circuit ampacity.

NOTE: *For total and proper control using DDC, a minimum of nine (9) controlled outputs are needed when above 10KW electric heat is employed with ventilation, a total of eight (8) controlled outputs with below 10KW electric heat with ventilation, seven (7) controlled outputs below 10KW electric heat with no ventilation, seven (7) controlled outputs with no electric heat (but with ventilation) and six (6) controlled outputs with no electric heat and no ventilation. If dehumidification model and vent, ten (10) controlled outputs are needed when above 10KW electric heat is employed with ventilation.*

See Table 7 on page 24 for low voltage connections for DDC controls.

TABLE 7
Low Voltage Connections for DDC Control

Fan Only	Energize G
Cooling Part Load	Energize G, Y1
Cooling Full Load	Energize G, Y1, Y2
HP Heating Part Load	Energize G, Y1, B/W1
HP Heating Full Load	Energize G, Y1, Y2, B/W1
HP Heating Full Load + Electric Heat (up to 10KW)	Energize G, Y1, Y2, B/W1, W2
Heating with Bank #1 Electric Heat Only	Energize G, W2
Emergency Heat (heat pump operation is negated for this conditions)	Energize G, W2, W3
Ventilation	Energize A

Variable Speed ECM Motor

This unit is equipped with a variable speed ECM motor. The motor is designed to maintain rated airflow up to the maximum static allowed.

⚠ CAUTION

Do not plug in or unplug blower motor connectors while the power is on. Failure to remove power prior to unpluging or plugging in the motor could result in motor failure.

FIGURE 15
Basic Heat Pump with No Ventilation Package Thermostat Connections

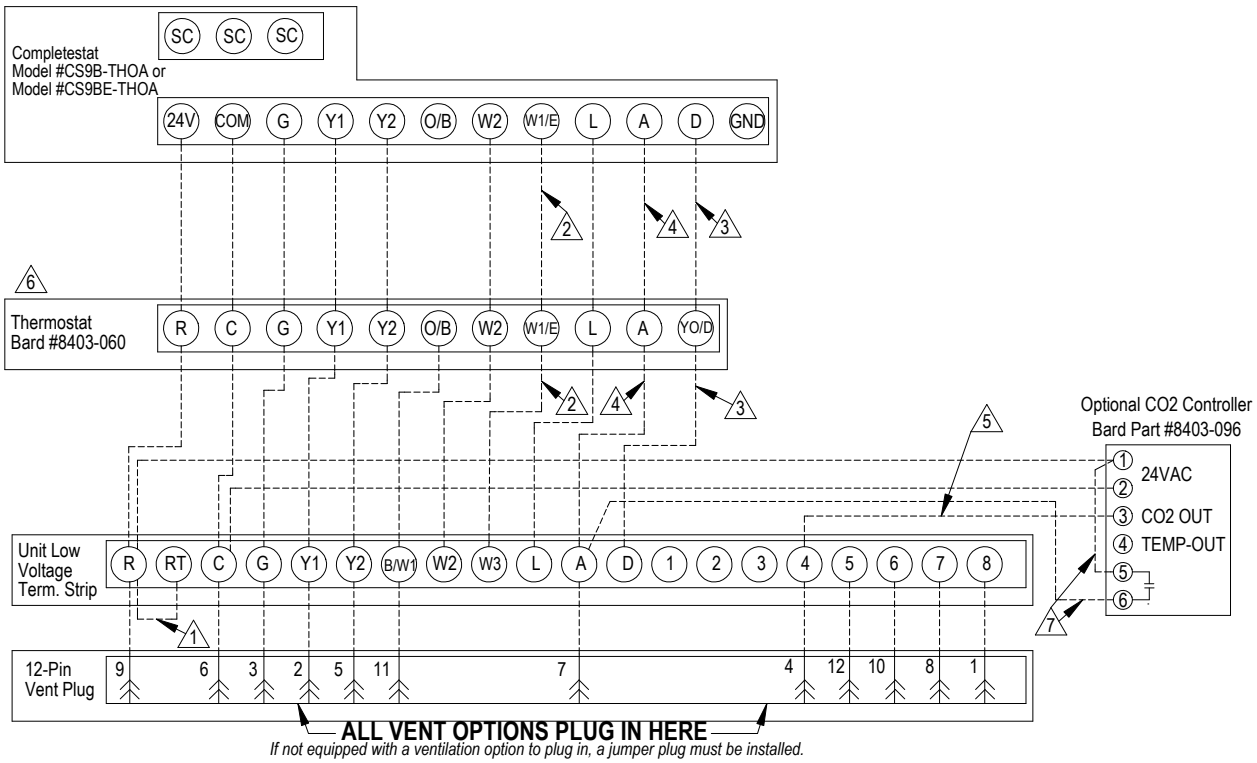

1. Factory installed jumper. Remove jumper and connect to N.C fire alarm circuit if emergency shutdown required.
2. Wire not needed below 15KW.
3. Wire required for dehumidification models only.
4. Do not connect "A" from thermostat if optional CO2 controller is used
5. 0-10 VDC modulating C02 control signal for modulating ventilation control (optional for ECON only - see vent instruction manuals)
6. Ensure model configuration is heat pump and not heat/cool. Must be configured to programmable and fan set to be programmed fan for the "A" output to function during scheduled occupied periods. Must be configured for multi-stage for Y1 output to be active 1st stage cooling. For dehumidification, must be configured for "No Economizer" for YO/D to be active for humidity control.
7. Do not add these wires if setting up for modulating control.

MIS-4395

These units require R-410A refrigerant and Polyol Ester oil.

General

1. Use separate service equipment to avoid cross contamination of oil and refrigerants.
2. Use recovery equipment rated for R-410A refrigerant.
3. Use manifold gauges rated for R-410A (800 psi/250 psi low).
4. R-410A is a binary blend of HFC-32 and HFC-125.
5. R-410A is nearly azeotropic—similar to R-22 and R-12. Although nearly azeotropic, charge with liquid refrigerant.
6. R-410A operates at 40-70% higher pressure than R-22 and systems designed for R-22 cannot withstand this higher pressure.
7. R-410A has an ozone depletion potential of zero, but must be reclaimed due to its global warming potential.
8. R-410A compressors use Polyol Ester oil.
9. Polyol Ester oil is hygroscopic; it will rapidly absorb moisture and strongly hold this moisture in the oil.
10. A liquid line dryer must be used; even a deep vacuum will not separate moisture from the oil.
11. Limit atmospheric exposure to 15 minutes.
12. If compressor removal is necessary, always plug compressor immediately after removal. Purge with small amount of nitrogen when inserting plugs.

Topping Off System Charge

If a leak has occurred in the system, Bard Manufacturing **recommends** reclaiming, evacuating (see criteria above) and charging to the nameplate charge. However, if done correctly, topping off the system charge can be done without problems.

With R-410A, there are no significant changes in the refrigerant composition during multiple leaks and recharges. R-410A refrigerant is close to being an azeotropic blend (it behaves like a pure compound or single component refrigerant). The remaining refrigerant charge, in the system, may be used after leaks have occurred and then "top-off" the charge by utilizing the charging charts on the inner control panel cover as a guideline.

REMEMBER: *When adding R-410A refrigerant, it must come out of the charging cylinder/tank as a liquid to avoid any fractionation and to ensure optimal system performance. Refer to instructions for the cylinder that is being utilized for proper method of liquid extraction.*

⚠ WARNING

Failure to conform to these practices could lead to injury or death.

Safety Practices

1. Never mix R-410A with other refrigerants.
2. Use gloves and safety glasses. Polyol Ester oils can be irritating to the skin and liquid refrigerant will freeze the skin.
3. Never use air and R-410A to leak check; the mixture may become flammable.
4. Do not inhale R-410A—the vapor attacks the nervous system, creating dizziness, loss of coordination and slurred speech. Cardiac irregularities, unconsciousness and ultimately death can result from breathing this concentration.
5. Do not burn R-410A. This decomposition produces hazardous vapors. Evacuate the area if exposed.
6. Use only cylinders rated DOT4BA/4BW 400.
7. Never fill cylinders over 80% of total capacity.
8. Store cylinders in a cool area, out of direct sunlight.
9. Never heat cylinders above 125°F.
10. Never trap liquid R-410A in manifold sets, gauge lines or cylinders. R-410A expands significantly at warmer temperatures. Once a cylinder or line is full of liquid, any further rise in temperature will cause it to burst.

Important Installer Note

For improved start-up performance, wash the indoor coil with a dishwasher detergent.

Description of Standard Equipment

Solid State Electronic Heat Pump Control

Provides efficient 30-, 60- or 90-minute defrost cycle. A thermistor sensor and speed up terminal for service along with a 8-minute defrost override are standard on the electronic heat pump control.

High/Low Pressure Switch

Provides refrigerant circuit high pressure and loss of charge protection. Includes lockout circuit built into heat pump control that is resettable from room thermostat.

Five Minute Compressor Time Delay

Provides short cycle protection for the compressor which extends compressor life. Built into the electronic heat pump control as standard.

Condensate Overflow

Senses and provides system shut down if draining issue causes water level to rise in the lower drain pan.

Low Ambient Control

The low ambient control permits cooling operation down to 0°F outdoor ambient.

Phase Monitor

All units with three phase scroll compressors are equipped with a three phase line monitor to prevent compressor damage due to phase reversal.

The phase monitor in this unit is equipped with two LEDs. If the Y signal is present at the phase monitor and phases are correct, the green LED will light and the compressor contactor is allowed to energize.

If phases are reversed, the red fault LED will be lit and compressor operation is inhibited.

If a fault condition occurs, reverse two of the supply leads to the unit. **Do not reverse any of the unit factory wires as damage may occur.**

Three Phase Scroll Compressor Start Up Information

Scroll compressors, like several other types of compressors, will only compress in one rotational direction. Direction of rotation is not an issue with single phase compressors since they will always start and run in the proper direction.

However, three phase compressors will rotate in either direction depending upon phasing of the power. Since there is a 50-50 chance of connecting power in such a way as to cause rotation in the reverse direction, ***verification of proper rotation must be made.*** Verification of proper rotation direction is made by observing that suction pressure drops and discharge pressure rises when the compressor is energized. Reverse rotation also results in an elevated sound level over that with correct rotation, as well as substantially reduced current draw compared to tabulated values.

Verification of proper rotation must be made at the time the equipment is put into service. If improper rotation is corrected at this time, there will be no negative impact on the durability of the compressor. However, reverse operation for even 1 hour may have a negative impact on the bearing due to oil pump out.

All three phase scroll compressors used in the I-TEC series are wired identically internally. As a result, once the correct phasing is determined for a specific system or installation, connecting properly phased power leads to the same Fusite terminal should maintain proper rotation direction. The direction of rotation of the motor may be changed by reversing any two line connections to the unit.

Service Hints

1. Caution user to maintain clean air filters at all times and to not needlessly close off supply air registers. This may reduce airflow through the system, which shortens equipment service life as well as increasing operating costs and noise levels.
2. Switching to heating cycle at 75°F or higher outside temperature may cause a nuisance trip of the remote reset high pressure switch. Turn thermostat off, then on to reset the high pressure switch.
3. The heat pump wall thermostats perform multiple functions. Be sure that all function switches are correctly set for the desired operating mode before trying to diagnose any reported service problems.
4. Check all power fuses or circuit breakers to be sure they are the correct rating.
5. Periodic cleaning of the outdoor coils to permit full and unrestricted airflow circulation is essential.
6. Annual maintenance is required to make sure that all of the systems are functioning properly.
   a. Check to make sure that the drains are not obstructed in any way.
   b. Remove any debris in the condenser section of the unit.
   c. Inspect and wash outdoor coils as necessary.
7. All motors are sealed and require no oiling.

Sequence of Operation

Cooling Part Load

Circuit R-Y1 makes at thermostat pulling in compressor contactor, starting the compressor and outdoor motor. The G (indoor motor) circuit is automatically completed on any call for cooling operation or can be energized by manual fan switch on subbase for constant air circulation.

Cooling Full Load

Circuit R-Y1 & Y2 makes at the thermostat energizing the 2nd stage solenoid in the compressor. The default position of the compressor staging solenoid is non-energized. The compressor will run at low capacity until this solenoid is energized.

Heating Stage 1

A 24V solenoid coil on reversing valve controls heating cycle operation. Two thermostat options, one allowing "Auto" changeover from cycle to cycle and the other constantly energizing solenoid coil during heating season and thus eliminating pressure equalization noise except during defrost, are to be used. On "Auto" option, a circuit is completed from R-B and R-Y1 on each heating "on" cycle, energizing reversing valve solenoid and pulling in compressor contactor starting compressor and outdoor motor. R-G also make starting indoor blower motor. Heat pump heating cycle now in operation. The second option has no "Auto" changeover position, but instead energizes the reversing valve solenoid constantly whenever the system switch on subbase is placed in "Heat" position, the "B" terminal being constantly energized from R. A thermostat demand for Stage 1 heat completes R-Y1 circuit, pulling in compressor contactor starting compressor and outdoor motor. R-G also make starting indoor blower motor.

Heating Stage 2

Circuit R-Y1 & B continue to be energized. Circuit R-Y2 makes at the thermostat energizing the 2nd stage solenoid in the compressor.

Heating Stage 2 and Electric Heat (Up to 10KW)

Circuit R-Y1,Y2 & B continue to be energized for heating stage 2. On the a call for electric heat, circuit R-W2 makes at the thermostat, pulling in the heat contactor for the strip heat.

Emergency Heat

The thermostat drops out the heat pump call. Circuit R-W2 continues to be energized and R-W3 makes at the thermostat, pulling in the second heat contactor, if equipped.

Pressure Service Ports

High and low pressure service ports are installed on all units so that the system operating pressures can be observed. Pressure tables can be found later in the manual covering all models. It is imperative to match the correct pressure table to the unit by model number. Upper and lower service doors must be attached to obtain proper reading.

This unit employs high-flow Coremax valves instead of the typical Schrader type valves.

WARNING! *Do NOT use a Schrader valve core removal tool with these valves. Use of such a tool could result in eye injuries or refrigerant burns!*

To change a Coremax valve without first removing the refrigerant, a special tool is required which can be obtained at www.fastestinc.com/en/SCCA07H. See the replacement parts manual for replacement core part numbers.

Vent Connection Plug

All units are equipped with a vent connection plug in the side of the control panel for the different ventilation packages to plug in to. If the compressor will not start and there is no "Y1" at the defrost board, first check to make sure that either the optional vent is plugged into the vent connection plug or the supplied jumper plug is in place. **The unit will not operate without anything plugged in.** This plug is located on the bottom of the low voltage box inside of the control panel. If the unit is supplied with a factory-installed vent package, it will be plugged in but the jumper plug will also be tethered next to the connection for troubleshooting purposes, if necessary.

Defrost Cycle

The defrost cycle is controlled by temperature and time on the solid state heat pump control (see Figure 16).

When the outdoor temperature is in the lower 40°F temperature range or colder, the outdoor coil temperature is 32°F or below. This coil temperature is sensed by the coil temperature sensor mounted near the bottom of the outdoor coil. Once coil temperature reaches 30°F or below, the coil temperature sensor sends a signal to the control logic of the heat pump control and the defrost timer will start accumulating run time.

After 30, 60 or 90 minutes of heat pump operation at 30°F or below, the heat pump control will place the system in the defrost mode.

During the defrost mode, the refrigerant cycle switches back to the cooling cycle, the outdoor motor stops, electric heaters are energized and hot gas passing through the outdoor coil melts any accumulated frost. When the temperature rises to approximately 57°F, the coil temperature sensor will send a signal to the heat pump control which will return the system to heating operations automatically.

If some abnormal or temporary condition such as a high wind causes the heat pump to have a prolonged defrost cycle, the heat pump control will restore the system to heating operation automatically after 8 minutes.

The heat pump defrost control board has an option of 30-, 60- or 90-minute setting. All models are shipped from the factory on the 60-minute pin. If special circumstances require a change to another time, remove the wire from the 60-minute terminal and reconnect to the desired terminal.

There is a cycle speed up jumper on the control. This can be used for testing purposes to reduce the time between defrost cycle operation without waiting for time to elapse.

Use a small screwdriver or other metallic object, or another ¼" QC, to short between the *SPEEDUP* terminals to accelerate the HPC timer and initiate defrost.

Be careful not to touch any other terminals with the instrument used to short the *SPEEDUP* terminals. It may take up to 15 seconds with the *SPEEDUP* terminals shorted for the speedup to be completed and the defrost cycle to start.

As soon as the defrost cycle kicks, in remove the shorting instrument from the SPEEDUP terminals. Otherwise the timing will remain accelerated and run through the 1-minute minimum defrost length sequence in a matter of seconds and will automatically terminate the defrost sequence.

There is an initiate defrost jumper (*SEN JMP*) on the control that can be used at any outdoor ambient during the heating cycle to simulate a 0° coil temperature.

This can be used to check defrost operation of the unit without waiting for the outdoor ambient to fall into the defrost region.

By placing a jumper across the *SEN JMP* terminals (a ¼" QC terminal works best) the defrost sensor mounted on the outdoor coil is shunted out and will activate the timing circuit. This permits the defrost cycle to be checked out in warmer weather conditions without the outdoor temperature having to fall into the defrost region.

In order to terminate the defrost test, the SEN JMP jumper must be removed. If left in place too long, the compressor could stop due to the high pressure condition created by operating in the cooling mode with outdoor fan off. Pressure will rise rapidly as there is likely no actual frost on the outdoor coil in this artificial test condition.

There is also a 5-minute compressor time delay function built into the Heat Pump Control to protect the compressor from short cycling conditions. The board's LED will have a fast blink rate when in the compressor time delay function. In some instances, it is helpful to the service technician to override or speed up this timing period, and shorting out the *SPEEDUP* terminals for a few seconds can do this.

Low Pressure Switch Bypass Operation

The control has a selectable (SW1) low pressure switch bypass set up to ignore the low pressure switch input during the first (30, 60, 120 or 180 seconds) of "Y" operation.

After this period expires, the control will then monitor the low pressure switch input normally to make sure that the switch is closed during "Y" operation.

High Pressure Switch Operation

The control has a built-in lockout system that allows the unit to have the high pressure switch trip up to two times in 1 hour and only encounter a "soft" lockout. A "soft" lockout shuts the compressor off and waits for the pressure switch to reset, which at that point then allows the compressor to be restarted as long as the 5-minute short cycle timer has run out. If the high pressure switch trips a third time within 1 hour, the unit is in "hard" lockout indicating something is certainly wrong and it will not restart itself.

FIGURE 16
Heat Pump Control Defrost Cycle

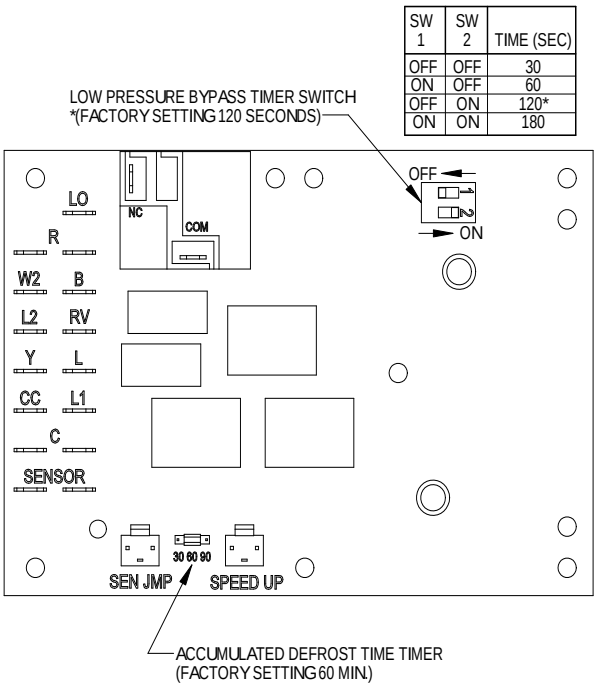

TROUBLESHOOTING

Solid State Heat Pump Control

A thorough understanding of the defrost cycle sequence is essential. Review that section on page 28 prior to troubleshooting the control.

1. Turn on AC power supply to unit.
2. Turn thermostat blower switch to “fan on”— the indoor blower should start. (If it doesn’t, troubleshoot indoor unit and correct problem.)
3. Turn thermostat blower to “auto” position. Indoor blower should stop. ***NOTE:*** *Many models have a 1-minute blower time delay on "off" command; wait for this to time out.*
4. Set system switch to “heat” or “cool”. Adjust thermostat to call for heat or cool. The indoor blower, compressor and outdoor fan should start.

NOTE: *If there was no power to 24 volt transformer, the compressor and outdoor fan motor will not start for 5 minutes. This is because of the compressor short cycle protection.*

Code	Function
Slow Blink	Normal Operation
Fast Blink	Compressor Time Delay
1 Blink	Low Pressure Switch Failure
2 Blink	High Pressure Switch Failure or Condensate Overflow Switch Activated
3 Blink	Defrost Mode Active
4 Blink	High Pressure or Overflow Switch Lockout

TABLE 8 – Troubleshooting

Symptom	Description, Check & Possible Causes	What & How to Check / Repair
Compressor will not start (heating or cooling)	**1. Check for LED illumination.** Is there an LED illuminated on the board (flashing)?	Yes = go to Step #2; No = go to Step #3
	2. Check for error codes. Is the LED flashing a Code?	Yes = go to Step #4; No = go to Step #8
	3. Check for power at board. Is there 24 volts AC between R and C?	Yes = go to Step #13; No = go to Step #9
	4. Check codes. What code is blinking?	Code "1", go to Step #6; Code "2", go to Steps #7A & #7B; Fast Blink, go to Step #5
	5. Compressor delay active. Wait for 5 minute delay or jump board's "speed up pins".	Check for proper operation; if still needed, go back to Step #1.
	6. Low pressure fault.	Check wiring circuit and unit pressures.
	7A. High pressure fault.	Check wiring circuit and unit pressures.
	7B. Condensate overflow fault.	Check upper indoor coil drains; check lower outdoor coil drains; check main drain line.
	8. Check for Compressor input signal. Is there 24 volts AC between Y and C?	Yes = go to Step #10; No = go to Step #11
	9. No power to board.	The unit either does not have unit voltage, the transformer is bad or the unit wiring is incorrect.
	10. Check for Compressor output signal. Is there 24 volts AC between CC & C?	Yes = go to Step #12; No = go to Step #13
	11. No "Y" compressor input signal.	Check thermostat wiring, incorrect phase of unit (see section on Phase Monitor), and finally unit wiring.
	12. No "CC" compressor output signal.	Check compressor contactor for proper operation and finally check compressor.
	13. Faulty board.	Replace defrost board.
Fan outdoor motor does not run (cooling or heating except during defrost)	Heat pump control defective	Check across fan relay on heat pump control. (Com-NC) Replace heat pump control.
	Motor defective	Check for open or shorted motor winding. Replace motor.
	Motor capacitor defective	Check capacitor rating. Check for open or shorted capacitor. Replace capacitor.
Reversing valve does not energize (heating only)	Heat pump control defective	Check for 24V between RV-C and B-C. 1. Check control circuit wiring. 2. Replace heat pump control
	Reversing valve solenoid coil defective	Check for open or shorted coil. Replace solenoid coil.
Unit will not go into defrost (heating only)	Temperature sensor or heat pump control defective	Disconnect temperature sensor from board and jumper across "SPEEDUP" terminals and "SEN JMP" terminals. This should cause the unit to go through a defrost cycle within 1 minute. 1. If unit goes through defrost cycle, replace temperature sensor. 2. If unit does not go through defrost cycle, replace heat pump control.
Unit will not come out of defrost (heating only)	Temperature sensor or heat pump control defective.	Jumper across "SPEEDUP" terminal. This should cause the unit to come out of defrost within 1 minute. 1. If unit comes out of defrost cycle, replace temperature sensor. 2. If unit does not come out of defrost cycle, replace heat pump control.

Checking Temperature Sensor

1. Disconnect temperature sensor from board and from right-hand outdoor coil.
2. Use an ohmmeter and measure the resistance of the sensor. Also use ohmmeter to check for short or open.
3. Check resistance reading to chart of resistance use sensor ambient temperature. (Tolerance of part is ±10%.)
4. If sensor resistance reads very low, then sensor is shorted and will not allow proper operation of the heat pump control.
5. If sensor is out of tolerance, shorted, open or reads very low ohms, it should be replaced.

TABLE 9
Temperature (F) vs. Resistance (R) of Temperature Sensor

F	R	F	R	F	R	F	R
-25	196871	13	56985	51	19374	89	7507
-24	190099	14	55284	52	18867	90	7334
-23	183585	15	53640	53	18375	91	7165
-22	177318	16	52051	54	17989	92	7000
-21	171289	17	50514	55	17434	93	6840
-20	165487	18	49028	56	16984	94	6683
-19	159904	19	47590	57	16547	95	6531
-18	154529	20	46200	58	16122	96	6383
-17	149355	21	44855	59	15710	97	6239
-16	144374	22	43554	60	15310	98	6098
-15	139576	23	42295	61	14921	99	5961
-14	134956	24	41077	62	14544	100	5827
-13	130506	25	39898	63	14177	101	5697
-12	126219	26	38757	64	13820	102	5570
-11	122089	27	37652	65	13474	103	5446
-10	118108	28	36583	66	13137	104	5326
-9	114272	29	35548	67	12810	105	5208
-8	110575	30	34545	68	12492	106	5094
-7	107010	31	33574	69	12183	107	4982
-6	103574	32	32634	70	11883	108	4873
-5	100260	33	31723	71	11591	109	4767
-4	97064	34	30840	72	11307	110	4663
-3	93981	35	29986	73	11031	111	4562
-2	91008	36	29157	74	10762	112	4464
-1	88139	37	28355	75	10501	113	4367
0	85371	38	27577	76	10247	114	4274
1	82699	39	26823	77	10000	115	4182
2	80121	40	26092	78	9760	116	4093
3	77632	41	25383	79	9526	117	4006
4	75230	42	24696	80	9299	118	3921
5	72910	43	24030	81	9077	119	3838
6	70670	44	23384	82	8862	120	3757
7	68507	45	22758	83	8653	121	3678
8	66418	46	22150	84	8449	122	3601
9	64399	47	21561	85	8250	123	3526
10	62449	48	20989	86	8057	124	3452
11	60565	49	20435	87	7869		
12	58745	50	19896	88	7686		

Troubleshooting Condensate Overflow Systems

The Bard I-TEC Series is equipped with dual condensate overflow switches. One switch (float type) is located in the indoor drain pan. It is secured to the drain pan with a screw-down clamp (see Figure 17). The second switch (electronic/conductance) is located in the control panel with the sensor mounted adjacent to the left outdoor coil in the outdoor drain pan (see Figure 18).

The float type switch in the indoor drain pan is equipped with an LED light that indicates when an overflow condition is present.

Electrically, the two condensate switches are wired in series with the unit's high pressure switch. All three switches have normally closed contacts, but if any of them are activated, it will then activate initially a soft lockout of the compressor circuit. If recurrence happens on the same cooling call cycle, a hard lockout of the compressor circuit will occur.

The electronic switch for the outdoor drain pan has three LED lights giving a status update (see Figure 19).

To test the electronic overflow switch function, bridge across the probes with a wet finger. The unit should stop, and the RED LED should come on. Remove the finger from the probe. After approximately 5 seconds, the RED LED should go off and the GREEN and AMBER LEDs should come on.

To Reset (Clear AMBER LED):

Bridge across the sensor probes with wet finger until the RED LED comes on, then remove the bridge quickly. While the RED LED is still on, bridge the probes again quickly (within 2 seconds). Hold until the AMBER LED goes off, then immediately remove the bridge.

FIGURE 17
Indoor Condensate Overflow Switch

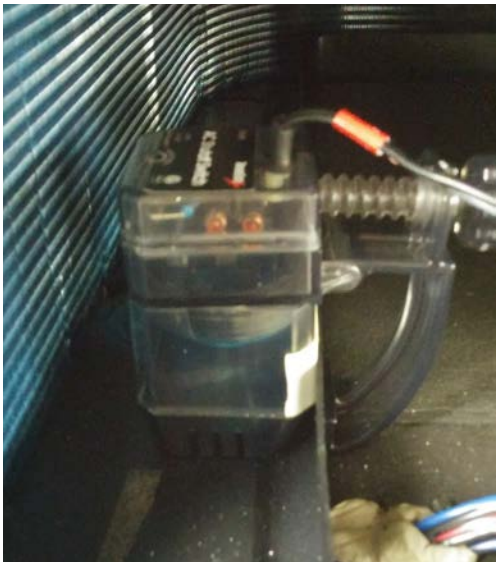

FIGURE 18
Outdoor Condensate Sensor

FIGURE 19
Outdoor Condensate Control

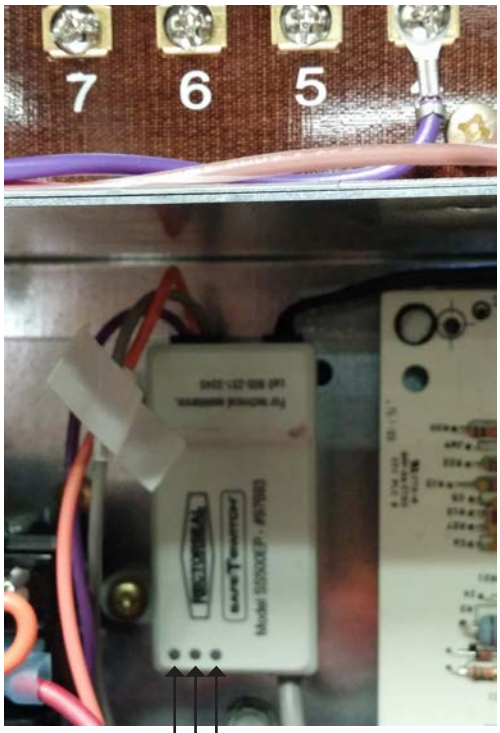

RED LED Illuminated:
Overflow currently being detected, switch activated

GREEN LED Illuminated:
No overflow currently being detected

AMBER LED Illuminated:
Previous condition detected

Troubleshooting ECM™ 142R Outdoor Fan Motors

⚠ WARNING

Exposed moving parts.

Disconnect all electrical power before servicing.

Failure to do so can result in severe injury or amputation.

⚠ WARNING

Electrical shock hazard.

Disconnect the remote electric power supply or supplies before servicing.

Electric shock can result in serious injury or death.

⚠ CAUTION

Do not operate motor without fan blade attached. Such operations will cause the motor to oscillate up and down.

⚠ CAUTION

The correct replacement motor from the manufacturer that is a direct replacement for the failed motor must be obtained.

Using the wrong motor voids all warranties and may produce unexpected results.

1. In normal operation, this motor may rock back and forth on start up. Do not replace if this is the only symptom identified.
2. If the system is operating properly, but the motor appears to run slower than it should, the motor is good. High efficiency systems with optimized fan blades are engineered to run slow to decrease noise. The Bard I-TEC Series models also adjust fan speed based upon varied outdoor ambient conditions to optimize sound and unit efficiency.
3. If the system is noisy, freezing up, running a high head pressure, tripping the high pressure switch or compressor overload, check the following:
   a. Ensure cleanliness of condenser coil(s) and fan blade/shroud.
   b. Confirm the fan blade is not bent or deformed, isn't rubbing on the shroud and that it is tight on the motor shaft. Also ensure the motor is secure in its mounting system, and the mounting system is secure to the unit.
   c. The Bard I-TEC is equipped with a low ambient control pressure switch. This pressure switch completes the 24VAC Common feed to the outdoor fan motor control in cooling mode. If this switch is defective, the outdoor air temperature is too cold to raise the head pressure to the 325# switch closing set-point or the system charge is too low, this could be the cause of the issue. (In heat pump {heating} mode, the low ambient fan cycling control is bypassed.)
   d. If motor is not running, go to next section.
4. If the motor does not appear to be running at the proper speed or does not shut off, refer to the next section for voltage checks to determine if the motor is getting the proper input signals.

   If the motor IS NOT receiving any communication, troubleshoot the communication issue using the diagnostic table for the fan logic control.

   a. This motor uses a 7 wire harness to control the motor.
      - Line power is connected as follows:

        Red wire connects to "L1"
        Black wire connects to "L2"
        Green/yellow wire connects to ground
      - Control power is connected as follows:

        Blue wire connects to fan relay of the defrost logic control, and subsequently connects to 24VAC common through the fan logic control board. Yellow wire connects to "Y" on the fan logic control board. White wire" connects to "W" on the fan logic control board. Orange wire connects to "O" on the fan logic control board.

NOTE: *A combination of the yellow, white and orange wires being energized (with 24V "R" signal) determines the five different speeds the fan motor will operate at. The fan logic control board uses an outdoor thermistor sensor to determine the speed the fan should operate. It also utilizes the "B" reversing valve input for heat pump mode to determine speed should operate.*

TABLE 10
Troubleshooting ECM™ 142R Outdoor Fan Motor

Check Line Power to Motor	Check between Red and Black Wires for Line Power
	Verify Ground by checking Green Wire to L1 and L2 Line Power
Check for 24VAC common signal to motor (against Transformer "R" Signal)	Check "BR" terminal of Fan Logic Control Board
	Check "Blue" Fan Lead on "Fan Relay Terminal" of "Defrost Logic Control"
	** Is not energized in cooling mode until Low Ambient Fan Cycling Control is closed by 325 PSIG refrigerant pressure. Above 65°F outdoors in cooling mode, the low ambient control is bypassed.
	** Circuit is completed automatically when "B" is energized on the Fan Logic Control Board
Check 24VAC "hot" outputs (to "Blue" on Fan Logic Control) to motor. See the following tables based upon outdoor temperature and model of operation.	

Troubleshooting Fan Logic Control

Please reference the Thermistor Temperature/ Resistance Chart on page 31 (Table 9).

- GREEN STATUS LED – Blinks indicating there is a call for fan operation (simultaneous to call for compressor operation) and is normal.
- RED STATUS LIGHT (LA) – Is illuminated when low ambient control switch is in the closed position. ***NOTE:*** *This is not required in heat pump operation as the low ambient switch is bypassed in this mode of operation. Low ambient switch is also negated in cooling mode above 65°F outdoor temperature.*
- YELLOW STATUS LIGHT (B) – Is illuminated when there is a reversing valve call (for heat pump operation). ***NOTE:*** *As mentioned above, this mode of operation negates low ambient fan cycling control.*

If the board is reading a fan temperature thermistor value of 3375Ω or less (equivalent to 125°F or an "open" sensor), the fan will operate at the highest speed setting (energizes "W" and "Y" outputs on the board).

If the board is reading a fan temperature value of 118,110Ω or greater (equivalent to -10°F or a "shorted" sensor), the fan will operate at the highest speed setting (energizes "W" and "Y" outputs on the board).

If the low ambient switch is open, the red light will not be illuminated and the "BR" terminal will show open. The "BR" terminal is the "24 volt common" switching output to the outdoor fan motor.

TABLE 11
Cooling Mode

O.D. Temp Sensor	24VAC Signals Between
Below 55°F	Orange to Blue
Between 56° - 69°F	White to Blue
Between 70° - 85°F	Yellow to Blue
Between 86° - 112°F	Orange and White to Blue
Above 112°F	White and Yellow to Blue

TABLE 12
Heat Pump Mode

O.D. Temp Sensor	24VAC Signals Between
Above 56°F	Orange to Blue
Between 55° - 30°F	White to Blue
Between 29° - 14°F	Yellow to Blue
Below 13°F	Orange and White to Blue

If the output signals are not matching the specified temperature range, go to Table 9 on page 31 and verify the thermistor output curve. If the motor is receiving proper communications and proper high voltage power, and is still not running, proceed with motor replacement.

Replacing the Motor

This motor is replaced in one piece. The control cannot be replaced separately from the motor. Even if the control is remotely located, the replacement part will be a new control with harness and new motor.

The correct replacement motor from the manufacturer that is a direct replacement for the failed motor must be used.

Using the wrong motor voids all product warranties and may produce unexpected results.

Always mount the replacement motor and control according to the manufacturers specifications using all required hardware to reduce vibration. Make sure all wires are free of the fan blade and not pinched in mountings or cabinet through points.

Troubleshooting ECM™ Indoor Blower Motors

CAUTION:

Disconnect power from unit before removing or replacing connectors, or servicing motor. To avoid electric shock from the motor's capacitors, disconnect power and wait at least 5 minutes before opening motor.

Symptom	Cause/Procedure
Motor rocks slightly when starting	• This is normal start-up for ECM
Motor won't start • No movement	• Check blower turns by hand • Check power at motor • Check low voltage (24 Vac R to C) at motor • Check low voltage connections (G, Y, W, R, C) at motor • Check for unseated pins in connectors on motor harness • Test with a temporary jumper between R - G • Check motor for tight shaft • Perform motor/control replacement check • **Perform Moisture Check**
• Motor rocks, but won't start	• Check for loose or compliant motor mount • Make sure blower wheel is tight on shaft • Perform motor/control replacement check
Motor oscillates up & down while being tested off of blower	• It is normal for motor to oscillate with no load on shaft
Motor starts, but runs erratically • Varies up and down or intermittent	• Check line voltage for variation or "sag" • Check low voltage connections (G, Y, W, R, C) at motor, unseated pins in motor harness connectors • Check "Bk" for erratic CFM command (in variable-speed applications) • Check out system controls, Thermostat • Perform Moisture Check
• "Hunts" or "puffs" at high CFM (speed)	• Does removing panel or filter reduce "puffing"? - Reduce restriction - Reduce max airflow
• Stays at low CFM despite system call for cool or heat CFM	• Check low voltage (Thermostat) wires and connections • Verify fan is not in delay mode; wait until delay complete • "R" missing/not connected at motor • Perform motor/control replacement check
• Stays at high CFM	• "R" missing/not connected at motor • Is fan in delay mode? - wait until delay time complete • Perform motor/control replacement check
• Blower won't shut off	• Current leakage from controls into G, Y or W? Check for Triac switched thermostat or solid-state relay
Excessive noise • Air noise	• Determine if it's air noise, cabinet, duct or motor noise; interview customer, if necessary • High static creating high blower speed? - Is airflow set properly? - Does removing filter cause blower to slow down? Check filter - Use low-pressure drop filter - Check/correct duct restrictions

Symptom	Cause/Procedure
• Noisy blower or cabinet	• Check for loose blower housing, panels, etc. • High static creating high blower speed? - Check for air whistling through seams in ducts, cabinets or panels - Check for cabinet/duct deformation
• "Hunts" or "puffs" at high CFM (speed)	• Does removing panel or filter reduce "puffing"? - Reduce restriction - Reduce max. airflow
Evidence of Moisture • Motor failure or malfunction has occurred and moisture is present	• Replace motor and **Perform Moisture Check**
• Evidence of moisture present inside air mover	• **Perform Moisture Check**

Do	Don't
• Check out motor, controls, wiring and connections thoroughly before replacing motor	• Automatically assume the motor is bad.
• Orient connectors down so water can't get in - Install "drip loops"	• Locate connectors above 7 and 4 o'clock positions
• Use authorized motor and model #'s for replacement	• Replace one motor or control model # with another (unless an authorized replacement)
• Keep static pressure to a minimum: - Recommend high efficiency, low static filters - Recommend keeping filters clean. - Design ductwork for min. static, max. comfort - Look for and recommend ductwork improvement, where necessary	• Use high pressure drop filters; some have ½" H20 drop! • Use restricted returns
• Size the equipment wisely	• Oversize system, then compensate with low airflow
• Check orientation before inserting motor connectors	• Plug in power connector backwards • Force plugs

Moisture Check

- Connectors are oriented "down" (or as recommended by equipment manufacturer)
- Arrange harness with "drip loop" under motor
- Is condensate drain plugged?
- Check for low airflow (too much latent capacity)
- Check for undercharged condition
- Check and plug leaks in return ducts, cabinet

Comfort Check

- Check proper airflow settings
- Low static pressure for lowest noise
- Set low continuous-fan CFM
- Use humidistat and 2-speed cooling units
- Use zoning controls designed for ECM that regulate CFM
- Thermostat in bad location?

Replacing ECM Control Module

To replace the control module for the GE variable-speed indoor blower motor, take the following steps:

1. Have the correct replacement module. The controls are factory programmed for specific operating modes. Even though they look alike, different modules may have completely different functionality.

   USING THE WRONG CONTROL MODULE VOIDS ALL PRODUCT WARRANTIES AND MAY PRODUCE UNEXPECTED RESULTS.
2. Begin by removing AC power from the unit being serviced. **DO NOT WORK ON THE MOTOR WITH AC POWER APPLIED.** To avoid electric shock from the motor's capacitors, disconnect power and wait at least 5 minutes before opening motor.
3. It is not necessary to remove the motor from the blower assembly, nor the blower assembly from the unit. Unplug the two cable connectors to the motor control assembly. There are latches on each connector. **DO NOT PULL ON THE WIRES.** The plugs remove easily when properly released.
4. Locate the screws that retain to the motor control bracket to the sheet metal of the unit and remove them. Remove two (2) nuts that retain the control to the bracket and then remove two (2) nuts that retain sheet metal motor control end plate. *Refer to Figure 20.*
5. Disconnect the three (3) wires interior of the motor control using thumb and forefinger to squeeze the latch tab and the opposite side of the connector plug, gently pulling the connector. **DO NOT PULL ON THE WIRES, GRIP THE PLUG ONLY.** *Refer to Figure 20.*
6. The control module is now completely detached from the motor. Verify with a standard ohmmeter that the resistance from each motor lead (in the motor plug just removed) to the motor shell is >100K ohms. *Refer to Figure 21.* (Measure to unpainted motor end plate.) If any motor lead fails this test, do not proceed to install the control module. **THE MOTOR IS DEFECTIVE AND MUST BE REPLACED.** Installing the new control module will cause it to fail also.
7. Verify that the replacement control is correct for the application. Refer to the manufacturer's authorized replacement list. **USING THE WRONG CONTROL WILL RESULT IN IMPROPER OR NO BLOWER OPERATION.** Orient the control module so that the 3-wire motor plug can be inserted into the socket in the control. Carefully insert the plug and press it into the socket until it latches. **A SLIGHT CLICK WILL BE HEARD WHEN PROPERLY INSERTED.**
8. Reverse Steps #5, 4, 3 to reconnect the motor control to the motor wires, secure the motor control cover plate, mount the control to the bracket and mount the motor control bracket back into the unit. **MAKE SURE THE ORIENTATION SELECTED FOR REPLACING THE CONTROL ASSURES THE CONTROL'S CABLE CONNECTORS WILL BE LOCATED DOWNWARD IN THE APPLICATION SO THAT WATER CANNOT RUN DOWN THE CABLES AND INTO THE CONTROL.** ***DO NOT OVERTIGHTEN THE BOLTS.***
9. Plug the 16-pin control plug into the motor. The plug is keyed. Make sure the connector is properly seated and latched.
10. Plug the 5-pin power connector into the motor. Even though the plug is keyed, **OBSERVE THE PROPER ORIENTATION. DO NOT FORCE THE CONNECTOR.** It plugs in very easily when properly oriented. **REVERSING THIS PLUG WILL CAUSE IMMEDIATE FAILURE OF THE CONTROL MODULE.**
11. Final installation check. Make sure the motor is installed as follows:
    a. Motor connectors should be oriented between the 4 o'clock and 8 o'clock positions when the control is positioned in its final location and orientation.
    b. Add a drip loop to the cables so that water cannot enter the motor by draining down the cables. *Refer to Figure 22.*

The installation is now complete. Reapply the AC power to the HVAC equipment and verify that the new motor control module is working properly. Follow the manufacturer's procedures for disposition of the old control module.

Figure 20
Control Disassembly

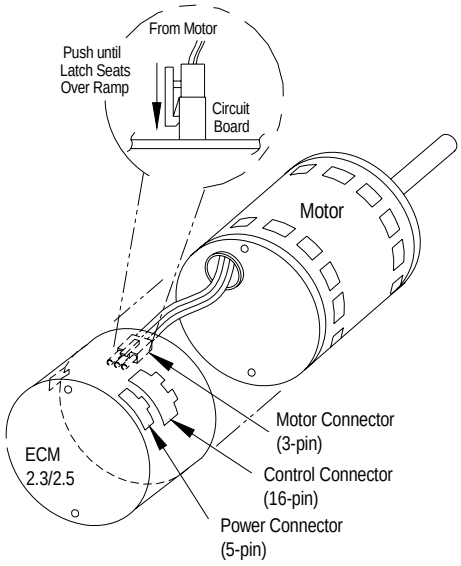

Figure 21
Winding Test

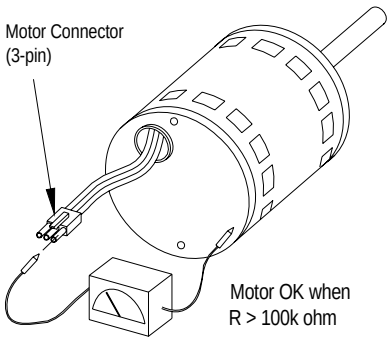

Figure 22
Drip Loop

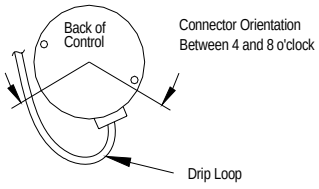

TABLE 13
Troubleshooting ECM™ Indoor Blower Motors

Mode of Operation	Off	Continuous Blower (Ventilation Mode)	Part Load Cooling	Full Load Cooling	Dehum. Mode (when equipped)	Part Load Heat Pump	Full Load Heat Pump	Heat Pump Full Load w/ 1st Bank of Elec. Heat	Emergency Heat Mode
Thermostat 24 VAC Input Signals	—	"G"	"G", "Y1"	"G", "Y1","Y2"	"D"	"G", "B", "Y1"	"G", "B", "Y1", "Y2"	"G", "Y1", "Y2", "B", "W2"	"G", "W2", "W3"
Pin #1	24 VAC "C" (Common) Signal, Always Energized								
Pin #2								X	
Pin #3	24 VAC "C" (Common) Signal, Always Energized								
Pin #4	Not Used								
Pin #5	Not Used								
Pin #6			X	X	X	X	X	X	
Pin #7	Not Used								
Pin #8	Not Used								
Pin #9						X	X	X	
Pin #10	Not Used								
Pin #11	Not Used								
Pin #12	24 VAC Hot "R" Signal, Always Energized								
Pin #13									X
Pin #14				X	X		X	X	
Pin #15		X	X	X	X	X	X	X	X
Pin #16	Not Used								

FIGURE 23
Control Connector Motor Half

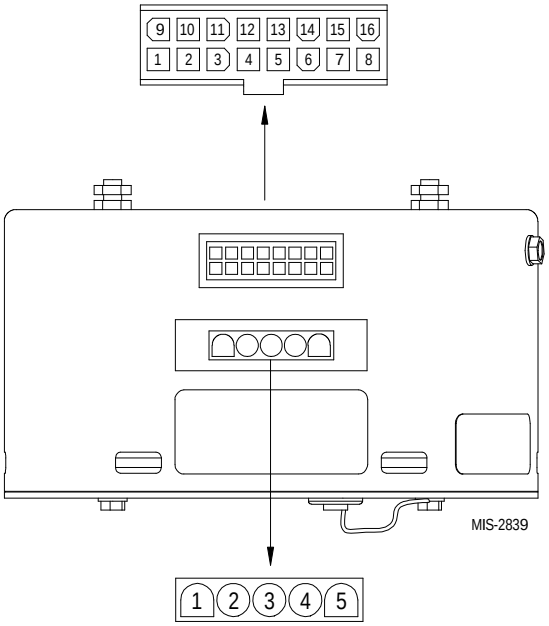

Power Connector Motor Half

Power Connector	
PWB Header	**AMP 1-350945-0**
PIN	**Description**
1	Jumper Pin 1 to Pin 2 for 120VAC Line Input Only **
2	
3	Chassis Ground
4	AC Line
5	AC Line

* Suggested mating connector
Housing – AMP 350809-1
Contact – AMP 350537-1

** ***WARNING:*** *Applying 240VAC line input with PIN 1 to PIN 2 jumper in place will permanently damage unit!*

Fan Blade Setting Dimensions

The position of the fan blade should be set at 2.75", measuring from the motor mount to the closest point on the fan blade (as shown in Figure 24). Spin the blade by hand to make sure it does not hit the ring.

FIGURE 24
Fan Blade Position

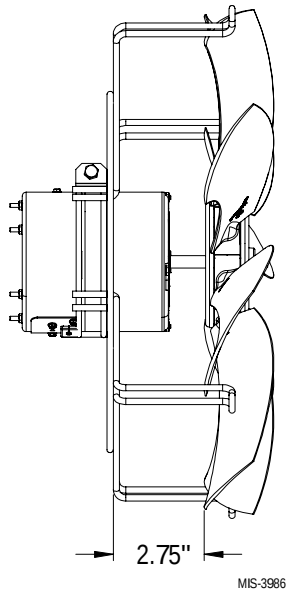

Refrigerant Charge

This unit was charged at the factory with the quantity of refrigerant listed on the serial plate. AHRI capacity and efficiency ratings were determined by testing with this refrigerant charge quantity. The following pressure tables show nominal pressures and temperatures for the units. Since many installation specific situations can affect the pressure readings, this information should only be used by certified technicians as a guide for evaluating proper system performance. They shall not be used to adjust charge. If charge is in doubt, reclaim, evacuate and recharge the unit to the serial plate charge.

TABLE 14A
Cooling Pressures – Rated Airflow

Air Temperature Entering Outdoor Coil °F

Model	Return Air Temp.	Pressure	75°	80°	85°	90°	95°	100°	105°	110°	115°	120°	125°
I36Z2	75° DB	Low Side	135	136	137	138	139	140	141	143	144	145	147
	62° WB	High Side	300	317	336	356	376	399	422	446	472	498	526
	80° DB	Low Side	145	145	146	147	149	150	151	152	154	155	157
	67° WB	High Side	308	325	345	365	386	409	433	458	484	511	540
	85° DB	Low Side	150	151	152	153	154	155	156	158	159	161	163
	72° WB	High Side	318	337	357	378	400	423	448	474	501	529	559
I42Z2	75° DB	Low Side	132	133	134	135	136	137	139	140	141	142	144
	62° WB	High Side	313	332	352	373	395	417	441	465	490	516	542
	80° DB	Low Side	141	142	143	144	146	147	148	149	151	152	154
	67° WB	High Side	321	341	361	382	405	428	452	477	502	529	556
	85° DB	Low Side	146	147	148	150	151	152	153	155	156	157	159
	72° WB	High Side	332	352	374	396	419	443	468	493	520	547	576
I48Z2	75° DB	Low Side	133	134	135	136	137	138	139	140	141	142	143
	62° WB	High Side	324	344	366	388	411	434	458	482	508	533	560
	80° DB	Low Side	142	143	144	145	147	148	149	150	151	152	153
	67° WB	High Side	332	353	375	398	421	445	469	495	521	547	574
	85° DB	Low Side	147	148	149	151	152	153	154	155	156	157	158
	72° WB	High Side	344	366	388	412	436	461	486	512	539	566	594
I60Z2	75° DB	Low Side	127	128	129	130	131	133	134	135	136	137	139
	62° WB	High Side	334	352	371	391	412	435	458	483	509	536	564
	80° DB	Low Side	136	137	138	139	141	142	143	144	146	147	148
	67° WB	High Side	342	361	380	401	423	446	470	495	522	550	579
	85° DB	Low Side	141	142	143	144	145	147	148	149	151	152	154
	72° WB	High Side	354	373	393	415	438	461	487	513	540	569	599

Low side pressure ± 4 PSIG
High side pressure ± 10 PSIG

Tables are based upon rated CFM (airflow) across the evaporator coil. If there is any doubt as to correct operating charge being in the system, the charge should be removed and system evacuated and recharged to serial plate charge weight.

TABLE 14B
Heating Pressures – Rated Airflow

Air Temperature Entering Outdoor Coil °F

Model	Indoor Temp.	Pressure	0°	5°	10°	15°	20°	25°	30°	35°	40°	45°	50°	55°	60°	65°
I36Z2	70° DB	Low Side	27	37	46	55	63	71	79	86	93	99	105	111	116	120
		High Side	242	252	262	271	280	289	297	305	312	319	325	331	336	342
I42Z2	70° DB	Low Side	36	42	49	56	62	69	76	82	88	95	101	107	113	120
		High Side	254	263	271	279	287	294	301	308	314	320	326	331	336	341
I48Z2	70° DB	Low Side	35	42	49	56	63	69	76	83	90	97	103	110	116	123
		High Side	283	296	309	321	333	343	353	362	370	378	385	391	396	400
I60Z2	70° DB	Low Side	40	45	51	56	62	68	74	80	86	92	99	106	112	119
		High Side	275	285	295	305	314	323	331	339	347	354	361	368	374	380

TABLE 15A
Cooling Pressures – Part Load Airflow

Air Temperature Entering Outdoor Coil °F

Model	Return Air Temp.	Pressure	75°	80°	85°	90°	95°	100°	105°	110°	115°	120°	125°
I36Z2	75° DB	Low Side	138	140	140	141	142	144	145	146	147	149	150
	62° WB	High Side	241	273	291	309	329	350	372	395	419	445	471
	80° DB	Low Side	148	149	150	151	152	154	155	156	157	159	161
	67° WB	High Side	247	280	298	317	338	359	382	405	430	456	483
	85° DB	Low Side	153	155	156	157	158	159	160	162	163	165	166
	72° WB	High Side	255	290	308	328	349	372	395	420	445	472	500
I42Z2	75° DB	Low Side	133	136	137	139	140	142	143	144	146	147	149
	62° WB	High Side	248	283	302	322	343	364	386	409	433	457	482
	80° DB	Low Side	142	145	147	148	150	151	153	154	156	157	159
	67° WB	High Side	254	291	310	330	351	373	396	419	444	469	494
	85° DB	Low Side	147	150	152	154	155	157	158	160	161	163	164
	72° WB	High Side	263	301	321	342	364	386	410	434	459	485	512
I48Z2	75° DB	Low Side	135	138	139	140	141	143	144	145	146	148	149
	62° WB	High Side	258	291	309	328	348	369	391	413	437	461	486
	80° DB	Low Side	145	147	149	150	151	152	154	155	156	158	159
	67° WB	High Side	264	299	317	337	357	379	401	424	448	473	499
	85° DB	Low Side	150	152	154	155	156	158	159	161	162	163	165
	72° WB	High Side	274	309	328	349	370	392	415	439	464	489	516
I60Z2	75° DB	Low Side	126	128	130	131	132	134	135	137	138	140	141
	62° WB	High Side	327	330	336	345	357	371	388	408	431	456	485
	80° DB	Low Side	134	137	139	140	142	143	145	146	148	149	151
	67° WB	High Side	336	339	345	354	366	380	398	418	442	468	497
	85° DB	Low Side	139	142	144	145	147	148	150	151	153	154	156
	72° WB	High Side	347	351	357	366	378	394	412	433	457	484	514

Low side pressure ± 4 PSIG
High side pressure ± 10 PSIG

Tables are based upon rated CFM (airflow) across the evaporator coil. If there is any doubt as to correct operating charge being in the system, the charge should be removed and system evacuated and recharged to serial plate charge weight.

TABLE 15B
Heating Pressures – Part Load Airflow

Air Temperature Entering Outdoor Coil °F

Model	Indoor Temp.	Pressure	0°	5°	10°	15°	20°	25°	30°	35°	40°	45°	50°	55°	60°	65°
I36Z2	70° DB	Low Side	25	35	45	55	64	73	82	90	98	106	114	121	128	135
		High Side	245	252	260	267	274	280	287	294	300	306	312	318	324	330
I42Z2	70° DB	Low Side	27	37	46	55	64	72	80	88	96	104	111	118	125	131
		High Side	242	251	260	268	276	284	292	299	306	313	319	325	330	336
I48Z2	70° DB	Low Side	27	36	46	55	64	73	81	89	97	105	113	120	127	134
		High Side	258	269	279	289	299	308	317	325	333	340	348	354	361	367
I60Z2	70° DB	Low Side	31	39	47	55	63	71	79	87	95	102	110	117	124	132
		High Side	258	267	277	286	295	304	312	321	330	338	347	355	364	372