INSTALLATION INSTRUCTIONS

AGRI-TEC® Unit

Model: A36RYH

Bard®
SINCE 1914
Climate Control Solutions

Bard Manufacturing Company, Inc.
Bryan, Ohio 43506
www.bardhvac.com

Manual: 2100-772B
Supersedes: 2100-772A
Date: 12-8-23

CONTENTS

AGRI-TEC Wall-Mount Model Nomenclature..... 3

Safety Instructions 4

General Information 10
- General 10
- Shipping Damage 10
- Additional Publications 10
- Duct Work..... 11
- Filters..... 11

Installation 12
- Basic Installation Design and Application Planning..... 12
  - Wall Construction 12
  - Outdoor Area Inspection..... 12
  - Condensate Water Drainage 12
- Indoor Ducted and Non-Ducted Applications 12
  - Indoor Supply Airflow..... 12
  - Indoor Return Airflow..... 13
  - Ducted Applications 13
  - Free Blow Applications..... 13
  - Thermostat or Indoor Temperature Sensor Placement 13
- Unit Installation 13
  - Materials/Tool List 13
  - Wall Preparation..... 14
  - Wall Mount Installation to Wall Surface 14
- Wiring – Main Power 19
- Wiring – Low Voltage..... 19
  - Low Voltage Connections..... 19
  - Unit Shutdown Feature 19

Start Up 21
- General 21
- Topping Off System Charge..... 21
- Safety Practices 21
- Important Installer Note 21
- Pressure Service Ports..... 22
- Compressor Control Module 22
  - Delay-on-Make Timer 22
  - Short Cycle Protection/Delay-on-Break 22
  - Low Pressure Detection..... 22
  - High Pressure Detection..... 22
  - Test Mode..... 22
  - Brownout Protection with Adjustment..... 22
- Condenser Fan Operation 23
- Sequence of Operation..... 23
  - Cooling..... 23
  - Heating 23
  - Dehumidification..... 24
  - High Pressure Switch Operation..... 24
- Hot Gas Bypass 24
  - Bypass to Evaporator Inlet with Distributor..... 24
  - Externally Equalized Bypass Valves 24
  - Shutoff Valve 24

Service 27
- Fan Blade Setting Dimensions..... 27
- Removal of Fan Shroud..... 27
- R-410A Refrigerant Charge 27
- Service Hints 27
- Unit Airflow 27
- Dirty Filter Switch 27
  - Dirty Filter Switch Adjustment 29
- Manually Opened Fresh Air Damper 30
- Troubleshooting ECM™ 142R Outdoor Fan Motors..32
  - Troubleshooting Fan Logic Control..... 33
  - Replacing the Motor 33
- Checking Temperature Sensor 34
- Low Ambient Control (LAC)..... 34
- Troubleshooting ECM™ Indoor Blower Motors 35
  - Moisture Check 35
  - Comfort Check 35
  - Replacing ECM Control Module..... 35

TABLES

Table 1 Clearance Required for Service Access and Adequate Condenser Airflow..... 14
Table 2 Thermostat Wire Size..... 19
Table 3 Fan Blade Dimension 27
Table 4 Troubleshooting ECM™ 142R Outdoor Fan Motor 33
Table 5 Cooling Mode..... 35
Table 6 Temperature (F) vs. Resistance (R) of Temperature Sensor..... 34
Table 7 Electrical Specifications 37
Table 8 Electric Heat 37
Table 9 Cooling Pressures..... 38
Table 10 Low Voltage Inputs for Unit Operational Modes 39

FIGURES

Figure 1 Unit Dimensions 15
Figure 2 AGRI-TEC Mounting Instructions 16
Figure 3 Wall Mounting Instructions 17
Figure 4 Wall Mounting Instructions 18
Figure 5 Low Voltage Connections..... 20
Figure 6 Compressor Control Module..... 23
Figure 7 Hot Gas Bypass..... 25
Figure 8 Hot Gas Bypass Troubleshooting 26
Figure 9 Fan Blade Setting 27
Figure 10 Dirty Filter Switch, Dirty Filter Indicator Light and Dirty Filter Reset Switch 28
Figure 11 Adjusting Dirty Filter Switch..... 29
Figure 12 Manually Opened Fresh Air Damper 31
Figure 13 Control Disassembly 36
Figure 14 Winding Test..... 36
Figure 15 Drip Loop 36
Figure 16 Electric Heat Wiring 40

AGRI-TEC Wall-Mount Model Nomenclature

A 36 R Y H A 15 X P X X X X

MODEL SERIES
A – AGRI-TEC

NOMINAL CAPACITY
36 – 3 Ton

TYPE AND CONTROL LOCATION
R – Reverse Airflow Air Conditioner with Left Side Control Panel

REVISION

PLACEHOLDER
H – Hot Gas Bypass

ELECTRICAL
A – 230/208/60/1
D – 240/220/50/1

ELECTRIC HEAT
15 – 15Kw with Circuit Breaker

VENT PACKAGE
X – Manual Fresh Air Damper, No Exhaust
B – Blank-Off Plate

FILTER
P – 2" MERV 8
M – 2" MERV 11
N – 2" MERV 13

COLOR AND CABINET FINISH
X – Beige
1 – White
4 – Gray

SUPPLY OUTLET
X – Standard Front Outlet

COIL AND UNIT COATING OPTIONS
X – Standard
1 – Phenolic Coated Evaporator
2 – Phenolic Coated Condenser
3 – Phenolic Coated Evaporator and Condenser

ACCESSORIES AND CONTROL OPTIONS
X – Standard Controls (High Pressure Switch, Low Pressure Switch, Compressor Control Module, Low Ambient Control and Filter Indicator Light)

SAFETY INSTRUCTIONS

READ ALL INSTRUCTIONS BEFORE USE

Your safety and the safety of others are very important.
We have provided many important safety messages in this manual and on your appliance. Always read and follow all safety messages.

ANSI Z535.5 Definitions:

DANGER: Indicate[s] a hazardous situation which, if not avoided, will result in death or serious injury. The signal word "DANGER" is to be limited to the most extreme situations. DANGER [signs] should not be used for property damage hazards unless personal injury risk appropriate to these levels is also involved.

WARNING: Indicate[s] a hazardous situation which, if not avoided, could result in death or serious injury. WARNING [signs] should not be used for property damage hazards unless personal injury risk appropriate to this level is also involved.

CAUTION: Indicate[s] a hazardous situation which, if not avoided, could result in minor or moderate injury. CAUTION [signs] without a safety alert symbol may be used to alert against unsafe practices that can result in property damage only.

NOTICE: [this header is] preferred to address practices not related to personal injury. The safety alert symbol shall not be used with this signal word. As an alternative to "NOTICE" the word "CAUTION" without the safety alert symbol may be used to indicate a message not related to personal injury.

DANGER

WARNING

CAUTION

NOTICE

NOTICE

APPLIANCE ACCESSIBLE TO THE GENERAL PUBLIC.

WARNING

Electrical shock hazard.

Do not operate this equipment without an earth ground attached and always disconnect the remote electric power supplies before servicing.

Electrical shock can result in serious injury or death.

WARNING

Heavy item hazard.

Use more than one person to handle unit.

Failure to do so could result in unit damage or serious injury.

⚠ WARNING

Electrical shock hazard.

Have a properly trained individual perform these tasks.

Failure to do so could result in electric shock or death.

⚠ CAUTION

Sharp metallic edges.

Take care and wear appropriate protective devices to avoid accidental contact with sharp edges.

Failure to do so can result in personal injury.

The following symbols are displayed on units.

This symbol indicates that the Operation Manual should be read carefully.

This symbol indicates that a service personnel should be handling this equipment with reference to the Installation Manual.

This symbol indicates that information is available such as the Operation Manual or Installation Manual.

IMPORTANT SAFETY INSTRUCTIONS

WARNING

To reduce the risk of explosion, fire, death, electric shock, scalding or injury to persons when using this product, follow basic precautions, including the following:

GENERAL

- The equipment covered in this manual is to be installed by trained, experienced service and installation technicians.
- This appliance is not intended for use by persons (including children) with reduced physical, sensory or mental capabilities, or lack of experience and knowledge, unless they have been given supervision or instruction concerning use of the appliance by a person responsible for their safety.
- The refrigerant system is completely assembled and charged. All internal wiring is complete.
- The unit is designed for use with or without duct work. Flanges are provided for attaching the supply and return ducts.
- These instructions explain the recommended method to install the air-cooled self-contained unit and the electrical wiring connections to the unit.
- These instructions and any instructions packaged with any separate equipment required to make up the entire air conditioning system should be carefully read before beginning the installation. Note particularly "Starting Procedure" and any tags and/or labels attached to the equipment.
- While these instructions are intended as a general recommended guide, they do not supersede any national and/or local codes in any way. Authorities having jurisdiction should be consulted before the installation is made. See Additional Publications for information on codes and standards.
- Size of unit for a proposed installation should be based on heat loss calculation made according to methods of Air Conditioning Contractors of America (ACCA). The air duct should be installed in accordance with the Standards of the National Fire Protection Association for the Installation of Air Conditioning and Ventilating Systems of Other Than Residence Type, NFPA No. 90A, and Residence Type Warm Air Heating and Air Conditioning Systems, NFPA No. 90B. Where local regulations are at a variance with instructions, installer should adhere to local codes.

INSTALLATION

- This product is not intended for use at altitudes exceeding 2,000 meters (6,561 feet). For appliances intended for use at altitudes exceeding 2 000 m (6,561 feet), the maximum altitude of use shall be stated.
- Before use, the appliance must be properly installed as described in this manual.
- Contact the authorized service technician for repair or maintenance of this unit.
- Contact the installer for installation of this unit.
- The air conditioner is not intended for use by young children or invalids without supervision.
- Young children should be supervised to ensure that they do not play with the air conditioner.
- Installation work must be performed in accordance with the National Electric Code by qualified and authorized personnel only.
- Connect to a properly rated, protected, and sized power circuit to avoid electrical overload.
- Adhere to all industry recommended safety procedures including the use of long-sleeved gloves and safety glasses.
- Use care when unpacking and installing. The edges of the product may be sharp.
- Keep packaging materials out of the reach of children. These materials can pose a suffocation risk to children.

OPERATION

- This appliance is not intended for use by persons (including children) with reduced physical, sensory, or mental capabilities, or lack of experience and knowledge, unless they have been given supervision or instruction concerning use of the appliance by a person responsible for their safety.
- Use this appliance only for its intended purpose.
- Never attempt to operate this appliance if it is damaged, malfunctioning, partially disassembled, or has missing or broken parts.
- Do not tamper with controls.

LIRE TOUTES LES INSTRUCTIONS AVANT UTILISATION

Votre sécurité et celle des autres sont très importantes.
Nous avons fourni de nombreux messages de sécurité importants dans ce manuel et sur votre appareil. Lisez et suivez toujours tous les messages de sécurité.

Définitions ANSI Z535.5 :

DANGER : Indique une situation dangereuse qui, si elle n'est pas évitée, entraînera certainement la mort ou des blessures graves. Le mot « DANGER » doit être limité aux situations extrêmes. Les indications « DANGER » ne doivent pas être utilisées pour les risques de dégâts matériels, à moins qu'il n'existe un risque concomitant de blessures corporelles.

AVERTISSEMENT : Indique une situation dangereuse qui, si elle n'est pas évitée, peut entraîner la mort ou des blessures graves. Les indications « AVERTISSEMENT » ne doivent pas être utilisées pour les risques de dégâts matériels, à moins qu'il n'existe un risque concomitant de blessures corporelles.

ATTENTION : Indique une situation dangereuse qui, si elle n'est pas évitée, peut entraîner des blessures mineures à modérées. Les indications « ATTENTION », sans symbole d'avertissement, peuvent être utilisées pour alerter sur des pratiques dangereuses pouvant entraîner des dégâts matériels uniquement.

REMARQUE : cet avis concerne les pratiques n'entraînant aucune blessure corporelle. Le symbole d'avertissement ne doit pas être utilisé avec ce mot. Comme alternative à « AVIS », le mot « ATTENTION » sans symbole d'avertissement peut être utilisé pour indiquer un message non lié à des blessures corporelles.

REMARQUE

APPAREIL ACCESSIBLE AU GRAND PUBLIC.

AVERTISSEMENT

Risque de choc électrique.

Ne pas faire fonctionner cet équipement sans qu'il soit relié à la terre et toujours débrancher les alimentations électriques avant de procéder aux opérations d'entretien.

Une électrisation peut entraîner des blessures graves ou la mort.

AVERTISSEMENT

Risque lié aux objets lourds.

Plusieurs personnes sont nécessaires à la manipulation de l'unité.

Le non-respect de cette consigne peut entraîner dégâts à l'unité ou des blessures graves.

⚠ AVERTISSEMENT

Risque de choc électrique.

Ces tâches doivent être réalisées par une personne parfaitement qualifiée et formée.

Le non-respect de cette consigne peut entraîner des chocs électriques ou la mort.

⚠ ATTENTION

Arêtes métalliques vives.

Faites attention et portez des dispositifs de protection appropriés pour éviter tout contact accidentel avec des arêtes vives.

Le non-respect de cette consigne peut entraîner des blessures corporelles.

Les symboles suivants sont affichés sur les unités.

Ce symbole indique que le manuel d'utilisation doit être lu attentivement.

Ce symbole indique qu'un membre du personnel de service devrait manipuler cet équipement en se référant au manuel d'installation.

Ce symbole indique que des informations sont disponibles telles que le manuel d'utilisation ou le manuel d'installation.

INSTRUCTIONS DE SÉCURITÉ IMPORTANTES

AVERTISSEMENT

Pour réduire le risque d'explosion, d'incendie, de décès, de choc électrique, d'échaudure ou de blessures pour les personnes lors de l'utilisation de ce produit, suivez les précautions de base, notamment les suivantes :

GÉNÉRALITÉS

- L'équipement couvert dans ce manuel doit être installé par des techniciens de service et d'installation formés et expérimentés.
- Cet appareil n'est pas destiné à être utilisé par des personnes (y compris des enfants) ayant des capacités physiques, sensorielles ou mentales réduites, ou un manque d'expérience et de connaissances, à moins qu'elles n'aient reçu la supervision ou l'instruction concernant l'utilisation de l'appareil par une personne responsable de leur sécurité.
- Le système de réfrigérant est complètement assemblé et chargé. Tout le câblage interne est complet.
- L'unité est conçue pour être utilisée avec ou sans conduits. Des brides sont prévues pour fixer les conduits d'alimentation et de retour.
- Ces instructions expliquent la méthode recommandée pour installer l'unité autonome refroidie à l'air et les connexions de câblage électrique à l'unité.
- Ces instructions et toutes les instructions emballées avec tout équipement distinct requis pour constituer l'ensemble du système de climatisation doivent être lues attentivement avant de commencer l'installation. Notez en particulier « Procédure de démarrage » et les étiquettes et / ou étiquettes attachées à l'équipement.
- Bien que ces instructions soient conçues comme un guide général recommandé, elles ne remplacent en aucune façon les codes nationaux et/ou locaux. Les autorités compétentes devraient être consultées avant que l'installation ne soit effectuée. Voir d'autres publications pour obtenir des renseignements sur les codes et les normes.
- La taille de l'unité pour une installation proposée devrait être basée sur le calcul de la perte de chaleur effectué selon les méthodes de Air Conditioning Contractors of America (ACCA). Le conduit d'air devrait être installé conformément aux Normes de la National Fire Protection Association for the Installation of Air Conditioning and Ventilating Systems of Other Than Residence Type, NFPA No. 90A, et aux Systèmes de chauffage et de climatisation d'air chaud de type résidence, NFPA No. 90B. Lorsque les réglementations locales sont en contradiction avec les instructions, l'installateur doit respecter les codes locaux.

L'INSTALLATION

- Ce produit n'est pas destiné à être utilisé à des altitudes supérieures à 2 000 mètres (6 561 pieds). Pour les appareils destinés à être utilisés à des altitudes supérieures à 2 000 m (6 561 pieds), l'altitude maximale d'utilisation doit être indiquée.
- Avant utilisation, l'appliance doit être correctement installée comme décrit dans ce manuel.
- Communiquez avec le technicien d'entretien autorisé pour la réparation ou l'entretien de cette unité.
- Contactez le programme d'installation pour l'installation de cet appareil.
- Le climatiseur n'est pas destiné à être utilisé par de jeunes enfants ou des invalides sans surveillance.
- Les jeunes enfants devraient être surveillés pour s'assurer qu'ils ne jouent pas avec le climatiseur.
- Les travaux d'installation doivent être effectués conformément au Code national de l'électricité par du personnel qualifié et autorisé uniquement.
- Connectez-vous à un circuit d'alimentation correctement évalué, protégé et dimensionné pour éviter les surcharges électriques.
- Respectez toutes les procédures de sécurité recommandées par l'industrie, y compris l'utilisation de gants à manches longues et de lunettes de sécurité.
- Faites attention lors du déballage et de l'installation. Les bords du produit peuvent être tranchants.
- Gardez les matériaux d'emballage hors de la portée des enfants. Ces matériaux peuvent poser un risque d'étouffement pour les enfants.

OPÉRATION

- Cet appareil n'est pas destiné à être utilisé par des personnes (y compris des enfants) ayant des capacités physiques, sensorielles ou mentales réduites, ou un manque d'expérience et de connaissances, à moins qu'elles n'aient reçu une supervision ou une instruction concernant l'utilisation de l'appareil par une personne responsable de leur sécurité.
- Utilisez cet appareil uniquement aux fins prévues.
- N'essayez jamais de faire fonctionner cet appareil s'il est endommagé, défectueux, partiellement démonté ou s'il a des pièces manquantes ou cassées.
- Ne pas altérer les contrôles.

GENERAL INFORMATION

General

The equipment covered in this manual is to be installed by trained, experienced service and installation technicians.

This appliance is not intended for use by persons (including children) with reduced physical, sensory or mental capabilities, or lack of experience and knowledge, unless they have been given supervision or instruction concerning use of the appliance by a person responsible for their safety.

Children should be supervised to ensure that they do not play with the appliance.

The refrigerant system is completely assembled and charged. All internal wiring is complete.

The unit is designed for use with or without duct work. Flanges are provided for attaching the supply and return ducts.

These instructions explain the recommended method to install the air cooled self-contained unit and the electrical wiring connections to the unit.

These instructions and any instructions packaged with any separate equipment required to make up the entire air conditioning system should be carefully read before beginning the installation. Note particularly "Starting Procedure" and any tags and/or labels attached to the equipment.

While these instructions are intended as a general recommended guide, they do not supersede any national and/or local codes in any way. Authorities having jurisdiction should be consulted before the installation is made. See **Additional Publications** for information on codes and standards.

Size of unit for a proposed installation should be based on heat loss calculation made according to methods of Air Conditioning Contractors of America (ACCA). The air duct should be installed in accordance with the Standards of the National Fire Protection Association for the Installation of Air Conditioning and Ventilating Systems of Other Than Residence Type, NFPA No. 90A, and Residence Type Warm Air Heating and Air Conditioning Systems, NFPA No. 90B. Where local regulations are at a variance with instructions, installer should adhere to local codes.

Shipping Damage

Upon receipt of equipment, the carton should be checked for external signs of shipping damage. If damage is found, the receiving party must contact the last carrier immediately, preferably in writing, requesting inspection by the carrier's agent.

Additional Publications

These publications can help when installing the air conditioner. They can usually be found at the local library or purchased directly from the publisher. Be sure to consult the current edition of each standard.

National Electrical Code ..... ANSI/NFPA 70

Standard for the Installation of Air Conditioning and Ventilating Systems
..... ANSI/NFPA 90A

Standard for Warm Air Heating and Air Conditioning Systems
..... ANSI/NFPA 90B

Load Calculation for Winter and Summer Air Conditioning
..... ACCA Manual J Residential

Duct Design for Residential Winter and Summer Air Conditioning and Equipment Selection
..... ACCA Manual D

For more information, contact these publishers:

ACCA **Air Conditioning Contractors of America**
1712 New Hampshire Ave. N.W.
Washington, DC 20009
Telephone: (202) 483-9370
Fax: (202) 234-4721

ANSI **American National Standards Institute**
11 West Street, 13th Floor
New York, NY 10036
Telephone: (212) 642-4900
Fax: (212) 302-1286

ASHRAE **American Society of Heating, Refrigeration and Air Conditioning Engineers, Inc.**
1791 Tullie Circle, N.E.
Atlanta, GA 30329-2305
Telephone: (404) 636-8400
Fax: (404) 321-5478

NFPA **National Fire Protection Association**
Batterymarch Park
P.O. Box 9101
Quincy, MA 02269-9901
Telephone: (800) 344-3555
Fax: (617) 984-7057

Duct Work

All duct work, supply and return, must be properly sized for the design airflow requirement of the equipment. Air Conditioning Contractors of America (ACCA) is an excellent guide to proper sizing. All duct work or portions thereof not in the conditioned space should be properly insulated in order to both conserve energy and prevent condensation or moisture damage.

Design the duct work according to methods given by the Air Conditioning Contractors of America (ACCA). When duct runs through unheated spaces, it should be insulated with a minimum of 1" of insulation. Use insulation with a vapor barrier on the outside of the insulation. Flexible joints should be used to connect the duct work to the equipment in order to keep the noise transmission to a minimum.

Model series A36RYH is approved for 0" clearance to the supply duct. See wall mount installation instructions beginning on page 12 and Figures 2 – 4 (pages 16 – 18) for further details.

Ducts through the walls must be insulated and all joints taped or sealed to prevent air or moisture entering the wall cavity.

Some installations may not require a return air duct. A metallic return air grille is required with installations not requiring a return air duct. The spacing between louvers on the grille shall not be larger than 5/8".

Any grille that meets with 5/8" louver criteria may be used. It is recommended that Bard Return Air Grille Kits RG3 or RFG3 be installed when no return duct is used. Contact distributor or factory for ordering information. If using a return air filter grille, filters must be of sufficient size to allow a maximum velocity of 400 fpm.

NOTE: *If no return air duct is used, applicable installation codes may limit this cabinet to installation only in a single story structure.*

Filters

A 2" pleated filter is standard with each unit. The filter slides into position making it easy to service. This filter can be serviced from the outside by opening the hinged filter access door or damper hood assembly on the left-hand side of the unit. Additional 2" filters are also available as optional accessories.

Basic Installation Design and Application Planning

Successful unit installations require proper planning and site inspection before installation begins. Before installing the wall mount unit, make sure that all service and airflow clearances are met and that the unit can meet all applicable code and regulation requirements. Provide an inspection of both the inside and outside of the structure by reviewing floorplans and/or visiting the installation site.

Wall Construction

The wall must be inspected to ensure that the weight of the unit can be supported. Be sure to review all applicable construction codes and regulations including seismic requirements. When inspecting wood frame walls, the wall construction must be strong and rigid enough to carry the weight of the unit without transmitting any unit vibration. It is important that the side unit wall mounting lags and optional bottom bracket are supported by structural members inside the wall cavity. Concrete block and brick walls must be thoroughly inspected to ensure that they are capable of carrying the weight of the installed unit. Metal buildings must contain structural components to support the unit weight. If heavily corrugated siding is present, it may need to be trimmed and flashed similar to a window to provide a flat, even surface to attach and seal the unit to the wall. Heavy gauge corrugations that would be present on shipping containers and blast-proof structures may require the installation of a metal plate over the corrugated area. It is important that the unit area is weatherized and sealed to avoid air and water infiltration into the area between the unit and the wall.

Outdoor Area Inspection

Inspect the outdoor area of the jobsite or review construction plans and locate the area where the wall mount is to be installed. The outdoor area must be free from obstructions including fences, bushes and walls that will hinder unit operation regarding outdoor condenser airflow and unit serviceability. Do not install units in enclosed areas that limit the amount of ambient temperature airflow. Warm air will exit the front condenser section of the unit, and outdoor ambient temperature air must be able to enter side intake condenser openings of the unit. Portable or modular building placement must be in a way that the wall mount units have a constant supply of outdoor air for proper unit operation. Make sure that the service panels of the unit are accessible. Inspect wall surfaces for obstructions that could hinder unit installation and servicing including outdoor electrical conduits, junction boxes, wall drains, vent hoods, windows, doors, overhangs and posts.

Condensate Water Drainage

Review all codes and requirements for unit condensate drainage. **A clear, flexible PVC drain hose (3/4" ID, 1" OD) is coiled in the unit for shipping and must be routed through one of the provided knockouts before unit startup.** Before routing the drain line, install the provided 1.5" universal bushing in the knockout opening to protect the drain line from abrasion. This will be located in the bottom of the unit control panel. The Bard AGRI-TEC unit includes a knockout in the unit back above the unit supply to allow the drain line to be routed into the building for condensate collection systems. A second knockout option is also supplied towards the back of the condenser partition, with a corresponding hole in the unit base for the drain hose to pass through. In this configuration, the hose will extend 1" to 2" below the unit base. Water removed from the indoor air (condensate) will be expelled from the unit in large amounts during cooling operation through the hose. Units running in cooling operation in cold outdoor (below freezing) conditions can cause the condensate to freeze after leaving the drain hose. In the event the drain hose is connected to a drain system of some type, it must be an open or vented type system to ensure proper drainage throughout seasonal use.

Indoor Ducted and Non-Ducted Applications

Air distribution inside the structure being conditioned plays an important role in making sure the area is a consistent temperature. Improper air distribution can result in areas being cooler or warmer, electrical equipment not receiving sufficient airflow or occupancy discomfort felt inside an area. Thermostat or indoor temperature sensor placement inside the area being conditioned also plays an important role in indoor climate control.

Indoor Supply Airflow

Indoor installation areas must provide a non-restrictive path for the conditioned supply air to leave supply grilles and registers. Inspect the area to ensure that all indoor portions of the room or rooms will have access to supply air. Ductwork may be used to ensure proper air circulation and all provided ductwork guidelines and clearances must be followed. Non-ducted applications must use a supply louver grille installed over the supply opening inside the room. Be sure to adjust supply deflectors to properly disperse the conditioned supply air to all parts of the room. Avoid closing sections of the supply grilles which would cause unneeded supply duct pressurization.

Indoor Return Airflow

A non-restrictive path for room air returning to the top section of the unit must be provided inside the room. Avoid placing objects including furniture, electronics equipment, equipment racks and cabinets directly in front of the unit return grilles and registers. Bard recommends at least 2' between solid objects and return grilles or registers. Ductwork may be used to ensure proper air circulation and all provided ductwork guidelines and clearances must be followed. Non-ducted applications must use a return louver grille installed over the return opening inside the room.

Ducted Applications

Field fabricated supply and return duct work may be installed inside the structure being conditioned. A short supply and/or return stub duct may be connected to the unit supply and return flanges before unit installation to help with duct connections inside the structure. Supply and return ducts must be properly sized for the design airflow requirement of the equipment. Air Conditioning Contractors of America (ACCA) is an excellent guide to proper sizing. All duct work or portions thereof not in the conditioned space should be properly insulated in order to conserve energy, reduce heat conductivity, and prevent condensation or moisture damage. Design the duct work according to methods given by the Air Conditioning Contractors of America (ACCA). When duct work is installed in unheated spaces, it should be insulated with a minimum of 1" of insulation. Use insulation with a vapor barrier on the outside of the insulation. Flexible joints should be used to connect the duct work to the equipment in order to keep the noise transmission to a minimum. Ducts through the walls must be insulated and all joints taped or sealed to prevent air or moisture from entering the wall cavity.

Free Blow Applications

Some installations may not require extensive supply duct work throughout the structure and are referred to as free blow applications. A short field-fabricated supply duct must be used in the wall cavity to transition between the supply collar on the unit and the supply louver grille in the room. The duct must be properly insulated in order to conserve energy, reduce heat conductivity and prevent condensation or moisture damage. All joints must be taped or sealed to prevent air or moisture entering the wall cavity. Follow all clearances including distances to combustible materials and all instructions provided in this manual. A non-restrictive metallic supply air grille with deflectors is required for free blow applications. Contact the local Bard distributor or visit www.bardhvac.com for ordering information.

A metallic return air grille is required for non-ducted applications. The spacing between louvers on the grille shall not be larger than 5/8". It is recommended that a Bard Return Air Grille Kit be installed that is designed specifically for the wall mount product. Contact the local Bard distributor or visit www.bardhvac.com for ordering information. A field-supplied return grille that meets the 5/8" louver criteria and does not cause the unit to exceed the maximum specified external static pressure (ESP) may be used. If using a return air filter grille, filters must be of sufficient size to allow a maximum velocity of 400 fpm. Filter return air grilles do not filter air being brought into the structure through ventilation options including fresh air dampers, ventilators, economizers and energy recovery ventilators. Be sure to install the return grille with the louvers pointed upwards towards the ceiling. This will help ensure return air is drawn down from the ceiling and improve air circulation in the room.

NOTE: *If no return air duct is used, applicable installation codes may limit this cabinet to installation only in a single story structure.*

Thermostat or Indoor Temperature Sensor Placement

The location and installation of the thermostat or temperature sensor that monitors indoor temperature is very important regarding unit operation. Avoid placing the thermostat in an area exposed to direct sunlight or air from doorways leading outdoors. Use a piece of insulating material to close off conduit openings or holes in the wall surface for wire entry into the thermostat or temperature sensor. This will help avoid non-conditioned air from entering the thermostat and effecting temperature and/or humidity readings. As common practice, the thermostat or temperature sensor should measure the temperature of the air being returned to the unit, and not the conditioned air being supplied by the unit. Placing the thermostat or temperature sensor near a return air opening will normally result in optimal unit performance.

Unit Installation

Make sure to have the proper tools at the work site that are needed for unit installation. The following steps are provided to ensure the unit is installed properly to the wall surface, and that the unit will provide years of service with minimal service requirements.

Materials/Tools List

Additional hardware and miscellaneous supplies are needed for installation. These items are field supplied and must be sourced before installation. This list also includes tools needed for installation.

- Appropriate safety gear including gloves and safety glasses
- 5/16" hex bit with drill driver
- Phillips head screwdriver
- Small straight (thermostat) screwdriver
- Tape measure

- Leveling device
- Two (2) tubes of caulk and caulk gun
- Utility knife
- Tools for cutting holes in the wall surface (if needed)
- Electrical components and wiring along with electrical tools
- Multimeter
- Wall fasteners for side flanges, bottom mounting bracket and top rain flashing.
- Duct tape and/or other duct sealing materials.

Wall Preparation

1. Two holes for the supply and return air openings must be cut through the wall as shown in Figure 2 on page 16. Be sure the openings are square and level. Follow all clearances including distances to combustible materials and all instructions provided in this manual.
2. Review all electrical requirements provided in this manual and plan out electrical entrances into the building. Also plan electrical conduit routing and thermostat placement, if necessary.
3. Install necessary duct work and prepare the openings for unit installation.
4. Clean the exterior wall where the unit is to be installed and make sure it is able to provide a smooth, level, debris-free surface. Remove all construction debris from the supply, return and electrical hole cutting process.

Wall Mount Installation to Wall Surface

1. Remove packaging from unit and make sure unit is not damaged before installation. A top rain flashing is supplied for field use and is mounted to the back of the unit for shipping. Remove rain flashing before locating the unit against wall. Top rain flashing is required to avoid water entering the area behind the unit that is against the wall. A bottom mounting bracket, attached to the skid for shipping, is provided for ease of installation but is not required. Review all requirements listed on unit labels and on serial plate located on the side of the unit.
2. Locate and mark bolt hole locations and bottom mounting bracket location. Install bottom mounting bracket with field-supplied fasteners to wall if it is to be used (optional). Bracket must be level and installed in the correct location to help support the unit during the installation process (see Figure 2).
3. Position the wall mount unit close to the wall surface where it will be installed. Install rain flashing at the top of the unit facing the wall by hooking the hem bend into the rear bend of the unit top (see Figure 2).
4. Apply a liberal amount of caulk on left and right cabinet side wall mount brackets and back of top rain flashing. Place unit back surface flush against wall. Unit must be level to ensure proper condensate drainage. Optional bottom bracket may be used to help support the unit.
5. Units are secured to the wall by using field-supplied fasteners along each side of the wall mount through the built-in wall mounting brackets. It is the responsibility of the installer to select the proper fastener to secure the unit to the wall based on wall construction and applicable building codes. Typical installations may include 5/16" fasteners with 7/8" diameter flat washers. Be sure unit is securely mounted and all weight-bearing fasteners are attached to the weight supporting structural members of the wall.
6. Apply a bead of caulk between the back of the unit top and the front surface of the top rain flashing (see Figure 2).
7. Connect unit duct work from the inside of the building following all clearances and instructions provided. For additional mounting rigidity, the return air and supply air frames or collars can be drilled and screwed or welded to the structural wall itself (depending upon wall construction). Be sure to use code approved duct tape or other sealing materials to seal the duct work to the unit.
8. On side-by-side installations, maintain a minimum of 20" clearance on left side to allow access to control panel and damper hood, and to allow proper airflow to the outdoor coil. Additional clearance may be required to meet local or national codes.

TABLE 1
Clearance Required for Service Access and Adequate Condenser Airflow

Model	Left Side	Right Side	Discharge Side
A36RYH	20"	15"	10'

1. Follow all national, state, and local codes and regulations regarding the installation of heating and cooling equipment regarding Single Packaged Vertical Units (SPVU) including electrical access clearances.
2. Bard recommends a minimum of 10' between the unit front condenser air outlet and solid objects including fences, walls, bushes and other airflow obstructions.
3. Bard recommends a minimum of 15' between the condenser air outlets of two units that are facing each other.

FIGURE 1
Unit Dimensions

Model	Width (W)	Depth (D)	Height (H)	Supply		Return																		
				C	Y	A	Y	B	E	F	G	J	K	L	M	N	P	Q	R	S	T	U	X	Z
A36RYH	38.20	25.50	75.94	7.88	27.88	13.78	27.78	17.86	32.32	45.56	30.47	29.43	5.94	12.00	8.61	42.99	39.10	7.37	35.95	33.95	31.48	22.40	47.52	3.53

All dimensions are in inches. Dimensional drawings are not to scale.

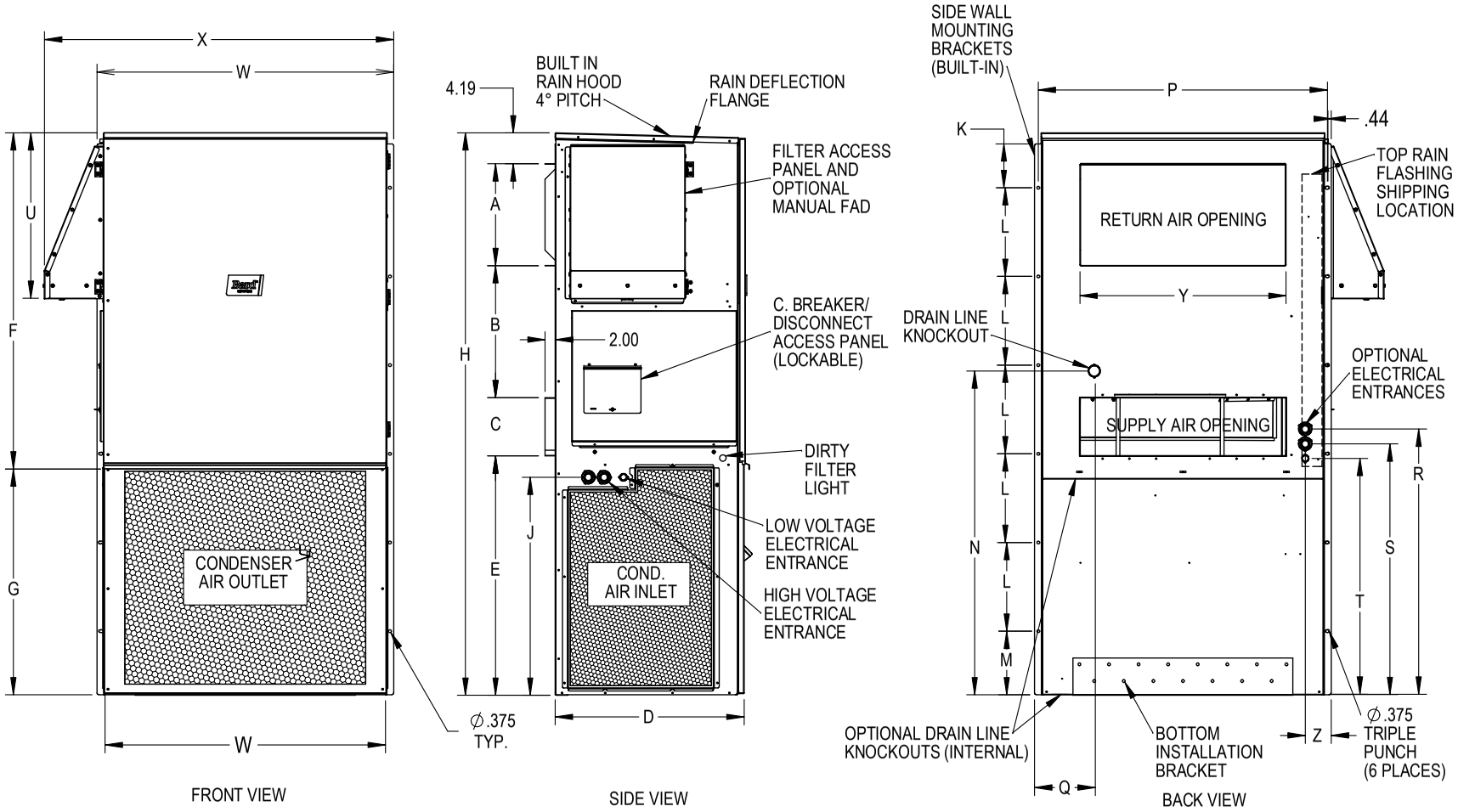

FIGURE 2
AGRI-TEC
Mounting Instructions

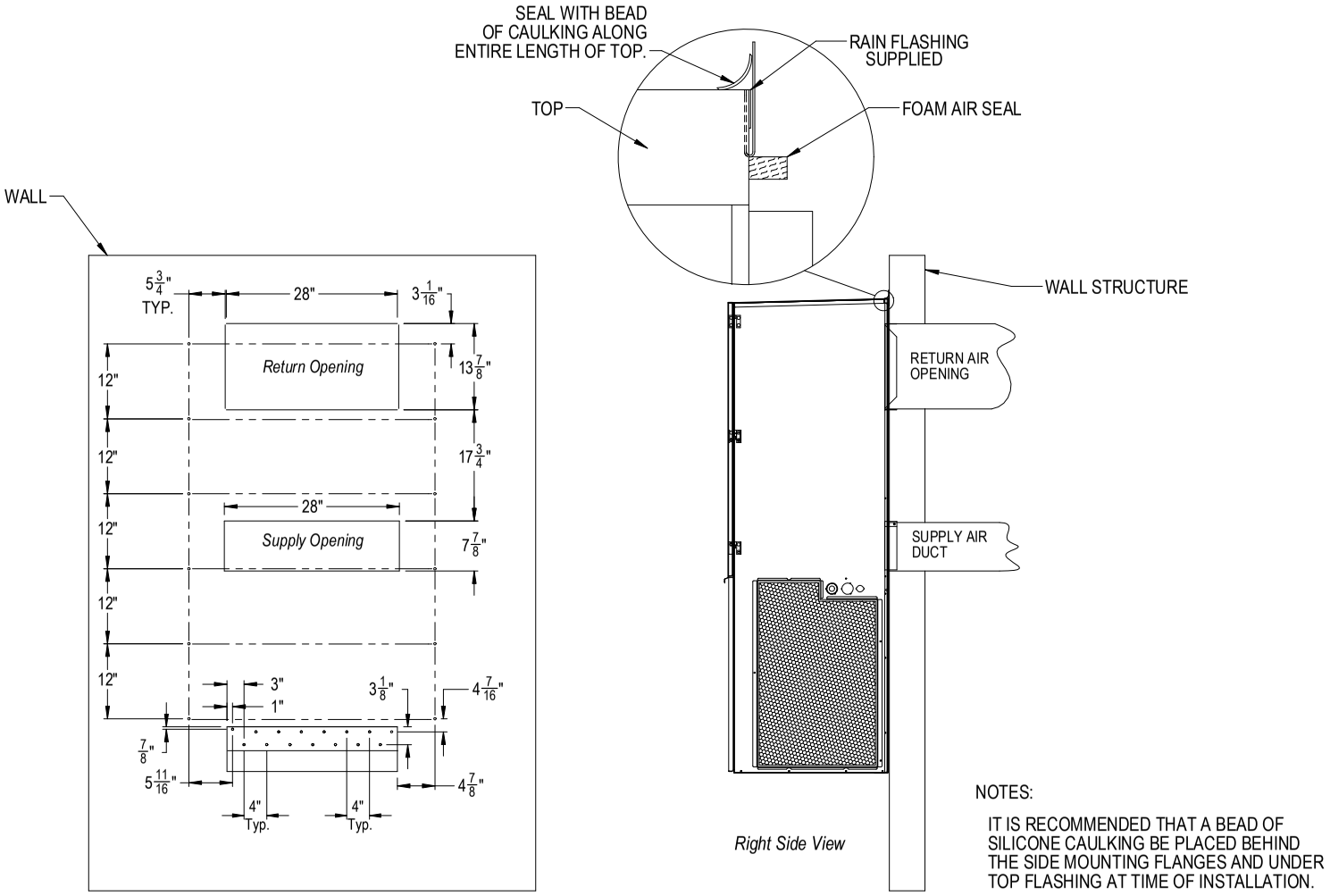

Wall Opening and Hole Location View

NOTES:

IT IS RECOMMENDED THAT A BEAD OF SILICONE CAULKING BE PLACED BEHIND THE SIDE MOUNTING FLANGES AND UNDER TOP FLASHING AT TIME OF INSTALLATION.

MIS-4398

FIGURE 3
Wall Mounting Instructions

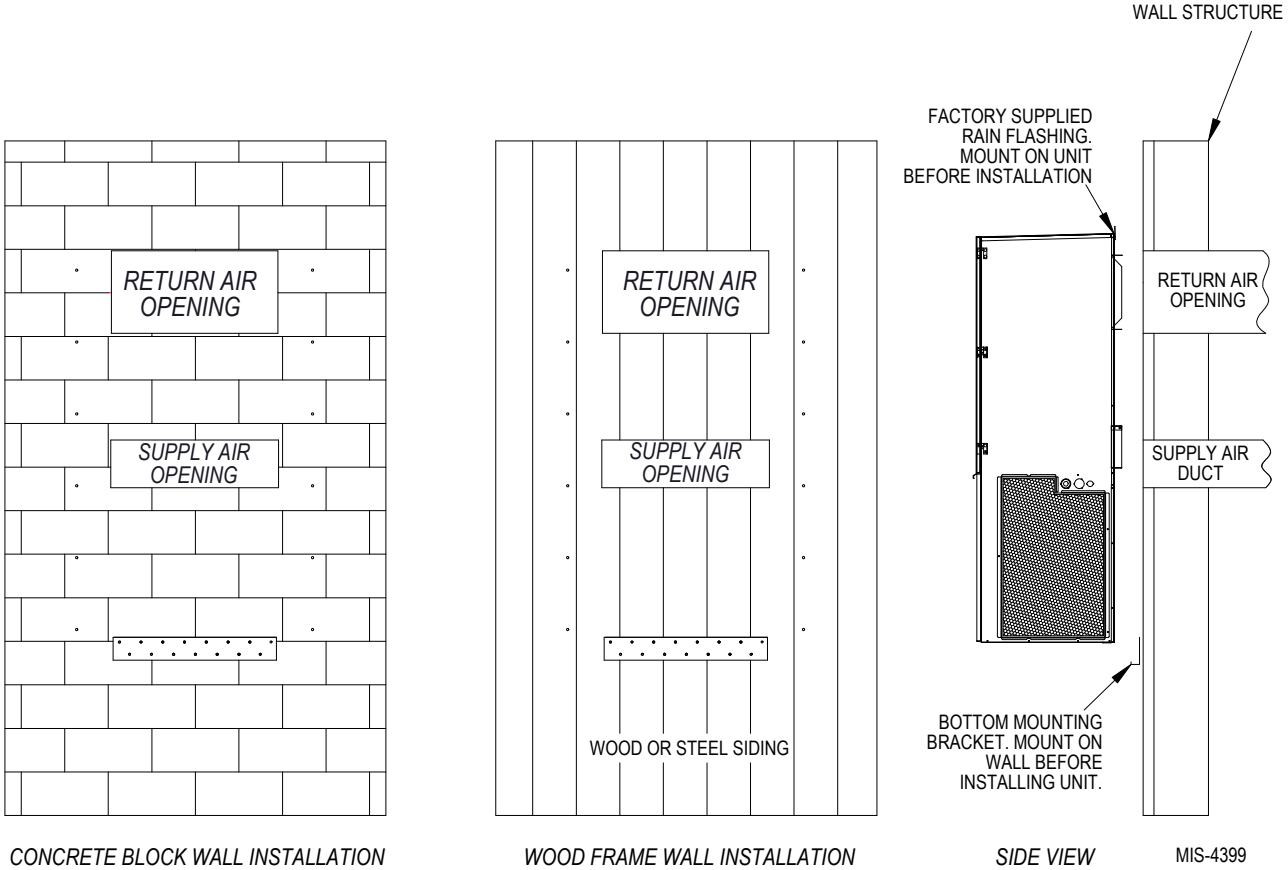

FIGURE 4
Wall Mounting Instructions

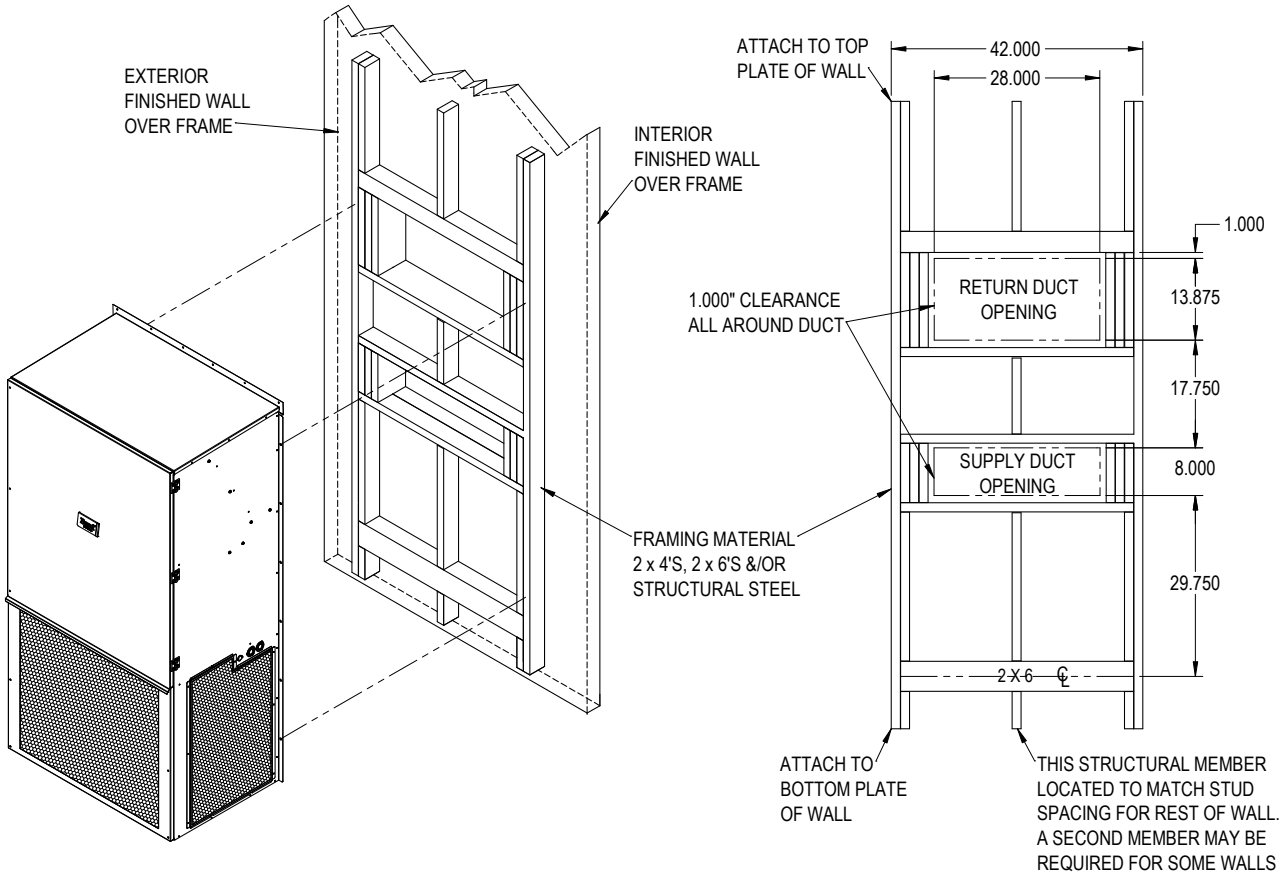

Wiring – Main Power

⚠ WARNING

Electrical shock hazard.

Do not operate this equipment without an earth ground attached and always disconnect the remote electric power supplies before servicing.

Electrical shock can result in serious injury or death.

Refer to the unit rating plate for wire sizing information and maximum fuse or circuit breaker size. Each outdoor unit is marked with a "Minimum Circuit Ampacity". This means that the field wiring used must be sized to carry that amount of current. Depending on the installed KW of electric heat, there may be two field power circuits required. If this is the case, the unit serial plate will so indicate. All models are suitable only for connection with copper wire. Each unit and/or wiring diagram will be marked "Use Copper Conductors Only". These instructions ***must be*** adhered to. Refer to the National Electrical Code (NEC) for complete current carrying capacity data on the various insulation grades of wiring material. All wiring must conform to NEC and all local codes.

The electrical data lists fuse and wire sizes (75°C copper) for all models including the most commonly used heater sizes. Also shown are the number of field power circuits required for the various models with heaters.

The unit rating plate lists a maximum fuse or circuit breaker that is to be used with the equipment. The correct size must be used for proper circuit protection and also to assure that there will be no nuisance tripping due to the momentary high starting current of the compressor motor.

The disconnect access door on this unit may be locked to prevent unauthorized access to the disconnect. To convert for the locking capability, bend the tab located in the bottom left-hand corner of the disconnect opening under the disconnect access panel straight out. This tab will now line up with the slot in the door. When shut, a padlock may be placed through the hole in the tab preventing entry.

See Table 7 on page 37 for electrical specifications.

Wiring – Low Voltage

All 230/208V (60 Hz) and 240/220 (50 Hz) 1 phase equipment have dual primary voltage transformers. All equipment leaves the factory wired on 240V tap. For 208V (220V) operation, reconnect from 240V to 208V tap. The acceptable operating voltage range for the 240 and 208V taps are:

TAP	RANGE
240	254 – 216
208	215 – 197

NOTE: *The voltage should be measured at the field power connection point in the unit and while the unit is operating at full load (maximum amperage operating condition).*

For low voltage wiring, an 18 gauge copper, color-coded cable is recommended. See Table 2 for more information.

TABLE 2
Thermostat Wire Size

Transformer VA	FLA	Wire Gauge	Maximum Distance In Feet
50	2.3	18 gauge 16 gauge 14 gauge 12 gauge	60 100 160 250

Low Voltage Connections

These units use a 24-volt AC low voltage circuit.

C terminal is 24VAC common and is grounded.

Y1 terminal is the input for cooling.

B/W1 terminal is the 5kw heat package.

W2 terminal is the 10kw heat package.

G terminal is blower only – nominal speed.

H is blower high speed. This can be applied in any mode of operation.

BK terminal is the input for nominal blower speed in cooling mode. The jumper bar between terminal 8 (R) and 9 (BK) can be removed to reduce the nominal blower speed in cooling mode.

Refer to Figure 5 on page 20 for blower speed information.

F terminal is 24 volt dirty filter alarm active output.

L terminal is 24 volt refrigerant lockout alarm (high/low pressure).

Unit Shutdown Feature (Standard on All Models)

The 5 (RT) terminal is the 24VAC transformer output, and the 6 (R) terminal is the 24VAC hot terminal for the operation of the equipment. RT and R are connected with a jumper bar which can be removed and RT and R connected to an external NC (normally closed) contact such as a fire/smoke detector that will cause shutdown of the equipment upon activation.

FIGURE 5
Low Voltage Connections

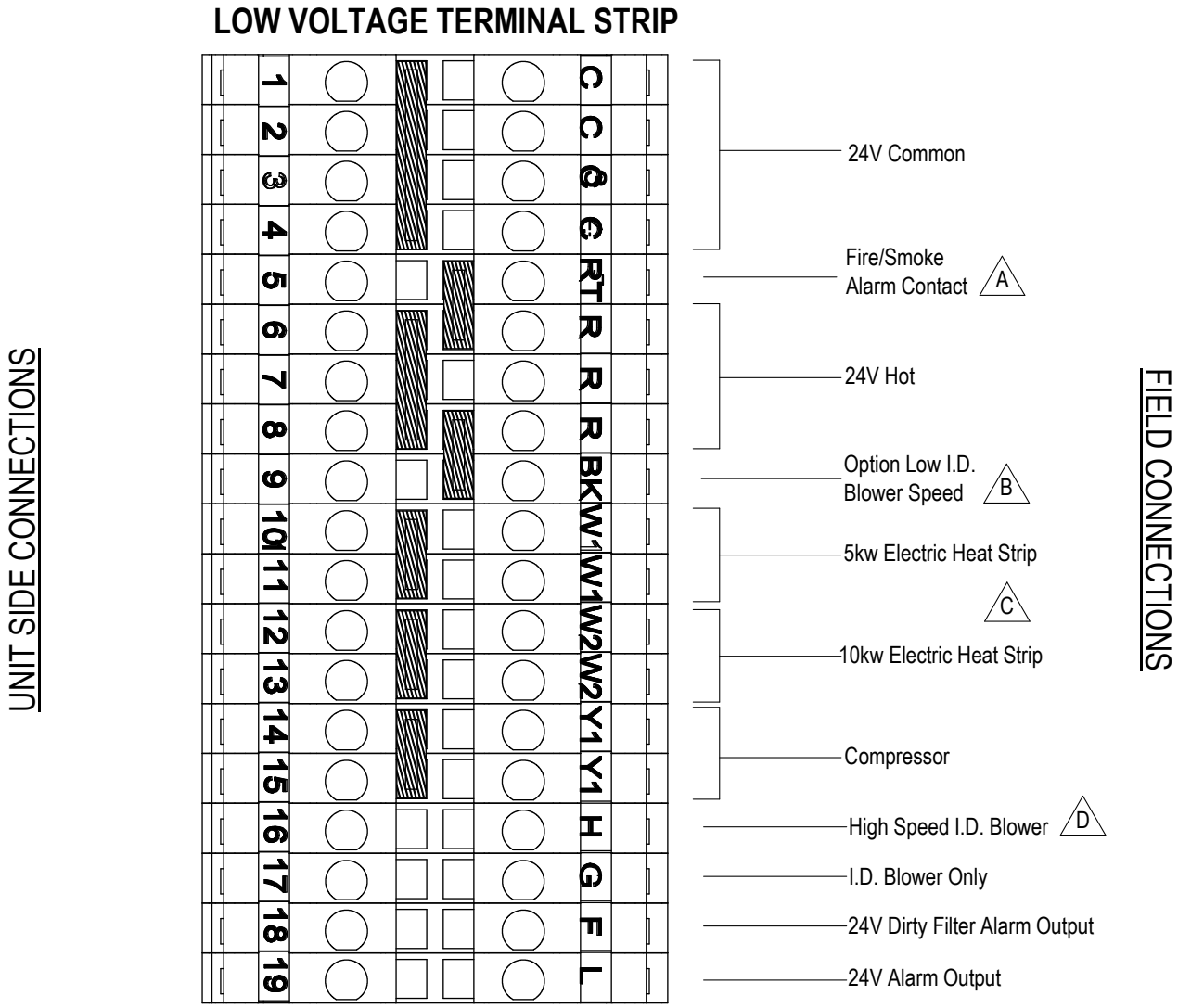

A The RT terminal is the 24VAC transformer output, and the R terminal is the 24VAC hot terminal for the operation of the equipment. RT and R are connected with a jumper bar which can be removed and RT and R connected to an external NC (normally closed) contact such as fire/smoke detector that will cause shutdown of the equipment upon activation.

B The BK terminal controls the nominal speed selection in cooling mode. When the BK jumper is in place, the I.D. blower will provide 700cfm when Y1 is energized. When the BK jumper is removed, the I.D. blower will provide 600cfm when Y1 is energized.

C The B/W1 and W2 terminals are for the operation of the 5kw and 10kw heat strips, respectively. Both terminals may be energized for a total output of 15kw of electric heat.

D The H terminal can be energized in any mode of operation to initiate or increase I.D. blower speed to 1100cfm.

MIS-4400 B

NOTICE

These units require R-410A refrigerant and polyol ester oil.

General

1. Use separate service equipment to avoid cross contamination of oil and refrigerants.
2. Use recovery equipment rated for R-410A refrigerant.
3. Use manifold gauges rated for R-410A (800 psi/250 psi low).
4. R-410A is a binary blend of HFC-32 and HFC-125.
5. R-410A is nearly azeotropic—similar to R-22 and R-12. Although nearly azeotropic, charge with liquid refrigerant.
6. R-410A operates at 40-70% higher pressure than R-22 and systems designed for R-22 cannot withstand this higher pressure.
7. R-410A has an ozone depletion potential of zero, but must be reclaimed due to its global warming potential.
8. R-410A compressors use Polyol Ester oil.
9. Polyol Ester oil is hygroscopic; it will rapidly absorb moisture and strongly hold this moisture in the oil.
10. A liquid line dryer must be used—even a deep vacuum will not separate moisture from the oil.
11. Limit atmospheric exposure to 15 minutes.
12. If compressor removal is necessary, always plug compressor immediately after removal. Purge with small amount of nitrogen when inserting plugs.

Topping Off System Charge

If a leak has occurred in the system, Bard Manufacturing recommends reclaiming, evacuating (see criteria above) and charging to the nameplate charge. If done correctly, topping off the system charge can be done without problems.

With R-410A, there are no significant changes in the refrigerant composition during multiple leaks and recharges. R-410A refrigerant is close to being an azeotropic blend (it behaves like a pure compound or single component refrigerant). The remaining refrigerant charge, in the system, may be used after leaks have occurred and then "top-off" the charge by utilizing the pressure charts on the inner control panel cover as a guideline.

REMEMBER: *When adding R-410A refrigerant, it must come out of the charging cylinder/tank as a liquid to avoid any fractionation, and to ensure optimal system performance. Refer to instructions for the cylinder that is being utilized for proper method of liquid extraction.*

⚠ WARNING

Failure to conform to these practices could lead to damage, injury or death.

Safety Practices

1. Never mix R-410A with other refrigerants.
2. Use gloves and safety glasses. Polyol Ester oils can be irritating to the skin and liquid refrigerant will freeze the skin.
3. Never use air and R-410A to leak check; the mixture may become flammable.
4. Do not inhale R-410A—the vapor attacks the nervous system, creating dizziness, loss of coordination and slurred speech. Cardiac irregularities, unconsciousness and ultimately death can result from breathing this concentration.
5. Do not burn R-410A. This decomposition produces hazardous vapors. Evacuate the area if exposed.
6. Use only cylinders rated DOT4BA/4BW 400.
7. Never fill cylinders over 80% of total capacity.
8. Store cylinders in a cool area, out of direct sunlight.
9. Never heat cylinders above 125°F.
10. Never trap liquid R-410A in manifold sets, gauge lines or cylinders. R-410A expands significantly at warmer temperatures. Once a cylinder or line is full of liquid, any further rise in temperature will cause it to burst.

Important Installer Note

For improved start-up performance, wash the indoor coil with dishwashing detergent.

Pressure Service Ports

High and low pressure service ports are installed on all units so that the system operating pressures can be observed.

This unit employs high-flow Coremax valves instead of the typical Schrader type valves.

WARNING! Do NOT use a Schrader valve core removal tool with these valves. Use of such a tool could result in eye injuries or refrigerant burns!

To change a Coremax valve without first removing the refrigerant, a special tool is required which can be obtained at www.fastestinc.com/en/SCCA07H. See the replacement parts manual for replacement core part numbers.

Compressor Control Module

The compressor control module (CCM) is standard on all models covered by this manual.

Features

Delay-on-Make Timer
Short Cycle Protection/Delay-on-Break
Low Pressure Detection
High Pressure Detection
LPC and HPC Status LEDs
Test Mode
Brownout Protection with Adjustment

Delay-on-Make Timer

A delay-on-make timer is included to be able to delay startup of the compressor. This is desired when more than one unit is on a structure so that all of the units do not start at the same time which could happen after a power loss or building shutdown. The delay-on-make time period is 2 minutes plus 10% of the delay-on-break time period. To ensure that all of the units do not start at the same time, adjust the delay-on-break timer on each unit to a slightly different delay time.

Short Cycle Protection/Delay-on-Break

An anti-short cycle timer is included to prevent short cycling the compressor. This is adjustable from 30 seconds to 5 minutes via the adjustment knob (see Figure 6). Once a compressor call is lost, the time period must expire before a new call will be initiated.

Low Pressure Detection

Low pressure switch monitoring allows for a lockout condition in a situation where the switch is open. If the low pressure switch remains open for more than 2 minutes, the CCM will de-energize the compressor for the delay-on-break time. If the switch closes again, it will then restart the compressor. If the switch trips again during the same Y call, the compressor will be de-energized and the alarm terminal will be energized indicating an alarm. The blue LED will light and stay on until power is cycled to the control or a loss of voltage is present at Y terminal for more than ½ second.

High Pressure Detection

High pressure switch monitoring allows for a lockout condition in a situation where the switch is open. If the high pressure switch opens, the CCM will de-energize the compressor. If the switch closes again, it will then restart the compressor after the delay-on-break setting has expired on the device. If the switch trips again during the same thermostat call, the compressor will be de-energized and the alarm terminal will be energized indicating an alarm. The red LED will light and stay on until power is cycled to the control or a loss of voltage is present at Y terminal for more than ½ second.

Test Mode

By rapidly rotating the potentiometer (POT) clockwise (see Figure 6), all timing functions will be removed for testing.

The conditions needed for the unit to enter test mode are as follows: POT must start at a time less than or equal to the 40 second mark. The POT must then be rapidly rotated to a position greater than or equal to the 280 second mark in less than ¼ second. Normal operation will resume after power is reset or after the unit has been in test mode for at least 5 minutes.

Brownout Protection with Adjustment

Brownout protection may be necessary if the utility power or generator power has inadequate power to prevent the voltage from dropping when the compressor starts. This is rare but can happen if the generator is undersized at the site or if the site is in a remote location far from the main power grid. Under normal circumstances, allowing the brownout to be ignored for a time period should not be needed. The CCM is shipped in “0” do not ignore position, with all the DIP switches off (see Figure 6).

If ignoring the brownout is needed because of the above conditions, three preset timers can be set by DIP switches in order to delay signaling a power brownout for a specific length of time after compressor contactor is energized. This allows the compressor a time period to start even if the voltage has dropped and allows the voltage to recover. This delay only happens when the CC terminal energizes. The delay can be set to 1 second (“A” DIP switch), 5 seconds (“B” DIP switch) or 10 seconds (“C” DIP switch); time is not cumulative—only the longest setting will apply. If the voltage recovers during the brownout delay period, the compressor will continue running.

If a brownout condition is detected by the CCM at any point while there is a cooling call or power is on at Y, the troubleshooting light will flash blue. The light will continue to flash until the cooling call is satisfied or power is removed from the Y terminal. This condition does not prevent operation, it only indicates that a

FIGURE 6
Compressor Control Module

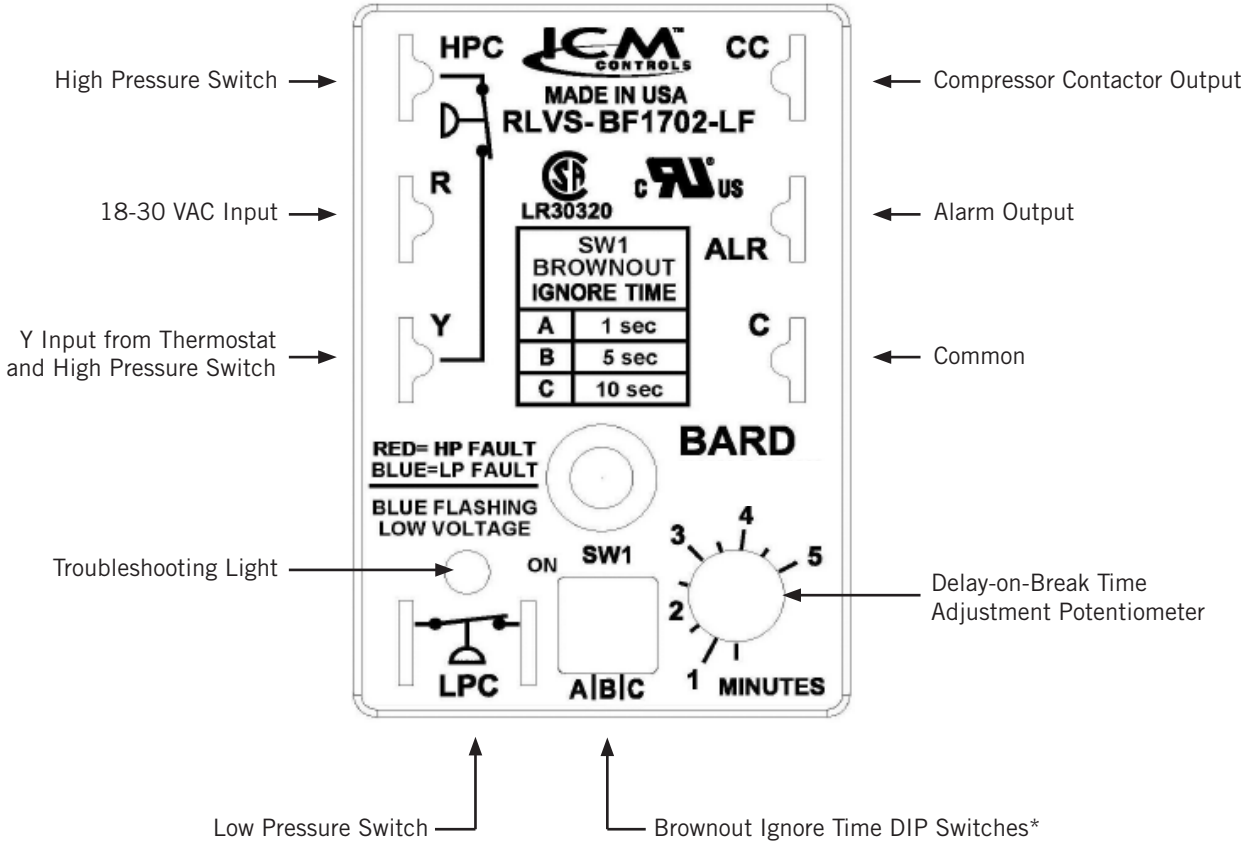

* Turn on only one switch for that specific ignore time setting. 10 seconds is the maximum brownout ignore time. If all switches are "off", the control is in "do not ignore".

brownout condition was present at some point during the call. If a brownout condition is detected while CC has an output, CC will be de-energized and will retry after the delay-on-break timer is satisfied, honoring any DIP switch timer chosen when the CC output is re-energized; this process will continue until call is satisfied.

If inadequate utility or generator power continues after the Delay-on-Make or Delay-on-Break timer is fulfilled, the CC output will not energize. This could lead to the compressor never starting. The control will see the brownout immediately and not start.

A common scenario and one that has been seen in the field is when a unit or units switches from utility power to generator power. With slower transfer switches, the time delay between the utility power and generator power didn't cause a problem. The units lost power, shut off and came back on line normally. With the introduction of almost instantaneous transfer switches, the power glitch may be enough that the compressor will start to run backwards.

Condenser Fan Operation

NOTE: *This unit is equipped with a low ambient control (LAC); therefore, the condenser fan motor will have a delayed start until system refrigerant operating pressure builds up. After starting, the fan motor may or may not cycle depending upon ambient conditions. This is normal operation.*

Sequence of Operation

Cooling

Circuit R-Y1 makes at thermostat pulling in compressor contactor, starting the compressor, indoor motor and outdoor motor.

(See ***NOTE*** under **Condenser Fan Operation** concerning operation of the low ambient control.)

Heating

Circuit R-B/W1 energizes the 5kw heat strip to begin stage 1 heating.

Circuit R-W2 energizes the 10kw heat strip to begin stage 2 heating.

Circuit R-B/W1-W2 energizes both the 5kw and 10kw heat strips to begin stage 3 heating (15kw total).

Dehumidification

Circuit R-Y1 paired with either B/W1, W2, or B/W1-W2, pulls in the compressor contactor and the appropriate electric heat contactor(s), starting the compressor, indoor motor, outdoor motor and electric reheat.

High Pressure Switch Operation

The control has a built-in lockout system that allows the unit to have the high pressure switch trip up to two times in 1 hour and only encounter a "soft" lockout. A "soft" lockout shuts the compressor off and waits for the pressure switch to reset, which at that point then allows the compressor to be restarted as long as the 5-minute short cycle timer has run out. If the high pressure switch trips a third time within 1 hour, the unit is in "hard" lockout indicating something is certainly wrong and it will not restart itself.

Hot Gas Bypass

The hot gas bypass valve monitors the outlet pressure of the evaporator and will begin to modulate open as the load on the unit decreases to the point where the evaporator temperature is at the setpoint of the bypass valve. The bypass valves are factory adjusted to a setting of roughly 34°F evaporator temperature (~105psi suction pressure). This means that the compressor can be operated continuously and the minimum evaporator temperature will be maintained at ~34°F regardless of indoor or outdoor load conditions. (Please note that the hot gas bypass valve is not intended for field adjustment.) The result of this is improved unit performance at lower indoor temperatures and prevention of coil freeze. At normal operating conditions, Bard recommends an indoor temperature setting of 60°F or above. When outdoor ambient conditions fall below 0°F, Bard recommends an indoor temperature setting of 70°F or above to help retain unit capacity.

The hot gas bypass valve responds to changes in downstream pressure (suction pressure) from the evaporator.

When the evaporating pressure is above the valve setting, the valve remains closed. As the suction pressure drops below the valve setting, the valve responds and begins to open. As with all modulating type valves, the amount of opening is proportional to the change in the variable being controlled—in this case the suction pressure. As the suction pressure continues to drop, the valve continues to open farther until the limit of the valve stroke is reached.

Bypass to Evaporator Inlet with Distributor

This method of application, illustrated in Figure 7, provides distinct advantages.

This system is designed to deliver hot gas to a specialized distributor directly after the expansion device. The primary advantage of this method is that the system thermostatic expansion valve will respond to the increased superheat of the vapor leaving the evaporator and will provide the liquid required for desuperheating. Also, the evaporator serves as an excellent mixing chamber for the bypassed hot gas and the liquid-vapor mixture from the expansion valve. This ensures a dry vapor reaching the compressor suction. Oil return from the evaporator is also improved since the velocity in the evaporator is kept high by the hot gas.

Externally Equalized Bypass Valves

Since the primary function of the hot gas bypass (HGBP) valve is to maintain suction pressure, the compressor suction pressure is the control pressure and must be exerted on the valve diaphragm. When the HGBP valve is applied as shown in Figure 7, where there is an appreciable pressure drop between the valve outlet and the compressor suction, the externally equalized valve must be used. This is true because when the valve opens a sudden rise in pressure occurs at the valve outlet.

A thermal expansion valve with external equalizer and a special refrigerant distributor to allow hot gas injection at the inlet of the evaporator by feeding the side connection distributor is utilized.

Shutoff Valve

The unit is equipped with a manually operated shutoff valve between the HGBP valve and the distributor. This may be used to remove the HGBP system as a variable during troubleshooting.

FIGURE 7
Hot Gas Bypass

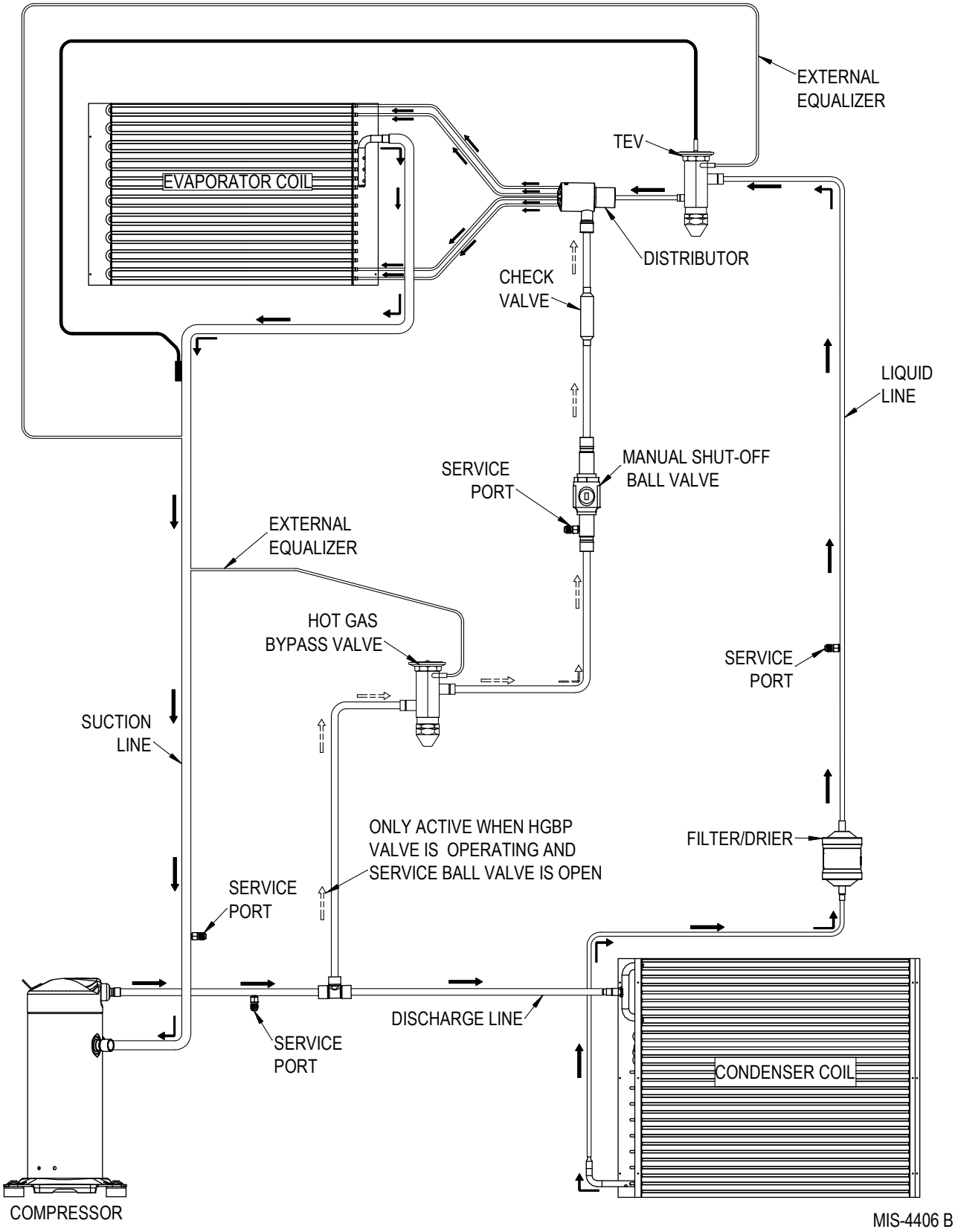

FIGURE 8
Hot Gas Bypass Troubleshooting

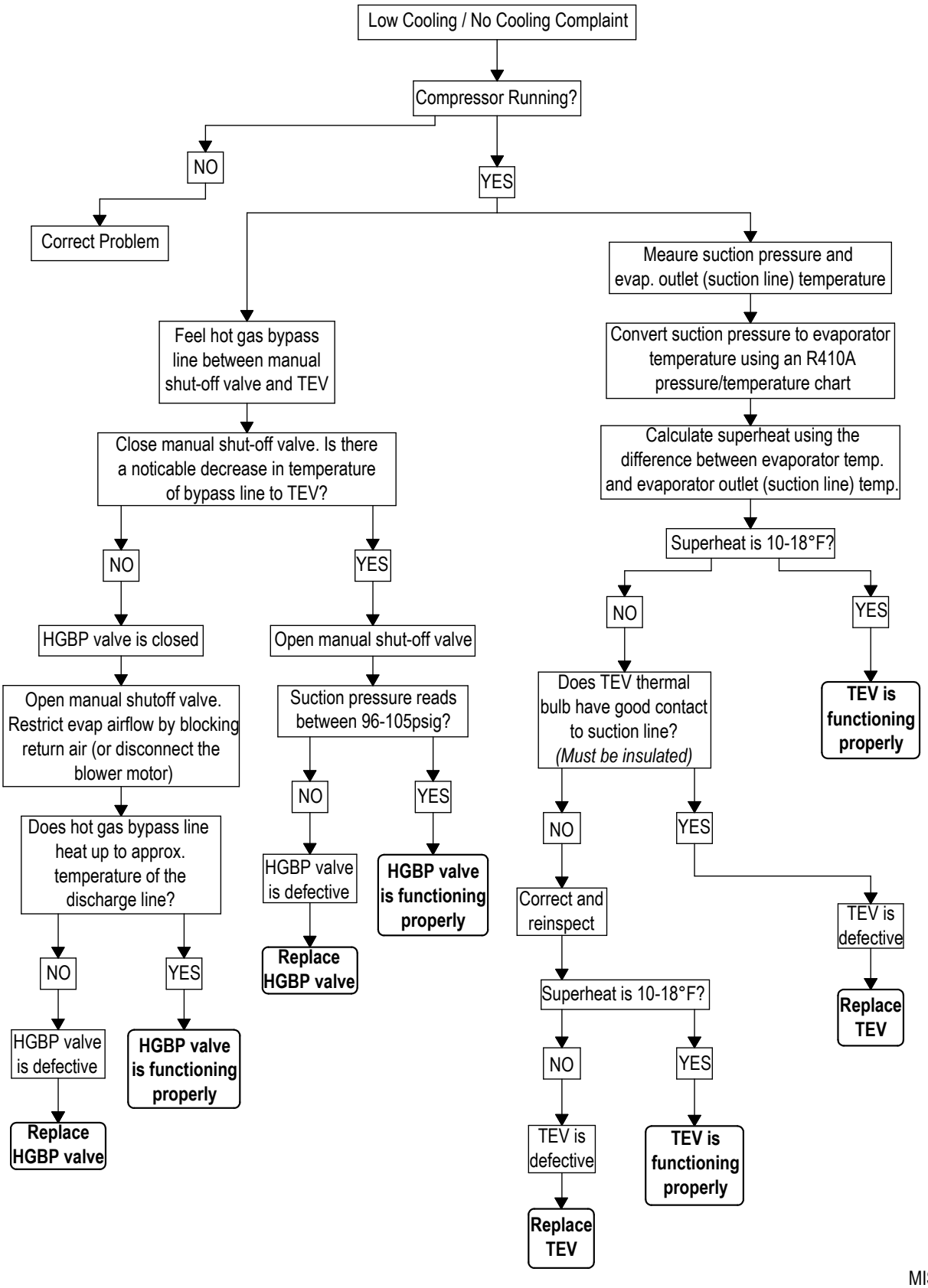

Fan Blade Setting Dimensions

The correct fan blade setting for proper air delivery across the outdoor coil is shown in Figure 9. Refer to Table 3 for unit specific dimension.

Any service work requiring removal or adjustment in the fan and/or motor area will require that the dimensions below be checked and blade adjusted in or out on the motor shaft accordingly.

FIGURE 9
Fan Blade Setting

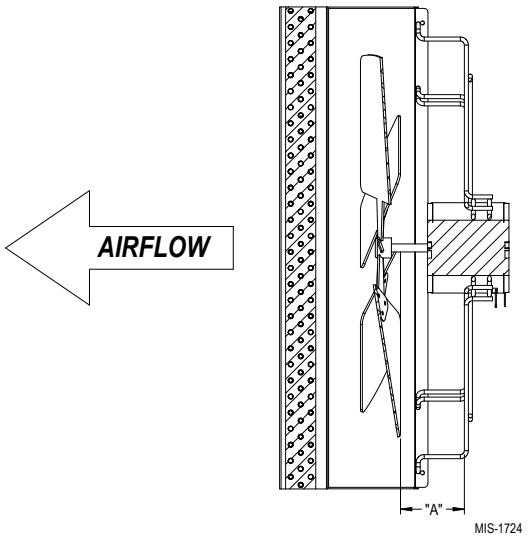

TABLE 3
Fan Blade Dimension

Model	Dimension A
A36RYH	1.5"

Removal of Fan Shroud

1. Disconnect all power to the unit.
2. Remove the screws holding both grilles, one on each side of unit, and remove grilles.
3. Remove nine screws holding fan shroud to condenser and bottom.
4. Unwire condenser fan motor.
5. Slide complete motor, fan blade and shroud assembly out the left side of the unit.
6. Service motor/fan as needed.
7. Reverse steps to re-install.

R-410A Refrigerant Charge

This unit was charged at the factory with the quantity of refrigerant listed on the serial plate. AHRI capacity and efficiency ratings were determined by testing with this refrigerant charge quantity.

Service Hints

1. Caution owner/operator to maintain clean air filters at all times and to not needlessly close off supply and return air registers. This reduces airflow through the system, which shortens equipment service life as well as increasing operating costs.
2. Check all power fuses or circuit breakers to be sure they are the correct rating.
3. Periodic cleaning of the outdoor coil to permit full and unrestricted airflow circulation is essential.

Unit Airflow

These units are equipped with a variable speed (ECM) indoor motor that automatically adjusts itself to maintain approximately the same rate of indoor airflow in any conditions, at static pressures up to 1" W.C.

The A36RYH unit is designed to provide a variety of indoor airflows in each mode of operation. During cooling and blower-only operation, the default airflow is 700 cfm. By removing the BK jumper between pins 8 and 9 on the unit low voltage strip, the airflow can be reduced to 600 cfm in cooling mode. When electric heat is energized, the default airflow is 900 cfm. In any mode of operation, the H pin can be energized to increase indoor airflow to 1100 cfm.

Dirty Filter Switch

1. Disconnect all power to the unit. Open the left-side filter access door.
2. The dirty filter switch is located to the top left of the filter access opening against the unit back (see Figure 10 on page 28). The dirty filter indicator light is located on the exterior of the unit underneath the outer control panel door. The dirty filter reset switch is located in the unit control panel and can be accessed by removing the outer control panel door. Remove the cover on the dirty filter switch and ensure the knob is set at 0.8" W.C. (see Figure 11 on page 29). This is only a recommended starting point prior to making switch adjustments. Switch setting is highly dependent on filter type used, blower speed, unit ducting and other unit installation characteristics. See **Dirty Filter Switch Adjustment** on page 29 for instructions on how to make proper switch adjustments.

3. Re-install filter access door.

FIGURE 10
Dirty Filter Switch, Dirty Filter Indicator Light and Dirty Filter Reset Switch

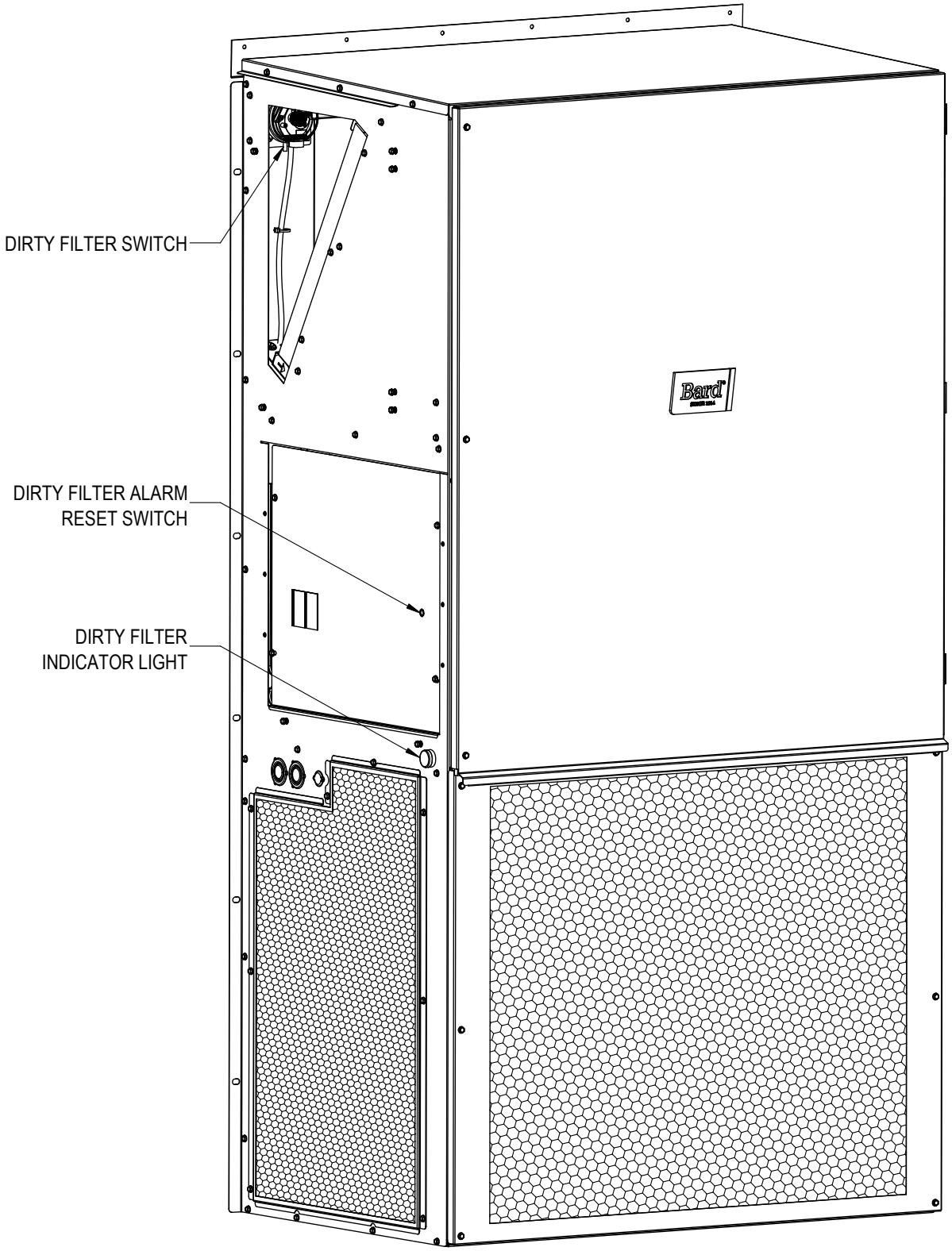

MIS-4479

Dirty Filter Switch Adjustment

1. Apply power to the unit.
2. Turn the unit indoor blower on (energize R-G on low voltage terminal board).
3. With air filters installed and switch initially set at 0.8" W.C. (see Step 2 under **Dirty Filter Switch**), open the filter access door and begin restricting the air filter of the unit using a piece of cardboard under the filters until the switch trips and the light comes on. If the filter is restricted by 75% (or desired restriction amount), skip to Step 6.
4. If switch setting adjustment is required, disconnect power to the unit. Remove the cover on the airflow switch so that adjustment can be made. If the switch tripped before 75% restriction was reached, turn the knob slightly clockwise. If the switch tripped after 75%, turn the knob counter-clockwise (see Figure 11).
5. Repeat Steps 1-3. Continue to make adjustments described in Step 4 until the desired restriction is obtained.
6. Remove the restriction and reset the filter switch. Replace the switch cover once adjustment is complete.
7. Close the filter access door. This completes the adjustment.

FIGURE 11
Adjusting Dirty Filter Switch

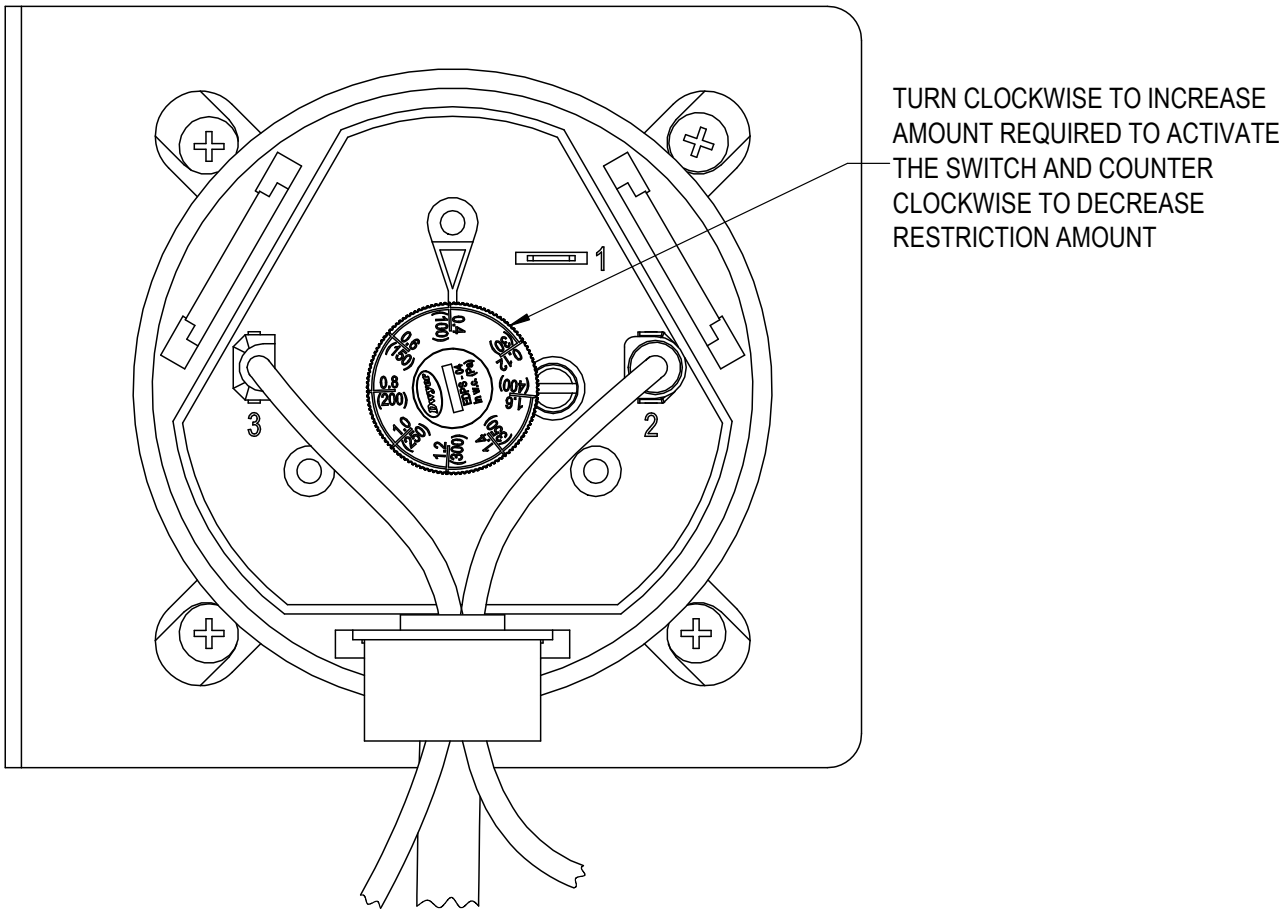

MIS-4480

Manually Opened Fresh Air Damper

The optional manual opened fresh air damper (MOFAD) is built into the left-side unit filter access door. The purpose of the MOFAD is to provide a means of ventilation of the indoor space for a limited amount of time using a powered room exhaust when the Bard unit is off. However, if used with a field-supplied pressure relief damper, the Bard unit will provide up to 100 cfm of ventilation air when the indoor blower is operating. The MOFAD is manually opened by turning the external latch located on the bottom of the MOFAD (see Figure 12). The MOFAD is manually closed when ventilation is no longer required. The damper is non-adjustable and is either in a fully opened or closed position. The unit blower can be operated in blower only, cooling or heating modes to introduce outdoor air into the indoor space during temporary ventilation.

NOTE: *The MOFAD is designed to be used for temporary ventilation only of the indoor space and must be closed again before resuming normal cooling operation. Failure to close the damper may result in unacceptable indoor conditions during normal unit operation.*

FIGURE 12
Manually Opened Fresh Air Damper

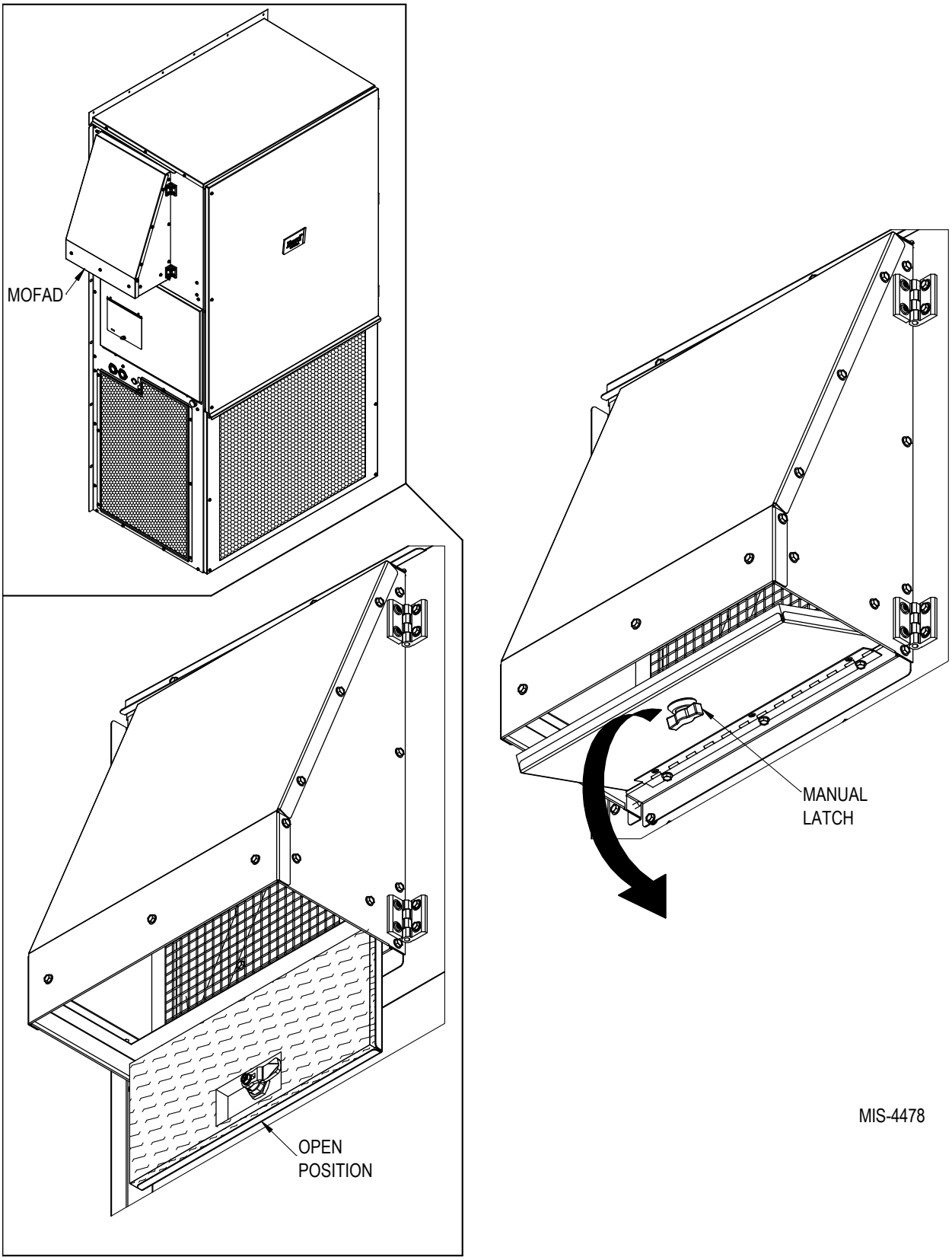

Troubleshooting ECM™ 142R Outdoor Fan Motors

⚠ WARNING

Exposed moving parts.

Disconnect all electrical power before servicing.

Failure to do so could result in severe injury or amputation.

⚠ WARNING

Electrical shock hazard.

Disconnect the remote electric power supply or supplies before servicing.

Failure to do so could result in serious injury or death.

1. In normal operation, this motor may rock back and forth on start up. Do not replace if this is the only symptom identified.
2. If the system is operating properly, but the motor appears to run slower than it should, the motor is good. High efficiency systems with optimized fan blades are engineered to run slow to decrease noise. The Bard AGRI-TEC Series models also adjust fan speed based upon varied outdoor ambient conditions to optimize sound and unit efficiency.
3. If the system is noisy, freezing up, running a high head pressure, tripping the high pressure switch or compressor overload, check the following:
   a. Ensure cleanliness of condenser coil(s) and fan blade/shroud.
   b. Confirm the fan blade is not bent or deformed, isn't rubbing on the shroud, and that it is tight on the motor shaft. Also ensure the motor is secure in its mounting system and the mounting system is secure to the unit.
   c. The Bard AGRI-TEC is equipped with a low ambient control pressure switch. This pressure switch completes the 24VAC common feed to the outdoor fan motor control in cooling mode. If this switch is defective, the outdoor air temperature is too cold to raise the head pressure to the 350# switch closing setpoint or the system charge is too low, this could be the cause of the issue.

⚠ CAUTION

Do not operate motor without fan blade attached. Such operations will cause the motor to oscillate up and down.

⚠ CAUTION

The correct motor that is a direct replacement for the failed motor must be obtained from the manufacturer.

Using the wrong motor voids all warranties and may produce unexpected results.

   d. If motor is not running, go to next section.
4. If the motor does not appear to be running at the proper speed or does not shut off, refer to the next section for voltage checks to determine if the motor is getting the proper input signals.

   If the motor IS NOT receiving any communication, troubleshoot the communication issue using the diagnostic table for the fan logic control.

   a. This motor uses a 7-wire harness to control the motor.
      - Line power is connected as follows:

        Red wire connects to L1

        Black wire connects to L2

        Green/yellow wire" connects to ground
      - Control power is connected as follows: Blue wire connects to BR terminal on the fan logic control board and subsequently connects to 24VAC common through the fan logic control board.* Yellow wire connects to Y on the fan logic control board. White wire connects to W on the fan logic control board. Orange wire connects to O on the fan logic control board.

NOTE: *A combination of the yellow, white and orange wires being energized (with 24V R signal) determines five different speeds the fan motor will operate at. The fan logic control board uses an outdoor thermistor sensor to determine the speed the fan should operate.*

* The common wire to the BR terminal is interrupted by the low ambient control. This will stop the condenser fan operation until liquid pressure reaches 350#.

TABLE 4
Troubleshooting ECM™ 142R Outdoor Fan Motor

Check line power to motor	Check between red and black wires for line power
	Verify ground by checking green wire to L1 and L2 line power
Check for 24VAC common signal to motor (against Transformer "R" Signal)	Check "BR" terminal of fan logic control board
	Check "Blue" fan lead on "Fan Relay Terminal" of "Fan Logic Control"
	** Is not energized in cooling mode until low ambient fan cycling control is closed by 325 PSIG refrigerant pressure. Above 65°F outdoors in cooling mode, the low ambient control is bypassed.
Check 24VAC "hot" outputs (to "Blue" on fan logic control) to motor. See the following tables based upon outdoor temperature and model of operation.	

Troubleshooting Fan Logic Control

Please reference the Thermistor Temperature/ Resistance Chart (Table 6 on page 34).

- GREEN STATUS LED – Is illuminated during a call for fan operation (power to the board) and is normal.
- RED STATUS LIGHT (LA) – Is illuminated when low ambient control switch is in the closed position. ***NOTE:*** *This is not required in heat pump operation as the low ambient switch is bypassed in this mode of operation. Low ambient switch is also negated in cooling mode above 65°F outdoor temperature.*
- YELLOW STATUS LIGHT (B) – Is illuminated when there is a reversing valve call (for heat pump units). This unit is an air conditioner only—a yellow status light indicates a fault. Consult the unit wiring diagram for correct wiring to the fan logic control board. If the board is wired correctly, this indicates a faulty board and replacement will be necessary.

If the board is reading a fan temperature thermistor value of 3375Ω or less (equivalent to 125°F or an "open" sensor), the fan will operate at the highest speed setting (energizes "W" and "Y" outputs on the board).

If the board is reading a fan temperature value of 196,871Ω or greater (equivalent to -25°F or a "shorted" sensor), the fan will operate at the highest speed setting (energizes "W" and "Y" outputs on the board).

If the low ambient switch is open, the red light will not be illuminated and the "BR" terminal will show open. The "BR" terminal is the "24 volt common" switching output to the outdoor fan motor.

TABLE 5
Cooling Mode

O.D. Temp Sensor	24VAC Signals Between
Below 55°F	Orange to Blue
Between 56° - 69°F	White to Blue
Between 70° - 85°F	Yellow to Blue
Between 86° - 112°F	Orange and White to Blue
Above 112°F	White and Yellow to Blue

NOTE: *If the output signals are not matching the specified temperature range, go to Table 6 and verify the thermistor output curve. If the motor* ***is*** *receiving proper communications and proper high voltage power, and is still not running, proceed with motor replacement. (When checking the resistance/temperature curve, don't forget about the optional 2.2k ohm fan control resistor assembly.)*

Replacing the Motor

This motor is replaced in one piece. The control cannot be replaced separately from the motor. Even if the control is remotely located, the replacement part will be a new control with harness and new motor.

Be sure to have the correct replacement motor from the manufacturer that is a direct replacement for the failed motor.

IMPORTANT: *Using the wrong motor voids all product warranties and may produce unexpected results.*

Always mount the replacement motor and control according to the manufacturers specifications using all required hardware to reduce vibration. Make sure all wires are free of the fan blade and not pinched in mountings or cabinet-through points.

Checking Temperature Sensor

1. Disconnect temperature sensor from fan logic board and from right-hand outdoor coil.
2. Use an ohmmeter and measure the resistance of the sensor. Also use ohmmeter to check for short or open.
3. Check resistance reading to chart of resistance use sensor ambient temperature. (Tolerance of part is ± 10%.)
4. If sensor resistance reads very low, sensor is shorted and will not allow proper operation of the fan control.
5. If sensor is out of tolerance, shorted, open or reads very low ohms, it should be replaced.

TABLE 6
Temperature (F) vs. Resistance (R) of Temperature Sensor

F	R	F	R	F	R	F	R
-25	196871	13	56985	51	19374	89	7507
-24	190099	14	55284	52	18867	90	7334
-23	183585	15	53640	53	18375	91	7165
-22	177318	16	52051	54	17989	92	7000
-21	171289	17	50514	55	17434	93	6840
-20	165487	18	49028	56	16984	94	6683
-19	159904	19	47590	57	16547	95	6531
-18	154529	20	46200	58	16122	96	6383
-17	149355	21	44855	59	15710	97	6239
-16	144374	22	43554	60	15310	98	6098
-15	139576	23	42295	61	14921	99	5961
-14	134956	24	41077	62	14544	100	5827
-13	130506	25	39898	63	14177	101	5697
-12	126219	26	38757	64	13820	102	5570
-11	122089	27	37652	65	13474	103	5446
-10	118108	28	36583	66	13137	104	5326
-9	114272	29	35548	67	12810	105	5208
-8	110575	30	34545	68	12492	106	5094
-7	107010	31	33574	69	12183	107	4982
-6	103574	32	32634	70	11883	108	4873
-5	100260	33	31723	71	11591	109	4767
-4	97064	34	30840	72	11307	110	4663
-3	93981	35	29986	73	11031	111	4562
-2	91008	36	29157	74	10762	112	4464
-1	88139	37	28355	75	10501	113	4367
0	85371	38	27577	76	10247	114	4274
1	82699	39	26823	77	10000	115	4182
2	80121	40	26092	78	9760	116	4093
3	77632	41	25383	79	9526	117	4006
4	75230	42	24696	80	9299	118	3921
5	72910	43	24030	81	9077	119	3838
6	70670	44	23384	82	8862	120	3757
7	68507	45	22758	83	8653	121	3678
8	66418	46	22150	84	8449	122	3601
9	64399	47	21561	85	8250	123	3526
10	62449	48	20989	86	8057	124	3452
11	60565	49	20435	87	7869		
12	58745	50	19896	88	7686		

Low Ambient Control (LAC)

The low ambient control is a pressure switch that is attached to the liquid line of the system and monitors high side pressure. Operation of the LAC occurs as outdoor temperatures drop below 60°F. On/Off controls are used which operate based on pressure changes caused by outdoor temperature changes. LAC operation cycles the condenser fan on/off to maintain desired liquid pressure.

Troubleshooting ECM™ Indoor Blower Motors

CAUTION: *Disconnect power from unit before removing or replacing connectors, or servicing motor. To avoid electric shock from the motor's capacitors, disconnect power and wait at least 5 minutes before opening motor.*

Symptom	Cause/Procedure
Motor rocks slightly when starting	This is normal start-up for ECM
Motor won't start: No movement	Check blower turns by hand Check power at motor Check low voltage (24 Vac R to C) at motor Check low voltage connections (G, R, C) at motor Check for unseated pins in connectors on motor harness Test with a temporary jumper between R - G Check motor for tight shaft Perform motor/control replacement check Perform **Moisture Check**
Motor won't start: Motor rocks but won't start	Check for loose or compliant motor mount Make sure blower wheel is tight on shaft Perform motor/control replacement check
Motor oscillates up and down while being tested off of blower	It is normal for motor to oscillate with no load on shaft
Motor starts but runs erratically: Varies up or down or intermittent	Check line voltage for variation or "sag" Check low voltage connections (G, R, C) at motor, unseated pins in motor harness connectors Check out system controls, thermostat Perform **Moisture Check**
Motor starts but runs erratically: "Hunts" or "puffs"	Does removing panel or filter reduce "puffing"? - Reduce restriction
Motor starts but runs erratically: Blower won't shut off	Current leakage from controls into G, Y? - Check for Triac-switched thermostat or solid-state relay
Excessive noise	Determine if it's air noise, cabinet, duct or motor noise; interview customer, if necessary
Excessive noise: Air noise	High static creating high blower speed? - Is airflow set properly? - Does removing filter cause blower to slow down? Check filter - Use low-pressure drop filter - Check/correct duct restrictions
Excessive noise: Noisy blower or cabinet	Check for loose blower housing, panels, etc. High static creating high blower speed? - Check for air whistling through seams in ducts, cabinets or panels - Check for cabinet/duct deformation
Evidence of Moisture: Motor failure or malfunction has occurred and moisture is present	Replace motor and **Perform Moisture Check**
Evidence of Moisture: Evidence of moisture present inside air mover	Perform **Moisture Check**

Do's and Dont's	
Do	**Don't**
Check out motor, controls, wiring and connections thoroughly before replacing motor	Automatically assume motor is bad
Orient connectors down so water can't get in - Install "drip loops"	Locate connectors above 8 and 4 o'clock positions
Use authorized motor and model #s for replacement	Replace one motor or control model # with another (unless an authorized replacement)
Keep static pressure to a minimum: - Recommend high efficiency, low static filters - Recommend keeping filters clean - Design ductwork for minimum static, maximum comfort - Look for and recommend ductwork improvement, where necessary	Use high pressure drop filters—some have ½" H2O drop! Use restricted returns
Size equipment wisely	Oversize system then compensate with low airflow
Check orientation before inserting motor connectors	Plug in power connector backwards Force plug

Moisture Check

- Connectors are oriented "down" (or as recommended by equipment manufacturer)
- Arrange harness with "drip loop" under motor
- Is condensate drain plugged?
- Check for low airflow (too much latent capacity)
- Check for undercharged condition
- Check and plug leaks in return ducts, cabinet

Comfort Check

- Check proper airflow settings
- Low static pressure for lowest noise
- Thermostat in bad location?

Replacing ECM Control Module

The following steps must be taken to replace the control module for the GE variable-speed indoor blower motor:

1. MUST have the correct replacement module. The controls are factory programmed for specific operating modes. Even though they look alike, different modules may have completely different functionality.

   Using the wrong control module voids all product warranties and may produce unexpected results.
2. Begin by removing AC power from the unit being serviced. **Do not work on the motor with AC power applied.** To avoid electric shock from the motor's capacitors, disconnect power and wait at least 5 minutes before opening motor.
3. It is not necessary to remove the motor from the blower assembly, nor the blower assembly from the unit. Unplug the two cable connectors to the motor control assembly. There are latches on each connector. **Do not pull on the wires.** The plugs remove easily when properly released.
4. Locate the screws that retain to the motor control bracket to the sheet metal of the unit and remove them. Remove two (2) nuts that retain the control to the bracket and then remove two (2) nuts that retain sheet metal motor control end plate (see Figure 13).
5. Using thumb and forefinger to squeeze the latch tab and the opposite side of the connector plug and gently pulling the connector, disconnect the three (3) wires interior of the motor control. **Do not pull on the wires; grip the plug only.** See Figure 13.
6. The control module is now completely detached from the motor. Verify with a standard ohmmeter that the resistance from each motor lead (in the motor plug just removed) to the motor shell is >100K ohms (see Figure 14). (Measure to unpainted motor end plate.) If any motor lead fails this test, do not proceed to install the control module; **the motor is defective and must be replaced.** Installing the new control module will cause it to fail also.
7. Verify that the replacement control is correct for the application. Refer to the manufacturer's authorized replacement list. **Using the wrong control will result in improper or no blower operation.** Orient the control module so that the 3-wire motor plug can be inserted into the socket in the control. Carefully insert the plug and press it into the socket until it latches. **A slight click will be heard when properly inserted.**
8. Reverse Steps #5, 4 and 3 to reconnect the motor control to the motor wires, securing the motor control cover plate, mounting the control to the bracket and mounting the motor control bracket back into the unit. **Make sure the orientation selected for replacing the control ensures the control's cable connectors will be located downward in the application so that water cannot run down the cables and into the control. Do not overtighten the bolts.**
9. Plug the 16-pin control plug into the motor. The plug is keyed. Make sure the connector is properly seated and latched.
10. Plug the 5-pin power connector into the motor. Even though the plug is keyed, **observe the proper orientation. Do not force the connector.** It plugs in very easily when properly oriented. **Reversing this plug will cause immediate failure of the control module.**
11. Final installation check. Make sure the motor is installed as follows:
    a. Motor connectors should be oriented between the 4 o'clock and 8 o'clock positions when the control is positioned in its final location and orientation.
    b. Add a drip loop to the cables so that water cannot enter the motor by draining down the cables (see Figure 15).

The installation is now complete. Reapply AC power to the HVAC equipment and verify that the new motor control module is working properly. Follow the manufacturer's procedures for disposition of the old control module.

Figure 13
Control Disassembly

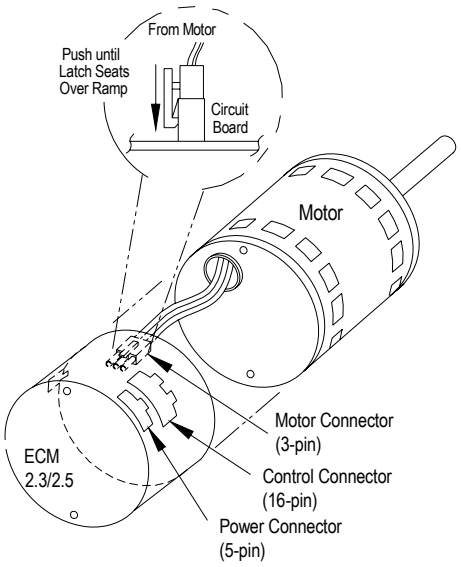

Figure 14
Winding Test

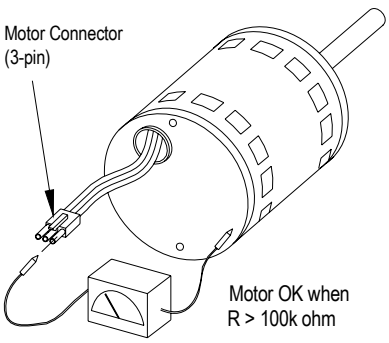

Figure 15
Drip Loop

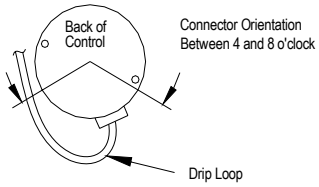

TABLE 7
Electrical Specifications

Kw Operation	Rated Volts, Hertz and Phase	No. Field Power Circuits	Single Circuit		Dual Circuit			
			① Minimum Circuit Ampacity	② Maximum External Fuse or Circuit Breaker	① Minimum Circuit Ampacity		② Maximum External Fuse or Circuit Breaker	
					Ckt. A	Ckt. B	Ckt. A	Ckt. B
-A15	230/208-60-1	1 or 2	107	110	52	55	60	60
-D15	240/220-50-1	1 or 2	106	110	52	54	60	60

① These "Minimum Circuit Ampacity" values are to be used for sizing the field power conductors. Refer to the National Electrical code (latest version), Article 310 for power conductor sizing. **CAUTION**: When more than one field power circuit is run through one conduit, the conductors must be derated. Pay special attention to note 8 of Table 310 regarding Ampacity Adjustment Factors when more than three (3) current carrying conductors are in a raceway.

② Maximum size of the time delay fuse or circuit breaker for protection of field wiring conductors.

NOTE: *The Maximum Overcurrent Protection (MOCP) value listed is the maximum value as per UL 60335 calculations for MOCP (branch-circuit conductor sizes in this chart are based on this MOCP). The actual factory-installed overcurrent protective device (circuit breaker) in this model may be lower than the maximum UL 60335 allowable MOCP value, but still above the UL 60335 minimum calculated value or Minimum Circuit Ampacity (MCA) listed.*

IMPORTANT: *While this electrical data is presented as a guide, it is important to electrically connect properly sized fuses and conductor wires in accordance with the National Electrical Code and all local codes.*

TABLE 8
Electric Heat

Models	230V-1		208V-1	
KW	Amps	BTUH	Amps	BTUH
5	20.0	15,700	18.0	12,800
10	40.0	31,400	36.1	25,600
15	60.0	47,100	54.1	38,400

TABLE 9
Cooling Pressures

Air Temperature Entering Outdoor Coil °F

Model	Return Air Temp (DB/WB)	Pressure	65	75	80	85	90	95	100	105	110	115	120	125	131
A36RYHA	75/62	Low Side	121	124	126	128	130	131	132	134	135	136	137	137	138
		Hide Side	261	300	320	342	364	387	411	436	462	488	516	544	579
	80/67	Low Side	129	133	135	137	139	140	142	143	144	145	146	147	148
		Hide Side	268	308	329	350	373	397	422	447	473	501	529	558	594
	85/72	Low Side	133	138	140	142	144	145	147	148	149	150	151	152	153
		Hide Side	278	318	340	363	386	411	436	463	490	518	547	578	615
A36RYHD	75/62	Low Side	120	125	127	129	131	133	134	136	137	138	139	140	140
		High Side	252	294	315	337	359	382	405	429	453	477	502	528	559
	80/67	Low Side	129	134	136	138	140	142	144	145	146	148	149	149	150
		High Side	259	301	323	346	368	392	415	440	464	489	515	541	573
	85/72	Low Side	133	138	141	143	145	147	149	150	152	153	154	155	156
		High Side	268	312	334	358	381	405	430	455	481	507	533	560	593

Low side pressure ± 4 PSIG
High side pressure ± 10 PSIG

Tables are based upon rated CFM (airflow) across the evaporator coil. If there is any doubt as to correct operating charge being in the system, the charge should be removed and system evacuated and recharged to serial plate charge weight.

NOTE: *To ensure accurate measurements, the service ball valve in the condenser section should be closed to isolate the hot gas bypass valve from the system.*

NOTE: *The LAC switch will begin to cycle the outdoor fan when outdoor temperatures fall below roughly 60°F. This creates pressure fluctuation and does not allow for accurate pressure measurements.*

TABLE 10
Low Voltage Inputs for Unit Operational Modes

Low Voltage Terminal	24V Hot	24V COM	Compressor	Electric Heat 5kw	Electric Heat 10kw	Low Speed I.D. Blower Terminal	High Speed I.D. Blower Terminal	I.D. Blower Only
	R	C	Y1	B/W1	W2	BK	H	G
Operating Mode	Provided by Unit		Provided by Customer Control Logic					
Blower Only - 700 CFM	X	COM				N/A		X
Blower Only - 1100 CFM	X	COM				X	X	X
Cooling - 600 CFM	X	COM	X					N/A
Cooling - 700 CFM	X	COM	X			X		N/A
Cooling - 1100 CFM	X	COM	X			N/A	X	N/A
Electric Heat Only - 5kw - 900 CFM	X	COM		X		N/A		N/A
Electric Heat Only - 5kw - 1100 CFM	X	COM		X		N/A	X	N/A
Electric Heat Only - 10kw - 900 CFM	X	COM			X	N/A		N/A
Electric Heat Only - 10kw - 1100 CFM	X	COM			X	N/A	X	N/A
Electric Heat Only - 15kw - 900 CFM	X	COM		X	X	N/A		N/A
Electric Heat Only - 15kw - 1100 CFM	X	COM		X	X	N/A	X	N/A
Dehum - 5kw - 900 CFM	X	COM	X	X		N/A		N/A
Dehum - 5kw - 1100 CFM	X	COM	X	X		N/A	X	N/A
Dehum - 10kw - 900 CFM	X	COM	X		X	N/A		N/A
Dehum - 10kw - 1100 CFM	X	COM	X		X	N/A	X	N/A
Dehum - 15kw - 900 CFM	X	COM	X	X	X	N/A		N/A
Dehum - 15kw - 1100 CFM	X	COM	X	X	X	N/A	X	N/A

NOTE: *The power status of terminals indicated by cells marked "N/A" will not affect the performance of the unit in the indicated mode.*

NOTE: *Airflow CFM is constant up to 1.0" W.C. static pressure.*
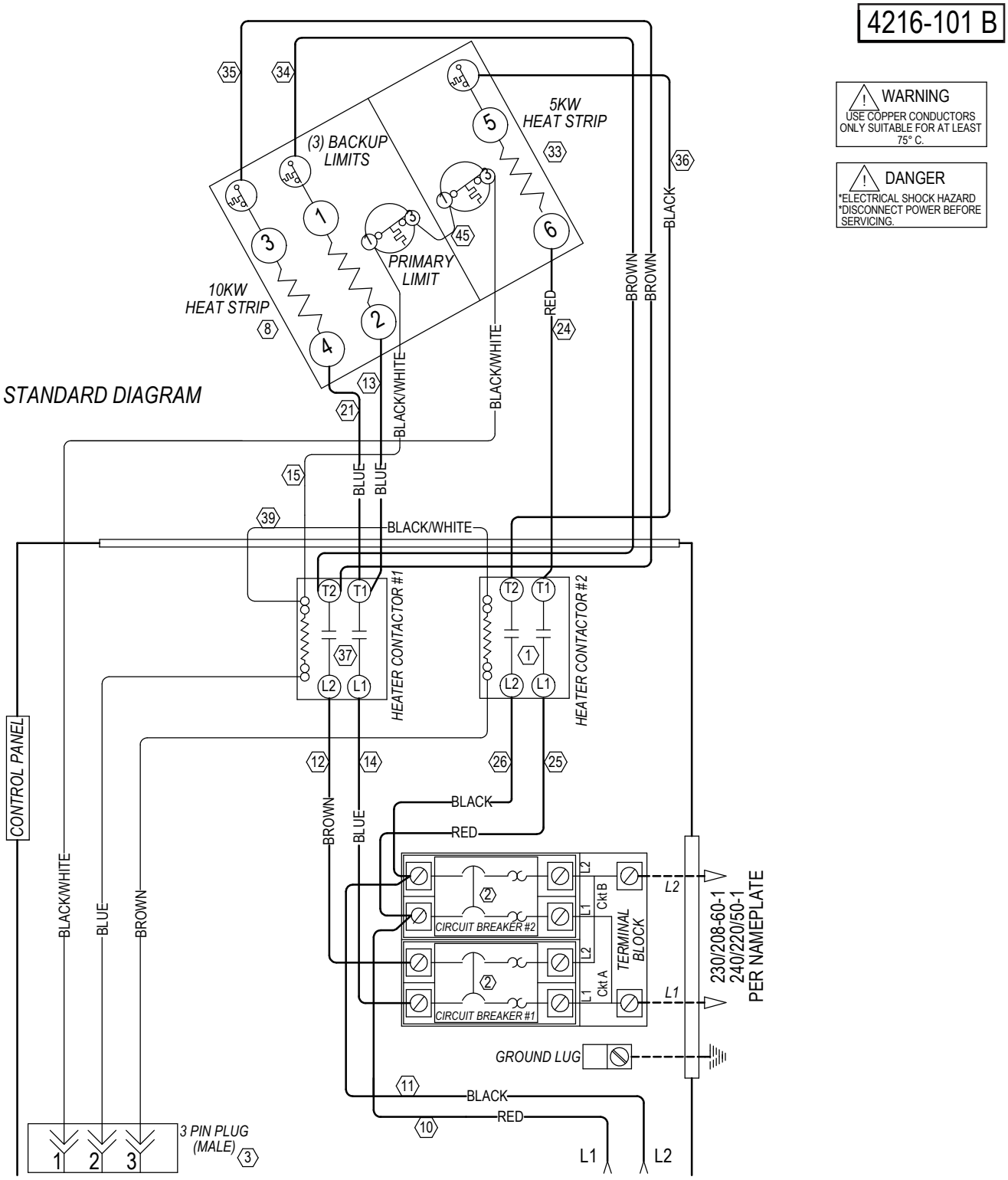
FIGURE 16
Electric Heat Wiring