INSTALLATION INSTRUCTIONS

11EER WH Series
Wall Mount Heat Pump

Models:

W42HY-A	W48HY-A	W60HY-A
W42HY-B	W48HY-B	W60HY-B
W42HY-C	W48HY-C	W60HY-C
W42HYDA	W48HYDA	W60HYDA
W42HYDB	W48HYDB	W60HYDB
W42HYDC	W48HYDC	W60HYDC

Bard®
SINCE 1914
Climate Control Solutions

Bard Manufacturing Company, Inc.
Bryan, Ohio 43506
www.bardhvac.com

Manual: 2100-788B
Supersedes: 2100-788A
Date: 8-29-23

CONTENTS

Safety Instructions 4
General Information 10
General 10
Shipping Damage 10
Additional Publications 10
Heat Pump Wall Mount Model Nomenclature 11
Duct Work 12
Filters 12
Filter Removal/Installation 12
Switching Filter Sizes 13
Fresh Air Intake 14
Installation 15
Basic Installation Design and Application Planning 15
Wall Construction 15
Outdoor Area Inspection 15
Condensate Water Drainage 15
Indoor Ducted and Non-Ducted Applications 15
Indoor Supply Airflow 15
Indoor Return Airflow 15
Ducted Applications 16
Free Blow Applications 16
Thermostat or Indoor Temperature Sensor Placement 16
Unit Installation 16
Materials/Tool List 16
Wall Preparation 17
Wall Mount Installation to Wall Surface 17
Wiring – Main Power 24
High Voltage Connections 24
Wiring – Low Voltage 25
Low Voltage Connections 25
Unit Shutdown Feature 25
Balanced Climate™ Feature 25
Dehumidification Feature 25
Ventilation Features 26
Low Ambient Control 26
Outdoor Temperature Switch and Freeze Protection Thermostat 26
Alarm Relay Feature 26
Dirty Filter Switch Indicator (DFS) 26
Start Up 30
General 30
Topping Off System Charge 30
Safety Practices 30
Important Installer Note 30
High Pressure Switch 30
Three Phase Scroll Compressor Start Up Information 30
Phase Monitor 31
Condenser Fan Operation 31
Service Hints 31
Sequence of Operation 31
Cooling 31
Heating 31
Balanced Climate™ Mode 32
Defrost Cycle 32
Low Pressure Switch Bypass Operation 33
High Pressure Switch Operation 34
Vent Connection Plug 34
Pressure Service Ports 34
Service 35
Solid State Heat Pump Control Troubleshooting Procedure 35
Checking Temperature Sensor Outside Unit Circuit 36
Troubleshooting Nidec SelecTech Series ECM Motors 37
If the Motor is Running 37
If the Motor is Not Running 37
Model SelecTech Communication Diagnostics ... 38
Fan Blade Setting Dimensions 39
R-410A Refrigerant Charge 39
Removal of Fan Shroud 39
Setting Unit Airflow 42
Blower Speeds 42
Speed Tap 1 – Vent/Blower Only 43
Speed Tap 2 – Balanced Climate 43
Speed Tap 3 – Default LO Cooling & Heating 43
Speed Tap 4 – Optional MED Cooling & Heating 43
Speed Tap 5 – Optional HI Cooling & Heating 43
Dirty Filter Switch 43
Dirty Filter Switch Adjustment 44

FIGURES

Figure 1 Front Control Panel Cover 12
Figure 2 Removing Left Filter..... 12
Figure 3 Removing Second Filter..... 13
Figure 4 Filter Tabs in Up Position..... 13
Figure 5 Bend FIlter Tabs Down..... 13
Figure 6 Remove Four Screws 13
Figure 7 Re-Install Filter Support Brackets into Lower Slots 13
Figure 8 Re-Install Screws and Bend Tabs Up..... 13
Figure 9 Install Right 2" Filter..... 14
Figure 10 Install Left 2" Filter..... 14
Figure 11 Fresh Air Damper..... 14
Figure 12 Vent Installation/Removal Clearance Required 18
Figure 13 Unit Dimensions 19
Figure 14 Mounting Instructions..... 20
Figure 15 Electric Heat Clearance 21
Figure 16 Wall Mounting Instructions 22
Figure 17 Wall Mounting Instructions 22
Figure 18 Common Wall Mounting Installations 23
Figure 19 High Voltage Connections 24
Figure 20 Thermostat Connections 28
Figure 21 Thermostat Connections 29
Figure 22 Defrost Control Board.....33
Figure 23 Motor Connections 37
Figure 24 Motor Connections 38
Figure 25 Fan Blade Setting 39
Figure 26 Fan Shroud Removal 39
Figure 27 Speed Taps..... 42
Figure 28 Speed Taps..... 42
Figure 29 Dirty Filter Switch and Dirty Filter Indicator Light/Reset Switch 44
Figure 30 Adjusting Filter Switch 45

TABLES

Table 1 Clearance Required for Service Access and Adequate Condenser Airflow..... 18
Table 2 Minimum Clearances Required to Combustible Materials..... 18
Table 3 Low Voltage Connections for DDC Control 26
Table 4 Wall Thermostats 27
Table 5 Humidity Controls 27
Table 6 CO_2 Controllers 27
Table 7 Thermostat Wire Size..... 27
Table 8 Troubleshooting 35
Table 9 Temperature vs. Resistance..... 36
Table 10 Fan Blade Dimensions..... 39
Table 11A Cooling Pressure – Standard Airflow..... 40
Table 11B Heating Pressure – Standard Airflow 40
Table 12 Electrical Specifications W**HY 41
Table 13 Recommended Airflow..... 42
Table 14 Blower Speeds for Unit Operational Modes..... 43
Table 15 Maximum ESP Electric Heat Only..... 47
Table 16 Electric Heat 48
Table 17 Vent and Control Options 48
Table 18 Optional Accessories 49

GRAPHS

Graph 1 W42HY Indoor Airflow Performance – Wet Coil 46
Graph 2 W48HY Indoor Airflow Performance – Wet Coil 46
Graph 3 W60HY Indoor Airflow Performance – Wet Coil 47
Graph 4 W42HY FAD-NE5 W/O Exhaust Ventilation Delivery 50
Graph 5 W48HY FAD-NE5 W/O Exhaust Ventilation Delivery 50
Graph 6 W60HY FAD-NE5 W/O Exhaust Ventilation Delivery 51

NOTICE

APPLIANCE ACCESSIBLE TO THE GENERAL PUBLIC.

SAFETY INSTRUCTIONS

READ ALL INSTRUCTIONS BEFORE USE

Your safety and the safety of others are very important.
We have provided many important safety messages in this manual and on your appliance. Always read and follow all safety messages.

ANSI Z535.5 Definitions:

DANGER: Indicate[s] a hazardous situation which, if not avoided, will result in death or serious injury. The signal word "DANGER" is to be limited to the most extreme situations. DANGER [signs] should not be used for property damage hazards unless personal injury risk appropriate to these levels is also involved.

WARNING: Indicate[s] a hazardous situation which, if not avoided, could result in death or serious injury. WARNING [signs] should not be used for property damage hazards unless personal injury risk appropriate to this level is also involved.

CAUTION: Indicate[s] a hazardous situation which, if not avoided, could result in minor or moderate injury. CAUTION [signs] without a safety alert symbol may be used to alert against unsafe practices that can result in property damage only.

NOTICE: [this header is] preferred to address practices not related to personal injury. The safety alert symbol shall not be used with this signal word. As an alternative to "NOTICE" the word "CAUTION" without the safety alert symbol may be used to indicate a message not related to personal injury.

DANGER

WARNING

CAUTION

NOTICE

NOTICE

APPLIANCE ACCESSIBLE TO THE GENERAL PUBLIC.

⚠ WARNING

Electrical shock hazard.

Do not operate this equipment without an earth ground attached and always disconnect the remote electric power supplies before servicing.

Electrical shock can result in serious injury or death.

⚠ WARNING

Fire hazard.

Maintain minimum 1/4" clearance between the supply air duct and combustible materials in the first 3' feet of ducting.

Failure to do so could result in fire causing damage, injury or death.

⚠ WARNING

Heavy item hazard.

Use more than one person to handle unit.

Failure to do so could result in unit damage or serious injury.

⚠ WARNING

Electrical shock hazard.

Have a properly trained individual perform these tasks.

Failure to do so could result in electric shock or death.

⚠ CAUTION

Sharp metallic edges.

Take care and wear appropriate protective devices to avoid accidental contact with sharp edges.

Failure to do so can result in personal injury.

The following symbols are displayed on units.

This symbol indicates that the Operation Manual should be read carefully.

This symbol indicates that a service personnel should be handling this equipment with reference to the Installation Manual.

This symbol indicates that information is available such as the Operation Manual or Installation Manual.

IMPORTANT SAFETY INSTRUCTIONS

WARNING

To reduce the risk of explosion, fire, death, electric shock, scalding or injury to persons when using this product, follow basic precautions, including the following:

GENERAL

- The equipment covered in this manual is to be installed by trained, experienced service and installation technicians.
- This appliance is not intended for use by persons (including children) with reduced physical, sensory or mental capabilities, or lack of experience and knowledge, unless they have been given supervision or instruction concerning use of the appliance by a person responsible for their safety.
- The refrigerant system is completely assembled and charged. All internal wiring is complete.
- The unit is designed for use with or without duct work. Flanges are provided for attaching the supply and return ducts.
- These instructions explain the recommended method to install the air-cooled self-contained unit and the electrical wiring connections to the unit.
- These instructions and any instructions packaged with any separate equipment required to make up the entire air conditioning system should be carefully read before beginning the installation. Note particularly "Starting Procedure" and any tags and/or labels attached to the equipment.
- While these instructions are intended as a general recommended guide, they do not supersede any national and/or local codes in any way. Authorities having jurisdiction should be consulted before the installation is made. See Additional Publications for information on codes and standards.
- Size of unit for a proposed installation should be based on heat loss calculation made according to methods of Air Conditioning Contractors of America (ACCA). The air duct should be installed in accordance with the Standards of the National Fire Protection Association for the Installation of Air Conditioning and Ventilating Systems of Other Than Residence Type, NFPA No. 90A, and Residence Type Warm Air Heating and Air Conditioning Systems, NFPA No. 90B. Where local regulations are at a variance with instructions, installer should adhere to local codes.

INSTALLATION

- This product is not intended for use at altitudes exceeding 2,000 meters (6,561 feet). For appliances intended for use at altitudes exceeding 2 000 m (6,561 feet), the maximum altitude of use shall be stated.
- Before use, the appliance must be properly installed as described in this manual.
- Contact the authorized service technician for repair or maintenance of this unit.
- Contact the installer for installation of this unit.
- The air conditioner is not intended for use by young children or invalids without supervision.
- Young children should be supervised to ensure that they do not play with the air conditioner.
- Installation work must be performed in accordance with the National Electric Code by qualified and authorized personnel only.
- Connect to a properly rated, protected, and sized power circuit to avoid electrical overload.
- Adhere to all industry recommended safety procedures including the use of long-sleeved gloves and safety glasses.
- Use care when unpacking and installing. The edges of the product may be sharp.
- Keep packaging materials out of the reach of children. These materials can pose a suffocation risk to children.

OPERATION

- This appliance is not intended for use by persons (including children) with reduced physical, sensory, or mental capabilities, or lack of experience and knowledge, unless they have been given supervision or instruction concerning use of the appliance by a person responsible for their safety.
- Use this appliance only for its intended purpose.
- Never attempt to operate this appliance if it is damaged, malfunctioning, partially disassembled, or has missing or broken parts.
- Do not tamper with controls.

LIRE TOUTES LES INSTRUCTIONS AVANT UTILISATION

Votre sécurité et celle des autres sont très importantes.
Nous avons fourni de nombreux messages de sécurité importants dans ce manuel et sur votre appareil. Lisez et suivez toujours tous les messages de sécurité.

Définitions ANSI Z535.5 :

DANGER : Indique une situation dangereuse qui, si elle n'est pas évitée, entraînera certainement la mort ou des blessures graves. Le mot « DANGER » doit être limité aux situations extrêmes. Les indications « DANGER » ne doivent pas être utilisées pour les risques de dégâts matériels, à moins qu'il n'existe un risque concomitant de blessures corporelles.

AVERTISSEMENT : Indique une situation dangereuse qui, si elle n'est pas évitée, peut entraîner la mort ou des blessures graves. Les indications « AVERTISSEMENT » ne doivent pas être utilisées pour les risques de dégâts matériels, à moins qu'il n'existe un risque concomitant de blessures corporelles.

ATTENTION : Indique une situation dangereuse qui, si elle n'est pas évitée, peut entraîner des blessures mineures à modérées. Les indications « ATTENTION », sans symbole d'avertissement, peuvent être utilisées pour alerter sur des pratiques dangereuses pouvant entraîner des dégâts matériels uniquement.

REMARQUE : cet avis concerne les pratiques n'entraînant aucune blessure corporelle. Le symbole d'avertissement ne doit pas être utilisé avec ce mot. Comme alternative à « AVIS », le mot « ATTENTION » sans symbole d'avertissement peut être utilisé pour indiquer un message non lié à des blessures corporelles.

DANGER

AVERTISSEMENT

ATTENTION

REMARQUE

REMARQUE

APPAREIL ACCESSIBLE AU GRAND PUBLIC.

AVERTISSEMENT

Risque de choc électrique.

Ne pas faire fonctionner cet équipement sans qu'il soit relié à la terre et toujours débrancher les alimentations électriques avant de procéder aux opérations d'entretien.

Une électrisation peut entraîner des blessures graves ou la mort.

AVERTISSEMENT

Risque d'incendie.

Conserver un dégagement minimal de 6,35 mm/1/4 po entre le conduit d'air soufflé et les matériaux combustibles sur les 900 premiers millimètres (3 pi) du conduit.

Le non-respect de cette consigne entraîne des risques de dégâts matériels, de blessures corporelles ou de décès.

AVERTISSEMENT

Risque lié aux objets lourds.

Plusieurs personnes sont nécessaires à la manipulation de l'unité.

Le non-respect de cette consigne peut entraîner dégâts à l'unité ou des blessures graves.

⚠ AVERTISSEMENT

Risque de choc électrique.

Ces tâches doivent être réalisées par une personne parfaitement qualifiée et formée.

Le non-respect de cette consigne peut entraîner des chocs électriques ou la mort.

⚠ ATTENTION

Arêtes métalliques vives.

Faites attention et portez des dispositifs de protection appropriés pour éviter tout contact accidentel avec des arêtes vives.

Le non-respect de cette consigne peut entraîner des blessures corporelles.

Les symboles suivants sont affichés sur les unités.

Ce symbole indique que le manuel d'utilisation doit être lu attentivement.

Ce symbole indique qu'un membre du personnel de service devrait manipuler cet équipement en se référant au manuel d'installation.

Ce symbole indique que des informations sont disponibles telles que le manuel d'utilisation ou le manuel d'installation.

INSTRUCTIONS DE SÉCURITÉ IMPORTANTES

⚠ AVERTISSEMENT

Pour réduire le risque d'explosion, d'incendie, de décès, de choc électrique, d'échaudure ou de blessures pour les personnes lors de l'utilisation de ce produit, suivez les précautions de base, notamment les suivantes :

GÉNÉRALITÉS

- L'équipement couvert dans ce manuel doit être installé par des techniciens de service et d'installation formés et expérimentés.
- Cet appareil n'est pas destiné à être utilisé par des personnes (y compris des enfants) ayant des capacités physiques, sensorielles ou mentales réduites, ou un manque d'expérience et de connaissances, à moins qu'elles n'aient reçu la supervision ou l'instruction concernant l'utilisation de l'appareil par une personne responsable de leur sécurité.
- Le système de réfrigérant est complètement assemblé et chargé. Tout le câblage interne est complet.
- L'unité est conçue pour être utilisée avec ou sans conduits. Des brides sont prévues pour fixer les conduits d'alimentation et de retour.
- Ces instructions expliquent la méthode recommandée pour installer l'unité autonome refroidie à l'air et les connexions de câblage électrique à l'unité.
- Ces instructions et toutes les instructions emballées avec tout équipement distinct requis pour constituer l'ensemble du système de climatisation doivent être lues attentivement avant de commencer l'installation. Notez en particulier « Procédure de démarrage » et les étiquettes et / ou étiquettes attachées à l'équipement.
- Bien que ces instructions soient conçues comme un guide général recommandé, elles ne remplacent en aucune façon les codes nationaux et/ou locaux. Les autorités compétentes devraient être consultées avant que l'installation ne soit effectuée. Voir d'autres publications pour obtenir des renseignements sur les codes et les normes.
- La taille de l'unité pour une installation proposée devrait être basée sur le calcul de la perte de chaleur effectué selon les méthodes de Air Conditioning Contractors of America (ACCA). Le conduit d'air devrait être installé conformément aux Normes de la National Fire Protection Association for the Installation of Air Conditioning and Ventilating Systems of Other Than Residence Type, NFPA No. 90A, et aux Systèmes de chauffage et de climatisation d'air chaud de type résidence, NFPA No. 90B. Lorsque les réglementations locales sont en contradiction avec les instructions, l'installateur doit respecter les codes locaux.

L'INSTALLATION

- Ce produit n'est pas destiné à être utilisé à des altitudes supérieures à 2 000 mètres (6 561 pieds). Pour les appareils destinés à être utilisés à des altitudes supérieures à 2 000 m (6 561 pieds), l'altitude maximale d'utilisation doit être indiquée.
- Avant utilisation, l'appliance doit être correctement installée comme décrit dans ce manuel.
- Communiquez avec le technicien d'entretien autorisé pour la réparation ou l'entretien de cette unité.
- Contactez le programme d'installation pour l'installation de cet appareil.
- Le climatiseur n'est pas destiné à être utilisé par de jeunes enfants ou des invalides sans surveillance.
- Les jeunes enfants devraient être surveillés pour s'assurer qu'ils ne jouent pas avec le climatiseur.
- Les travaux d'installation doivent être effectués conformément au Code national de l'électricité par du personnel qualifié et autorisé uniquement.
- Connectez-vous à un circuit d'alimentation correctement évalué, protégé et dimensionné pour éviter les surcharges électriques.
- Respectez toutes les procédures de sécurité recommandées par l'industrie, y compris l'utilisation de gants à manches longues et de lunettes de sécurité.
- Faites attention lors du déballage et de l'installation. Les bords du produit peuvent être tranchants.
- Gardez les matériaux d'emballage hors de la portée des enfants. Ces matériaux peuvent poser un risque d'étouffement pour les enfants.

OPÉRATION

- Cet appareil n'est pas destiné à être utilisé par des personnes (y compris des enfants) ayant des capacités physiques, sensorielles ou mentales réduites, ou un manque d'expérience et de connaissances, à moins qu'elles n'aient reçu une supervision ou une instruction concernant l'utilisation de l'appareil par une personne responsable de leur sécurité.
- Utilisez cet appareil uniquement aux fins prévues.
- N'essayez jamais de faire fonctionner cet appareil s'il est endommagé, défectueux, partiellement démonté ou s'il a des pièces manquantes ou cassées.
- Ne pas altérer les contrôles.

GENERAL INFORMATION

General

The equipment covered in this manual is to be installed by trained, experienced service and installation technicians.

This appliance is not intended for use by persons (including children) with reduced physical, sensory or mental capabilities, or lack of experience and knowledge, unless they have been given supervision or instruction concerning use of the appliance by a person responsible for their safety.

Children should be supervised to ensure that they do not play with the appliance.

The refrigerant system is completely assembled and charged. All internal wiring is complete.

The unit is designed for use with or without duct work. Flanges are provided for attaching the supply and return ducts.

These instructions explain the recommended method to install the air cooled self-contained unit and the electrical wiring connections to the unit.

These instructions and any instructions packaged with any separate equipment required to make up the entire air conditioning system should be carefully read before beginning the installation. Note particularly "Starting Procedure" and any tags and/or labels attached to the equipment.

While these instructions are intended as a general recommended guide, they do not supersede any national and/or local codes in any way. Authorities having jurisdiction should be consulted before the installation is made. See **Additional Publications** for information on codes and standards.

Size of unit for a proposed installation should be based on heat loss calculation made according to methods of Air Conditioning Contractors of America (ACCA). The air duct should be installed in accordance with the Standards of the National Fire Protection Association for the Installation of Air Conditioning and Ventilating Systems of Other Than Residence Type, NFPA No. 90A, and Residence Type Warm Air Heating and Air Conditioning Systems, NFPA No. 90B. Where local regulations are at a variance with instructions, installer should adhere to local codes.

Shipping Damage

Upon receipt of equipment, the carton should be checked for external signs of shipping damage. If damage is found, the receiving party must contact the last carrier immediately, preferably in writing, requesting inspection by the carrier's agent.

Additional Publications

These publications can help when installing the heat pump. They can usually be found at the local library or purchased directly from the publisher. Be sure to consult the current edition of each standard.

National Electrical Code.....ANSI/NFPA 70

Standard for the Installation of Air Conditioning and Ventilating Systems
.....ANSI/NFPA 90A

Standard for Warm Air Heating and Air Conditioning Systems
.....ANSI/NFPA 90B

Load Calculation for Winter and Summer Air Conditioning
..... ACCA Manual J Residential

Duct Design for Residential Winter and Summer Air Conditioning and Equipment Selection
..... ACCA Manual D

For more information, contact these publishers:

ACCA **Air Conditioning Contractors of America**
1712 New Hampshire Ave. N.W.
Washington, DC 20009
Telephone: (202) 483-9370
Fax: (202) 234-4721

ANSI **American National Standards Institute**
11 West Street, 13th Floor
New York, NY 10036
Telephone: (212) 642-4900
Fax: (212) 302-1286

ASHRAE **American Society of Heating, Refrigeration and Air Conditioning Engineers, Inc.**
1791 Tullie Circle, N.E.
Atlanta, GA 30329-2305
Telephone: (404) 636-8400
Fax: (404) 321-5478

NFPA **National Fire Protection Association**
Batterymarch Park
P.O. Box 9101
Quincy, MA 02269-9901
Telephone: (800) 344-3555
Fax: (617) 984-7057

Heat Pump Wall Mount Model Nomenclature

W 42 H Y – A 0Z X X X X X X

MODEL SERIES

CAPACITY
42 – 3½ Ton
48 – 4 Ton
60 – 5 Ton

H – Heat Pump

REVISION

SPECIAL CONFIGURATION
(–) – Standard System
D – Dehumidification

ELECTRICAL
A – 230/208/60/1
B – 230/208/60/3
C – 460/60/3

ELECTRIC HEAT
00 – No Electric Heat, No Circuit Breaker
0Z – No Electric Heat, w/Circuit Breaker
05 – 5KW Electric Heat
06 – 6KW Electric Heat
09 – 9KW Electric Heat
10 – 10KW Electric Heat
12 – 12KW Electric Heat
15 – 15KW Electric Heat

VENT
X – Fresh Air Damper, No Exhaust
A – Fresh Air Damper, w/Exhaust
B – Blank-Off Plate
D – DDC/BrightStat, 0-10V Economizer
M – Commercial Room Ventilator, ON/OFF Operation Only
R – Energy Recovery Ventilator
V – Commercial Ventilator, Modulating Operation w/Board
Y – Full Flow Economizer w/JADE, Dry Bulb
Z – Economizer, DB & WB, Full Flow

FILTER
X – 1" Throwaway (Standard)
W – 1" Washable
P – 2" MERV 8
M – 2" MERV 11
N – 2" MERV 13
A – 2" MERV 13 with UVC-LED Light
B – 2" MERV 13 with NPBI TECH

COLOR OPTIONS
X – Beige
1 – White
4 – Gray
5 – Desert Brown
8 – Dark Bronze
A – Aluminum
S – Stainless Steel

PLACEHOLDER
X – Standard Front Outlet
J – Recessed Cabinet, Blow Thru

COIL OPTIONS
X – Standard
1 – Phenolic Coated Evaporator
2 – Phenolic Coated Condenser
3 – Phenolic Coated Evaporator and Condenser
4 – 3rd Party Unit Coating: Condenser
5 – 3rd Party Unit Coating: Entire Unit

CONTROL
X – None (Standard)
E – Low Ambient Control
F – Filter Replacement Pressure Switch, Alarm Relay & Low Ambient Control
J – Alarm Relay & Low Ambient Control
K – Start Kit & Low Ambient Control
M – Start Kit, Low Ambient Control & Alarm Relay
V – DDC Controls

Duct Work

All duct work, supply and return, must be properly sized for the design airflow requirement of the equipment. Air Conditioning Contractors of America (ACCA) is an excellent guide to proper sizing. All duct work or portions thereof not in the conditioned space should be properly insulated in order to both conserve energy and prevent condensation or moisture damage.

Refer to Maximum ESP of Operation Electric Heat table on page 47.

Design the duct work according to methods given by the Air Conditioning Contractors of America (ACCA). When duct runs through unheated spaces, it should be insulated with a minimum of 1" of insulation. Use insulation with a vapor barrier on the outside of the insulation. Flexible joints should be used to connect the duct work to the equipment in order to keep the noise transmission to a minimum.

All model series require a 1/4" clearance to combustible material for the first 3' of duct attached to the outlet air frame is required. See wall mounting instructions on page 17 and Figures 14 – 18 (pages 20 – 23) for further details.

Ducts through the walls must be insulated and all joints taped or sealed to prevent air or moisture entering the wall cavity.

Some installations may not require a return air duct. A metallic return air grille is required with installations not requiring a return air duct. The spacing between louvers on the grille shall not be larger than 5/8".

Any grille that meets with 5/8" louver criteria may be used. It is recommended that Bard Return Air Grille Kits RG5 or RFG5 be installed when no return duct is used. Contact distributor or factory for ordering information. If using a return air filter grille, filters must be of sufficient size to allow a maximum velocity of 400 fpm.

NOTE: *If no return air duct is used, applicable installation codes may limit this cabinet to installation only in a single story structure.*

Filters

The filters can be serviced from the outside by removing the front control panel cover (see Figure 1). Two (2) 20" x 20" x 1" throwaway filters come standard with each unit. Additional 1" and 2" filter options are available as optional accessories. To be notified when filters need changed, a dirty filter switch option is available. See page 48 for the dirty filter switch kit.

FIGURE 1
Front Control Panel Cover

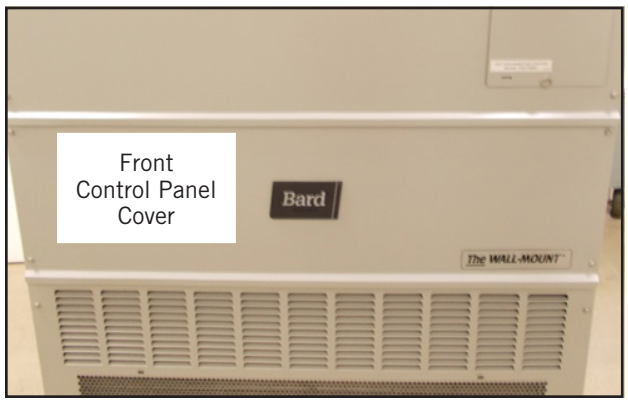

Filter Removal/Installation

1. Remove left filter first by pulling filter removal slide out (see Figure 2).

FIGURE 2
Removing Left Filter

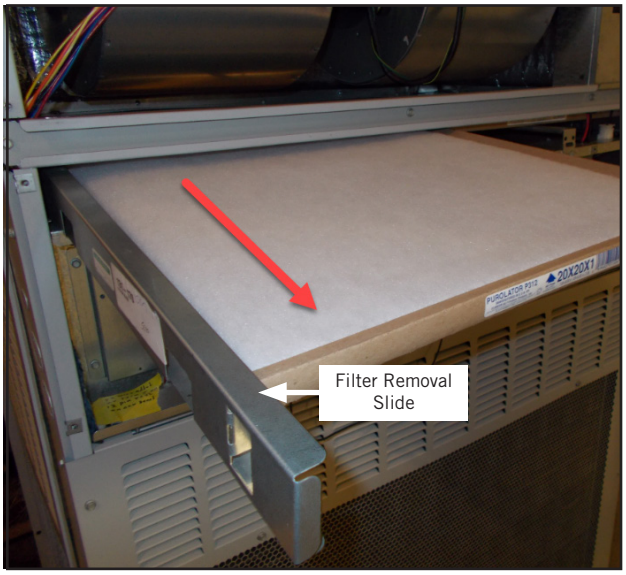

2. Slide second filter to the left around the wires and pull the filter out (see Figure 3 on page 6).

FIGURE 3
Removing Second Filter

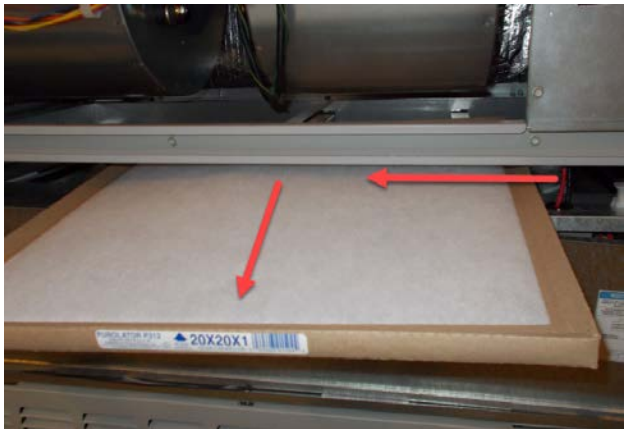

3. Reverse the order for new filter installation.

NOTE: *When installing new filters, make sure that airflow arrows on filters point up.*

Switching Filter Sizes

1. To switch from 1" to 2" filters, start by removing the filter slide and bend the tabs down out of the way (see Figures 4 and 5).

FIGURE 4
Filter Tabs in Up Position

FIGURE 5
Bend Filter Tabs Down

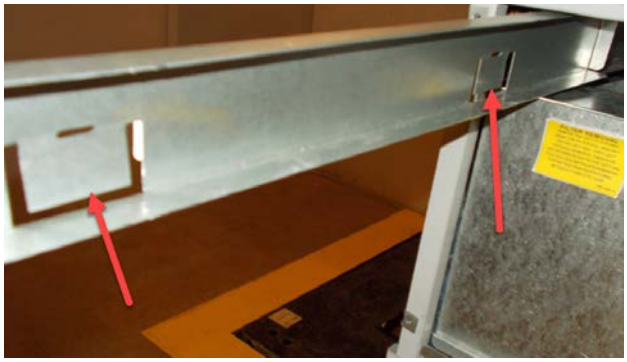

2. Locate the filter support brackets and remove the four (4) screws holding them to the top of the control panel (see Figure 6).

FIGURE 6
Remove Four Screws

3. Pull the brackets out towards the front of the unit. The back of the bracket will slip out of the upper slots at the back of the filter tray.
4. Re-install the filter support brackets into the lower slots at the back of the filter tray (see Figure 7).

FIGURE 7
Re-Install Filter Support Brackets into Lower Slots

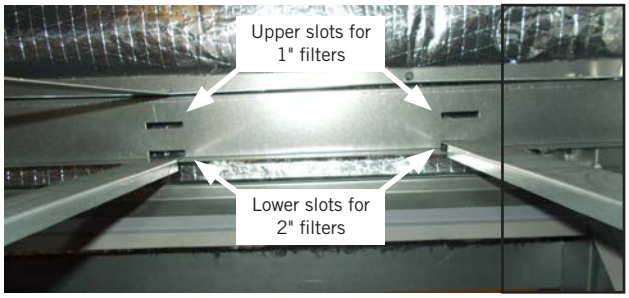

5. Re-install the four (4) hex head screws into the upper screw holes on the filter support brackets. Then bend the tab up out of the way (see Figure 8).

FIGURE 8
Re-Install Screws and Bend Tabs Up

6. Install the right 2" filter first followed by the left filter (see Figures 9 and 10).

NOTE: *When installing new filters, make sure that airflow arrows on filters point up.*

7. Reverse the steps above to switch from 2" to 1" filters.

FIGURE 9
Install Right 2" Filter

FIGURE 10
Install Left 2" Filter

Fresh Air Intake

All units are built with fresh air inlet louvers punched in the side grilles.

If the unit is equipped with a fresh air damper assembly, the assembly is shipped already attached to the unit. The damper blade is locked in the closed position. To allow the damper to operate, remove the two (2) hex head screws in the bottom of the blade (see Figure 11). Remove right side grille to access the damper blade.

FIGURE 11
Fresh Air Damper

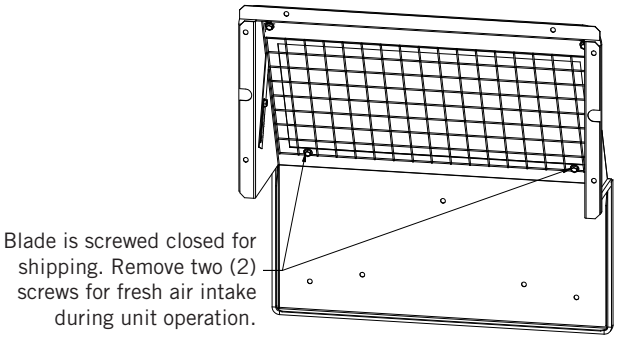

MIS-3977

There is an adjustable slide on the side of the fresh air intake that can be adjusted to limit how far the damper opens so that the amount of fresh air that enters the structure is regulated.

Graphs found on pages 50 and 51 give approximate fresh air amounts based on the slide adjustment setting.

All capacity, efficiency and cost of operation information is based upon the fresh air blank-off plate in place.

The blank-off plate is available upon request from the factory and is installed in place of the fresh air damper shipped with each unit.

Basic Installation Design and Application Planning

Successful unit installations require proper planning and site inspection before installation begins. Before installing the wall mount unit, make sure that all service and airflow clearances are met and that the unit can meet all applicable code and regulation requirements. Provide an inspection of both the inside and outside of the structure by reviewing floorplans and/or visiting the installation site.

Wall Construction

The wall must be inspected to ensure that the weight of the unit can be supported. Be sure to review all applicable construction codes and regulations including seismic requirements. When inspecting wood frame walls, the wall construction must be strong and rigid enough to carry the weight of the unit without transmitting any unit vibration. It is important that the side unit wall mounting lags and optional bottom bracket are supported by structural members inside the wall cavity. Concrete block and brick walls must be thoroughly inspected to ensure that they are capable of carrying the weight of the installed unit. Metal buildings must contain structural components to support the unit weight. If heavily corrugated siding is present, it may need to be trimmed and flashed similar to a window to provide a flat, even surface to attach and seal the unit to the wall. Heavy gauge corrugations that would be present on shipping containers and blast-proof structures may require the installation of a metal plate over the corrugated area. It is important that the unit area is weatherized and sealed to avoid air and water infiltration into the area between the unit and the wall.

Outdoor Area Inspection

Inspect the outdoor area of the jobsite or review construction plans and locate the area where the wall mount is to be installed. The outdoor area must be free from obstructions including fences, bushes and walls that will hinder unit operation regarding outdoor condenser airflow and unit serviceability. Do not install units in enclosed areas that limit the amount of ambient temperature airflow. Warm air will exit the front condenser section of the unit, and outdoor ambient temperature air must be able to enter side intake condenser openings of the unit. Portable or modular building placement must be in a way that the wall mount units have a constant supply of outdoor air for proper unit operation. Make sure that the service panels of the unit are accessible. Inspect wall surfaces for obstructions that could hinder unit installation and servicing including outdoor electrical conduits, junction boxes, wall drains, vent hoods, windows, doors, overhangs and posts.

Condensate Water Drainage

Review all codes and requirements for unit condensate drainage. A clear, flexible PVC drain hose (3/4" ID, 1" OD) extends from the drain pan in the upper section of the unit and extends down to the unit base. An opening is supplied towards the back of the unit base for the drain hose to pass through, and the hose extends 1" to 2" below the unit base. Water removed from the indoor air (condensate) will be expelled from the unit in large amounts during cooling operation through the hose. Units running in cooling operation in cold outdoor below freezing conditions can cause the condensate to freeze after leaving the drain hose. In the event the drain hose is connected to a drain system of some type, it must be an open or vented type system to ensure proper drainage throughout seasonal use.

Indoor Ducted and Non-Ducted Applications

Air distribution inside the structure being conditioned plays an important role in making sure the area is a consistent temperature. Improper air distribution can result in areas being cooler or warmer, electrical equipment not receiving sufficient airflow or occupancy discomfort felt inside an area. Thermostat or indoor temperature sensor placement inside the area being conditioned also plays an important role in indoor climate control.

Indoor Supply Airflow

Indoor installation areas must provide a non-restrictive path for the conditioned supply air to leave supply grilles and registers. Inspect the area to ensure that all indoor portions of the room or rooms will have access to supply air. Ductwork may be used to ensure proper air circulation and all provided ductwork guidelines and clearances must be followed. Non-ducted applications must use a supply louver grille installed over the supply opening inside the room. Be sure to adjust supply deflectors to properly disperse the conditioned supply air to all parts of the room. Avoid closing sections of the supply grilles which would cause unneeded supply duct pressurization.

Indoor Return Airflow

A non-restrictive path for room air returning to the center section of the unit must be provided inside the room. Avoid placing objects including furniture, electronics equipment, equipment racks and cabinets directly in front of the unit return grilles and registers. Bard recommends at least 2' between solid objects and return grilles or registers. Ductwork may be used to ensure proper air circulation and all provided ductwork guidelines and clearances must be followed. Non-ducted applications must use a return louver grille installed over the return opening inside the room.

Ducted Applications

Field fabricated supply and return duct work may be installed inside the structure being conditioned. A short supply and/or return stub duct may be connected to the unit supply and return flanges before unit installation to help with duct connections inside the structure. Supply and return ducts must be properly sized for the design airflow requirement of the equipment. Air Conditioning Contractors of America (ACCA) is an excellent guide to proper sizing. All duct work or portions thereof not in the conditioned space should be properly insulated in order to conserve energy, reduce heat conductivity, and prevent condensation or moisture damage. Refer to Maximum External Static Pressure (ESP) of Operation table on page 47. Design the duct work according to methods given by the Air Conditioning Contractors of America (ACCA). When duct work is installed in unheated spaces, it should be insulated with a minimum of 1" of insulation. Use insulation with a vapor barrier on the outside of the insulation. Flexible joints should be used to connect the duct work to the equipment in order to keep the noise transmission to a minimum. Ducts through the walls must be insulated and all joints taped or sealed to prevent air or moisture from entering the wall cavity.

All model series require a 1/4" clearance to combustible material for the first 3' of duct attached to the outlet air frame is required. See instructions on page 17 and Figures 14 – 18 (pages 20 – 23) for further details.

⚠ WARNING

Fire hazard.

Maintain minimum 1/4" clearance between the supply air duct and combustible materials in the first 3' of ducting.

Failure to do so could result in fire causing damage, injury or death.

Free Blow Applications

Some installations may not require extensive supply duct work throughout the structure and are referred to as free blow applications. A short field-fabricated supply duct must be used in the wall cavity to transition between the supply collar on the unit and the supply louver grille in the room. The duct must be properly insulated in order to conserve energy, reduce heat conductivity and prevent condensation or moisture damage. All joints must be taped or sealed to prevent air or moisture entering the wall cavity. Follow all clearances including distances to combustible materials and all instructions provided in this manual.

A non-restrictive metallic supply air grille with deflectors is required for free blow applications. Contact the local Bard distributor or visit www.bardhvac.com for ordering information.

A metallic return air grille is required for non-ducted applications. The spacing between louvers on the grille shall not be larger than 5/8". It is recommended that a Bard Return Air Grille Kit is installed that is designed specifically for the wall mount product. Contact the local Bard distributor or visit www.bardhvac.com for ordering information. A field-supplied return grille that meets the 5/8" louver criteria and does not cause the unit to exceed the maximum specified external static pressure (ESP) may be used. If using a return air filter grille, filters must be of sufficient size to allow a maximum velocity of 400 fpm. Filter return air grilles do not filter air being brought into the structure through ventilation options including fresh air dampers, ventilators, economizers and energy recovery ventilators. Be sure to install the return grille with the louvers pointed downward towards the floor. This will help ensure return air is drawn upward from the floor and improve air circulation in the room.

NOTE: *If no return air duct is used, applicable installation codes may limit this cabinet to installation only in a single story structure.*

Thermostat or Indoor Temperature Sensor Placement

The location and installation of the thermostat or temperature sensor that monitors indoor temperature is very important regarding unit operation. Avoid placing the thermostat in an area exposed to direct sunlight or air from doorways leading outdoors. Use a piece of insulating material to close off conduit openings or holes in the wall surface for wire entry into the thermostat or temperature sensor. This will help avoid non-conditioned air from entering the thermostat and effecting temperature and/or humidity readings. As common practice, the thermostat or temperature sensor should measure the temperature of the air being returned to the unit, and not the conditioned air being supplied by the unit. Placing the thermostat or temperature sensor near a return air opening will normally result in optimal unit performance.

Unit Installation

Make sure to have the proper tools at the work site that are needed for unit installation. The following steps are provided to ensure the unit is installed properly to the wall surface, and that the unit will provide years of service with minimal service requirements.

Materials/Tools List

Additional hardware and miscellaneous supplies are needed for installation. These items are field supplied and must be sourced before installation. This list also includes tools needed for installation.

- Appropriate safety gear including gloves and safety glasses
- 5/16" hex bit with drill driver
- Phillips head screwdriver
- Small straight (thermostat) screwdriver
- Tape measure
- Leveling device
- Two (2) tubes of caulk and caulk gun
- Utility knife
- Tools for cutting holes in the wall surface (if needed)
- Electrical components and wiring along with electrical tools
- Multimeter
- Wall fasteners for side flanges, bottom mounting bracket and top rain flashing.
- Duct tape and/or other duct sealing materials.

Wall Preparation

1. Two holes for the supply and return air openings must be cut through the wall as shown in Figure 14 on page 20. Be sure the openings are square and level. Follow all clearances including distances to combustible materials and all instructions provided in this manual.
2. Review all electrical requirements provided in this manual and plan out electrical entrances into the building. Also plan electrical conduit routing and thermostat placement, if necessary.
3. Install necessary duct work and prepare the openings for unit installation.
4. Clean the exterior wall where the unit is to be installed and make sure it is able to provide a smooth, level, debris-free surface. Remove all construction debris from the supply, return and electrical hole cutting process.

Wall Mount Installation to Wall Surface

1. Remove packaging from unit and make sure the unit is not damaged before installation. A top rain flashing is supplied for field use and is mounted to the back of the unit for shipping. Remove the rain flashing before locating the unit against the wall. Top rain flashing is required to avoid water entering the area behind the unit that is against the wall. A bottom mounting bracket, attached to the skid for shipping, is provided for ease of installation but is not required. Review all requirements listed on unit labels and on serial plate located on the side of the unit.
2. Locate and mark bolt hole locations and bottom mounting bracket location. Install bottom mounting bracket with field-supplied fasteners to wall if it is to be used (optional). Bracket must be level and installed in the correct location to help support the unit during the installation process (see Figure 14).
3. Position the wall mount unit close to the wall surface where it will be installed. Install rain flashing at the top of the unit facing the wall by hooking the hem bend into the rear bend of the unit top (see Figure 14).
4. Apply a liberal amount of caulk on left and right cabinet side wall mount brackets and back of top rain flashing. Place unit back surface flush against wall. Unit must be level to ensure proper condensate drainage. Optional bottom bracket may be used to help support the unit.
5. Units are secured to the wall by using field-supplied fasteners along each side of the wall mount through the built-in wall mounting brackets. It is the responsibility of the installer to select the proper fastener to secure the unit to the wall based on wall construction and applicable building codes. Typical installations may include 5/16" fasteners with 7/8" diameter flat washers. Be sure unit is securely mounted and all weight-bearing fasteners are attached to the weight supporting structural members of the wall.
6. Apply a bead of caulk between the back of the unit top and the front surface of the top rain flashing (see Figure 14).
7. Connect unit duct work from the inside of the building following all clearances and instructions provided. For additional mounting rigidity, the return air and supply air frames or collars can be drilled and screwed or welded to the structural wall itself (depending upon wall construction). Be sure to use code approved duct tape or other sealing materials to seal the duct work to the unit.
8. On side-by-side installations, maintain a minimum of 20" clearance on both sides to allow access to heat strips and to provide proper airflow to the outdoor coil. Additional clearance may be required to meet local or national codes.

TABLE 1
Clearance Required for Service Access and Adequate Condenser Airflow

Model	Left Side*	Right Side*	Discharge – Front
W42HY W48HY W60HY	20"	20"	10'

* For vent installation and removal, one side of the unit requires 45" clearance in the vent area. See Figure 12 for clarity.

See Specifications Sheet S3643.

TABLE 2
Minimum Clearances Required to Combustible Materials

Model	Supply Air Duct (1st 3')	Cabinet
W42HY W48HY W60HY	1/4"	0"

FIGURE 12
Vent Installation/Removal Clearance Required

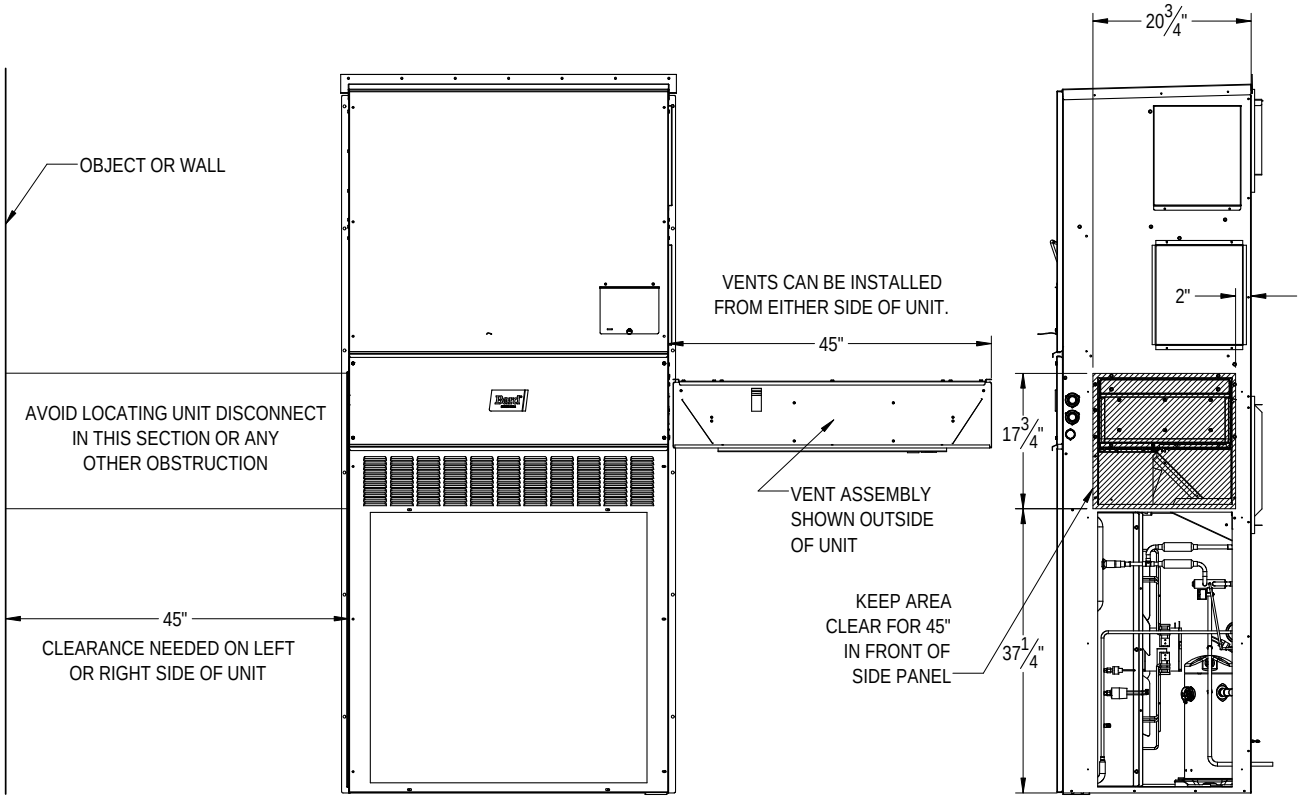

MIS-4042 A

FIGURE 13
Unit Dimensions

	Width (W)	Depth (D)	Height (H)	Supply		Return																
				A	B	C	B	E	F	G	I	J	K	L	M	N	O	R	S	T	U	V
W42HY W48HY	42.00	25.52	84.75	9.88	29.88	15.88	29.88	43.88	12.63	39.06	30.06	43.25	26.94	55.59	52.59	8.82	43.00	1.44	16.00	1.88	10.50	12.00
W60HY	42.00	25.52	92.88	9.88	29.88	15.88	29.88	43.88	12.63	45.00	30.06	49.25	35.06	61.72	58.72	8.82	43.00	1.44	16.00	10.00	13.88	15.43

All dimensions are in inches. Dimensional drawings are not to scale.

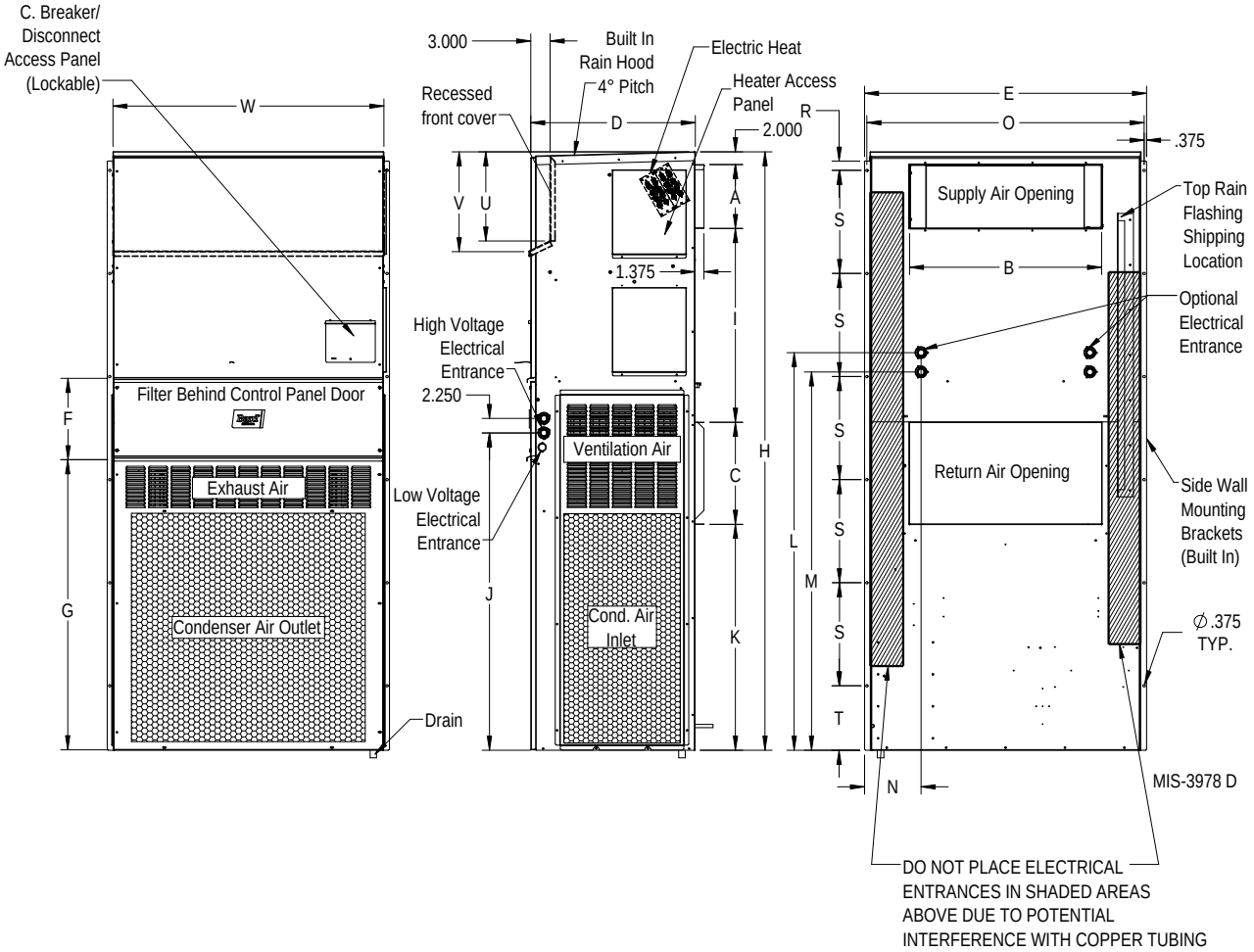

FIGURE 14
Mounting Instructions

UNITS	REQUIRED DIMESIONS	A	B	C	D	E	F	G
W42HY-W48HY UNITS	REQUIRED DIMESIONS TO MAINTAIN 1/4" MIN. CLEARANCE FROM COMBUSTIBLE MATERIALS	30 1/2	10 1/2	6 1/4	1 1/4	29 3/4	16	1 7/8
	REQUIRED DIMENSIONS TO MAINTAIN RECOMMENDED 1" CLEARANCE FROM COMBUSTIBLE MATERIALS	32	12	5 1/2	2	29	16	1 7/8
W60HY UNITS	REQUIRED DIMESIONS TO MAINTAIN 1/4" MIN. CLEARANCE FROM COMBUSTIBLE MATERIALS	30 1/2	10 1/2	6 1/4	1 1/4	29 3/4	16	10
	REQUIRED DIMENSIONS TO MAINTAIN RECOMMENDED 1" CLEARANCE FROM COMBUSTIBLE MATERIALS	32	12	5 1/2	2	29	16	10

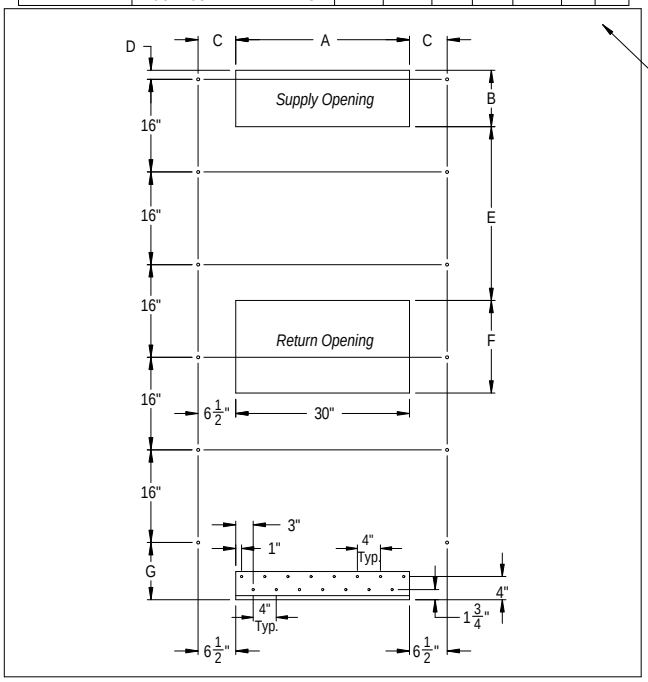

Wall Opening and Hole Location View

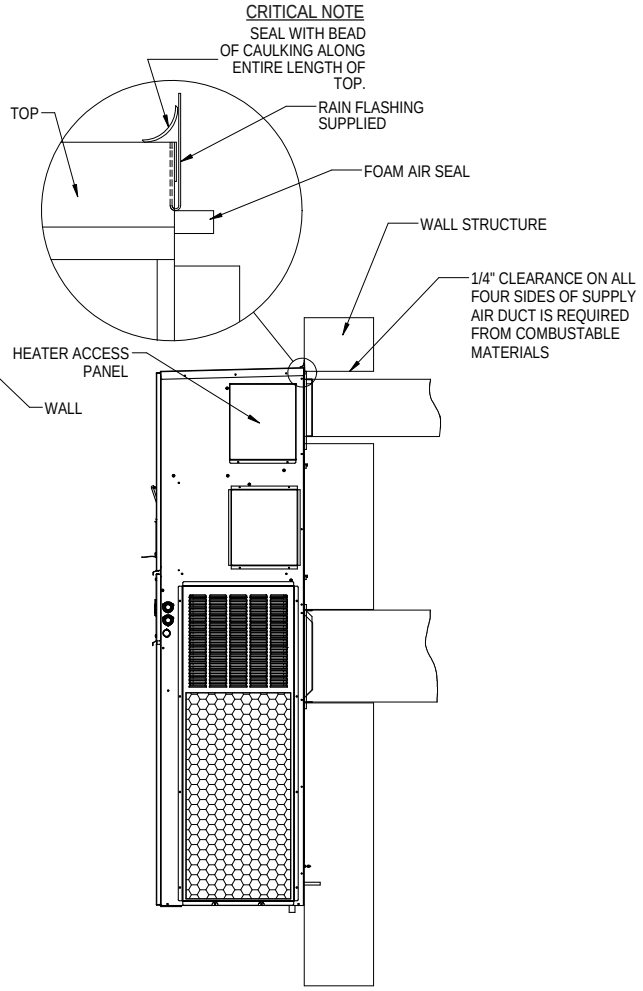

Right Side View

MIS-4087 B

FIGURE 15
Electric Heat Clearance

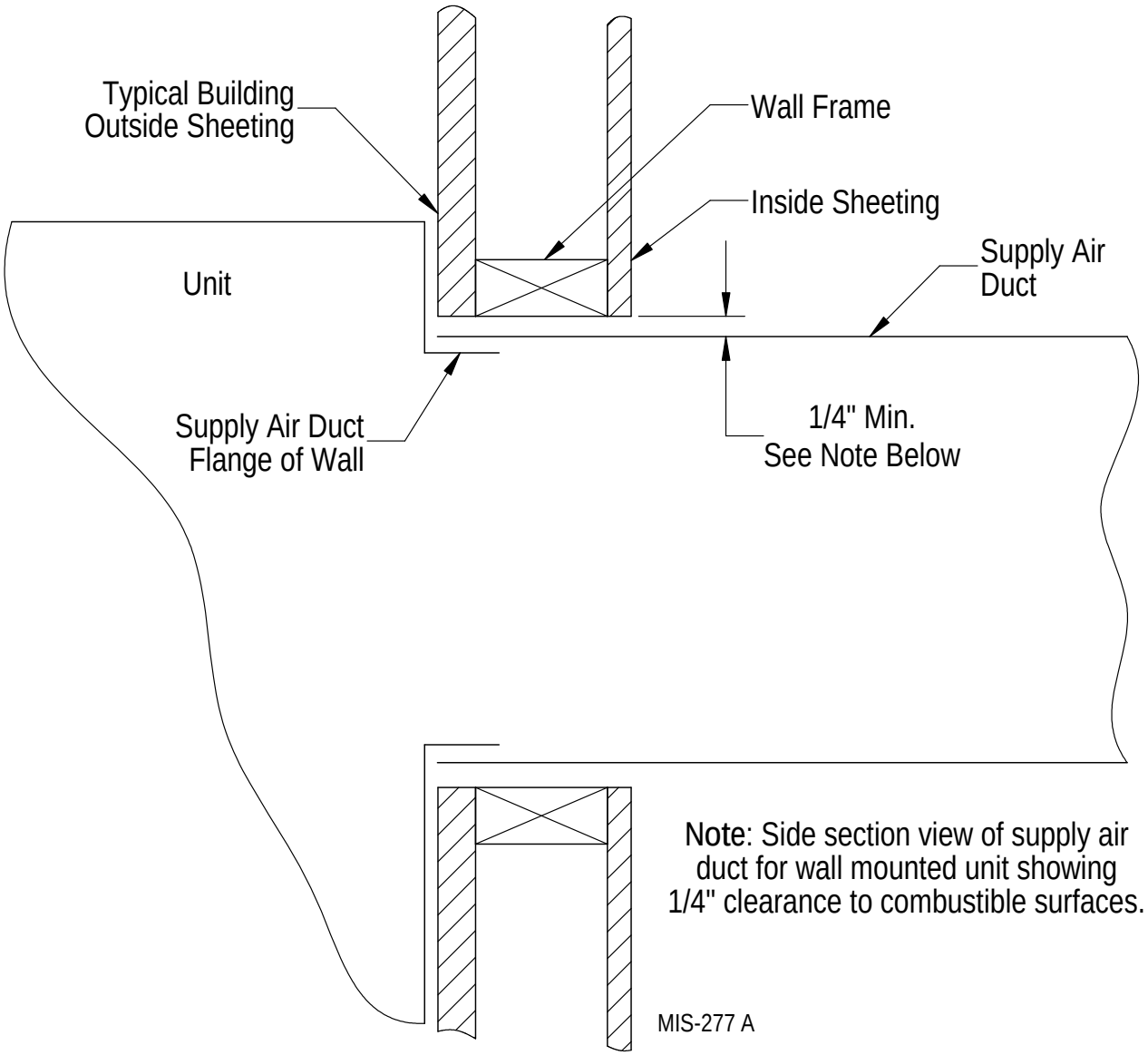

⚠ WARNING

Fire hazard.

Maintain minimum 1/4" clearance between the supply air duct and combustible materials in the first 3' of ducting.

Failure to do so could result in fire causing damage, injury or death.

FIGURE 16
Wall Mounting Instructions

See Figure 14 Mounting Instructions

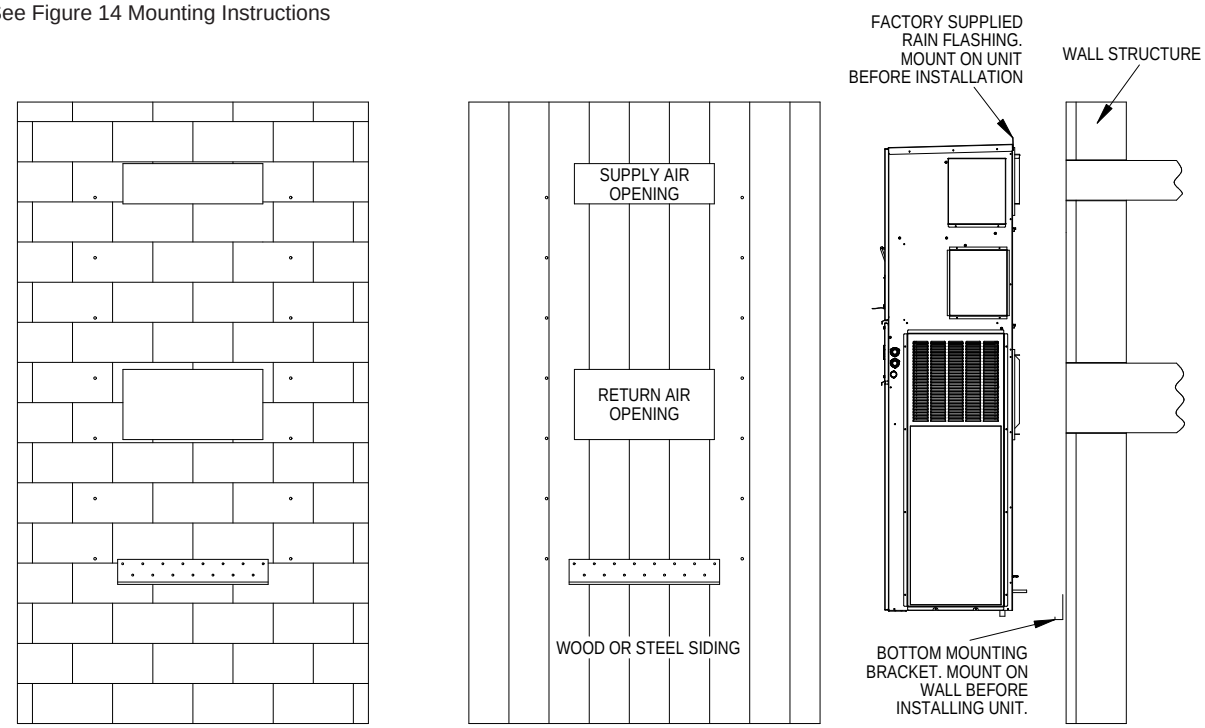

MIS-3981 B

FIGURE 17
Wall Mounting Instructions

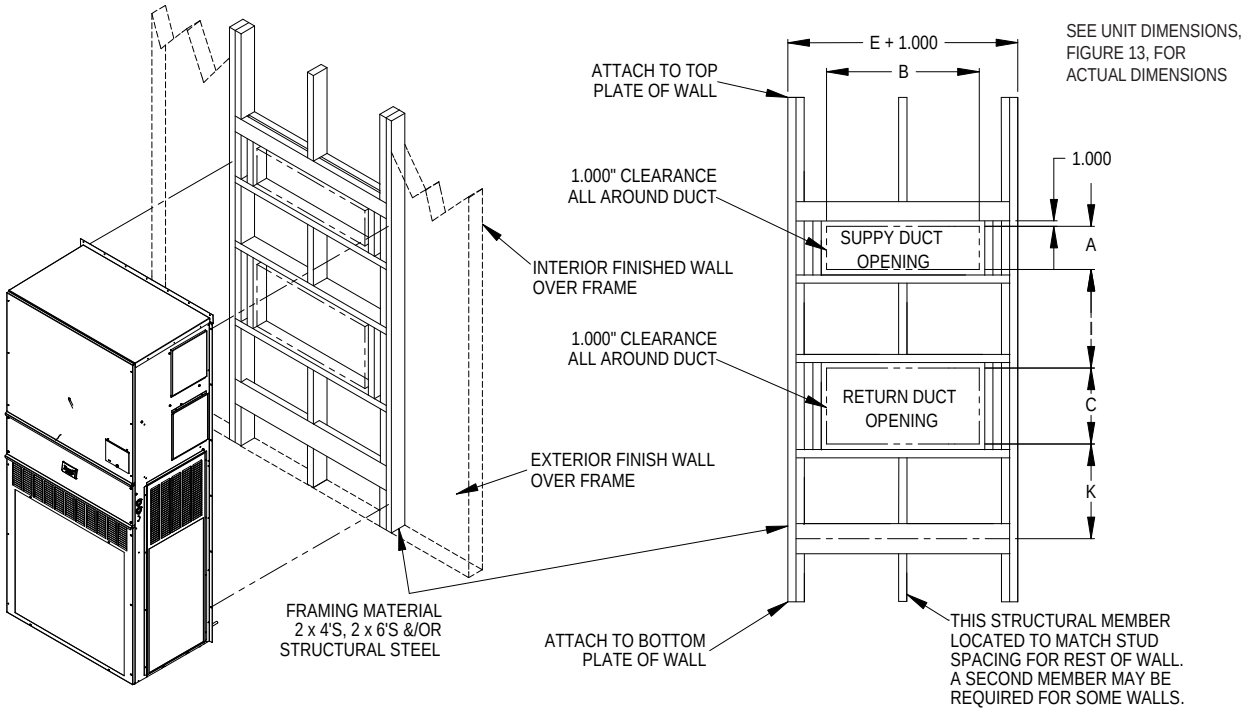

MIS-3982 B

FIGURE 18
Common Wall Mounting Installations

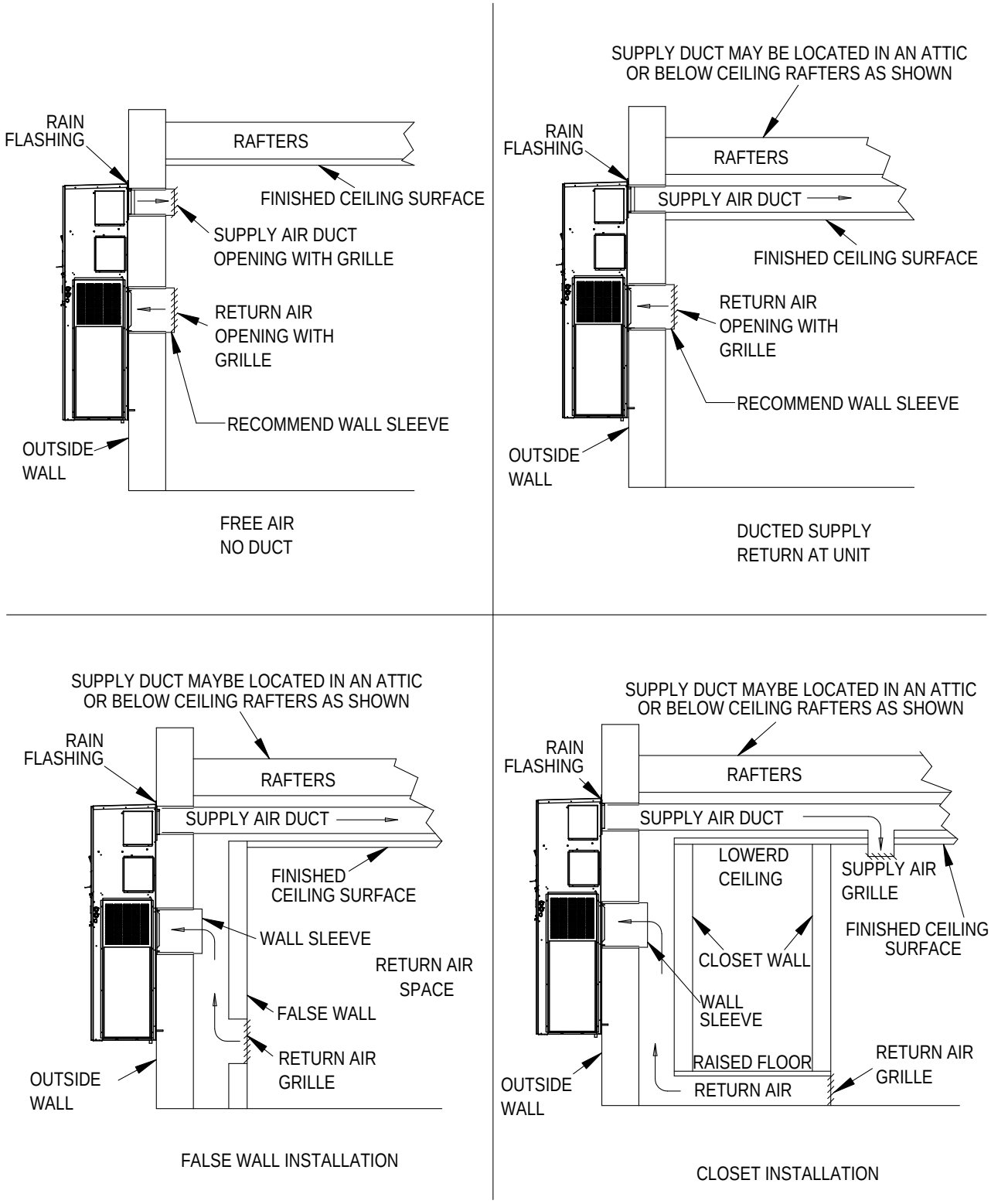

Wiring – Main Power

⚠ WARNING

Electrical shock hazard.

Do not operate this equipment without an earth ground attached and always disconnect the remote electric power supplies before servicing.

Electrical shock can result in serious injury or death.

Main electrical power must be supplied to the unit from a clean, reliable power source. Verify voltage being supplied to the unit is consistent during all times of the day and within the range specified for the unit in the unit specifications and on the unit serial plate. Voltage must be measured at the field power connection point in the unit and while the unit is operating at full load (maximum amperage operating condition).

Refer to the unit serial plate and unit specifications for wire sizing information and maximum fuse or circuit breaker size. Each outdoor unit is marked with a "Minimum Circuit Ampacity". This means that the field wiring used must be sized to carry that amount of current. Depending on the installed KW of electric heat, there may be two field power circuits required. If this is the case, the unit serial plate will so indicate.

All models are suitable only for connection with copper wire. Each unit and/or wiring diagram will be marked "Use Copper Conductors Only". These instructions must be adhered to. Refer to the National Electrical Code (NEC) for complete current carrying capacity data on the various insulation grades of wiring material. All wiring must conform to NEC and all local codes.

The electrical data on the serial plate, in the unit specifications and also in Table 12 on page 41 list fuse sizes for all models including the most commonly used heater sizes. Also shown are the number of field power circuits required for the various models with heaters. The unit rating plate lists a "Maximum Time Delay Relay Fuse" or circuit breaker that is to be used with the equipment. The correct type and size must be used for proper circuit protection and also to ensure that there will be no nuisance tripping due to the momentary high starting current of the compressor motor.

Three phase models must have proper phasing. A phase monitor is included in all three phase models, and will indicate improper phasing during a call for cooling (24VAC at Y1 terminal). See provided information included in this document regarding the phase monitor.

High Voltage Connections

Route field wires under the field wire shield shown in Figure 19. (The field wire shield can be removed for wire installation.) If field power is supplied to the left side of the unit, run the high voltage wires under the shield shown in Figure 19 and to the right of the wire shield next to the compressor contactor and up into

FIGURE 19
High Voltage Connections

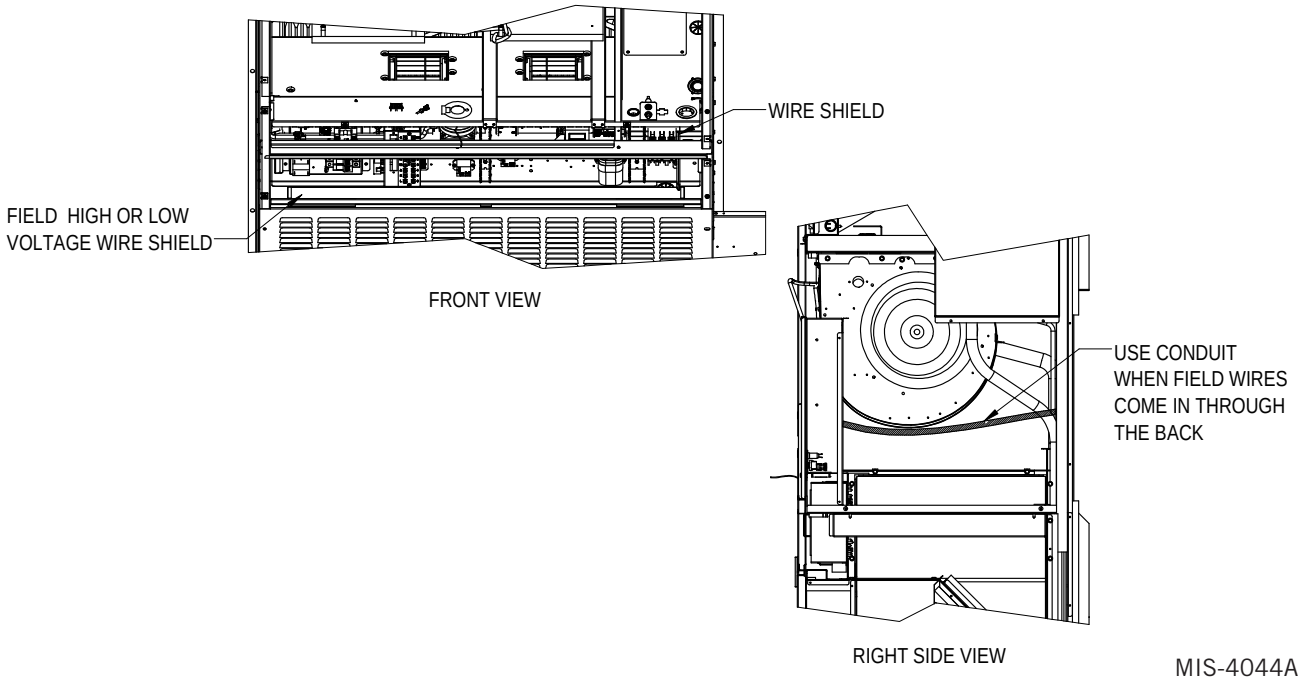

the upper control panel where the connections are made. (The field wire shield can be removed for wire installation.) If field power is supplied to the right of side of the unit, the low voltage wires can be run under the field wire shield to access the low voltage terminal strip.

When field wires are supplied through the back of the unit, flexible conduit must be extended through the back of the unit and terminate into the knock-outs on the upper control panel (see Figure 19).

Wiring – Low Voltage

All 230/208V 1 phase and 3 phase equipment have dual primary voltage transformers. All equipment leaves the factory wired on 240V tap. For 208V operation, reconnect from 240V to 208V tap. The acceptable operating voltage range for the 240 and 208V taps are:

Tap: 240 Range: 253 – 216
Tap: 208 Range: 215 – 197

NOTE: *The voltage should be measured at the field power connection point in the unit and while the unit is operating at full load (maximum amperage operating condition).*

For low voltage wiring, an 18 gauge copper, color-coded cable is recommended. See Table 7 on page 27 for more information.

Low Voltage Connections

These units use a 24-volt AC low voltage circuit.

C terminal is the *24VAC common and is grounded.*

G terminal is the *indoor blower input*.

Y1 terminal is the *1st Stage input for cooling.*

Y2 terminal is the *2nd Stage compressor input for cooling* (if equipped with an economizer) or *Y2 disables Balanced Climate mode if the Y1-Y2 jumper is removed* (see page 24).

B/W1 terminal is the *reversing valve input*. The reversing valve must be energized for heating mode.

W2 terminal is the *1st stage electric heat* (if equipped).

W3 terminal is the *2nd stage of electric heat* or *emergency heat* (if equipped).

A terminal is the *ventilation input*. This terminal energizes any factory-installed ventilation option and indoor blower.

D terminal is the *dehumidification input*. If installed, this terminal energizes any factory-installed dehumidification option.

L terminal is *24 volt alarm active output*.

For units equipped with an alarm relay:

1 terminal is the *normally closed contact on the relay.*
2 terminal is the *normally open contact on the relay.*
3 terminal is the *common contact on the relay.*

11 terminal is *filter switch, common contact* on auxiliary terminal strip *(F Control option only).*

12 terminal is *filter switch, normally open contact* on auxiliary terminal strip *(F Control option only).*

Unit Shutdown Feature (Standard on All Models)

The RT terminal is the 24VAC transformer output, and the R terminal is the 24VAC hot terminal for the operation of the equipment. RT and R are connected with a brass jumper bar which can be removed and RT and R connected to an external NC (normally closed) contact such as a fire/smoke detector that will cause shutdown of the equipment upon activation.

Balanced Climate™ Feature (Standard on All Models)

All units are equipped with the capability of running in Balanced Climate mode. This mode is designed to enhance the comfort level by reducing the indoor airflow amount and extending the run time to help extract more humidity during cooling operation. In heating mode, the reduced airflow provides a warmer supply air temperature creating more comfortable heat. The Y1 terminal is the 24VAC input for Balanced Climate compressor cooling operation. The Y2 terminal is the 24VAC input for compressor cooling standard operation. Y1 and Y2 are connected with a brass jumper bar which can be removed to enable Balanced Climate mode. Units with an economizer will not have the brass jumper installed. Refer to vent manuals for instructions on how Balanced Climate works with each vent.

NOTE: *Units with mechanical dehumidification require an additional connection to be made when enabling Balanced Climate. Refer to the dehumidification supplemental instructions for this step.*

To operate in Balanced Climate mode, a 2-stage heat pump thermostat is required. The lower indoor airflow operation is overridden by utilizing a 2-stage thermostat. If the call for cooling is not satisfied within a given time frame or temperature differential (specified by the thermostat), the thermostat will send a signal to Y2 which then increases the blower speed back to the selected speed. See pages 42 – 43 for blower speed selection options.

Refer to page 32 for additional Balanced Climate requirements and limitations.

Dehumidification Feature (Optional)

The D terminal is the 24VAC input for dehumidification operation on dehumidification hot gas reheat equipped units. When 24VAC is applied to the D terminal, a 3-way valve solenoid is energized. The reheat coil located behind the evaporator coil is then active to reheat the supply air during cooling mode. This allows humidity to be removed from the air entering the unit without a large amount of sensible cooling capacity. During dehumidification, the indoor blower speed is

reduced to help with the humidity removal. A humidity sensing thermostat or humidistat is required to control dehumidification operation.

If there is a call for dehumidification and comfort cooling at the same time, the call for cooling takes precedence over dehumidification.

Ventilation Features (Optional)

See ventilation instructions provided with unit for low voltage wiring.

Low Ambient Control (LAC)

The low ambient control is a pressure switch that is attached to the liquid line of the system and monitors high side system pressure. Operation of the LAC occurs as outdoor temperatures drop below 60ºF. LAC operation cycles the condenser fan on/off based on outdoor temperature.

Outdoor Temperature Switch and Freeze Protection Thermostat

An outdoor temperature switch and an evaporator freeze protection thermostat is supplied with all units that have a low ambient control. The outdoor switch disables Balanced Climate mode (if enabled) when the temperature drops below 50ºF. This prevents potential evaporator coil freeze up issues. For units with mechanical dehumidification, this switch must remain disconnected when Balanced Climate mode is not being used. Refer to unit wiring diagram. The freeze thermostat cuts out compressor operation if the evaporator begins to freeze up.

Alarm Relay Feature (Controls Option)

The alarm relay provides a set of NO (normally open) and NC (normally closed) pilot duty contacts that operate when the defrost board locks out compressor operation because of a high or low system refrigerant pressure event.

Dirty Filter Switch Indicator (DFS)

The switch is adjustable and measures pressure drop across the unit filter surface. When pressure drop is higher than the switch setting, NO contacts are provided to indicate the filter needs to be serviced. Refer to page 38 for instructions on making switch adjustments.

TABLE 3
Field-Supplied Controls – Sequence of Operation

	Standard Units	Units w/ Economizers
Fan Only	Energize G	Energize G
1st Stage Cooling Mode/ Balanced Climate	Energize Y1, G	Energize Y1, G
2nd Stage Cooling Mode	Energize Y2 to override Balanced Climate mode when Y1-Y2 jumper is removed	Energize Y1, Y2, G
1st Stage Heating	Energize B/W1, Y1	Energize B/W1, Y1
2nd Stage Heating (if employed)	Energize B/W1, W2, Y1	Energize B/W1, W2, Y1
Ventilation	Energize A	Energize A
Dehumidification (if employed)	Energize D	Energize D
Emergency Heat	Energize, G, W2, W3	Energize, G, W2, W3

TABLE 4
Wall Thermostats

Part Number	Predominate Features
8403-060 (1120-445)	3 Stage Cool, 3 Stage Heat; Electronic Programmable/Non-Programmable; HP or Conventional; Auto or Manual Changeover; Dehumidification Output
8403-095	1 Stage Cool, 2 Stage Heat – Heat Pump; 1 Stage Cool, 1 Stage Heat – Conventional; Programmable/Non-Programmable Electronic; Auto or Manual Changeover
8403-090	2 Stage Cool, 3 Stage Heat – Heat Pump; 2 Stage Cool, 2 Stage Heat – Conventional; Programmable/Non-Programmable Electronic; Auto or Manual Changeover
8403-091	1 Stage Cool, 1 Stage Heat; Non-Programmable; FEMA Use
8403-092	2 Stage Cool, 3 Stage Heat – Heat Pump; 2 Stage Cool, 2 Stage Heat – Conventional; Programmable/Non-Programmable Electronic; Auto or Manual Changeover; Wi-Fi

TABLE 5
Humidity Controls

Part Number	Predominate Features
8403-100* (H6062A1000)	Electronic humidistat DPST Humidity range 10-90% with adjustable stops
8403-047 (H200-10-21-10)	Electronic dehumidistat SPST, closes-on-rise Humidity range 10-90% with adjustable stops

* If using Honeywell HumidiPRO (H6062A1000) 8403-100 humidistat, it must be configured for dehumidification in the menu.

TABLE 6
CO_2 Controllers

Part Number	Predominate Features
8403-096	Normally Open SPST relay closes-on-rise 24V dual wave length sensor. Default setting 950ppm, adjustable to 0-2000ppm Default off setting 1000ppm, adjustable to 0-200 ppm can be calibrated

TABLE 7
Thermostat Wire Size

Transformer VA	FLA	Wire Gauge	Maximum Distance In Feet
55	2.3	18 gauge 16 gauge 14 gauge 12 gauge	60 100 160 250

FIGURE 20
Thermostat Connections

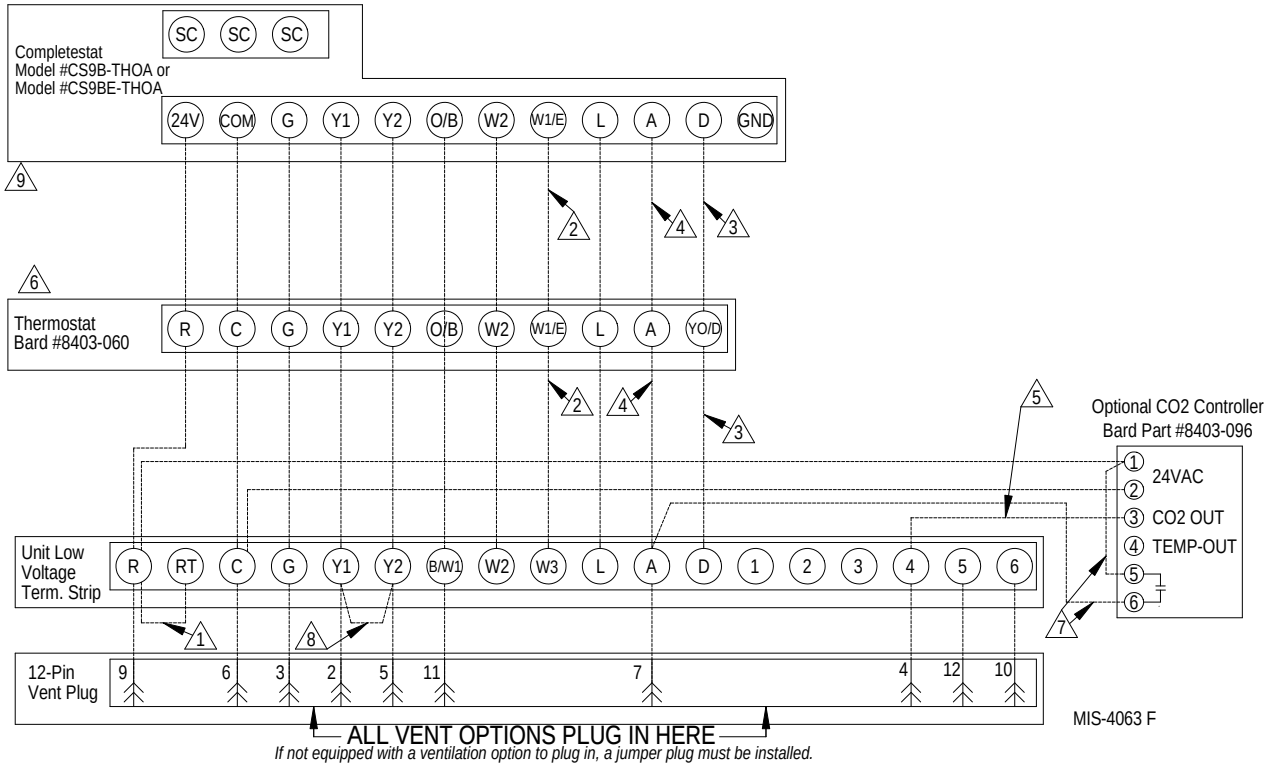

If not equipped with a ventilation option to plug in, a jumper plug must be installed.

1. Factory installed jumper. Remove jumper and connect to N.C fire alarm circuit if emergency shutdown required.
2. Wire not needed below 15KW.
3. Wire required for dehumidification models only.
4. Do not connect "A" from thermostat if optional CO2 controller is used
5. 0-10 VDC modulating C02 control signal for modulating ventilation control (optional for ECON only - see vent instruction manuals)
6. Ensure model configuration is heat pump and not heat/cool. Must be configured to programmable and fan set to be programmed fan for the "A" output to function during scheduled occupied periods. Must be configured for multi-stage for Y1 output to be active 1st stage cooling. For dehumidification, must be configured for "No Economizer" for YO/D to be active for humidity control.
7. Do not add these wires if setting up for modulating control.
8. Factory installed jumper. Remove jumper to activate Balanced Climate TM Mode. A 2-stage thermostat is recommended for balanced climate mode. Y1 Y2 jumper not present if economizer is factory installed. Units with economizers have balanced climate jumper in economizer, refer to economizer manual. The jumper is factory removed in the unit and on jade for C**HY models.
9. Completestat not compatible with C**HY models.

FIGURE 21
Thermostat Connections

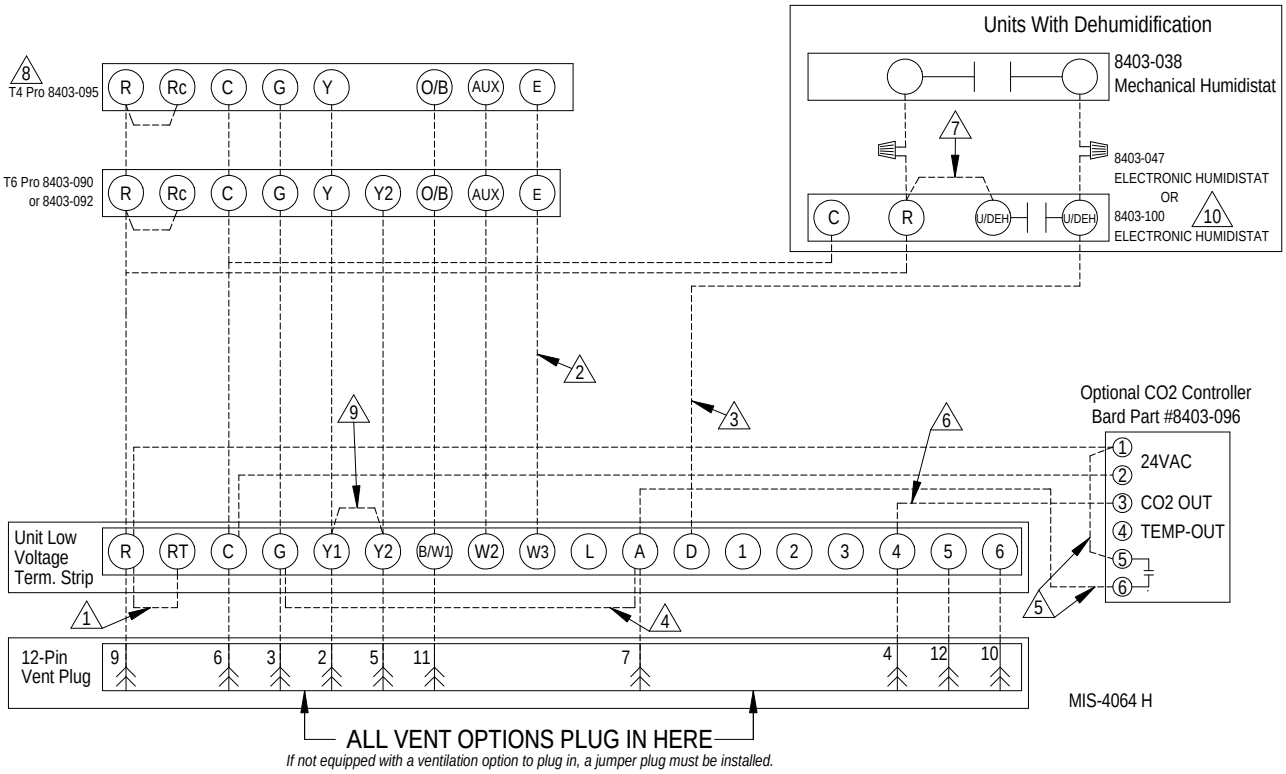

If not equipped with a ventilation option to plug in, a jumper plug must be installed.

1. FACTORY INSTALLED JUMPER. REMOVE JUMPER AND CONNECT TO N.C FIRE ALARM CIRCUIT IF EMERGENCY SHUTDOWN REQUIRED.
2. WIRE NOT NEEDED BELOW 15KW.
3. WIRE REQUIRED FOR DEHUMIDIFICATION MODELS ONLY.
4. FOR VENT OPERATION, ADD JUMPER IF OPTIONAL CO2 CONTROLLER IS NOT USED. VENT WILL RUN WHILE BLOWER IS ENERGIZED. FOR ECON & CRV-V, AN ADDITIONAL WIRE CHANGE IS REQUIRED. SEE INSTALL MANUAL
5. DO NOT ADD THESE WIRES IF SETTING UP FOR MODULATING CONTROL. SEE NOTE 6.
6. 0-10 VDC MODULATING CO2 CONTROL SIGNAL FOR MODULATING VENTILATION CONTROL (OPTIONAL FOR ECON ONLY) - SEE VENT INSTALLATION MANUAL.
7. JUMPER NEEDS ADDED.
8. THERMOSTAT WILL NOT WORK WITH UNITS EQUIPPED WITH ECONOMIZERS. T4 PRO NOT COMPATIBLE WITH C**HY MODELS
9. FACTORY INSTALLED JUMPER. REMOVE JUMPER TO ACTIVATE BALANCED CLIMATE™ MODE. A 2-STAGE THERMOSTAT IS RECOMMENDED FOR BALANCED CLIMATE MODE. Y1 Y2 JUMPER NOT PRESENT IF ECONOMIZER IS FACTORY INSTALLED. UNITS WITH ECONOMIZERS HAVE BALANCED CLIMATE JUMPER IN ECONOMIZER, REFER TO ECONOMIZER MANUAL. THE JUMPER IS FACTORY REMOVED IN THE UNIT AND ON JADE FOR C**HY MODELS
10. HUMIDISTAT 8403-100 WILL NEED TO BE CONFIGURED FOR DEHUMIDIFICATION IN THE MENU. SEE USER'S MANUAL

NOTICE

These units require R-410A refrigerant and polyol ester oil.

General

1. Use separate service equipment to avoid cross contamination of oil and refrigerants.
2. Use recovery equipment rated for R-410A refrigerant.
3. Use manifold gauges rated for R-410A (800 psi/250 psi low).
4. R-410A is a binary blend of HFC-32 and HFC-125.
5. R-410A is nearly azeotropic—similar to R-22 and R-12. Although nearly azeotropic, charge with liquid refrigerant.
6. R-410A operates at 40-70% higher pressure than R-22 and systems designed for R-22 cannot withstand this higher pressure.
7. R-410A has an ozone depletion potential of zero, but must be reclaimed due to its global warming potential.
8. R-410A compressors use polyol ester oil.
9. Polyol ester oil is hygroscopic; it will rapidly absorb moisture and strongly hold this moisture in the oil.
10. A liquid line dryer must be used—even a deep vacuum will not separate moisture from the oil.
11. Limit atmospheric exposure to 15 minutes.
12. If compressor removal is necessary, always plug compressor immediately after removal. Purge with small amount of nitrogen when inserting plugs.

Topping Off System Charge

If a leak has occurred in the system, Bard Manufacturing recommends reclaiming, evacuating (see criteria above) and charging to the nameplate charge. If done correctly, topping off the system charge can be done without problems.

With R-410A, there are no significant changes in the refrigerant composition during multiple leaks and recharges. R-410A refrigerant is close to being an azeotropic blend (it behaves like a pure compound or single component refrigerant). The remaining refrigerant charge, in the system, may be used after leaks have occurred and then "top-off" the charge by utilizing the pressure charts on the inner control panel cover as a guideline.

REMEMBER: *When adding R-410A refrigerant, it must come out of the charging cylinder/tank as a liquid to avoid any fractionation, and to ensure optimal system performance. Refer to instructions for the cylinder that is being utilized for proper method of liquid extraction.*

Safety Practices

1. Never mix R-410A with other refrigerants.
2. Use gloves and safety glasses. Polyol ester oils can be irritating to the skin, and liquid refrigerant will freeze the skin.
3. Never use air and R-410A to leak check; the mixture may become flammable.
4. Do not inhale R-410A—the vapor attacks the nervous system, creating dizziness, loss of coordination and slurred speech. Cardiac irregularities, unconsciousness and ultimate death can result from breathing this concentration.
5. Do not burn R-410A. This decomposition produces hazardous vapors. Evacuate the area if exposed.
6. Use only cylinders rated DOT4BA/4BW 400.
7. Never fill cylinders over 80% of total capacity.
8. Store cylinders in a cool area, out of direct sunlight.
9. Never heat cylinders above 125°F.
10. Never trap liquid R-410A in manifold sets, gauge lines or cylinders. R-410A expands significantly at warmer temperatures. Once a cylinder or line is full of liquid, any further rise in temperature will cause it to burst.

Important Installer Note

For improved start up performance, wash the indoor coil with a dishwashing detergent.

High Pressure Switch

All W**HY wall-mounted heat pump series models are supplied with a remote reset for the high and low pressure switch. If tripped, the pressure switch may be reset by turning the thermostat off then back on again. High pressure switch settings: Opens 650 +/– 15 PSI, Closes 520 +/– 15 PSI.

Three Phase Scroll Compresser Start Up Information

Scroll compressors, like several other types of compressors, will only compress in one rotational direction. Direction of rotation is not an issue with single phase compressors since they will always start and run in the proper direction.

However, three phase compressors will rotate in either direction depending upon phasing of the power. Since there is a 50-50 chance of connecting power in such a way as to cause rotation in the reverse direction, verification of proper rotation must be made. Verification of proper rotation direction is made by observing that suction pressure drops and discharge pressure rises when the compressor is energized. Reverse rotation also results in an elevated sound level over that with correct rotation, as well as substantially reduced current draw compared to tabulated values.

Verification of ***proper rotation*** must be made at the time the equipment is put into service. If improper rotation is corrected at this time, there will be no negative impact on the durability of the compressor. However, reverse operation for over 1 hour may have a negative impact on the bearing due to oil pump out.

NOTE: *If compressor is allowed to run in reverse rotation for an extended period of time, the compressor's internal protector will trip.*

All three phase compressors are wired identically internally. As a result, once the correct phasing is determined for a specific system or installation, connecting properly phased power leads to the same Fusite terminal should maintain proper rotation direction.

The direction of rotation of the compressor may be changed by reversing any two line connections to the unit.

Phase Monitor

All units with three phase scroll compressors are equipped with a three phase line monitor to prevent compressor damage due to phase reversal.

The phase monitor in this unit is equipped with two LEDs. If the Y signal (call for cooling) is present at the phase monitor and phases are correct, the green LED will light.

NOTE: *The phase monitor will not show phase reversal until the compressor is energized during a call for cooling or heat pump operation.*

If phases are reversed, the red fault LED will be lit and compressor operation is inhibited.

If a fault condition occurs, reverse two of the supply leads to the unit. ***Do not reverse any of the unit factory wires as damage may occur.***

Condenser Fan Operation

NOTE: *Certain models may be equipped with a low ambient control (LAC), and if so, the condenser fan motor will have a delayed start until system refrigerant operating pressure builds up. After starting, the fan motor may or may not cycle depending upon ambient conditions. This is normal operation.*

Service Hints

1. Caution owner/operator to maintain clean air filters at all times and also not to needlessly close off supply and return air registers. This reduces airflow through the system, which shortens equipment service life as well as increasing operating costs.
2. Check all power fuses or circuit breakers to be sure they are the correct rating.
3. Periodic cleaning of the outdoor coil to permit full and unrestricted airflow circulation is essential.

Sequence of Operation

Cooling

Circuit R-Y1 makes at thermostat pulling in compressor contactor, starting the compressor and outdoor motor. (See ***NOTE*** under **Condenser Fan Operation** concerning models equipped with low ambient control.) The G (indoor motor) circuit is automatically completed by the thermostat on any call for cooling operation or can be energized by manual fan switch on subbase for constant air circulation. On a call for 2nd stage heating, circuit R-W2 makes at the thermostat pulling in heat contactor for the strip heat and blower operation. On a call for third stage heat, R-W3 makes bringing on second heat contactor, if so equipped.

Heating

A 24V solenoid coil on reversing valve controls heating cycle operation. Two thermostat options, one allowing "Auto" changeover from cycle to cycle and the other constantly energizing solenoid coil during heating season—thus eliminating pressure equalization noise except during defrost, are to be used.

On "Auto" option, a circuit is completed from R-B/W1 and R-Y1 on each heating "on" cycle, energizing reversing valve solenoid and pulling in compressor contactor, starting compressor and outdoor motor. R-G also make starting indoor blower motor. Heat pump heating cycle now in operation.

The second option has no "Auto" changeover position, but instead energizes the reversing valve solenoid constantly whenever the system switch on subbase is placed in "Heat" position, the "B" terminal being constantly energized from R. A thermostat demand for heat completes R-Y1 circuit, pulling in compressor contactor starting compressor and outdoor motor. R-G also make starting indoor blower motor.

On a call for 2nd stage heating, circuit R-W2 makes at the thermostat pulling in the heat contactor for the strip heat and blower operation. On a call for third stage heat, R-B/W1 breaks, dropping out heat pump, and R-W3 makes, bringing on second heat contactor, if so equipped.

Balanced Climate™ Mode

Balanced Climate™ is a great comfort feature that can easily be applied under any normal circumstances. If the Bard air conditioning system is being set up in a typical environment where 72°F is the lowest cooling setpoint, remove the Y1/Y2 jumper and install a 2-stage cooling thermostat. This will increase the humidity removal up to 35% and provide a much more comfortable environment. This mode will also increase the supply temperature when in heating mode. When Balanced Climate mode is activated, it is employed in both heating and cooling modes.

NOTE: *Units with mechanical dehumidification require an additional connection to be made when enabling Balanced Climate. Refer to dehumidification supplemental instructions for this step.*

If the application is likely to require air conditioning operation below 60°F outdoor conditions, a low ambient control (LAC) kit must be installed. The LAC kit is equipped with an outdoor temperature switch that disables Balanced Climate mode when the outdoor temperature drops below 50°F. This prevents potential evaporator coil freeze up issues. The LAC kit also comes with an evaporator freeze protection thermostat that cuts out the compressor if the evaporator begins to freeze up.

If the unit is being installed with any ventilation package, a Bard LAC kit must be installed. Failure to utilize an LAC with any heat pump can cause coil freeze up.

Balanced Climate can readily be applied to duct-free (supply and return air grille) applications. It may also be applied to ducted applications with **limited static of 0.20" ESP (total including both supply and return statics)**. Consult Bard Application Engineering for details prior to implementation.

CAUTION: *Balanced Climate is not a replacement for a dehumidification (hot gas reheat) unit for extreme applications, but rather an enhancement feature for limited climates and applications.*

Defrost Cycle

The defrost cycle is controlled by temperature and time on the solid state heat pump control.

When the outdoor temperature is in the lower 40°F temperature range or colder, the outdoor coil temperature is 32°F or below. This coil temperature is sensed by the coil temperature sensor mounted near the bottom of the outdoor coil. Once coil temperature reaches 30°F or below, the coil temperature sensor sends a signal to the control logic of the heat pump control and the defrost timer will start accumulating run time.

After 30, 60 or 90 minutes of heat pump operation at 30°F or below, the heat pump control will place the system in the defrost mode.

During the defrost mode, the refrigerant cycle switches back to the cooling cycle, the outdoor motor stops, electric heaters are energized and hot gas passing through the outdoor coil melts any accumulated frost. When the temperature rises to approximately 57°F, the coil temperature sensor will send a signal to the heat pump control which will return the system to heating operations automatically.

If some abnormal or temporary condition such as a high wind causes the heat pump to have a prolonged defrost cycle, the heat pump control will restore the system to heating operation automatically after 8 minutes.

The heat pump defrost control board has an option of 30-, 60- or 90-minute setting. By default, this unit is shipped from the factory with the defrost time on the 60-minute pin. If circumstances require a change to another time, remove the jumper pin from the 60-minute terminal and reconnect to the desired terminal. Refer to Figure 22.

There is a cycle speed up jumper on the control. This can be used for testing purposes to reduce the time between defrost cycle operation without waiting for time to elapse.

Use a small screwdriver or other metallic object, or another 1/4" QC, to short between the *SPEEDUP* terminals to accelerate the HPC timer and initiate defrost.

Be careful not to touch any other terminals with the instrument used to short the *SPEEDUP* terminals. It may take up to 10 seconds with the *SPEEDUP* terminals shorted for the speedup to be completed and the defrost cycle to start.

As soon as the defrost cycle kicks in, remove the shorting instrument from the SPEEDUP terminals. Otherwise the timing will remain accelerated and run through the 1-minute minimum defrost length sequence in a matter of seconds and will automatically terminate the defrost sequence.

There is an initiate defrost jumper (sen jump) on the control that can be used at any outdoor ambient during the heating cycle to simulate a 0°F coil temperature.

This can be used to check defrost operation of the unit without waiting for the outdoor ambient to fall into the defrost region.

By placing a jumper across the *SEN JMP* terminals (a 1/4" QC terminal works best) the defrost sensor mounted on the outdoor coil is shunted out and will activate the timing circuit. This permits the defrost cycle to be checked out in warmer weather conditions without the outdoor temperature having to fall into the defrost region.

In order to terminate the defrost test, the *SEN JMP* jumper must be removed. If left in place too long, the compressor could stop due to the high pressure control opening because of high pressure condition created by operating in the cooling mode with outdoor fan off. Pressure will rise fairly fast as there is likely no actual frost on the outdoor coil in this artificial test condition.

There is also a 5-minute compressor time delay function built into the HPC. This is to protect the compressor from short cycling conditions. The board's LED will have a fast blink rate when in the compressor time delay. In some instances, it is helpful to the service technician to override or speed up this timing period and shorting out the *SPEEDUP* terminals for a few seconds can do this.

Low Pressure Switch Bypass Operation

The control has a selectable (SW1) low pressure switch bypass set up to ignore the low pressure switch input during the first (30, 60, 120 or 180 seconds) of "Y" operation.

After this period expires, the control will then monitor the low pressure switch input normally to make sure that the switch is closed during "Y" operation.

FIGURE 22
Defrost Control Board

SW 1	SW 2	TIME (SEC)
OFF	OFF	30
ON	OFF	60
OFF	ON	120*
ON	ON	180

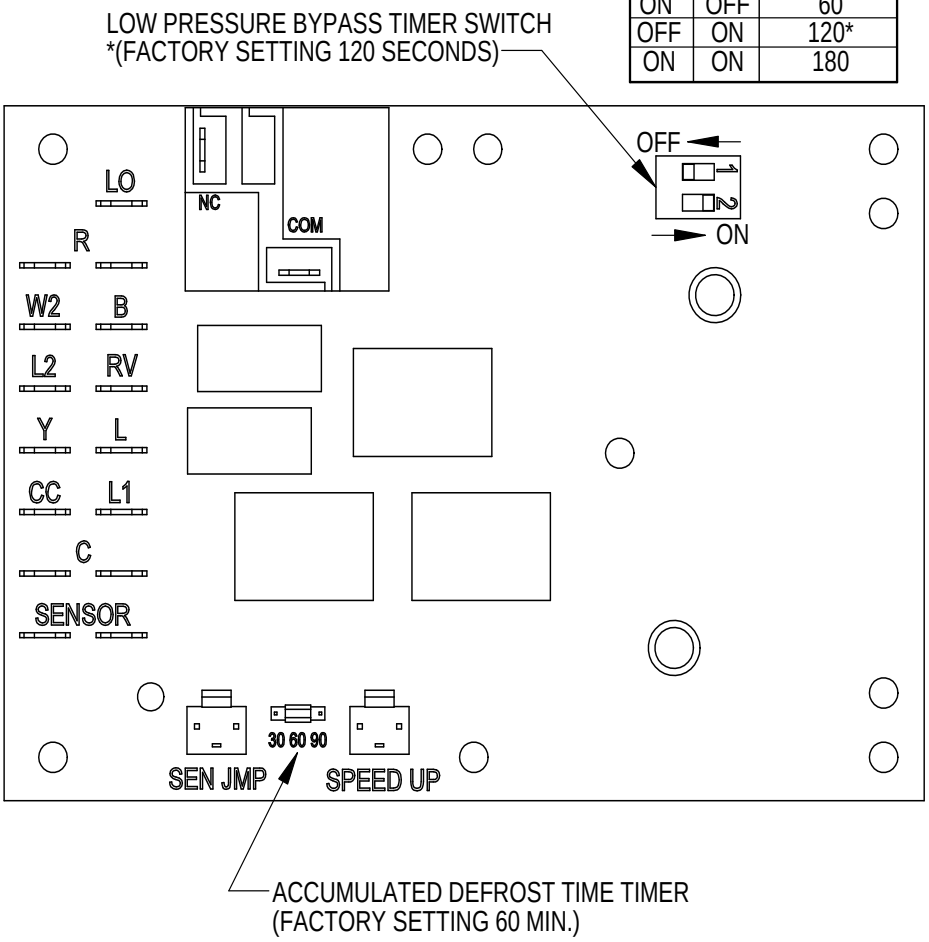

Model	Setting
W42HY	60
W48HY	60
W60HY	60

MIS-2668 A

High Pressure Switch Operation

The control has a built-in lockout system that allows the unit to have the high pressure switch trip up to two times in 1 hour and only encounter a “soft” lockout. A “soft” lockout shuts the compressor off and waits for the pressure switch to reset, which at that point then allows the compressor to be restarted as long as the 5-minute short cycle timer has run out. If the high pressure switch trips a third time within 1 hour, the unit is in “hard” lockout indicating something is certainly wrong and it will not restart itself.

Vent Connection Plug

All units are equipped with a vent connection plug in the side of the control panel for the different ventilation packages to plug in to. If the compressor will not start and there is no "Y1" at the defrost board, first check to make sure that either the optional vent is plugged into the vent connection plug or the supplied jumper plug is in place. **The unit will not operate without anything plugged in.** This plug is located on the side of the control panel behind the front vent door (behind the filter access door). If the unit is supplied with a factory-installed vent package, it will be plugged in but the jumper plug will also be tethered next to the connection for troubleshooting purposes, if necessary.

Pressure Service Ports

High and low pressure service ports are installed on all units so that the system operating pressures can be observed. Pressure tables covering all models can be found on page 40. It is imperative to match the correct pressure table to the unit by model number.

This unit employs high-flow Coremax valves instead of the typical Schrader type valves.

WARNING! Do NOT use a Schrader valve core removal tool with these valves. Use of such a tool could result in eye injuries or refrigerant burns!

To change a Coremax valve without first removing the refrigerant, a special tool is required which can be obtained at www.fastestinc.com/en/SCCA07H. See the replacement parts manual for replacement core part numbers.

Solid State Heat Pump Control Troubleshooting Procedure

1. ***NOTE:*** *A thorough understanding of the defrost cycle sequence is essential. Review that section (page 32) prior to troubleshooting the control.* Turn on AC power supply to unit.
2. Turn thermostat blower switch to "fan on"— the indoor blower should start. (If it doesn't, troubleshoot indoor unit and correct problem.)
3. Turn thermostat blower to "auto" position. Indoor blower should stop. ***NOTE:*** *Many models have a 1-minute blower time delay on "off" command; wait for this to time out.*
4. Set system switch to "heat" or "cool". Adjust thermostat to call for heat or cool. The indoor blower, compressor and outdoor fan should start.

NOTE: *If there was no power to 24 volt transformer, the compressor and outdoor fan motor will not start for 5 minutes. This is because of the compressor short cycle protection.*

LED BLINK CODES	
BLINK	**FUNCTION**
Slow	Normal function (1.0 sec on/1.0 sec off)
Fast	Compressor Delay timer active (0.1 sec on/0.1 sec off)
1	Low pressure switch failure
2	High pressure switch failure/"Soft" Lockout
3	Defrost mode active
4	High pressure switch failure/"Hard" Lockout

TABLE 8 – Troubleshooting

Sympton	Description, Check and Possible Causes	What & How to Check / Repair
Compressor will not start (heating or cooling)	**1. Check for LED illumination.** Is there an LED illuminated on the board (flashing)?	Yes = go to Step #2; No = go to Step #3
	2. Check for error codes. Is the LED flashing a Code?	Yes = go to Step #4; No = go to Step #8
	3. Check for power at board. Is there 24 volts AC between R and C?	Yes = go to Step #13; No = go to Step #9
	4. Check codes. What code is blinking?	Code "1", go to Step #6; Code "2", go to Step#7; Fast Blink, go to Step #5
	5. Compressor delay active. Wait for 5 minute delay or jump board's "speed up pins".	Check for proper operation; if still needed, go back to Step #1.
	6. Low pressure fault.	Check wiring circuit and unit pressures.
	7. High pressure fault.	Check wiring circuit and unit pressures.
	8. Check for Compressor input signal. Is there 24 volts AC between Y and C?	Yes = go to Step #10; No = go to Step #11
	9. No power to board.	The unit either does not have unit voltage, the transformer is bad or the unit wiring is incorrect.
	10. Check for Compressor output signal. Is there 24 volts AC between CC & C?	Yes = go to Step #12; No = go to Step #13
	11. No "Y" compressor input signal.	Check thermostat wiring, incorrect phase of unit (see section on Phase Monitor), and finally unit wiring.
	12. No "CC" compressor output signal.	Check compressor contactor for proper operation and finally check compressor.
	13. Faulty board.	Replace defrost board.
Fan outdoor motor does not run (cooling or heating except during defrost)	Heat pump control defective	Check across fan relay on heat pump control. (Com-NC) Replace heat pump control.
	Motor defective	Check for open or shorted motor winding. Replace motor.
	Motor capacitor defective	Check capacitor rating. Check for open or shorted capacitor. Replace capacitor.
Reversing valve does not energize (heating only)	Heat pump control defective	Check for 24V between RV-C and B-C. 1. Check control circuit wiring. 2. Replace heat pump control.
	Reversing valve solenoid coil defective	Check for open or shorted coil. Replace solenoid coil.
Unit will not go into defrost (heating only)	Temperature sensor or heat pump control defective	Disconnect temperature sensor from board and jumper across "SPEEDUP" terminals and "SEN JMP" terminals. This should cause the unit to go through a defrost cycle within one minute. 1. If unit goes through defrost cycle, replace temperature sensor. 2. If unit does not go through defrost cycle, replace heat pump control.
Unit will not come out of defrost (heating only)	Temperature sensor or heat pump control defective	Jumper across "SPEEDUP" terminal. This should cause the unit to come out of defrost within one minute. 1. If unit comes out of defrost cycle, replace temperature sensor. 2. If unit does not come out of defrost cycle, replace heat pump control.

Checking Temperature Sensor Outside Unit Circuit

1. Disconnect temperature sensor from board and from outdoor coil.
2. Use an ohmmeter to measure the resistance of the sensor. Also use ohmmeter to check for short or open.
3. Check resistance reading to chart of resistance. Use sensor ambient temperature. (Tolerance of part is ± 10%.)
4. If sensor resistance reads very low, sensor is shorted and will not allow proper operation of the heat pump control.
5. If sensor is out of tolerance, shorted, open or reads very low ohms, it should be replaced.

TABLE 9
Temperature F vs. Resistance R of Temperature Sensor

F	R	F	R	F	R	F	R
-25.0	196871	13.0	56985	53.0	19374	89.0	7507
-24.0	190099	14.0	55284	52.0	18867	90.0	7334
-23.0	183585	15.0	53640	53.0	18375	91.0	7165
-22.0	177318	16.0	52051	54.0	17989	92.0	7000
-21.0	171289	17.0	50514	55.0	17434	93.0	6840
-20.0	165487	18.0	49028	56.0	16984	94.0	6683
-19.0	159904	19.0	47590	57.0	16547	95.0	6531
-18.0	154529	20.0	46200	58.0	16122	96.0	6383
-17.0	149355	21.0	44855	59.0	15710	97.0	6239
-16.0	144374	22.0	43554	60.0	15310	98.0	6098
-15.0	139576	23.0	42295	61.0	14921	99.0	5961
-14.0	134956	24.0	41077	62.0	14544	100.0	5827
-13.0	130506	25.0	39898	63.0	14177	101.0	5697
-12.0	126219	26.0	38757	64.0	13820	102.0	5570
-11.0	122089	27.0	37652	65.0	13474	103.0	5446
-10.0	118108	28.0	36583	66.0	13137	104.0	5326
-9.0	114272	29.0	35548	67.0	12810	105.0	5208
-8.0	110575	30.0	34545	68.0	12492	106.0	5094
-7.0	107010	31.0	33574	69.0	12183	107.0	4982
-6.0	103574	32.0	32634	70.0	11883	108.0	4873
-5.0	100260	33.0	31723	71.0	11591	109.0	4767
-4.0	97064	34.0	30840	72.0	11307	110.0	4663
-3.0	93981	35.0	29986	73.0	11031	111.0	4562
-2.0	91008	36.0	29157	74.0	10762	112.0	4464
-1.0	88139	37.0	28355	75.0	10501	113.0	4367
0.0	85371	38.0	27577	76.0	10247	114.0	4274
1.0	82699	39.0	26823	77.0	10000	115.0	4182
2.0	80121	40.0	26092	78.0	9760	116.0	4093
3.0	77632	41.0	25383	79.0	9526	117.0	4006
4.0	75230	42.0	24696	80.0	9299	118.0	3921
5.0	72910	43.0	24030	81.0	9077	119.0	3838
6.0	70670	44.0	23384	82.0	8862	120.0	3757
7.0	68507	45.0	22758	83.0	8653	121.0	3678
8.0	66418	46.0	22150	84.0	8449	122.0	3601
9.0	64399	47.0	21561	85.0	8250	123.0	3526
10.0	62449	48.0	20989	86.0	8057	124.0	3452
11.0	60565	49.0	20435	87.0	7869		
12.0	58745	50.0	19896	88.0	7686		

Troubleshooting Nidec SelecTech Series ECM Motors

If the Motor Is Running

1. It is normal for the motor to rock back and forth on start up. Do not replace the motor if this is the only problem identified.
2. If the system is excessively noisy, does not appear to change speeds in response to a demand (Heat, Cool, Other) or is having symptoms during the cycle such as tripping limit or freezing coil, check the following:
   A. Wait for programmed delays to time out.
   B. Ensure that the motors control inputs are wired as shown in the factory-supplied wiring diagram to ensure motor is getting proper control signals and sequencing.
   C. Remove the filter and check that all dampers, registers and grilles are open and free flowing. If removing the filters corrects the problem, clean or replace with a less restrictive filter. Also check and clean the blower wheel or coil as necessary.
   D. Check the external static pressure (total of both supply and return) to ensure it is within the range as listed on the unit serial plate. If higher than allowed, additional duct work is needed.
   E. If the motor does not shut off at the end of the cycle, wait for any programmed delays to time out (no more than 90 seconds). Also make sure that there is no call for "Continuous Fan" on the "G" terminal.
   F. If the above diagnostics do not solve the problem, confirm the voltage checks in the next section below, then continue with the "Model SelecTech Communication Diagnostics".

If the Motor Is Not Running

1. Check for proper high voltage and ground at the (L/L1) (G) (N/L2) connections at the motor (see Figure 23). Correct any voltage issues before proceeding to the next step. The SelecTech motor is voltage specific. Only the correct voltage should be applied to the proper motor. Input voltage within plus or minus 10% of the nominal line power VAC is acceptable.
2. If the motor has proper high voltage and ground at the (L/L1) (G) (N/L2) connections, then continue to "Model SelecTech Communication Diagnostics".

FIGURE 23
Motor Connections

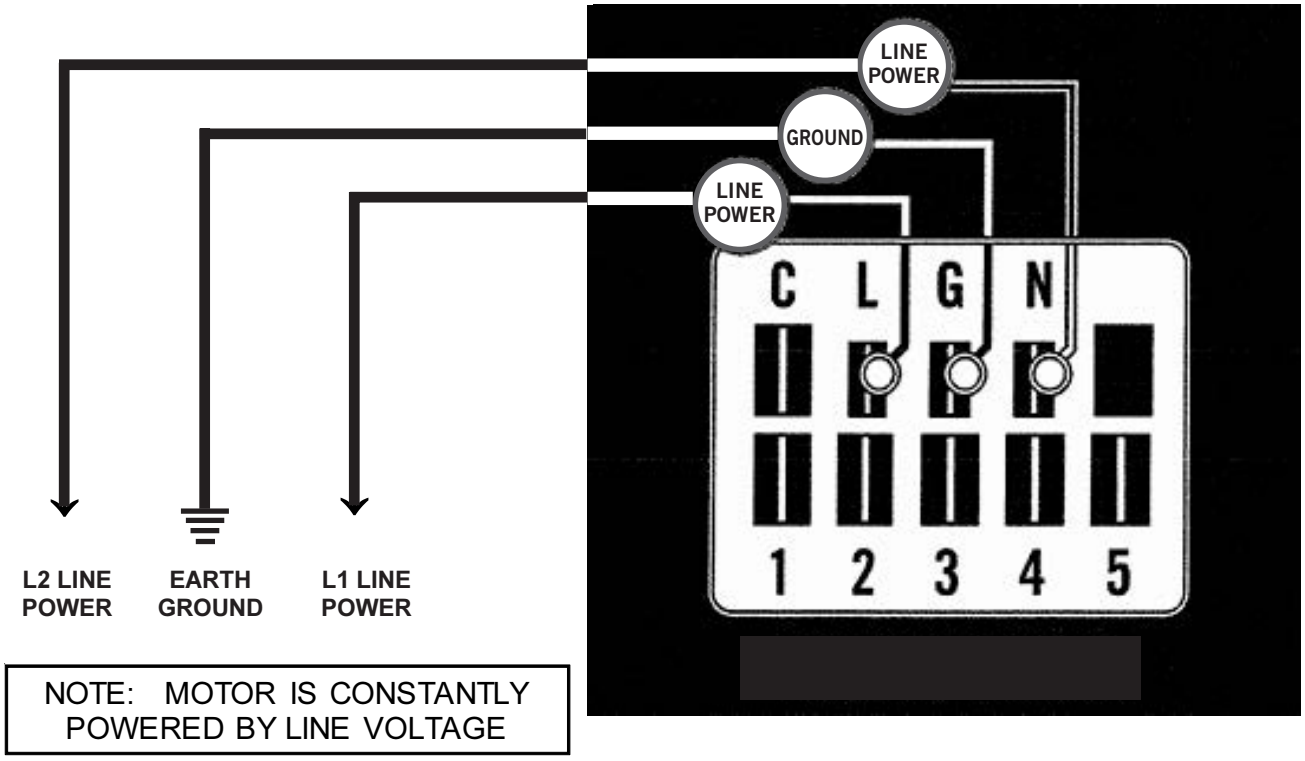

Model SelecTech Communication Diagnostics

The SelecTech motor is communicated through 24VAC low voltage (thermostat control circuit wiring).

1. Start with unit wiring diagram to confirm proper connections and voltage (see Figure 24).
2. Initiate a demand from the thermostat and check the voltage between the common and the appropriate motor terminal (1-5). ("G" input is typically on terminal #1, but always refer to wiring diagram.)
   A. If the low voltage communication is not present, check the demand from the thermostat. Also check the output terminal and wire(s) from the terminal strip or control relay(s) to the motor.
   B. If the motor has proper high voltage as identified above (**If the Motor Is Not Running** Step 1 on page 37), proper low voltage to a programmed terminal and is not operating, the motor has failed and will require replacement.

FIGURE 24
Motor Connections

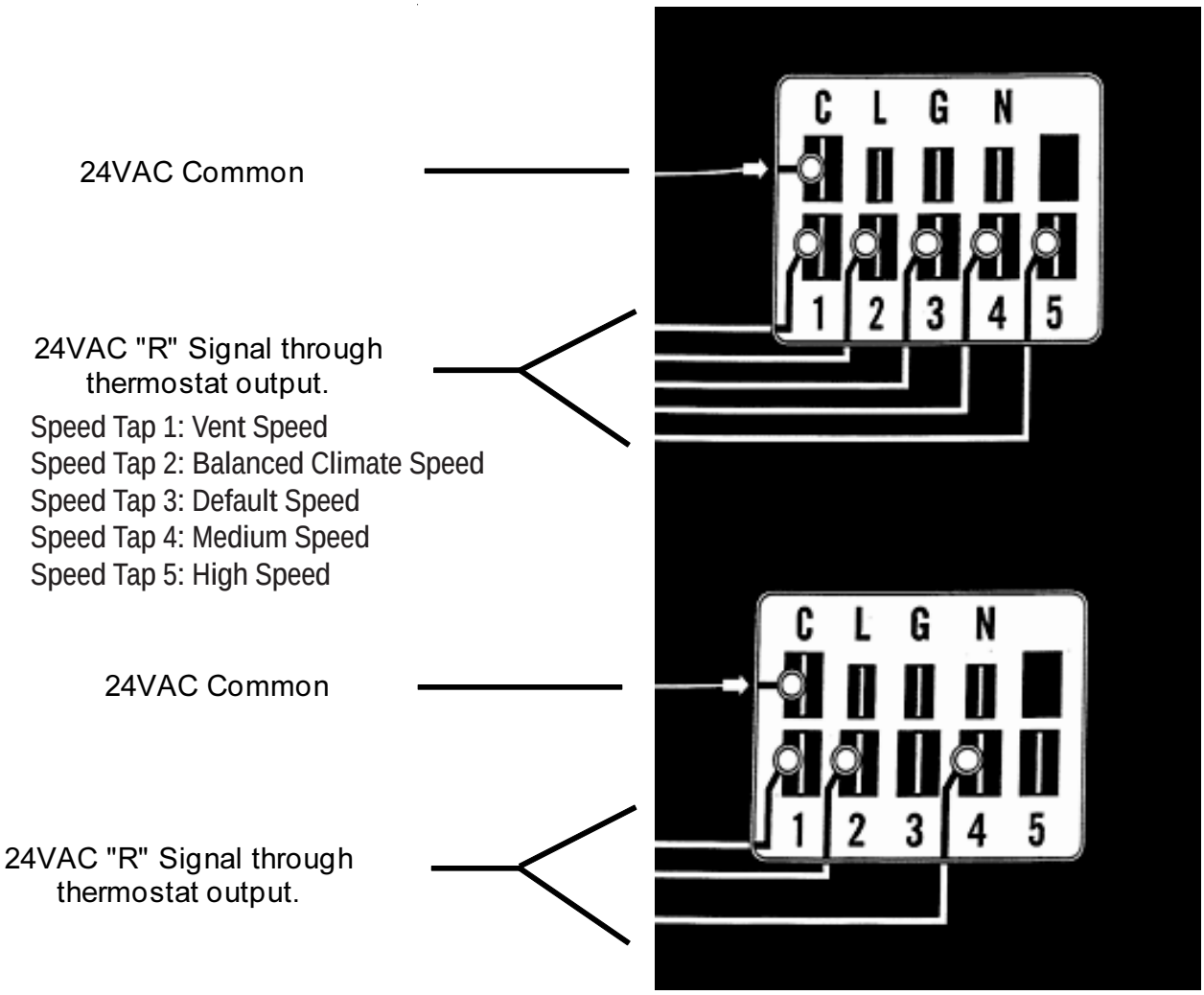

Fan Blade Setting Dimensions

Shown in Figure 25 is the correct fan blade setting for proper air delivery across the outdoor coil. Refer to Table 10 for unit specific dimension.

Any service work requiring removal or adjustment in the fan and/or motor area will require that the dimensions below be checked and blade adjusted in or out on the motor shaft accordingly.

FIGURE 25
Fan Blade Setting

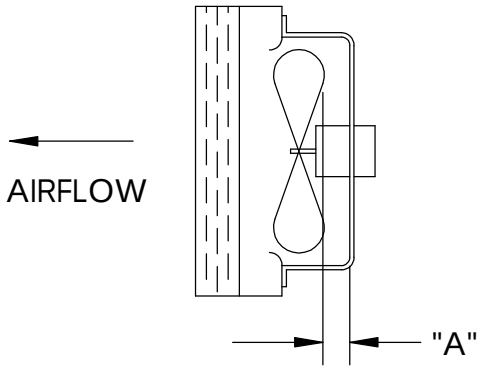

MIS-1724

TABLE 10
Fan Blade Dimensions

Model	Dimension A
W42HY W48HY W60HY	1.5"

R-410A Refrigerant Charge

This unit was charged at the factory with the quantity of refrigerant listed on the serial plate. AHRI capacity and efficiency ratings were determined by testing with this refrigerant charge quantity.

The pressure tables on pages 40 show nominal pressures for the units. Since many installation specific situations can affect the pressure readings, this information should only be used by certified technicians as a guide for evaluating proper system performance. They shall not be used to adjust charge. If charge is in doubt, reclaim, evacuate and recharge the unit to the serial plate charge.

Removal of Fan Shroud

1. Disconnect all power to the unit before servicing.
2. To access the condenser coil for cleaning or to service the outdoor fan, first remove the side grilles.
3. The fan shroud sides can then be removed for ease of access to the coil and the back side of the shroud by removing the seven (7) screws as shown in Figure 26.
4. The fan or coil can now be serviced.
5. Reverse the steps to reassemble.

FIGURE 26
Fan Shroud Removal

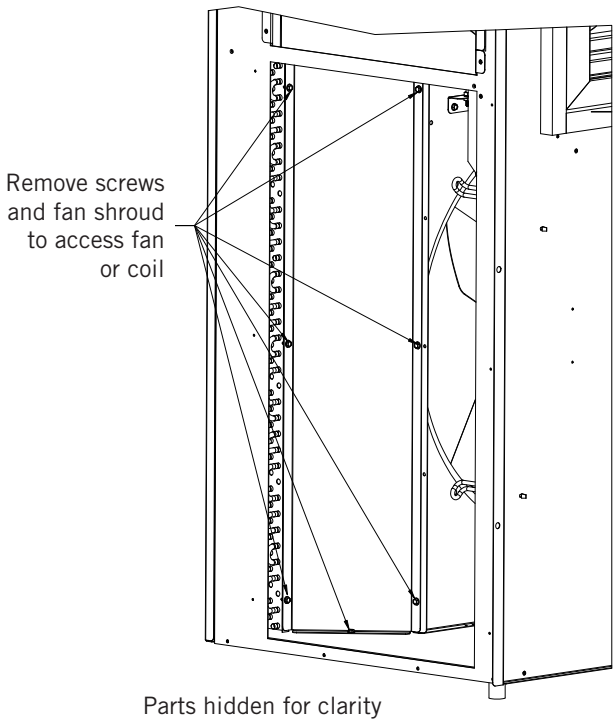

MIS-4045

TABLE 11A
Cooling Pressure – Standard Airflow

Air Temperature Entering Outdoor Coil °F

Model	Return Air Temp (DB/WB)	Pressure	75	80	85	90	95	100	105	110	115	120	125
W42HY	75/62	Low Side	122	125	128	130	133	135	137	139	141	143	144
		High Side	318	339	361	385	410	436	463	492	521	552	583
	80/67	Low Side	131	134	137	139	142	144	147	149	151	153	154
		High Side	326	348	371	395	421	447	475	504	534	566	598
	85/72	Low Side	136	139	142	144	147	150	152	154	156	158	160
		High Side	337	360	384	409	435	463	492	522	553	585	619
W48HY	75/62	Low Side	130	132	134	135	137	139	141	142	144	146	148
		High Side	322	344	367	391	416	442	468	496	525	554	585
	80/67	Low Side	139	141	143	145	147	149	150	152	154	156	158
		High Side	330	353	376	401	426	453	480	509	538	569	600
	85/72	Low Side	144	146	148	150	152	154	156	158	160	162	163
		High Side	341	365	389	415	441	469	497	527	557	588	621
W60HY	75/62	Low Side	123	125	127	129	131	133	135	137	139	140	142
		High Side	311	337	365	391	418	445	472	499	526	553	579
	80/67	Low Side	131	134	136	138	140	142	144	146	148	150	152
		High Side	319	346	374	401	429	457	484	512	539	567	594
	85/72	Low Side	136	139	141	143	145	147	150	151	153	155	157
		High Side	330	358	387	415	444	473	501	530	558	587	615

Low side pressure ± 4 PSIG
High side pressure ± 10 PSIG

Tables are based upon rated CFM (airflow) across the evaporator coil. If there is any doubt as to correct operating charge being in the system, the charge should be removed and system evacuated and recharged to serial plate charge weight.

NOTE: *Pressure table based on high speed condenser fan operation. If condensing pressures appear elevated check condenser fan wiring. See* **Condenser Fan Operation** *on page 31.*

TABLE 11B
Heating Pressure – Standard Airflow

Air Temperature Entering Outdoor Coil °F

Model	Indoor	Heating	0	5	10	15	20	25	30	35	40	45	50	55	60	65
W42HY	70	Low Side	39	44	50	56	62	68	75	82	89	97	105	113	122	131
		High Side	283	287	292	297	304	310	318	326	335	345	355	367	378	391
W48HY	70	Low Side	36	41	46	52	58	64	71	79	86	94	103	111	121	130
		High Side	263	271	279	287	296	304	314	323	333	343	353	364	375	386
W60HY	70	Low Side	32	38	45	51	58	65	72	79	87	94	102	110	118	126
		High Side	297	303	310	317	324	332	339	348	356	365	374	383	393	403

TABLE 12
Electrical Specifications – W**HY Series

Model	Rated Volts & Phase	No. Field Power Circuits	Single Circuit		Multiple Circuit			
			① Minimum Circuit Ampacity	② Maximum External Fuse or Circuit Breaker	① Minimum Circuit Ampacity		② Maximum External Fuse or Circuit Breaker	
					Ckt. A	Ckt. B	Ckt. A	Ckt. B
W42HY-A0Z	230/208-1	1	32	40				
A05		1	58	60				
A10		1 or 2	84	90	32	52	40	60
④ A15		1 or 2	85	90	33	52	40	60
W42HY-B0Z	230/208-3	1	25	30				
B05		1	40	40				
B09		1	52	60				
③ B15		1	52	60				
W42HY-C0Z	460-3	1	12	15				
C05		1	19	20				
C09		1	25	25				
③ C15		1	26	30				
W48HY-A0Z	230/208-1	1	35	40				
A05		1 or 2	61	70	35	26	45	30
A10		1 or 2	87	90	35	52	45	60
④ A15		1 or 2	87	90	35	52	45	60
W48HY-B0Z	230/208-3	1	25	30				
B05		1	40	45				
B09		1	52	60				
③ B15		1	53	60				
W48HY-C0Z	460-3	1	12	15				
C05		1	20	20				
C09		1	26	30				
③ C15		1	26	30				
W60HY-A0Z	230/208-1	1	39	45				
A05		1 or 2	65	70	39	26	45	30
A10		1 or 2	91	100	39	52	45	60
④ A15		1 or 2	91	100	39	52	45	60
W60HY-B0Z	230/208-3	1	28	35				
B09		1	56	60				
③ B15		1	56	60				
W60HY-C0Z	460-3	1	14	20				
C09		1	28	30				
③ C15		1	28	30				

① These "Minimum Circuit Ampacity" values are to be used for sizing the field power conductors. Refer to the National Electrical code (latest version), Article 310 for power conductor sizing. **CAUTION**: When more than one field power circuit is run through one conduit, the conductors must be derated. Pay special attention to note 8 of Table 310 regarding Ampacity Adjustment Factors when more than three (3) current carrying conductors are in a raceway.

② Maximum size of the time delay fuse or circuit breaker for protection of field wiring conductors.

③ Maximum KW that can operate with the heat pump on is 9KW. Full heat available during emergency heat mode.

④ Maximum KW that can operate with the heat pump on is 10KW. Full heat available during emergency heat mode.

NOTE: *The Maximum Overcurrent Protection (MOCP) value listed is the maximum value as per UL 60335 calculations for MOCP (branch-circuit conductor sizes in this chart are based on this MOCP). The actual factory-installed overcurrent protective device (circuit breaker) in this model may be lower than the maximum UL 60335 allowable MOCP value, but still above the UL 60335 minimum calculated value or Minimum Circuit Ampacity (MCA) listed.*

IMPORTANT: *While this electrical data is presented as a guide, it is important to electrically connect properly sized fuses and conductor wires in accordance with the National Electrical Code and all local codes.*

Setting Unit Airflow

The unit is set from the factory at the default speed. Most units have three selectable cooling speed taps that can be utilized. The default speed is the lowest cooling speed. The two higher speed taps can be used for higher duct static applications so that the unit can maintain the recommended airflow as shown in Table 13. The higher speeds can also be used when higher sensible cooling is desired. To change to the higher speed taps, move the orange/black wire on the blower speed terminal block to either MED or HI. Refer to the graphs on pages 46 and 47 for the corresponding airflow of each tap. Set the unit duct static based on the highest airflow that the unit will run at.

TABLE 13
Recommended Airflow

Model	Nominal Rated CFM*	Nominal Rated ESP*	Recommended Airflow Range	Factory Speed Connection
W42HY	1350	.15	1250 - 1600	Default
W48HY	1550	.20	1450 - 1750	
W60HY	1750	.20	1650 - 2000	

* Rated CFM and ESP on factory speed connection.

NOTE: *Be sure to adjust the system static or blower speed to maintain airflows above the minimum recommendations to prevent freeze up conditions if Balanced Climate mode is activated.*

Do not operate the unit in Balanced Climate mode if running high static applications as indicated in the blower performance table. If Balanced Climate mode is activated as described on page 25, the unit will run in this mode at all times unless there is a call for ventilation, electric heat or 2nd stage cooling from a 2-stage thermostat. At that time, the unit will automatically activate a higher speed tap.

Blower Speeds

Five factory programmed speed taps (torque settings) are available for the motor, and are selected through different unit modes of operation. These modes are energized by 24VAC signals from the low voltage terminal block located inside the control panel by a thermostat or other controlling device. Each speed tap is programmed by Bard at the factory to different motor torque settings (see Figure 27).

FIGURE 27
Speed Taps

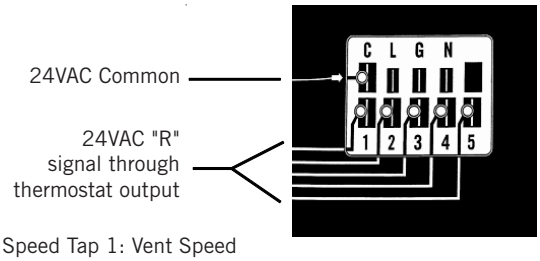

Speed Tap 1: Vent Speed
Speed Tap 2: Balanced Climate Speed
Speed Tap 3: Default Speed
Speed Tap 4: Medium Speed
Speed Tap 5: High Speed

Multiple motor speed taps may be energized simultaneously by 24VAC power during different modes of operation. The highest number speed tap energized takes priority with 5 being the highest and 1 being the lowest. See Table 14 for the corresponding blower speeds with the different modes of operation.

Programmed blower speed taps are as follows (see also Figure 28):

Speed Tap 1: **Vent/blower only** speed

Speed Tap 2: **Balanced Climate** speed

Speed Tap 3: **Default LO cooling & heating** speed. Energized by default for cooling operation through the blower speed tap selection and is labeled as LO.

Speed Tap 4: **Optional MED Cooling & heating** speed. Selected manually through the blower speed tap selection and is labeled as MED.

Speed Tap 5: **Optional HI cooling & heating** speed. Selected manually through the blower speed tap selection and is labeled as HI.

FIGURE 28
Speed Taps

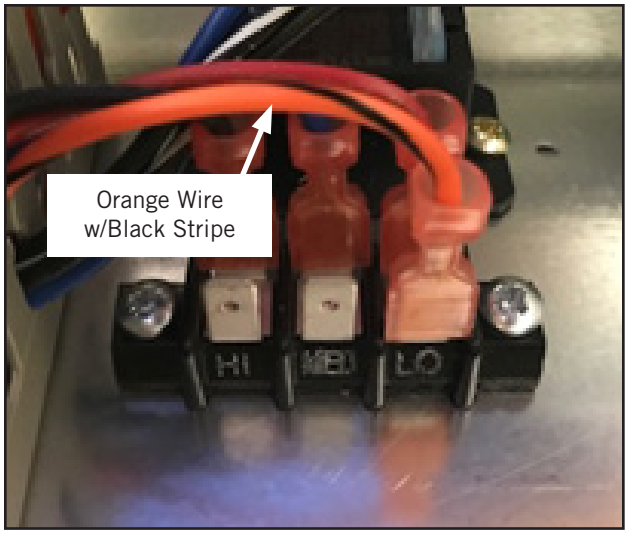

TABLE 14
Blower Speeds for Unit Operational Modes

Unit Operation	Thermostat Inputs – 24VAC							Speed Taps			Blower Speed	Compressor Operation
	G	Y1	Y2	B/W1	W2	W3	D	1	2	3-4-5[1]		
Blower Only	X							X			Vent/Blower Only	Off
Balanced Climate Cooling	X	X						X	X		Balanced Climate	On
Full Load Cool	X	X	X					X	X	X	Lo/Med/Hi	On
Balanced Climate Heat Pump Heating	X	X		X				X	X		Balanced Climate	On
Full Load Heat Pump Heating	X	X	X	X				X	X	X	Lo/Med/Hi	On
1st Stage Electric Heat					X					X	Lo/Med/Hi	Off
2nd Stage Electric Heat					X	X				X	Lo/Med/Hi	Off
Dehumidify[2]							X	X	X		Balanced Climate	On

1 Fan speed is selectable through the blower speed control terminal block. LO (default), MED or HI speeds can be used.
2 Dehumidification operation is disabled when a call for heating or cooling occurs. Unit runs at Balanced Climate speed during dehumidification operation.

Speed Tap 1 – Vent/Blower Only

Speed taps 1 and 3 are programmed to identical torque settings in the ECM motor. This means that if speed tap 1 is energized, the airflow amount will be the same as default airflow. Tap 1 is used when a vent is installed and ventilation is called for by energizing the A terminal of the low voltage terminal block with 24VAC. Speed tap 1 is the lowest priority; if any of the other speed taps are energized, they will override speed tap 1.

Speed Tap 2 – Balanced Climate

Speed tap 2 is programmed to a lower than rated speed in the ECM motor. In order for Balanced Climate speed to be used during compressor cooling mode, the jumper between Y1 and Y2 must be removed. This means that if speed tap 2 is energized, the airflow amount will be lower than default airflow. Tap 2 is used when Balanced Climate is called for by energizing the Y1 terminal of the low voltage terminal block with 24VAC. Speed tap 2 is overridden if taps 3, 4, or 5 are energized.

Speed Tap 3 – Default LO Cooling & Heating

Speed tap 3 is programmed for rated speed in the SelecTech motor. This means that if speed tap 3 is energized, the airflow amount will be the default airflow. Tap 3 is used by default when cooling is called for by energizing the Y1 terminal of the low voltage terminal block with 24VAC. The unit is shipped with the jumper between Y1 and Y2 installed and it must be removed to use Balanced Climate mode. The unit is shipped with the orange/black wire connected to terminal LO (rated speed) on the blower selection speed terminal block. Speed tap 3 can be overridden if taps 4 or 5 are energized by changing the position of the orange/black wire on the blower selection speed terminal block to MED (4) or HI (5) positions.

Speed Tap 4 – Optional MED Cooling & Heating

Speed tap 4 is programmed to a higher than rated speed in the ECM motor. This is a user-selectable airflow amount that will be higher than rated airflow. Tap 4 is used for cooling operation if the orange/black wire on the blower speed selection terminal block is moved to MED. Speed tap 4 can be overridden if tap 5 is energized.

Speed Tap 5 – Optional HI Cooling & Heating

Speed tap 5 is programmed to the highest speed in the ECM motor. This is a user-selectable airflow amount that will provide the highest rated airflow. Tap 5 is used for cooling operation if the orange/black wire on the blower speed selection terminal block is moved to HI.

Dirty Filter Switch

1. Disconnect all power to the unit. Remove control panel outer cover and upper front panel.
2. The dirty filter switch is located on top of the filter partition between the blower wheels (see Figure 29 on page 44). The dirty filter indicator light and reset switch is located on the right side of the filter access opening above the control panel. Remove the cover on the dirty filter switch and ensure the knob is set at 0.4" W.C. (see Figure 30 on page 45). This is only a recommended starting point prior to making switch adjustments. Switch setting is highly dependent on filter type used, blower speed, unit ducting and other unit installation

characteristics. See **Dirty Filter Switch Adjustment** for instructions on how to make proper switch adjustments.

3. Re-install upper front panel.

Dirty Filter Switch Adjustment

1. Apply power to the unit.
2. Turn the unit indoor blower on (energize R-G on low voltage terminal board).
3. With air filters installed and switch initially set at 0.4" W.C. (see Step 2 under **Dirty Filter Switch**), begin restricting the air filter of the unit using a piece of cardboard under the filters until the switch trips and the light comes on. If the filter is restricted by 75% (or desired restriction amount), skip to Step 6.
4. If switch setting adjustment is required, disconnect power to the unit. Remove the upper front panel and the cover on the airflow switch so that adjustment can be made. If the switch tripped before 75% restriction was reached, turn the knob slightly clockwise. If the switch tripped after 75%, turn the knob counter-clockwise (see Figure 30).

FIGURE 29
Dirty Filter Switch and Dirty Filter Indicator Light/Reset Switch

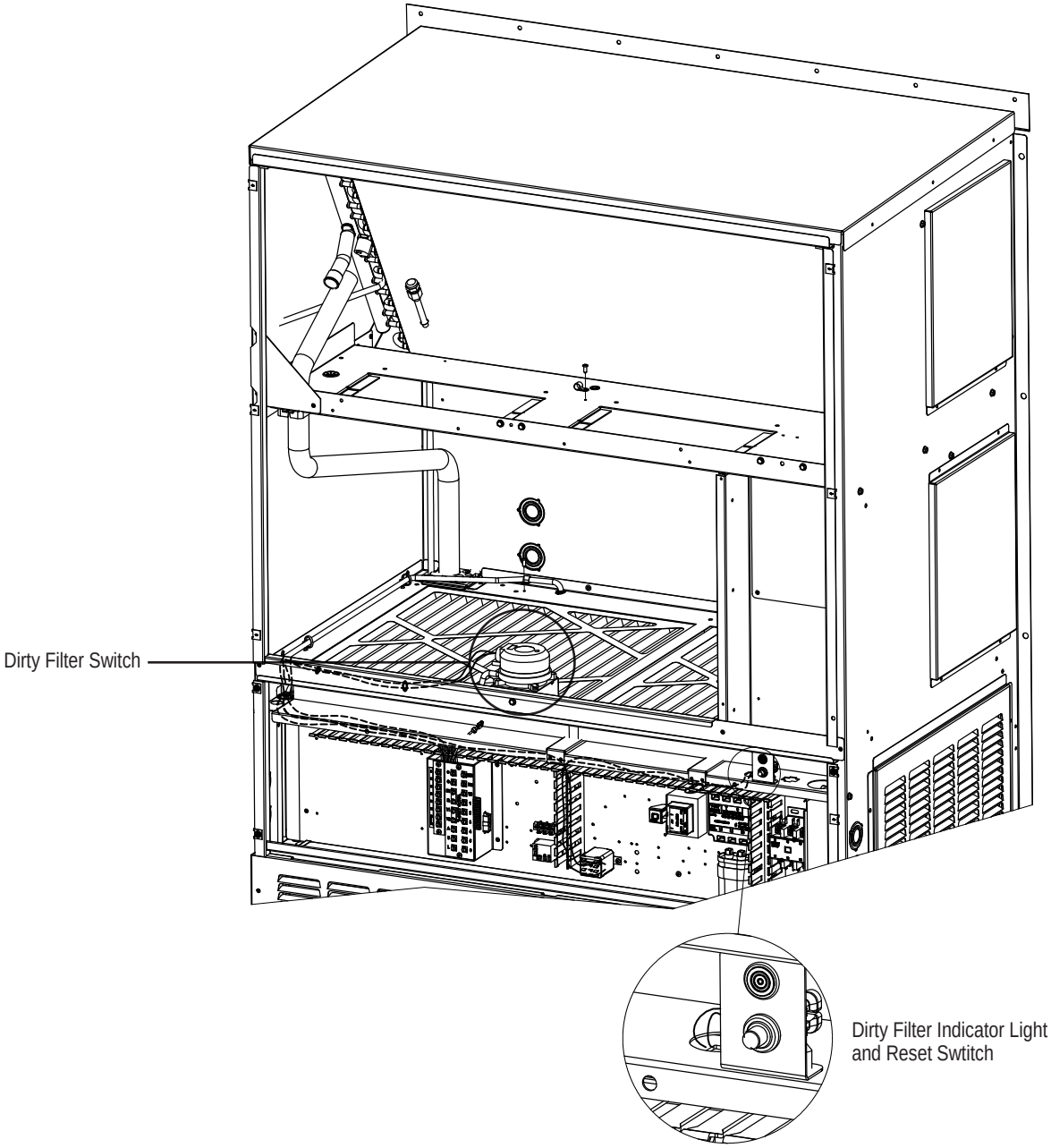

5. Replace the upper front panel and repeat Steps 1-3. Continue to make adjustments described in Step 4 until the desired restriction is obtained.
6. Remove the restriction and reset the filter switch. Replace the switch cover once adjustment is complete.
7. Install the outer control panel cover. This completes the adjustment.

FIGURE 30
Adjusting Dirty Filter Switch

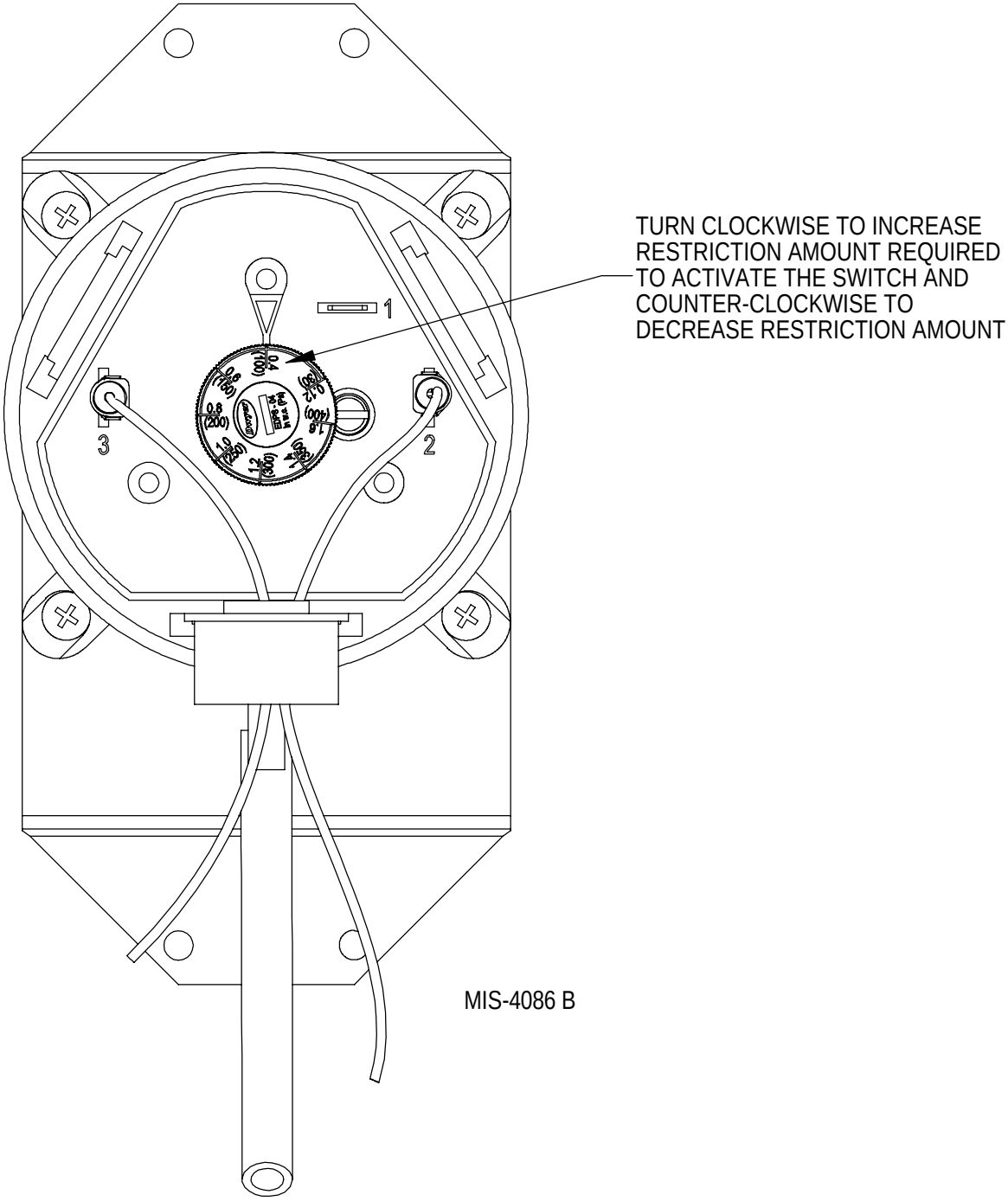

GRAPH 1
W42HY Indoor Airflow Performance – Wet Coil

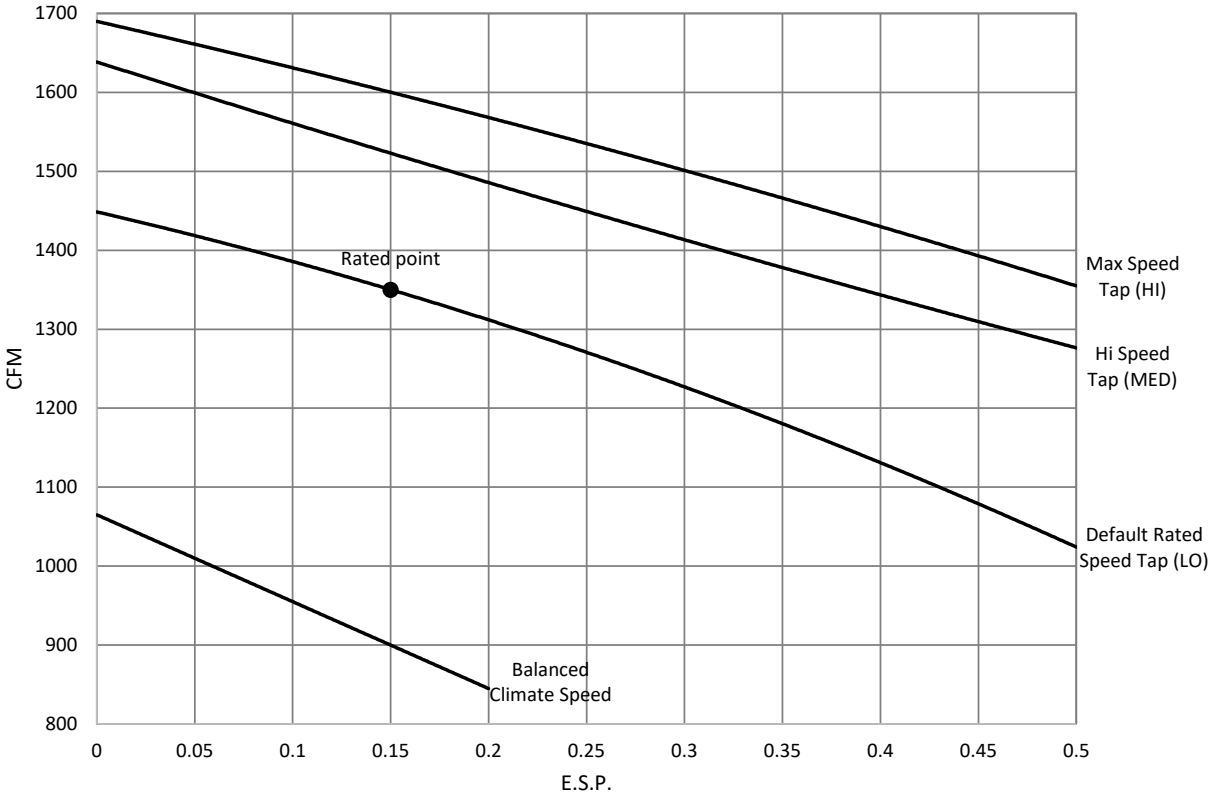

GRAPH 2
W48HY Indoor Airflow Performance – Wet Coil

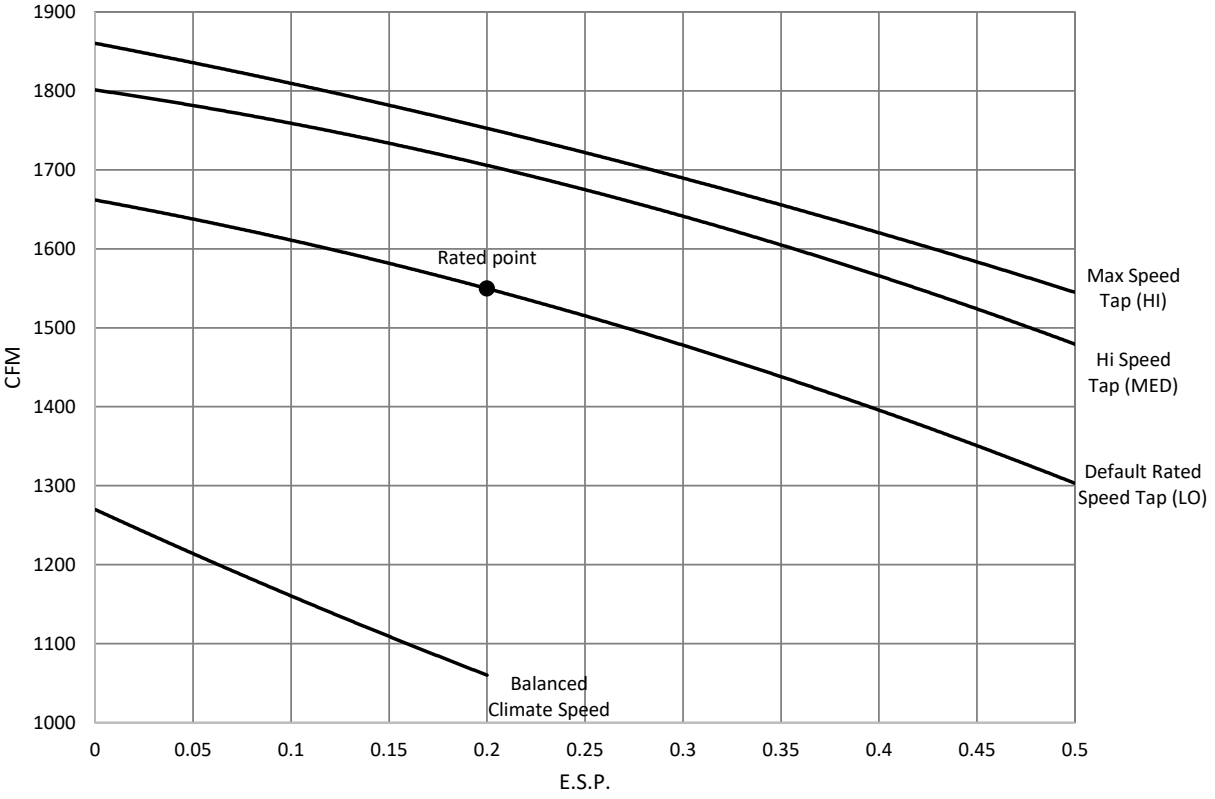

GRAPH 3
W60HY Indoor Airflow Performance – Wet Coil

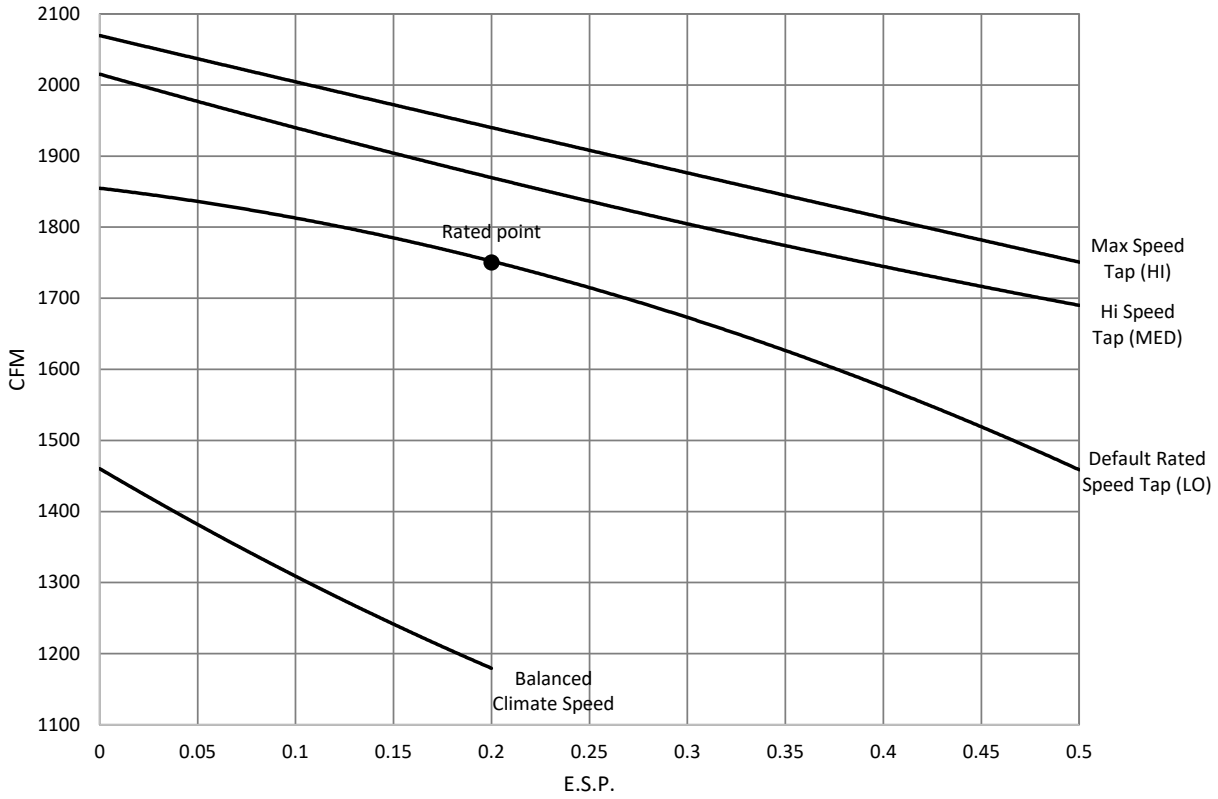

TABLE 15
Maximum ESP of Operation
Electric Heat Only

Model	W42HY/D	W48HY/D	W60HY/D
-A05	.50	.50	.50
-A10	.50	.50	.50
-A15	.50	.50	.50
-B05	.50	.50	
-B09	.50	.50	.50
-B15	.50	.50	.50
-C05	.50	.50	
-C09	.50	.50	.50
-C15	.50	.50	.50

Values shown are for units equipped with a 2" pleated MERV 13 filter.

TABLE 16
Electric Heat

Electric Heat Nomenclature	Nominal KW	Total KW and BTUH @ Field-Supplied Voltage										
		@ 230V				@ 208V				@ 460V		
		KW	1-PH Amps	3-PH Amps	BTUH	KW	1-PH Amps	3-PH Amps	BTUH	KW	3-PH Amps	BTUH
05	5.0	4.6	20.0	11.5	15,700	3.8	18.0	10.4	12,800	4.6	5.8	15,700
09	9.0	8.3	--	20.8	28,300	6.8	--	18.7	23,000	8.3	10.4	28,300
10	10.0	9.2	40.0	--	31,400	7.5	36.1	--	25,600	--	--	--
15	15.0	13.8	60.0	34.6	47,100	11.3	54.1	31.2	38,400	13.8	17.3	47,100

TABLE 17
Vent and Control Options

Part Number	Description	230V Units	460V Units
CMC-32	Start Kit (230V 1-Phase)	X	
CMC-33	Dirty Filter Switch Kit	X	X
CMC-35	Alarm Relay	X	X
CMC-38	Crankcase Heater – 230V	X	
CMC-39	Crankcase Heater – 460V		X
CMH-35	Low Ambient Control – On/Off (LAC)	X	X
CMH-36	Outdoor Thermostat (ODT)	X	X
CMH-39	Low Ambient Control and Outdoor Thermostat – Heat Pump (LAC & ODT)	X	X
BOP5	Blank Off Plate	X	X
FAD-NE5	Fresh Air Damper – No Exhaust	X	X
FAD-BE5	Fresh Air Damper – Barometric Exhaust	X	X
CRV-F5	Commercial Ventilator – On/Off, Spring Return	X	X
CRV-V5	Commercial Ventilator – 0-10V, Spring Return	X	X
ECON-NC5	Economizer – Bldg. Equipment, 0-10V, No Controls	X	X
ECON-WD5	Economizer – Bldg. Equipment, Enthalpy	X	X
ECON-DB5	Economizer – Bldg. Equipment, Temperature	X	X
ERV-FA5	Energy Recovery Ventilator – 230V	X	
ERV-FC5	Energy Recovery Ventilator – 460V		X

TABLE 18
Optional Accessories

		W42HY-A	W42HY-B	W42HY-C	W42HYDA	W42HYDB	W42HYDC	W48HY-A	W48HY-B	W48HY-C	W48HYDA	W48HYDB	W48HYDC	W60HY-A	W60HY-B	W60HY-C	W60HYDA	W60HYDB	W60HYDC
Heater Kits	EHCH036A-C05			X			X			X			X						
	EHCH036A-C09			X			X			X			X			X			X
	EHCH036A-C15			X			X			X			X			X			X
	EHCH042A-B05								X			X							
	EHCH042A-B09		X			X			X			X			X			X	
	EHCH042A-B15		X			X			X			X							
	EHWH042A-A05	X			X														
	EHWH042A-A10	X			X														
	EHWH042A-A15	X			X														
	EHWH042A-B05		X			X													
	EHWH048A-A05							X			X			X			X		
	EHWH048A-A10							X			X								
	EHWH048A-A15							X			X								
	EHWH060A-A10													X			X		
	EHWH060A-A15													X			X		
	EHWH060A-B15														X			X	
Circuit Breaker (WMCBC)	WMCBC-04B		X			X			X			X							
	WMCBC-05B														X			X	
	WMCBC-06A	X			X														
	WMCBC-06C			X			X			X			X			X			X
	WMCBC-07A							X			X			X			X		

GRAPH 4
W42HY FAD-NE5 W/O Exhaust Ventilation Delivery

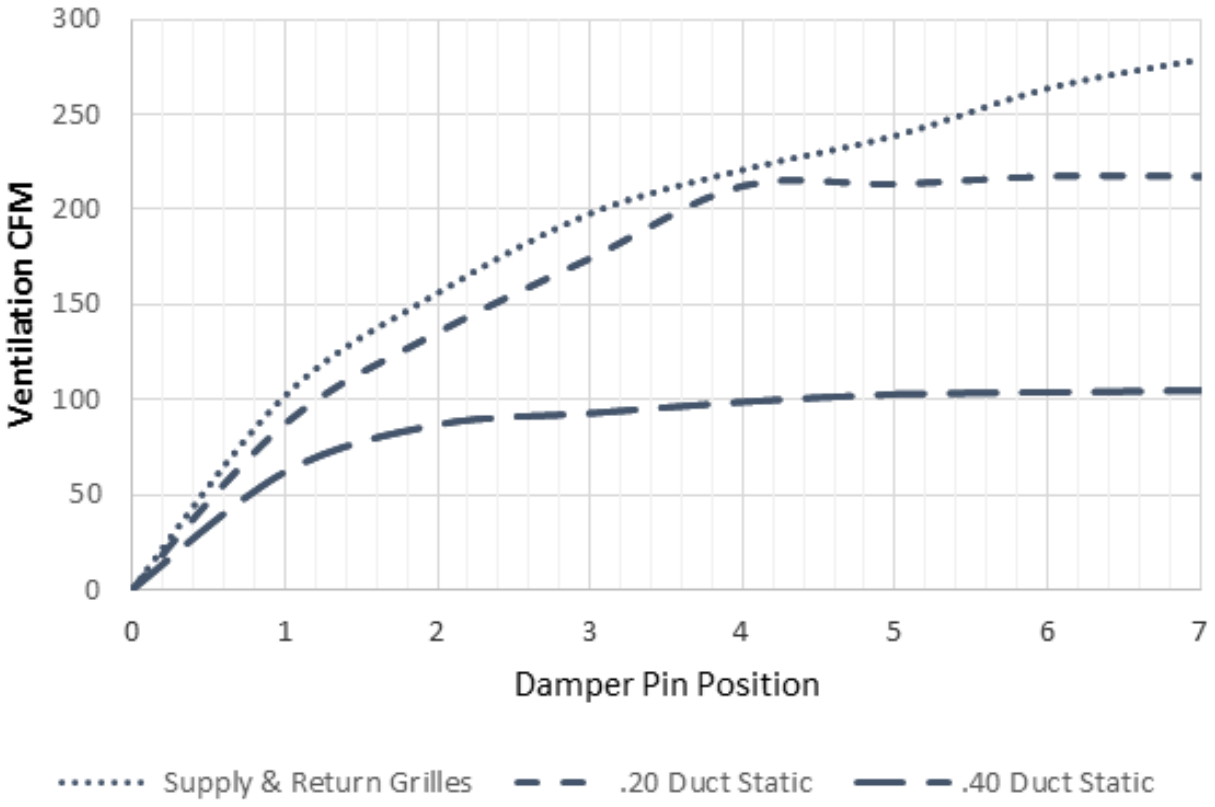

GRAPH 5
W48HY FAD-NE5 W/O Exhaust Ventilation Delivery

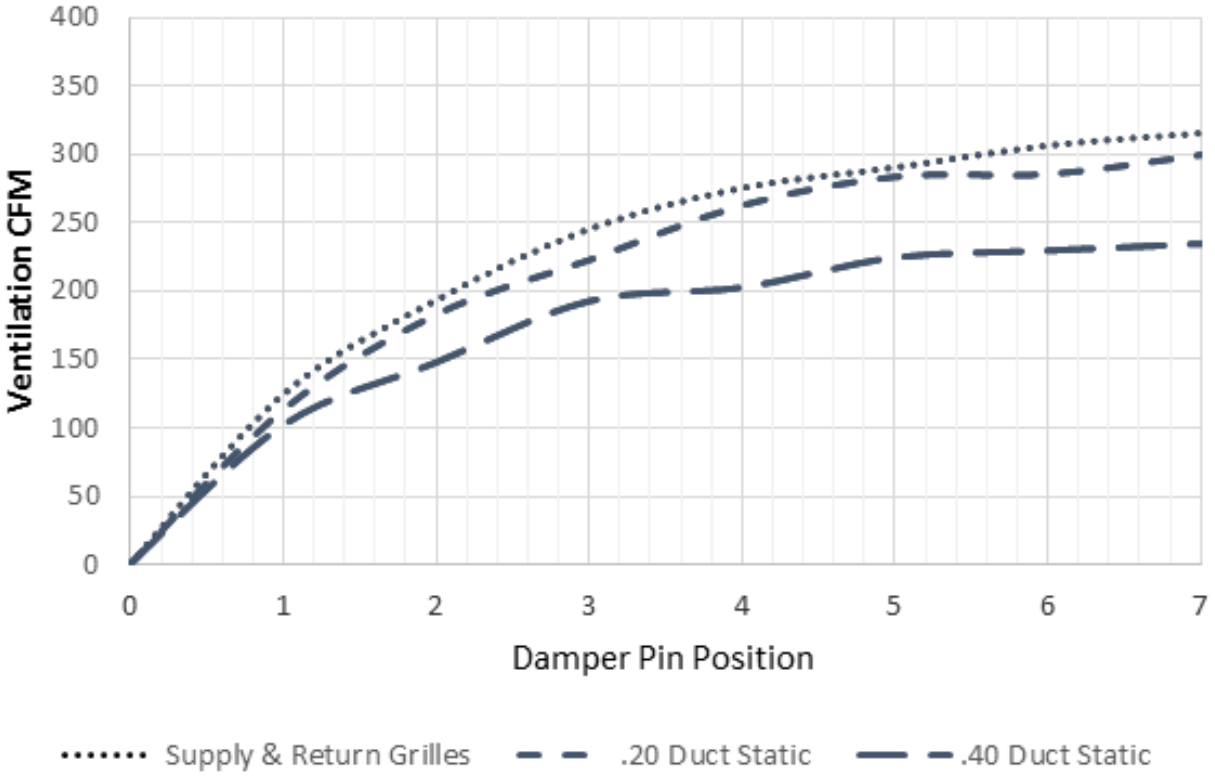
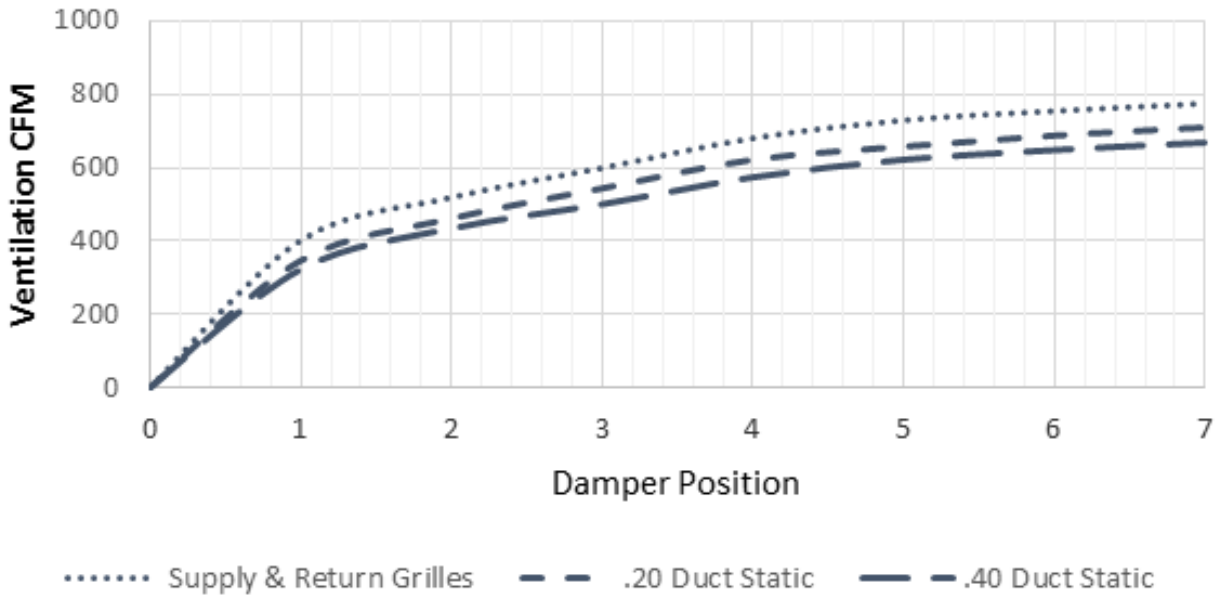
GRAPH 6
W60HY FAD-NE5 W/O Exhaust Ventilation Delivery