REPLACEMENT PARTS MANUAL

WALL-MOUNTED VARIABLE CAPACITY ENVIRONMENTAL CONTROL UNITS

Models:

W3RV2-R W3LV2-R
W3RV2-S W3LV2-S
W3RV2-T W3LV2-T

Contents

Description	Page
Cabinet Components – Right (Extreme Duty Door)	
◆ Exploded View	2
◆ Usage List	3
Cabinet Components – Right (Moderate Duty Door)	
◆ Exploded View	4
◆ Usage List	5
Cabinet Components – Left (Extreme Duty Door)	
◆ Exploded View	6
◆ Usage List	7
Cabinet Components – Left (Moderate Duty Door)	
◆ Exploded View	8
◆ Usage List	9
Functional Components	
◆ Exploded View – Right Hand	10
◆ Exploded View – Left Hand	11
◆ Usage List – Right & Left Hand	12
Control Panel	
◆ Layout View – Right Hand	13
◆ Layout View – Left Left	14
◆ Usage List – Right & Left Hand	15
Blower Assembly	
◆ Exploded View	16
◆ Usage List	16

General Notes

- Revised and/or additional pages may be issued from time to time.
- A complete and current manual consists of pages shown in the following contents section.

Important

- Contact the installing and/or local Bard distributor for all parts requirements. Make sure to have the complete model and serial number available from the unit rating plates.

Bard® SINCE 1914
Climate Control Solutions

Bard Manufacturing Company, Inc.
Bryan, Ohio 43506

www.bardhvac.com

Manual: 2110-1416C
Supersedes: 2110-1416B
Date: 7-13-18
REVISED: 7-17-24

7-17-24: Correction made to page 12

CABINET COMPONENTS – RIGHT (EXTREME DUTY DOOR)

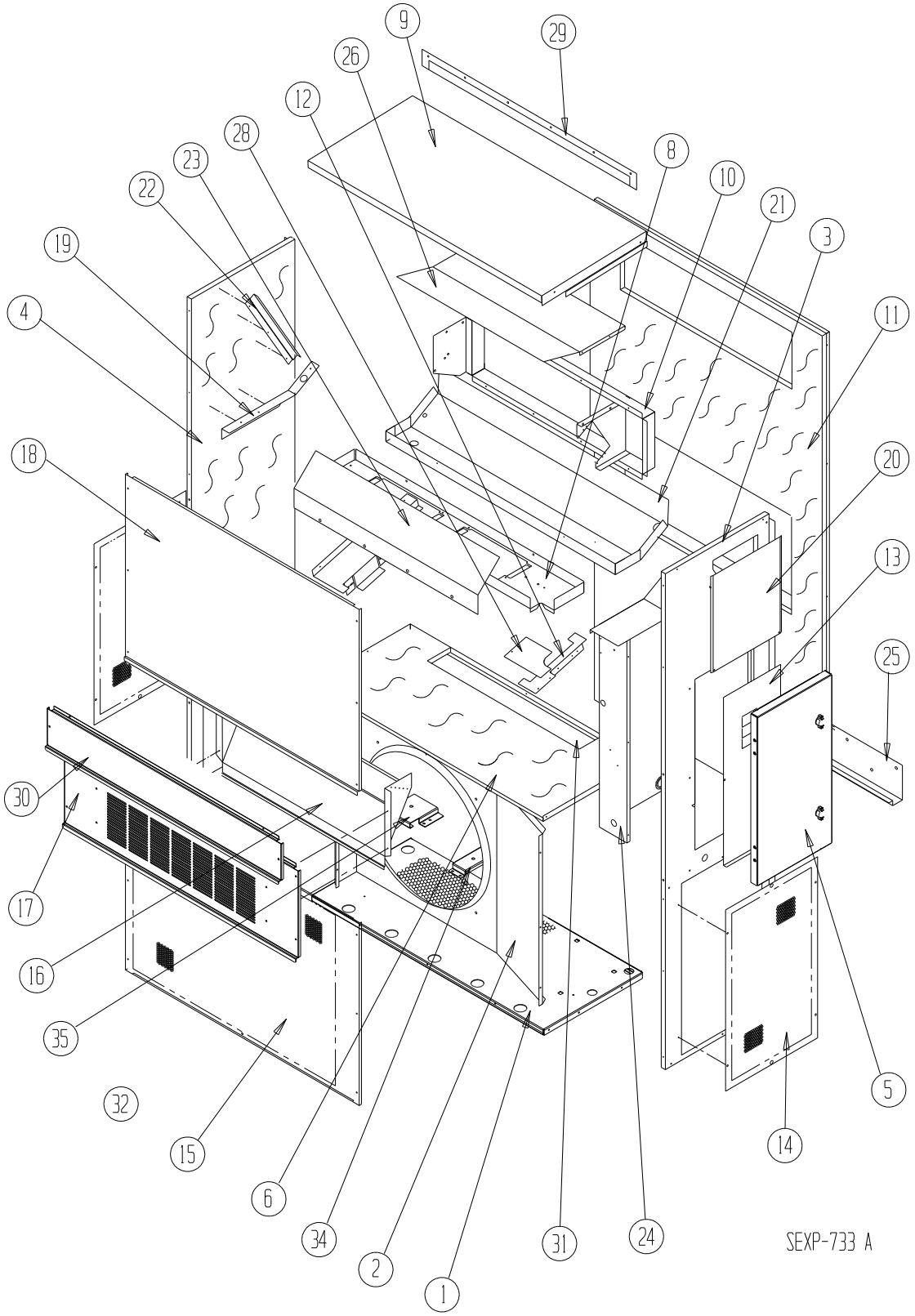

CABINET COMPONENTS – RIGHT (EXTREME DUTY DOOR)

Drawing No.	Part No.	Description	W3RV2-R,S	W3RV2-T
1	S127-486	Lower Base	X	X
1	S127-488	Lower Base	X	X
2	125-022	Fan Shroud	X	X
2	125-057 ③	Fan Shroud	X	X
3	S501-849-* ①	Right Side	X	X
3	S501-851 ②	Right Side	X	X
3	S501-850 ③	Right Side	X	X
4	S501-711-* ①	Left Side	X	X
4	S501-723 ②	Left Side	X	X
4	S501-721 ③	Left Side	X	X
5	DDD3A-* ①	Control Panel Cover (Outer)	X	X
5	DDD3A-S ④	Control Panel Cover (Outer)	X	X
6	S521X466	Condenser Partition	X	X
8	121X467	Blower Partition	X	X
9	S507-308-* ①	Top	X	X
9	S507-320 ②	Top	X	X
9	S507-319 ③	Top	X	X
10	S111X030	Outlet Air Frame Assembly	X	X
11	S508-088	Back	X	X
11	S508-290 ②	Back	X	X
11	S508-222 ③	Back	X	X
12	113X480	Filter Bracket	2	2
13	S132-104	Control Panel Cover (Inner)	X	
13	S132-208	Control Panel Cover (Inner)		X
14	118-056-* ①	Side Grille	2	2
14	118-060 ②	Side Grille	2	2
14	118-067 ③	Side Grille	2	2
15	118-059-* ①	Condenser Grille	X	X
15	118-061 ②	Condenser Grille	X	X
15	118-066 ③	Condenser Grille	X	X
16	BFAD-3	Fresh Air Damper Assembly	X	X
17	S553-523-* ①	Vent Option Door	X	X
17	S553-550 ②	Vent Option Door	X	X
17	S553-549 ③	Vent Option Door	X	X
18	S514-241-* ①	Upper Front	X	X
18	S514-239 ②	Upper Front	X	X
18	S514-238 ③	Upper Front	X	X
19	105X850	Left Side Support	X	X
20	S543-175-* ①	Heater Access Cover Assembly	X	X
20	S543-184 ②	Heater Access Cover Assembly	X	X
20	S543-185 ③	Heater Access Cover Assembly	X	X
21	S123-127	Drain Pan	X	X
22	147-044	Evaporator Support	X	X
23	135-214	Air Baffle	X	X
24	Control Panel Assembly	See Control Panel Assembly Drawing and Parts List	X	X
25	113-140	Bottom Mounting Bracket	X	X
26	135X123	Heat Shield	X	X
28	137-259	Fill Plate	X	X
29	113-149-* ①	Top Rain Flashing	X	X
29	113-360 ③	Top Rain Flashing	X	X
30	S553-524-* ①	Filter Door	X	X
30	S553-554 ②	Filter Door	X	X
30	S553-553 ③	Filter Door	X	X
31	S536X609	Condenser Partition Block-Off Plate	X	X
34	113-406	Accumulator Bracket	X	X
35	113-407	Receiver Bracket	X	X
NS	105-1302	Grommet Retainer	X	X

① *Exterior cabinet parts are manufactured with various paint color options. To ensure the proper paint color is received, include the complete model and serial number of the unit for which cabinet parts are being ordered.*

② *Exterior cabinet parts are manufactured from aluminum Code "A"*

③ *Exterior cabinet parts are manufactured from stainless steel Code "S"*

④ *Exterior cabinet parts are used for both aluminum and stainless steel cabinets*

NS – Not Shown

CABINET COMPONENTS – RIGHT (MODERATE DUTY DOOR)

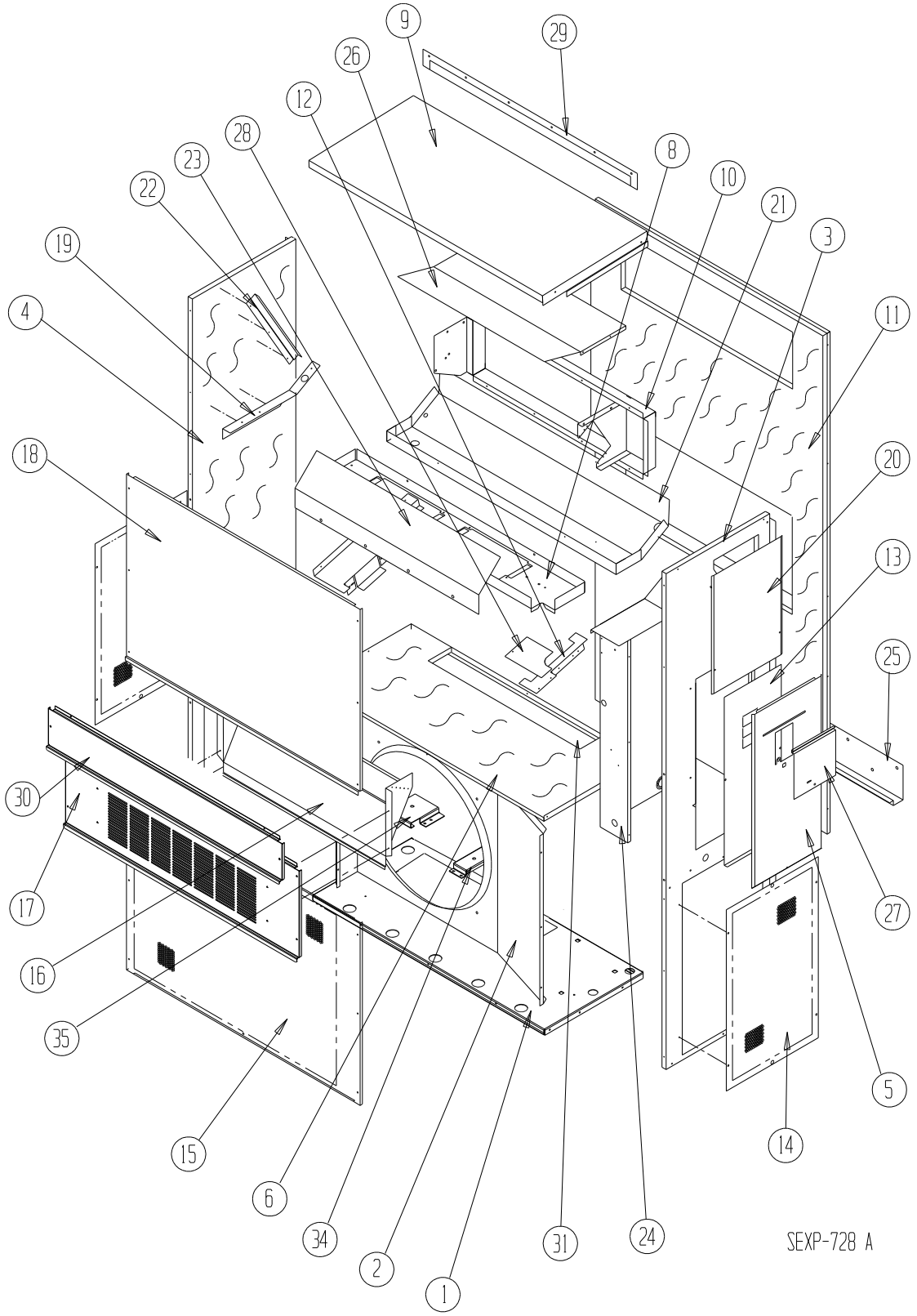

CABINET COMPONENTS – RIGHT (MODERATE DUTY DOOR)

Drawing No.	Part No.	Description	W3RV2-R,S	W3RV2-T
1	S127-486	Lower Base	X	X
1	S127-488 ③	Lower Base	X	X
2	125-022	Fan Shroud	X	X
2	125-057 ③	Fan Shroud	X	X
3	S501-684-* ①	Right Side	X	X
3	S501-722 ②	Right Side	X	X
3	S501-720 ③	Right Side	X	X
4	S501-711-* ①	Left Side	X	X
4	S501-723 ②	Left Side	X	X
4	S501-721 ③	Left Side	X	X
5	S533-228-* ①	Control Panel Cover (Outer)	X	X
5	S533-236 ②	Control Panel Cover (Outer)	X	X
5	S533-235 ③	Control Panel Cover (Outer)	X	X
6	S521X466	Condenser Partition	X	X
8	121X467	Blower Partition	X	X
9	S507-308-* ①	Top	X	X
9	S507-320 ②	Top	X	X
9	S507-319 ③	Top	X	X
10	S111X030	Outlet Air Frame Assembly	X	X
11	S508-088	Back	X	X
11	S508-290 ②	Back	X	X
11	S508-222 ③	Back	X	X
12	113X480	Filter Bracket	2	2
13	S132-104	Control Panel Cover (Inner)	X	
13	S132-208	Control Panel Cover (Inner)		X
14	118-056-* ①	Side Grille	2	2
14	118-060 ②	Side Grille	2	2
14	118-067 ③	Side Grille	2	2
15	118-059-* ①	Condenser Grille	X	X
15	118-061 ②	Condenser Grille	X	X
15	118-066 ③	Condenser Grille	X	X
16	BFAD-3	Fresh Air Damper Assembly	X	X
17	S553-523-* ①	Vent Option Door	X	X
17	S553-550 ②	Vent Option Door	X	X
17	S553-549 ③	Vent Option Door	X	X
18	S514-241-* ①	Upper Front	X	X
18	S514-239 ②	Upper Front	X	X
18	S514-238 ③	Upper Front	X	X
19	105X850	Left Side Support	X	X
20	S543-175-* ①	Heater Access Cover Assembly	X	X
20	S543-184 ②	Heater Access Cover Assembly	X	X
20	S543-185 ③	Heater Access Cover Assembly	X	X
21	S123-141	Drain Pan	X	X
22	147-044	Evaporator Support	X	X
23	135-214	Air Baffle	X	X
24	Control Panel Assembly	See Control Panel Assembly Drawing and Parts List	X	X
25	113-140	Bottom Mounting Bracket	X	X
26	135X123	Heat Shield	X	X
27	S153-218-* ①	Disconnect Access Door	X	X
27	S153-387 ②	Disconnect Access Door	X	X
27	S153-405 ③	Disconnect Access Door	X	X
28	137-259	Fill Plate	X	X
29	113-149-* ①	Top Rain Flashing	X	X
29	113-360 ③	Top Rain Flashing	X	X
30	S553-524-* ①	Filter Door	X	X
30	S553-554 ②	Filter Door	X	X
30	S553-553 ③	Filter Door	X	X
31	S536X609	Condenser Partition Block-Off Plate	X	X
34	113-406	Accumulator Bracket	X	X
35	113-407	Receiver Bracket	X	X
NS	105-1302	Grommet Retainer	X	X

① *Exterior cabinet parts are manufactured with various paint color options. To ensure the proper paint color is received, include the complete model and serial number of the unit for which cabinet parts are being ordered.*

② *Exterior cabinet parts are manufactured from aluminum Code "A"*

③ *Exterior cabinet parts are manufactured from stainless steel Code "S"*

④ *Exterior cabinet parts are used for both aluminum and stainless steel cabinets*

NS – Not Shown

CABINET COMPONENTS – LEFT (EXTREME DUTY DOOR)

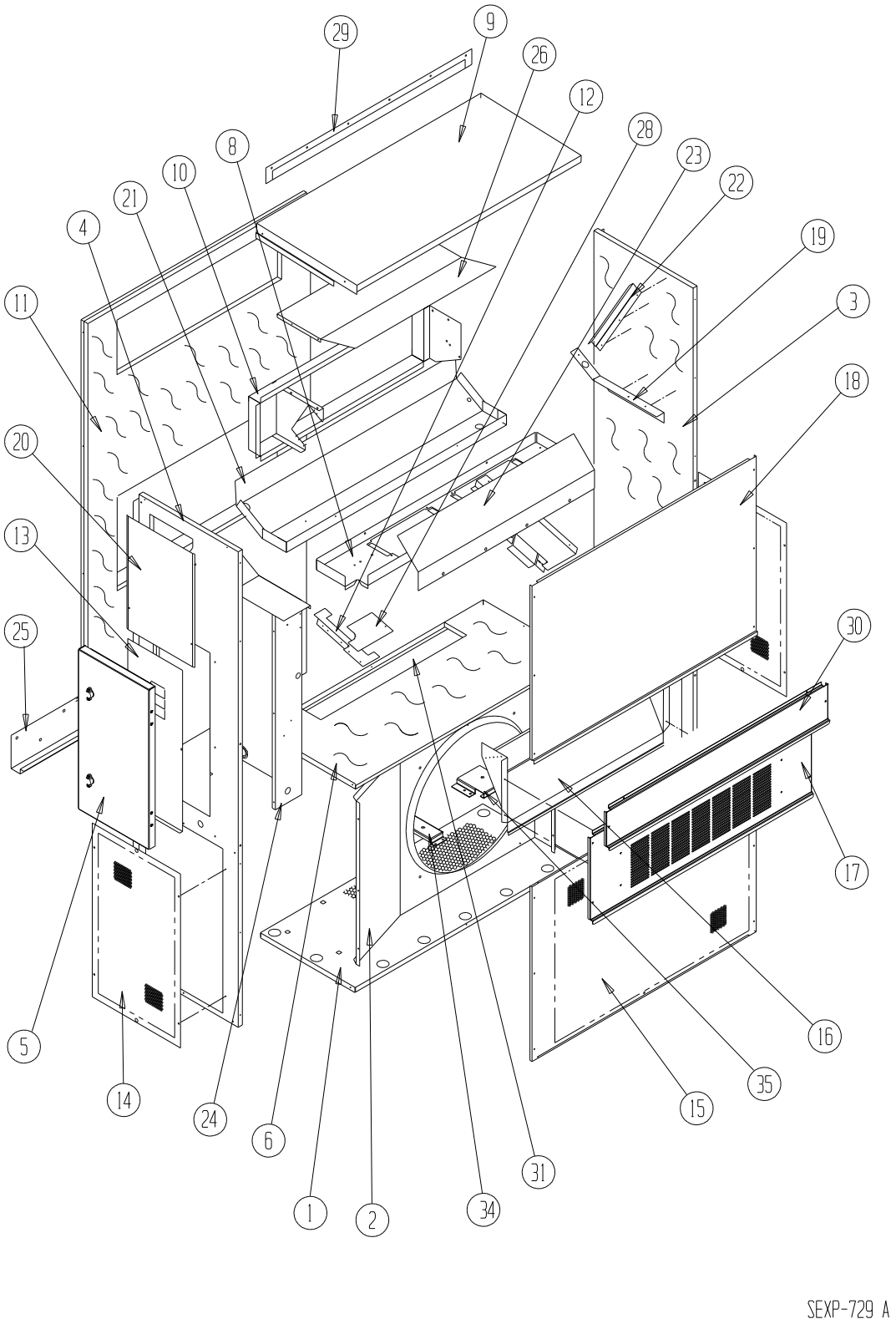

CABINET COMPONENTS – LEFT (EXTREME DUTY DOOR)

Drawing No.	Part No.	Description	W3LV2-R,S	W3LV2-T
1	S127-485	Lower Base	X	X
1	S127-487 ③	Lower Base	X	X
2	125-022	Fan Shroud	X	X
2	125-057 ③	Fan Shroud	X	X
3	S501-710-* ①	Right Side	X	X
3	S501-726 ②	Right Side	X	X
3	S501-724 ③	Right Side	X	X
4	S501-836-* ①	Left Side	X	X
4	S501-838 ②	Left Side	X	X
4	S501-837 ③	Left Side	X	X
5	DDD3L-* ①	Control Panel Cover (Outer)	X	X
5	DDD3L-S ④	Control Panel Cover (Outer)	X	X
6	S521Y466	Condenser Partition	X	X
8	121Y467	Blower Partition	X	X
9	S507-308-* ①	Top	X	X
9	S507-320 ②	Top	X	X
9	S507-319 ③	Top	X	X
10	S111Y030	Outlet Air Frame Assembly	X	X
11	S508-088	Back	X	X
11	S508-290 ②	Back	X	X
11	S508-222 ③	Back	X	X
12	113Y480	Filter Bracket	2	2
13	S132-104	Control Panel Cover (Inner)	X	
13	S132-208	Control Panel Cover (Inner)		X
14	118-056-* ①	Side Grille	2	2
14	118-060 ②	Side Grille	2	2
14	118-067 ③	Side Grille	2	2
15	118-047-* ①	Condenser Grille	X	X
15	118-062 ②	Condenser Grille	X	X
15	118-075 ③	Condenser Grille	X	X
16	BFAD-3	Fresh Air Damper Assembly	X	X
17	S553-523-* ①	Vent Option Door	X	X
17	S553-550 ②	Vent Option Door	X	X
17	S553-549 ③	Vent Option Door	X	X
18	S514-241-* ①	Upper Front	X	X
18	S514-239 ②	Upper Front	X	X
18	S514-238 ③	Upper Front	X	X
19	105Y850	Left Side Support	X	X
20	S543-175-* ①	Heater Access Cover Assembly	X	X
20	S543-184 ②	Heater Access Cover Assembly	X	X
20	S543-185 ③	Heater Access Cover Assembly	X	X
21	S123-143	Drain Pan	X	X
22	147-044	Evaporator Support	X	X
23	135-297	Air Baffle	X	X
24	Control Panel Assembly	See Control Panel Assembly Drawing and Parts List	X	X
25	113-140	Bottom Mounting Bracket	X	X
26	135Y123	Heat Shield	X	X
28	137-259	Fill Plate	X	X
29	113-149-* ①	Top Rain Flashing	X	X
29	113-360 ③	Top Rain Flashing	X	X
30	S553-524-* ①	Filter Door	X	X
30	S553-554 ②	Filter Door	X	X
30	S553-553 ③	Filter Door	X	X
31	S536Y609	Condenser Partition Block-Off Plate	X	X
34	113-406	Accumulator Bracket	X	X
35	113-407	Receiver Bracket	X	X
NS	105-1302	Grommet Retainer	X	X

① *Exterior cabinet parts are manufactured with various paint color options. To ensure the proper paint color is received, include the complete model and serial number of the unit for which cabinet parts are being ordered.*

② *Exterior cabinet parts are manufactured from aluminum Code "A"*

③ *Exterior cabinet parts are manufactured from stainless steel Code "S"*

④ *Exterior cabinet parts are used for both aluminum and stainless steel cabinets*

NS – Not Shown

CABINET COMPONENTS – LEFT (MODERATE DUTY DOOR)

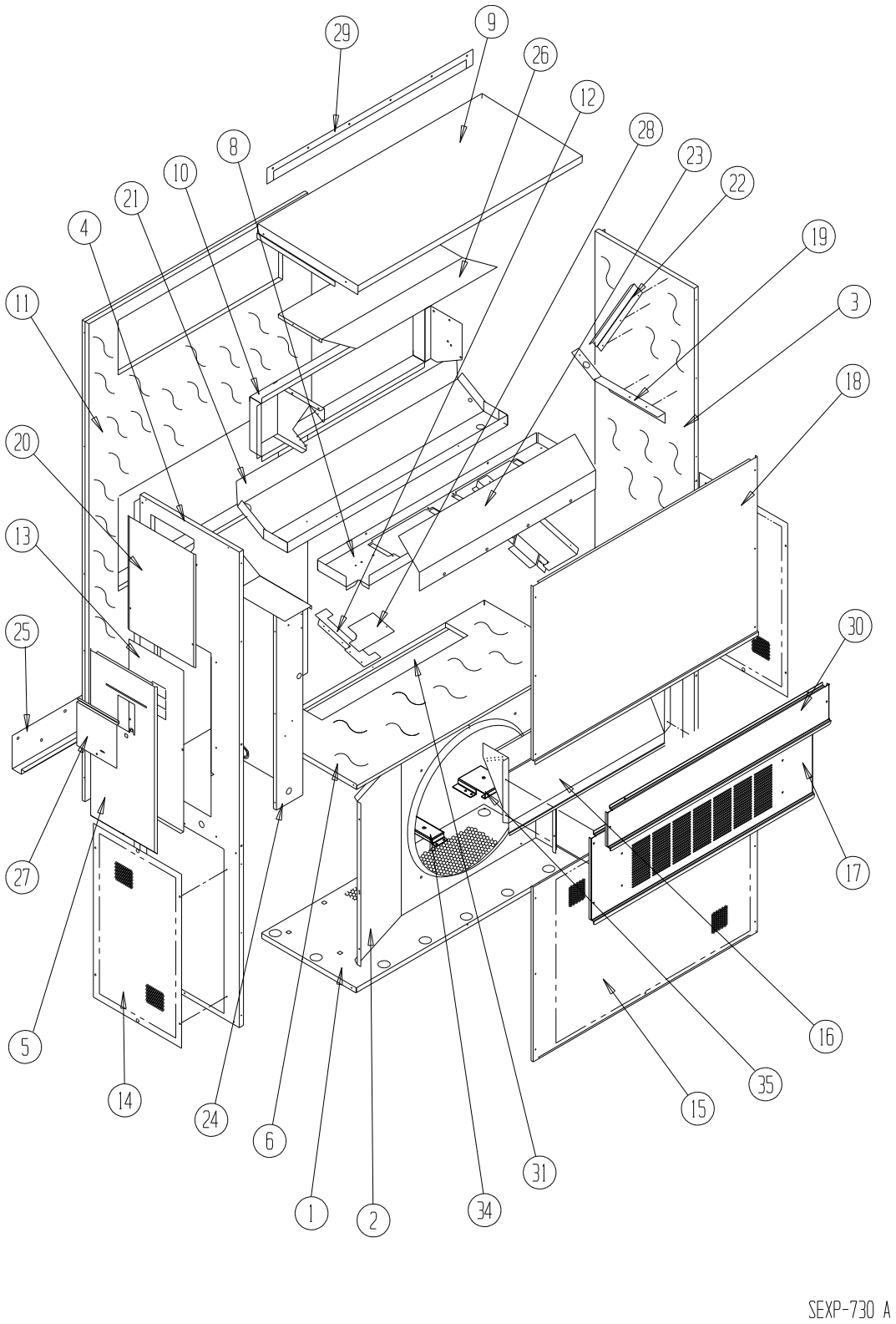

CABINET COMPONENTS – LEFT (MODERATE DUTY DOOR)

Drawing No.	Part No.	Description	W3LV2-R,S	W3LV2-T
1	S127-485	Lower Base	X	X
1	S127-487 ③	Lower Base	X	X
2	125-022	Fan Shroud	X	X
2	125-057 ③	Fan Shroud	X	X
3	S501-710-* ①	Right Side	X	X
3	S501-726 ②	Right Side	X	X
3	S501-724 ③	Right Side	X	X
4	S501-836-* ①	Left Side	X	X
4	S501-727 ②	Left Side	X	X
4	S501-725 ③	Left Side	X	X
5	S533-228-* ①	Control Panel Cover (Outer)	X	X
5	S533-236 ②	Control Panel Cover (Outer)	X	X
5	S533-235 ③	Control Panel Cover (Outer)	X	X
6	S521Y466	Condenser Partition	X	X
8	121Y467	Blower Partition	X	X
9	S507-308-* ①	Top	X	X
9	S507-320 ②	Top	X	X
9	S507-319 ③	Top	X	X
10	S111Y030	Outlet Air Frame Assembly	X	X
11	S508-088	Back	X	X
11	S508-290 ②	Back	X	X
11	S508-222 ③	Back	X	X
12	113Y195	Filter Bracket	2	2
13	S132-104	Control Panel Cover (Inner)	X	
13	S132-208	Control Panel Cover (Inner)		X
14	118-056-* ①	Side Grille	2	2
14	118-060 ②	Side Grille	2	2
14	118-067 ③	Side Grille	2	2
15	118-047-* ①	Condenser Grille	X	X
15	118-062 ②	Condenser Grille	X	X
15	118-075 ③	Condenser Grille	X	X
16	BFAD-3	Fresh Air Damper Assembly	X	X
17	S553-523-* ①	Vent Option Door	X	X
17	S553-550 ②	Vent Option Door	X	X
17	S553-549 ③	Vent Option Door	X	X
18	S514-241-* ①	Upper Front	X	X
18	S514-239 ②	Upper Front	X	X
18	S514-238 ③	Upper Front	X	X
19	105Y850	Left Side Support	X	X
20	S543-175-* ①	Heater Access Cover Assembly	X	X
20	S543-184 ②	Heater Access Cover Assembly	X	X
20	S543-127 ③	Heater Access Cover Assembly	X	X
21	S123-143	Drain Pan	X	X
22	147-044	Evaporator Support	X	X
23	135-297	Air Baffle	X	X
24	Control Panel Assembly	See Control Panel Assembly Drawing and Parts List	X	X
25	113-140	Bottom Mounting Bracket	X	X
26	135Y123	Heat Shield	X	X
27	S153-218-* ①	Disconnect Access Door	X	X
27	S153-387 ②	Disconnect Access Door	X	X
27	S153-405 ③	Disconnect Access Door	X	X
28	137-259	Fill Plate	X	X
29	113-149-* ①	Top Rain Flashing	X	X
29	113-360 ③	Top Rain Flashing	X	X
30	S553-524-* ①	Filter Door	X	X
30	S553-554 ②	Filter Door	X	X
30	S553-553 ③	Filter Door	X	X
31	S536Y609	Condenser Partition Block-Off Plate	X	X
34	113-406	Accumulator Bracket	X	X
35	113-407	Receiver Bracket	X	X
NS	105-1302	Grommet Retainer	X	X

① *Exterior cabinet parts are manufactured with various paint color options. To ensure the proper paint color is received, include the complete model and serial number of the unit for which cabinet parts are being ordered.*

② *Exterior cabinet parts are manufactured from aluminum Code "A"*

③ *Exterior cabinet parts are manufactured from stainless steel Code "S"*

④ *Exterior cabinet parts are used for both aluminum and stainless steel cabinets*
NS – Not Shown

FUNCTIONAL COMPONENTS – RIGHT HAND

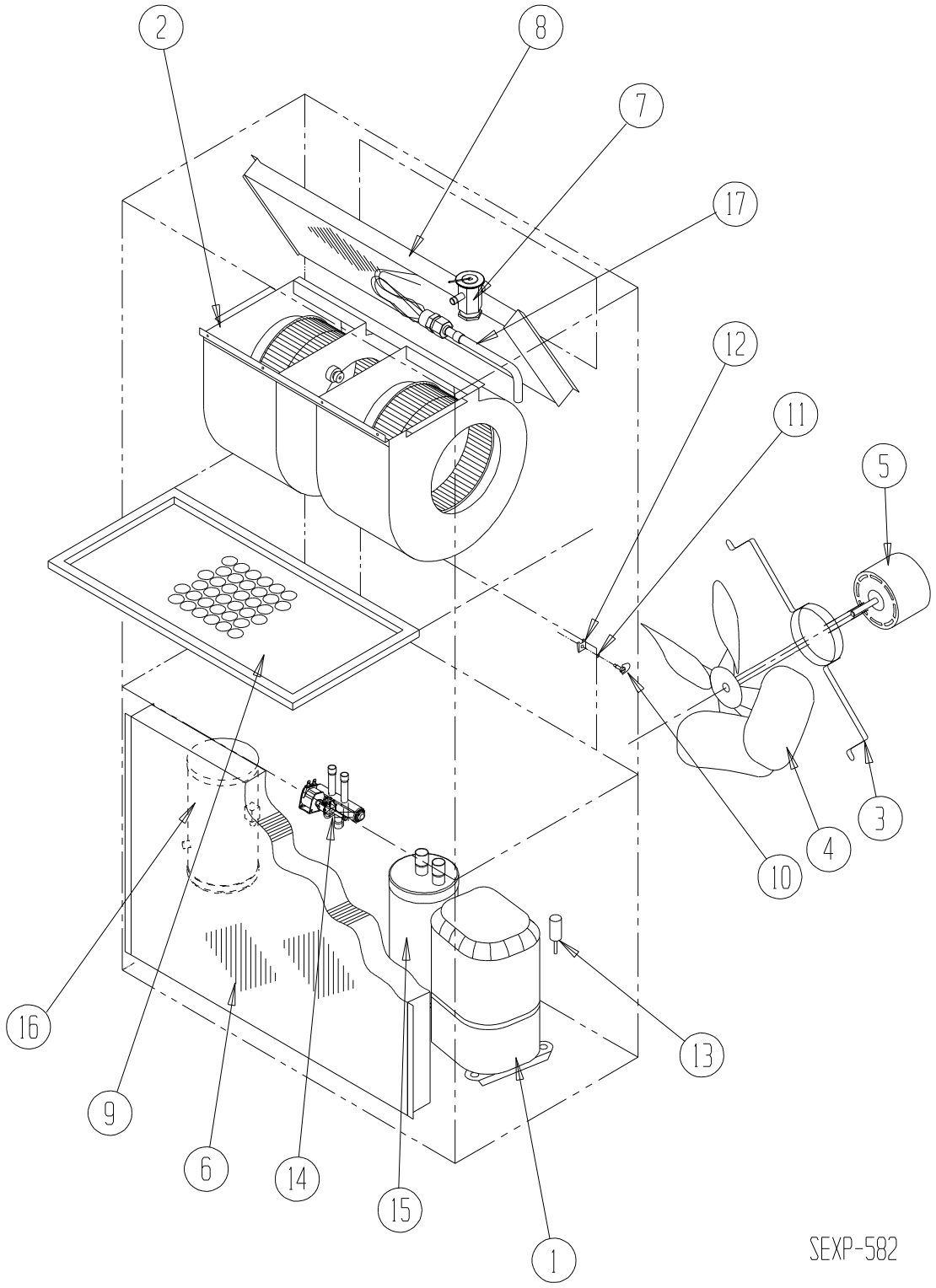

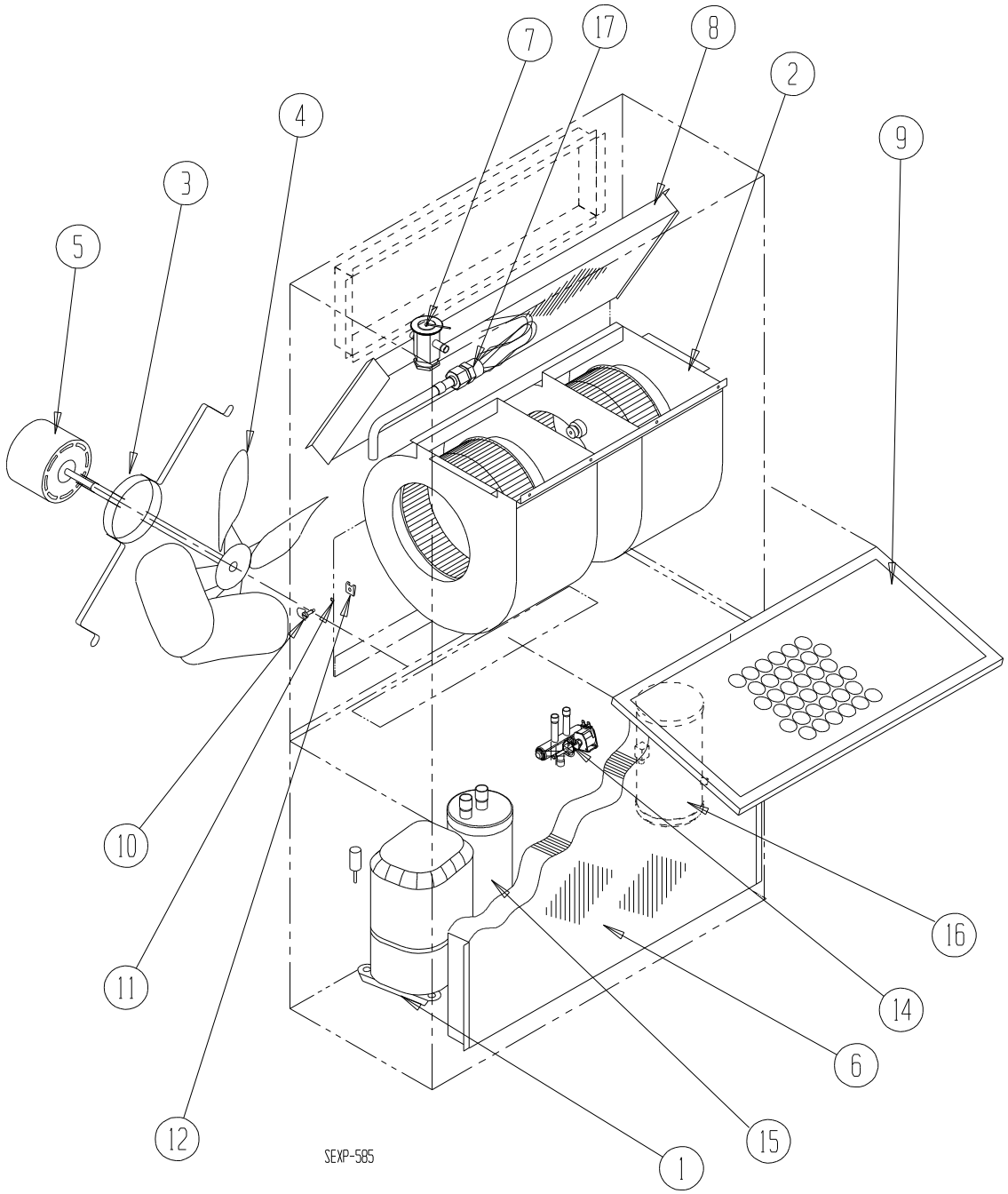
7
17
8
2
4
9
3
5
10
16
11
14
6
12
15
1
SEXP-585

FUNCTIONAL COMPONENTS – RIGHT & LEFT HAND

Drawing No.	Part No.	Description	W3RV2-R	W3RV2-S	W3RV2-T	W3LV2-R	W3LV2-S	W3LV2-T
1	8000-355	Compressor	X			X		
1	8000-356	Compressor		X			X	
1	8000-357	Compressor			X			X
2	S900-342-001	Blower Assembly	X	X		X	X	
2	S900-339-001	Blower Assembly			X			X
3	8200-001	Fan Motor Mount	X	X	X	X	X	X
4	5151-045	Fan Blade	X	X	X	X	X	X
5	S8106-061-0126	1/2 HP ECM Motor with Programmed Control	X	X		X	X	
5	**S8106-058-0127**	1/2 HP ECM Motor with Programmed Control			X			X
6	5051-066BX	Condenser Coil	X	X	X			
6	5051-089BX	Condenser Coil				X	X	X
7	5651-214	Cooling TXV	X	X	X	X	X	X
8	5060-064BX	Evaporator Coil	X	X	X	X	X	X
9	7004-019	Air Filter 1" Throw-Away	X	X	X	X	X	X
9	7003-031	Air Filter 1" Washable ①	X	X	X	X	X	X
9	7004-026	Air Filter 2" Pleated ①	X	X	X	X	X	X
10	1171-022	1/4 Turn Fastener	X	X	X	X	X	X
11	1171-024	1/4 Turn Retainer	X	X	X	X	X	X
12	1171-023	1/4 Turn Receptacle	X	X	X	X	X	X
13	1804-0462	High Pressure Switch (Flare)	X	X	X	X	X	X
13	1804-0107	Low Pressure Switch (Flare)	X	X	X	X	X	X
14	5650-049	Solenoid Valve	X	X	X	X	X	X
15	5202-022	Accumulator	X	X	X	X	X	X
16	5203-008	Receiver	X	X	X	X	X	X
17	800-0392	Cooling Distributor Assembly	X	X	X	X	X	X
NS	5201-001	Filter Drier	X	X	X	X	X	X
NS	8605-017	Crankcase Heater	X	X		X	X	
NS	8605-018	Crankcase Heate			X			X
NS	8408-039	Discharge Line Thermostat	X	X	X	X	X	X
NS	8406-128	Pressure Transducer	X	X	X	X	X	X
NS	5451-024	Tubing Grommet	2	2	2	2	2	2

NS – Not Shown
① – Optional

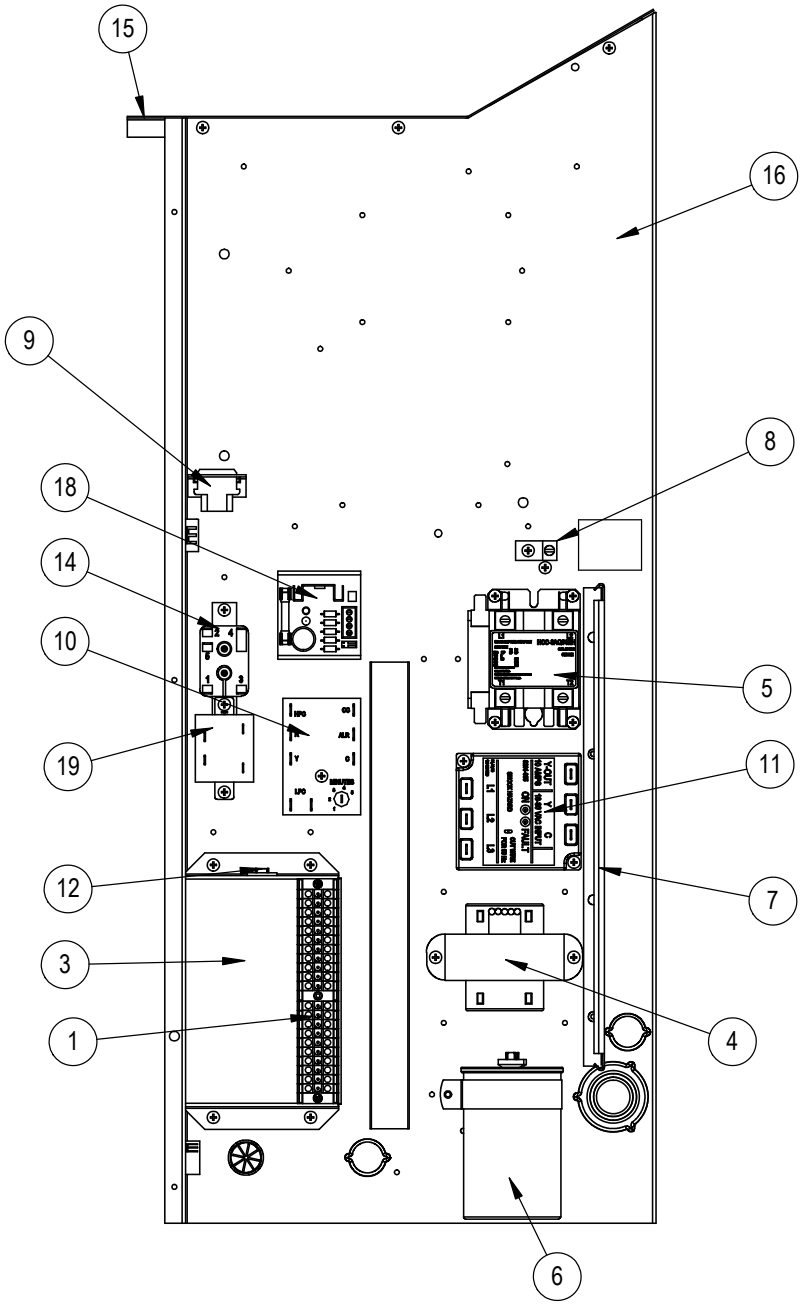

SEXP-731 A

CONTROL PANEL – LEFT HAND

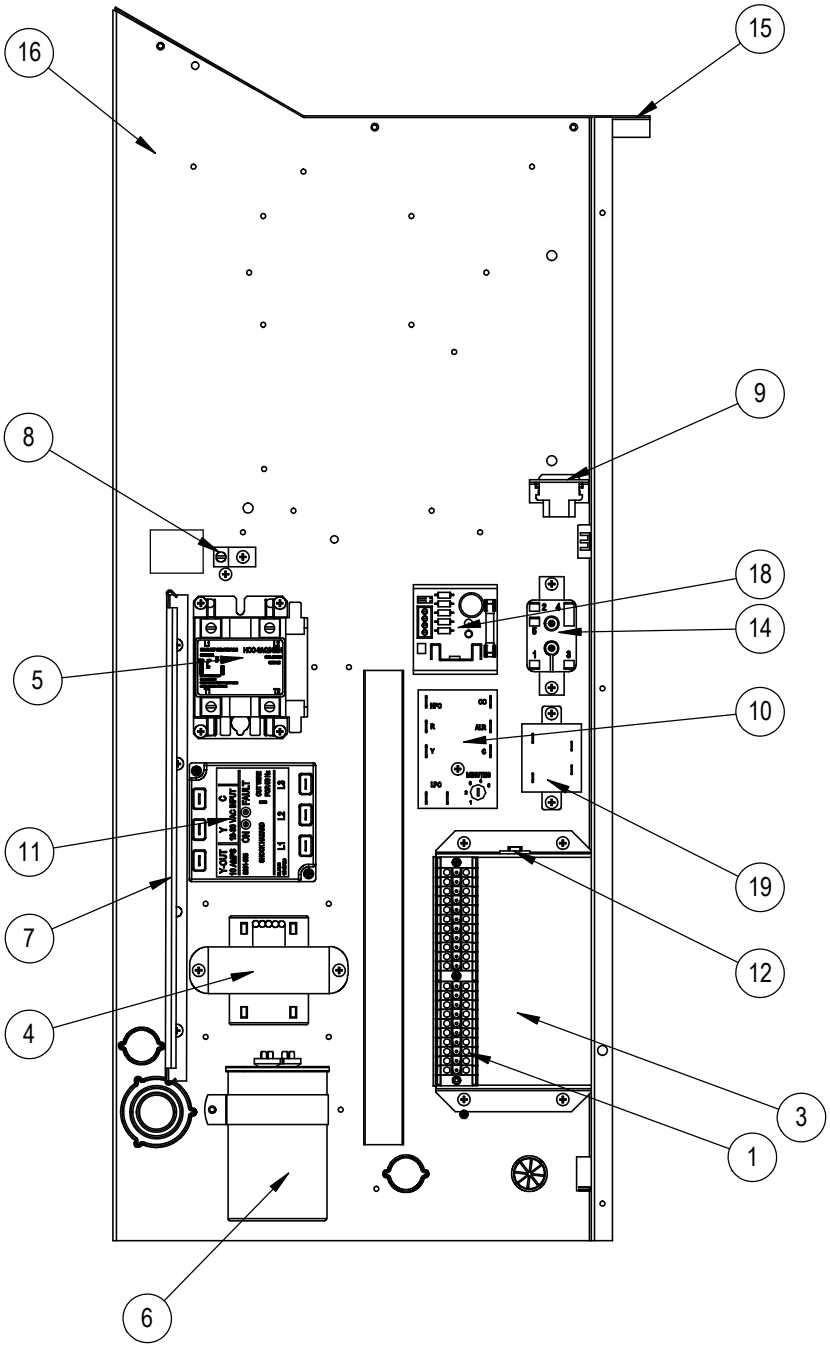

SEXP-732 A

Drawing No.	Part No.	Description	W3RV2-R	W3RV2-S	W3RV2-T	W3LV2-R	W3LV2-S	W3LV2-T
1	8607-036	Low Voltage Terminal Strip	X	X	X	X	X	X
3	117-350	Low Voltage Box	X	X	X	X	X	X
4	8407-061	Transformer	X	X		X	X	
4	8407-062	Transformer			X			X
5	8401-038	Compressor Contactor	X			X		
5	8401-037	Compressor Contactor		X	X		X	X
6	8552-092	Compressor Capacitor	X			X		
7	135-122	Wire Shield	X	X	X	X	X	X
8	8611-006	Ground Terminal	X	X	X	X	X	X
9	3000-1463	6 Pin Connector	X	X	X	X	X	X
10	8201-148	Compressor Control Module	X	X	X	X	X	X
11	8201-126	Phase Monitor		X	X		X	X
12	8614-054	Circuit Breaker	X	X	X	X	X	X
14	8201-062	Alarm Relay	X	X	X	X	X	X
15	117X137	Control Panel Top	X	X	X			
15	117Y137	Control Panel Top				X	X	X
16	117X346	Control Panel	X	X	X			
16	117Y346	Control Panel				X	X	X
18	8301-041	5VDC Supply	X	X	X	X	X	X
19	8201-149	Solid State Relay	X	X	X	X	X	X
NS	8301-014	Outdoor Air Sensor	X	X	X	X	X	X
NS	8403-066	Thermostat Controller	X	X	X	X	X	X
NS	8615-038	Circuit Breaker 35A 2 Pole (Opt) ①	X			X		
NS	8615-052	Circuit Breaker 30A 3 Pole (Opt) ①		X			X	
NS	8615-068	Toggle Disconnect (Optional)			X			X
NS	3000-1360	Pressure Transducer Harness	X	X	X	X	X	X
NS	3000-1276	Compressor Harness	X			X		
NS	3000-1244	Compressor Harness		X	X		X	X
NS	4095-175	Wiring Diagram	X			X		
NS	4095-275	Wiring Diagram		X			X	
NS	4095-375	Wiring Diagram			X			X

NS – Not Shown

① Circuit breakers listed are for units without electric heat "OZ" models.
See Heater Replacement Parts Manual for units with electric heat.

BLOWER ASSEMBLY

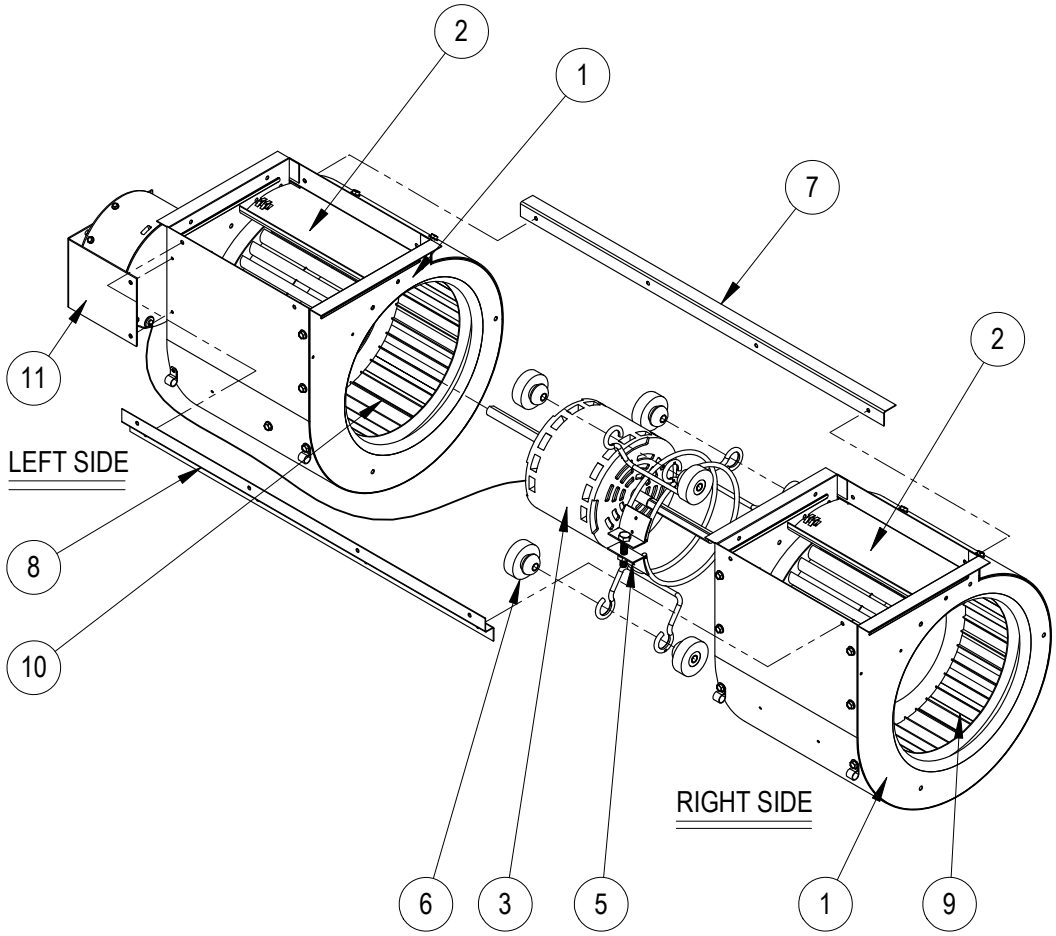

SEXP-583 A

Drawing No.	Part No.	Description	900-339-001	900-342-001
1	151-111	Blower Housing	2	2
2	144-174	Diffuser	2	2
3	S8106-060-0129	Programmed Motor w/Control	X	
3	S8106-059-0128	Programmed Motor w/Control		X
5	8200-031	Motor Mount	X	X
6	5451-011	Grommets	6	6
7	105-870	Back Brace	X	X
8	103-401	Front Brace	X	X
9	5152-090	Wheel (CW)	X	X
10	5152-091	Wheel (CCW)	X	X
11	113-637	Blower Motor Control Mount	X	