REPLACEMENT PARTS MANUAL

WALL MOUNTED
PACKAGE AIR CONDITIONER

Models:

W42AA-A	W48AA-A	W60AA-A	W72AB-A	W42AADA	W48AADA	W60AADA
W42AA-B	W48AA-B	W60AA-B	W72AB-B	W42AADB	W48AADB	W60AADB
W42AA-C	W48AA-C	W60AA-C	W72AB-C	W42AADC	W48AADC	W60AADC
W42AA-E	W48AA-E	W60AA-E	W72AB-F			
W42AA-F	W48AA-F	W60AA-F				

Contents

Description **Page**

Cabinet Components
- Exploded View 2
- Usage List 3
- Usage List 4

Functional Components
- Exploded View 6
- Usage List 7
- Usage List 8
- Usage List 9

Control Panel
- Layout View 10
- Usage List 11
- Usage List 12
- Usage List 13

Control Panel – Dehum. Models
- Exploded View 14
- Usage List 15

Description **Page**

Blower Assembly
- Exploded View 16
- Usage List 16
- Exploded View 17
- Usage List 17

General Notes

- Revised and/or additional pages may be issued from time to time.
- A complete and current manual consists of pages shown in the following contents section.

Important

- Contact the installing and/or local Bard distributor for all parts requirements. Make sure to have the complete model and serial number available from the unit rating plates.

Bard® SINCE 1914
Climate Control Solutions

Bard Manufacturing Company, Inc.
Bryan, Ohio 43506
www.bardhvac.com

Manual: 2110-1423G
Supersedes: 2110-1423F
Date: 3-21-18
REVISED: 1-25-24

1-25-24: Correction made to page 13

CABINET COMPONENTS

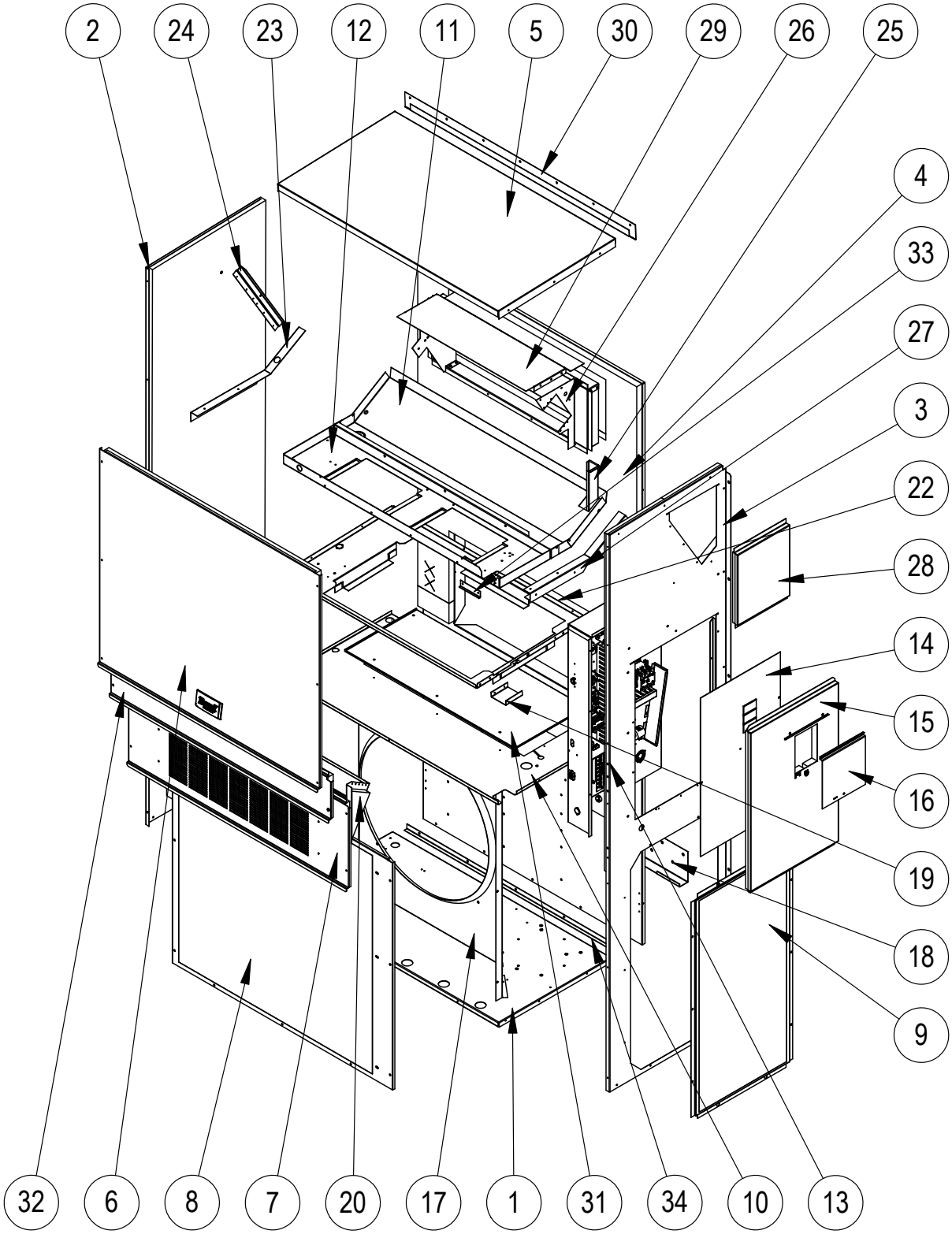

This drawing is referenced in tables on pages 3 and 4

SEXP-792

Dwg No.	Part Number	Description	W42AA-A, B, E	W42AA-C, F	W42AADA, B	W42AADC	W48AA-A, B, E	W48AA-C, F	W48AADA, B	W48AADC
1	S127-425	Lower Base	X	X	X	X	X	X	X	X
1	S127-541 ③	Lower Base	X	X	X	X	X	X	X	X
2	S501-686-* ①	Left Side	X	X	X	X	X	X	X	X
2	S501-699 ②	Left Side	X	X	X	X	X	X	X	X
2	S501-1004 ③	Left Side	X	X	X	X	X	X	X	X
3	S501-840-* ①	Right Side	X	X	X	X	X	X	X	X
3	S501-924 ②	Right Side	X	X	X	X	X	X	X	X
3	S501-1003 ③	Right Side	X	X	X	X	X	X	X	X
4	S508-098	Back	X	X	X	X	X	X	X	X
4	S508-275 ②	Back	X	X	X	X	X	X	X	X
4	S508-395 ③	Back	X	X	X	X	X	X	X	X
5	S507-307-* ①	Top	X	X	X	X	X	X	X	X
5	S507-309 ②	Top	X	X	X	X	X	X	X	X
5	S507-310 ③	Top	X	X	X	X	X	X	X	X
6	S515-230-* ①	Upper Front	X	X	X	X	X	X	X	X
6	S514-231 ②	Upper Front	X	X	X	X	X	X	X	X
6	S514-232 ③	Upper Front	X	X	X	X	X	X	X	X
7	S553-522-* ①	Vent Option Door	X	X	X	X	X	X	X	X
7	S553-529-* ①	Vent Option Door with ERV	X	X	X	X	X	X	X	X
7	S553-525 ②	Vent Option Door	X	X	X	X	X	X	X	X
7	S553-527 ③	Vent Option Door	X	X	X	X	X	X	X	X
8	118-048-* ①	Condenser Grille	X	X	X	X	X	X	X	X
8	118-064 ②	Condenser Grille	X	X	X	X	X	X	X	X
8	118-072 ③	Condenser Grille	X	X	X	X	X	X	X	X
9	118-057-* ①	Side Grille	2	2	2	2	2	2	2	2
9	118-063 ②	Side Grille	2	2	2	2	2	2	2	2
9	118-073 ③	Side Grille	2	2	2	2	2	2	2	2
10	S521X503	Condenser Partition	X	X	X	X	X	X	X	X
10	S521-559 ③	Condenser Partition	X	X	X	X	X	X	X	X
11	S123-122	Drain Pan	X	X	X	X	X	X	X	X
11	S123-125 ②③	Drain Pan	X	X	X	X	X	X	X	X
12	121X463	Blower Partition	X	X	X	X	X	X	X	X
13	Control Panel Assy.	See Control Panel Assy. Drawing & Parts List	X	X	X	X	X	X	X	X
14	S132-277	Control Panel Cover (Inner)	X		X		X		X	
14	S132-278	Control Panel Cover (Inner)		X		X		X		X
15	S533-279-* ①	Control Panel Cover (Outer)	X	X	X	X	X	X	X	X
15	S533-275 ②	Control Panel Cover (Outer)	X	X	X	X	X	X	X	X
15	S533-276 ③	Control Panel Cover (Outer)	X	X	X	X	X	X	X	X
16	S153-218-* ①	Disconnect Access Door	X	X	X	X	X	X	X	X
16	S153-387 ②	Disconnect Access Door	X	X	X	X	X	X	X	X
16	S153-405 ③	Disconnect Access Door	X	X	X	X	X	X	X	X
17	125-024	Fan Shroud	X	X	X	X	X	X	X	X
17	125-058 ③	Fan Shroud	X	X	X	X	X	X	X	X
18	113-140	Bottom Mounting Bracket	X	X	X	X	X	X	X	X
19	137-209	Fill	X	X	X	X	X	X	X	X
20	BFAD-5	Fresh Air Damper Assembly	X	X	X	X	X	X	X	X
22	131X099	Filter Tray	X	X	X	X	X	X	X	X
23	105X877	Left Side Support	X	X	X	X	X	X	X	X
24	147-046	Left Evaporator Support	X	X	X	X	X	X	X	X
25	135-377	Raceway	2	2	2	2	2	2	2	2
26	S111X034	Outlet Air Frame Assembly	X	X	X	X	X	X	X	X
27	105X878	Right Side Support	X	X	X	X	X	X	X	X
28	S543-172-* ①	Right Side Cover Plate (Outer)	X	X	X	X	X	X	X	X
28	S543-176 ②	Right Side Cover Plate (Outer)	X	X	X	X	X	X	X	X
28	S543-177 ③	Right Side Cover Plate (Outer)	X	X	X	X	X	X	X	X
29	135-129	Heat Shield	X	X	X	X	X	X	X	X
30	113-150-* ①	Top Rain Flashing	X	X	X	X	X	X	X	X
30	113-359 ③	Top Rain Flashing	X	X	X	X	X	X	X	X
31	S536-804	Cond. Partition Block Off Plate	X	X	X	X	X	X	X	X
31	S536-881 ③	Cond. Partition Block Off Plate	X	X	X	X	X	X	X	X
32	S553-521-* ①	Filter Door Assembly	X	X	X	X	X	X	X	X
32	S553-526 ②	Filter Door Assembly	X	X	X	X	X	X	X	X
32	S553-528 ③	Filter Door Assembly	X	X	X	X	X	X	X	X
33	105-1302	Grommet Retainer	X	X	X	X	X	X	X	X
34	105-1324	Close Off Angle	X	X	X	X	X	X	X	X

① Exterior cabinet parts are manufactured with various paint color options. To ensure the proper paint color is received, please reference the following codes: Beige -X, White -1, Buckeye Gray -4, Desert Brown -5, Dark Bronze -8

② Exterior cabinet parts are manufactured from aluminum Code "A"

③ Exterior cabinet parts are manufactured from stainless steel Code "S"

CABINET COMPONENTS

Dwg No.	Part Number	Description	W60AA-A, B, E	W60AA-C, F	W60AADA, B	W60AADC	W72AB-A, B	W72AB-C, F
1	127-425	Lower Base	X	X	X	X	X	X
1	127-541 ③	Lower Base	X	X	X	X	X	X
2	S501-733-* ①	Left Side	X	X	X	X	X	X
2	S501-828 ②	Left Side	X	X	X	X	X	X
2	S501-1010 ③	Left Side	X	X	X	X	X	X
3	S501-841-* ①	Right Side	X	X	X	X	X	X
3	S501-928 ②	Right Side	X	X	X	X	X	X
3	S501-1011 ③	Right Side	X	X	X	X	X	X
4	S508-251	Back	X	X	X	X	X	X
4	S508-252 ②	Back	X	X	X	X	X	X
4	S508-396 ③	Back	X	X	X	X	X	X
5	S507-307-* ①	Top	X	X	X	X	X	X
5	S507-309 ②	Top	X	X	X	X	X	X
5	S507-310 ③	Top	X	X	X	X	X	X
6	S515-246-* ①	Upper Front	X	X	X	X	X	X
6	S515-280 ②	Upper Front	X	X	X	X	X	X
6	S515-253 ③	Upper Front	X	X	X	X	X	X
7	S553-522-* ①	Vent Option Door	X	X	X	X	X	X
7	S553-529-* ①	Vent Option Door with ERV	X	X	X	X	X	X
7	S553-525 ②	Vent Option Door	X	X	X	X	X	X
7	S553-527 ③	Vent Option Door	X	X	X	X	X	X
8	118-085-* ①	Condenser Grille	X	X	X	X	X	X
8	118-087 ②	Condenser Grille	X	X	X	X	X	X
8	118-089 ③	Condenser Grille	X	X	X	X	X	X
9	118-086-* ①	Side Grille	2	2	2	2	2	2
9	118-088 ②	Side Grille	2	2	2	2	2	2
9	118-090 ③	Side Grille	2	2	2	2	2	2
10	S521X503	Condenser Partition	X	X	X	X	X	X
10	S521-559 ③	Condenser Partition	X	X	X	X	X	X
11	S123-122	Drain Pan	X	X	X	X	X	X
11	S123-125 ②③	Drain Pan	X	X	X	X	X	X
12	121X463	Blower Partition	X	X	X	X	X	X
13	Control Panel Assy.	See Control Panel Assy. Drawing & Parts List	X	X	X	X	X	X
14	S132-277	Control Panel Cover (Inner)	X		X		X	
14	S132-278	Control Panel Cover (Inner)		X		X		X
15	S533-279-* ①	Control Panel Cover (Outer)	X	X	X	X	X	X
15	S533-275 ②	Control Panel Cover (Outer)	X	X	X	X	X	X
15	S533-276 ③	Control Panel Cover (Outer)	X	X	X	X	X	X
16	S153-218-* ①	Disconnect Access Door	X	X	X	X	X	X
16	S153-387 ②	Disconnect Access Door	X	X	X	X	X	X
16	S153-405 ③	Disconnect Access Door	X	X	X	X	X	X
17	125-070	Fan Shroud	X	X	X	X		
17	125-079 ③	Fan Shroud	X	X	X	X	X	X
17	125-084	Fan Shroud					X	X
18	113-140	Bottom Mounting Bracket	X	X	X	X	X	X
19	137-209	Fill	X	X	X	X	X	X
20	BFAD-5	Fresh Air Damper Assembly	X	X	X	X	X	X
22	131X099	Filter Tray	X	X	X	X	X	X
23	105X877	Left Side Support	X	X	X	X	X	X
24	147-046	Left Evaporator Support	X	X	X	X	X	X
25	135-377	Raceway	2	2	2	2	2	2
26	S111X034	Outlet Air Frame Assembly	X	X	X	X	X	X
27	105X878	Right Side Support	X	X	X	X	X	X
28	S543-172-* ①	Right Side Cover Plate (Outer)	X	X	X	X	X	X
28	S543-176 ②	Right Side Cover Plate (Outer)	X	X	X	X	X	X
28	S543-177 ③	Right Side Cover Plate (Outer)	X	X	X	X	X	X
29	135-129	Heat Shield	X	X	X	X	X	X
30	113-150-* ①	Top Rain Flashing	X	X	X	X	X	X
30	113-359 ③	Top Rain Flashing	X	X	X	X	X	X
31	S536-804	Cond. Partition Block Off Plate	X	X	X	X	X	X
31	S536-881 ③	Cond. Partition Block Off Plate	X	X	X	X	X	X
32	S553-521-* ①	Filter Door Assembly	X	X	X	X	X	X
32	S553-526 ②	Filter Door Assembly	X	X	X	X	X	X
32	S553-528 ③	Filter Door Assembly	X	X	X	X	X	X
33	105-1302	Grommet Retainer	X	X	X	X	X	X
34	105-1324	Close Off Angle	X	X	X	X	X	X

① Exterior cabinet parts are manufactured with various paint color options. To ensure the proper paint color is received, please reference the following codes: Beige -X, White -1, Buckeye Gray -4, Desert Brown -5, Dark Bronze -8

② Exterior cabinet parts are manufactured from aluminum Code "A"

③ Exterior cabinet parts are manufactured from stainless steel Code "S"

This table references drawing on page 2

This page intentionally left blank

FUNCTIONAL COMPONENTS

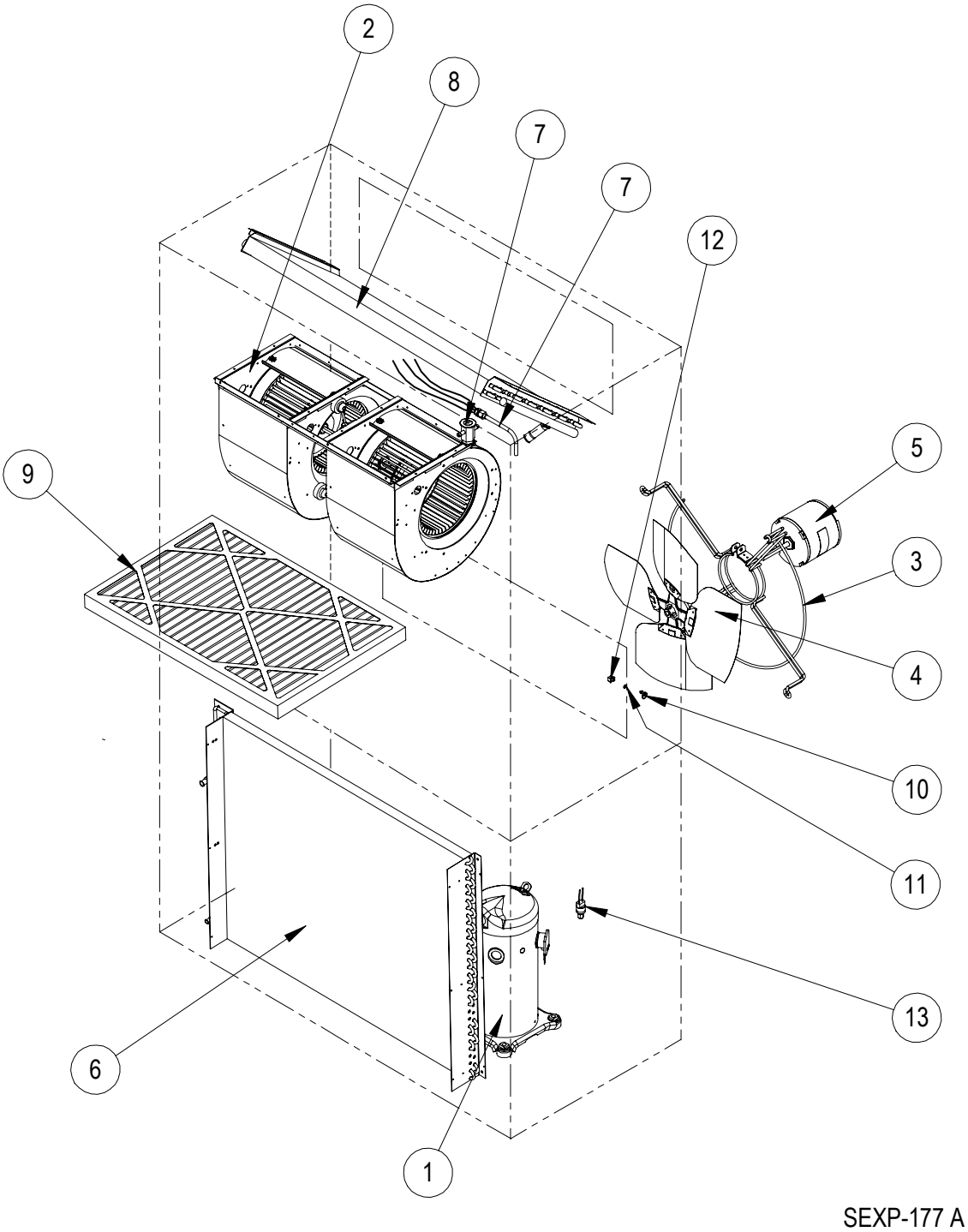

This drawing is referenced in tables on pages 7, 8 and 9

Dwg No.	Part Number	Description	W42AA-A	W42AA-B	W42AA-C	W42AA-E	W42AA-F	W42AADA	W42AADB	W42AADC
1	8000-349	Compressor	X					X		
1	8000-350	Compressor		X		X			X	
1	8000-351	Compressor			X		X			X
2	S900-320	Blower Assembly	X	X		X	X	X	X	
2	S900-321	Blower Assembly			X					X
3	8200-004	Fan Motor Mount	X	X	X	X	X	X	X	X
3	8200-051 ①	Stainless Steel Fan Motor Mount	X	X	X	X	X	X	X	X
4	5151-060	Fan Blade	X	X	X	X	X	X	X	X
4	5151C060 ①	Coated Fan Blade	X	X	X	X	X	X	X	X
5	8105-030	Condenser Motor			X					X
5	8105-066	Condenser Motor	X	X			X	X	X	
5	8105-039	Condenser Motor				X				
6	5051-200BX	Condenser Coil	X	X	X	X	X	X	X	X
6	5054-200BX	Condenser Coil - Coated	X	X	X	X	X	X	X	X
7	5651-236	Expansion Valve Assembly						X	X	X
7	800-0452	Distributor Assembly	X	X	X	X	X			
7	800-0424	Distributor Assembly						X	X	X
8	917-0261BX	Evaporator Coil						X	X	X
8	917-0270BX	Evaporator Coil - Coated						X	X	X
8	917-0255BX	Evaporator Coil	X	X	X	X	X			
8	917-0265BX	Evaporator Coil - Coated	X	X	X	X	X			
9	7004-016	Air Filter 1" Throw-Away (20x30x1)	X	X	X	X	X	X	X	X
9	7003-030	Air Filter 1" Washable (20x30x1)	X	X	X	X	X	X	X	X
9	7004-027	Air Filter 2" Pleated (20x30x2)	X	X	X	X	X	X	X	X
10	1171-022	1/4 Turn Fastener	X	X	X	X	X	X	X	X
11	1171-024	1/4 Turn Retainer	X	X	X	X	X	X	X	X
12	1171-023	1/4 Receptacle	X	X	X	X	X	X	X	X
13	8406-142	High Pressure Switch	X	X	X	X	X	X	X	X
13	8406-140	Low Pressure Switch	X	X	X	X	X	X	X	X
NS	5201-022	Filter Drier	X	X	X	X	X	X	X	X
NS	5650-042	Rev. Valve Solenoid, Red Casing (Ranco)						X	X	X
NS	5650-046	Rev. Valve Solenoid, Black Casing (San Hua)						X	X	X
NS	5650-051	Dehum. Valve 4-Pipe ½ x ½ with 24V Solenoid Coil						X	X	X
NS	5651-219	Check Valve						2	2	2
NS	CMA-28	Low Ambient Control (Flare) ②	X	X	X	X	X	X	X	X
NS	5451-024	Tubing Isolation Grommet	2	2	2	2	2	2	2	2
NS	6031-009	Coremax Valve Core	2	2	2	2	2	2	2	2
NS	1171-028	Filter Door Clip	2	2	2	2	2	2	2	2
NS	1171-057	Filter Door Screw	2	2	2	2	2	2	2	2
NS	1171-027	Filter Door Screw Retainer	2	2	2	2	2	2	2	2

NS – Not Shown
① – Used with stainless steel cabinet option
② – Optional on these models

FUNCTIONAL COMPONENTS

Dwg No.	Part Number	Description	W48AA-A	W48AA-B	W48AA-C	W48AA-E	W48AA-F	W48AADA	W48AADB	W48AADC	W60AA-A	W60AA-B	W60AA-C	W60AA-E	W60AA-F	W60AADA	W60AADB	W60AADC
1	8000-343	Compressor	X					X										
1	8000-344	Compressor		X		X			X									
1	8000-345	Compressor			X		X			X								
1	8000-415	Compressor									X					X		
1	8000-416	Compressor										X		X			X	
1	8000-417	Compressor											X		X			X
2	S900-320	Blower Assembly	X	X		X	X	X	X									
2	S900-321	Blower Assembly			X					X								
2	S900-185	Blower Assembly									X	X		X	X	X	X	
2	S900-186	Blower Assembly											X					X
3	8200-004	Fan Motor Mount	X	X	X	X	X	X	X	X	X	X	X	X	X	X	X	X
3	8200-051 ①	Stainless Steel Fan Motor Mount	X	X	X	X	X	X	X	X	X	X	X	X	X	X	X	X
4	5151-060	Fan Blade	X	X	X	X	X	X	X	X	X	X	X	X	X	X	X	X
4	5151C060 ①	Coated Fan Blade	X	X	X	X	X	X	X	X	X	X	X	X	X	X	X	X
5	8105-030	Condenser Motor			X					X			X					X
5	8105-066	Condenser Motor	X	X				X	X		X	X				X	X	
5	8105-039	Condenser Motor				X	X							X	X			
6	5051-199BX	Condenser Coil	X	X	X	X	X	X	X	X								
6	5054-199BX	Condenser Coil - Coated	X	X	X	X	X	X	X	X								
6	5051-198BX	Condenser Coil									X	X	X	X	X	X	X	X
6	5054-198BX	Condenser Coil - Coated									X	X	X	X	X	X	X	X
7	800-0451	Distributor Assembly	X	X	X	X	X											
7	800-0424	Distributor Assembly						X	X	X								
7	800-0453	Distributor Assembly									X	X	X	X	X			
7	800-0455	Distributor Assembly														X	X	X
7	5651-223	Expansion Valve						X	X	X						X	X	X
8	917-0256BX	Evaporator Coil	X	X	X	X	X											
8	917-0266BX	Evaporator Coil - Coated	X	X	X	X	X											
8	917-0257BX	Evaporator Coil									X	X	X	X	X			
8	917-0268BX	Evaporator Coil - Coated									X	X	X	X	X			
8	917-0261BX	Evaporator Coil						X	X	X								
8	917-0270BX	Evaporator Coil - Coated						X	X	X								
8	917-0259BX	Evaporator Coil														X	X	X
8	917-0267BX	Evaporator Coil - Coated														X	X	X
9	7004-016	Air Filter 1" Throw-Away (20x30x1)	X	X	X	X	X	X	X	X	X	X	X	X	X	X	X	X
9	7003-030	Air Filter 1" Washable (20x30x1)	X	X	X	X	X	X	X	X	X	X	X	X	X	X	X	X
9	7004-027	Air Filter 2" Pleated (20x30x2)	X	X	X	X	X	X	X	X	X	X	X	X	X	X	X	X
10	1171-022	1/4 Turn Fastener	X	X	X	X	X	X	X	X	X	X	X	X	X	X	X	X
11	1171-024	1/4 Turn Retainer	X	X	X	X	X	X	X	X	X	X	X	X	X	X	X	X
12	1171-023	1/4 Receptacle	X	X	X	X	X	X	X	X	X	X	X	X	X	X	X	X
13	8406-142	High Pressure Switch	X	X	X	X	X	X	X	X	X	X	X	X	X	X	X	X
13	8406-140	Low Pressure Switch	X	X	X	X	X	X	X	X	X	X	X	X	X	X	X	X
NS	5201-022	Filter Drier	X	X	X	X	X	X	X	X	X	X	X	X	X	X	X	X
NS	5650-042	Rev. Valve Solenoid, Red Casing (Ranco)						X	X	X						X	X	X
NS	5650-046	Rev. Valve Solenoid, Black Casing (San Hua)						X	X	X						X	X	X
NS	5650-051	Dehum. Valve 4-Pipe ½ x ½ with 24V Solenoid Coil						X	X	X						X	X	X
NS	CMA-28	Low Ambient Control (Flare) ②	X	X	X	X	X	X	X	X	X	X	X	X	X	X	X	X
NS	5651-219	Check Valve						2	2	2						2	2	2
NS	5451-024	Tubing Isolation Grommet	2	2	2	2	2	2	2	2	2	2	2	2	2	2	2	2
NS	6031-009	Coremax Valve Core	2	2	2	2	2	2	2	2	2	2	2	2	2	2	2	2
NS	8620-113	Compressor Crankcase Heater									X	X	X	X	X	X	X	X
NS	1171-028	Filter Door Clip	2	2	2	2	2	2	2	2	2	2	2	2	2	2	2	2
NS	1171-057	Filter Door Screw	2	2	2	2	2	2	2	2	2	2	2	2	2	2	2	2
NS	1171-027	Filter Door Screw Retainer	2	2	2	2	2	2	2	2	2	2	2	2	2	2	2	2

NS – Not Shown
① – Used with stainless steel cabinet option
② – Optional on these models

This table references drawing on page 6

Dwg No.	Part Number	Description	W72AB-A	W72AB-B	W72AB-C	W72AB-F
1	8000-403	Compressor	X			
1	8000-404	Compressor		X		
1	8000-405	Compressor			X	X
2	S900-348-001	Blower Assembly	X	X		X
2	S900-349-001	Blower Assembly			X	
3	8200-049	Fan Motor Mount	X	X	X	X
3	8200-052 ①	Stainless Steel Fan Motor Mount	X	X	X	X
4	5151-063	Fan Blade	X	X	X	X
4	5151C063 ①	Coated Fan Blade	X	X	X	X
5	8106-067	Condenser Motor			X	
5	8106-016	Condenser Motor	X	X		X
6	5051-197BX	Condenser Coil	X	X	X	X
6	5054-197BX	Condenser Coil - Coated	X	X	X	X
7	800-0454	Distributor Assembly	X	X	X	X
8	917-0347BX	Evaporator Coil	X	X	X	X
8	917-0348BX	Evaporator Coil - Coated	X	X	X	X
9	7004-016	Air Filter 1" Throw-Away (20x30x1)	X	X	X	X
9	7003-030	Air Filter 1" Washable (20x30x1)	X	X	X	X
9	7004-027	Air Filter 2" Pleated (20x30x2)	X	X	X	X
10	1171-022	1/4 Turn Fastener	X	X	X	X
11	1171-024	1/4 Turn Retainer	X	X	X	X
12	1171-023	1/4 Receptacle	X	X	X	X
NS	5201-022	Filter Drier	X	X	X	X
NS	CMA-28	Low Ambient Control (Flare) ②	X	X	X	X
NS	8406-142	High Pressure Switch	X	X	X	X
NS	8406-140	Low Pressure Switch	X	X	X	X
NS	5451-024	Tubing Isolation Grommet	2	2	2	2
NS	CMC-29	Freeze Thermostat Kit	X	X	X	X
NS	1171-028	Filter Door Clip	2	2	2	2
NS	1171-057	Filter Door Screw	2	2	2	2
NS	1171-027	Filter Door Screw Retainer	2	2	2	2
NS	6031-009	Coremax Valve Core	2	2	2	2

NS – Not Shown
① – Used with stainless steel cabinet option
② – Optional on these models

This table references drawing on page 6

CONTROL PANEL

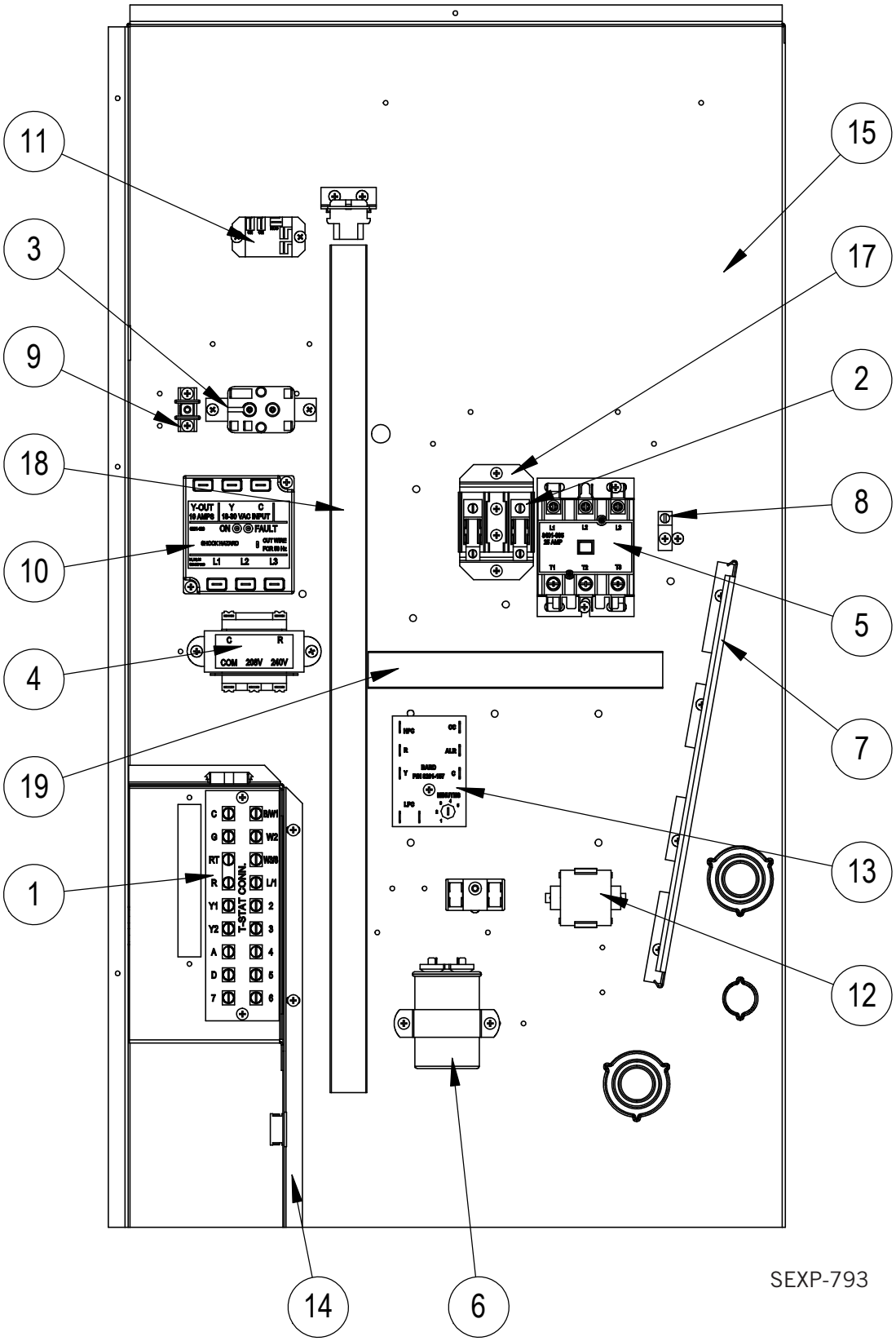

This drawing is referenced in tables on pages 11, 12 and 13

Dwg No.	Part Number	Description	W42AA-A	W42AA-B	W42AA-C	W42AA-E	W42AA-F	W48AA-A	W48AA-B	W48AA-C	W48AA-E	W48AA-F
1	8607-044	Low Voltage Terminal Strip	X	X	X	X	X	X	X	X	X	X
2	8607-013	Terminal Block 2 Pole					X					X
3	8201-130	Blower Control Relay	X				X	X				X
3	8201-009	Blower Control Relay		X		X			X		X	
3	8201-032	Blower Control Relay			X					X		
4	8407-068	Transformer	X	X		X	X	X	X		X	X
4	8407-042	Transformer			X					X		
5	8401-035	Compressor Contactor		X	X	X	X		X	X	X	X
5	8401-034	Compressor Contactor	X					X				
6	8552-005	Outdoor Motor Capacitor		X		X	X		X		X	X
6	8552-026	Outdoor Motor Capacitor			X					X		
6	8552-079	Compressor Capacitor	X									
6	8552-089	Compressor Capacitor						X				
7	135-122	Wire Shield	X	X	X	X	X	X	X	X	X	X
8	8611-006	Ground Terminal	X	X	X	X	X	X	X	X	X	X
9	8607-041	Park Terminal	X	X	X	2	2	X	X	X	2	2
10	8201-126	Phase Monitor		X	X	X	X		X	X	X	X
11	8201-130	Alarm Relay ①	X	X	X	X	X	X	X	X	X	X
12	8551-004	Start Device	X					X				
13	8201-157	Compressor Control Module	X	X	X	X	X	X	X	X	X	X
14	117X371	Low Voltage Box	X	X	X	X	X	X	X	X	X	X
15	117X373	Control Panel	X	X	X	X	X	X	X	X	X	X
16	8607-017	Terminal Block ①	X	X	X	X	X	X	X	X	X	X
17	113-601	Terminal Block Bracket					X					X
18	8611-140-2300	Cable Duct	X	X	X	X	X	X	X	X	X	X
19	8611-140-0800	Cable Duct	X	X	X	X	X	X	X	X	X	X
NS	3000-1222	Compressor Plug/Harness	X					X				
NS	3000-1231	Compressor Plug/Harness		X	X	X	X		X	X	X	X
NS	3003-008	Main Wire Harness	X					X				
NS	3003-009	Main Wire Harness		X	X	X			X	X	X	
NS	3003-013	Main Wire Harness					X					X
NS	3000-1494	Low Voltage Terminal Block Harness	X	X	X	X	X	X	X	X	X	X
NS	S910-2004	Complete Low Voltage Box Assembly (Sheet Metal, LVTS & Wire Harness)	X	X	X	X	X	X	X	X	X	X
NS	8615-040	Circuit Breaker 50A 2 Pole ②	X					X				
NS	8615-042	Circuit Breaker 35A 3 Pole ②		X		X			X		X	
NS	8615-067	Toggle Disconnect ②			X		X			X		X
NS	4095-185	Wiring Diagram	X					X				
NS	4095-262	Wiring Diagram		X					X			
NS	4095-362	Wiring Diagram			X					X		
NS	4095-501	Wiring Diagram				X					X	
NS	4095-637	Wiring Diagram					X					X

① Optional on these models.

② Circuit breakers listed are for units without electric heat "OZ" models. See heater replacement parts manual for units with electric heat.

NS – Not Shown

CONTROL PANEL

Dwg No.	Part Number	Description	W60AA-A	W60AA-B	W60AA-C	W60AA-E	W60AA-F
1	8607-044	Low Voltage Terminal Strip	X	X	X	X	X
2	8607-013	Terminal Block 2 Pole					X
3	8201-130	Blower Control Relay	X				X
3	8201-009	Blower Control Relay		X		X	
3	8201-032	Blower Control Relay			X		
4	8407-068	Transformer	X	X		X	X
4	8407-042	Transformer			X		
5	8401-035	Compressor Contactor		X	X	X	X
5	8401-034	Compressor Contactor	X				
6	8552-059	Compressor Capacitor	X				
6	8552-026	Outdoor Motor Capacitor			X		
6	8552-005	Outdoor Motor Capacitor		X		X	X
7	135-122	Wire Shield	X	X	X	X	X
8	8611-006	Ground Terminal	X	X	X	X	X
9	8607-041	Park Terminal	X	X	X	2	2
10	8201-126	Phase Monitor		X	X	X	X
11	8201-130	Alarm Relay ①	X	X	X	X	X
12	8551-004	Start Device (PTCR) ①	X				
13	8201-157	Compressor Control Module	X	X	X	X	X
14	117X371	Low Voltage Box	X	X	X	X	X
15	117X373	Control Panel	X	X	X	X	X
16	8607-017	Terminal Block ①	X	X	X	X	X
17	113-601	Terminal Block Bracket					X
18	8611-140-2300	Cable Duct	X	X	X	X	X
19	8611-140-0800	Cable Duct	X	X	X	X	X
NS	3000-1508	Compressor Plug/Harness	X				
NS	3000-1509	Compressor Plug/Harness		X	X	X	X
NS	3000-008	Main Wire Harness	X				
NS	3000-009	Main Wire Harness		X	X	X	
NS	3000-013	Main Wire Harness					X
NS	3000-1494	Low Voltage Terminal Block Harness	X	X	X	X	X
NS	S910-2004	Complete Low Voltage Box Assembly (Sheet Metal, LVTS & Wire Harness)	X	X	X	X	X
NS	8615-041	Circuit Breaker 60A 2 Pole ②	X				
NS	8615-043	Circuit Breaker 40A 3 Pole ②		X		X	
NS	8615-067	Toggle Disconnect ②			X		X
NS	4095-185	Wiring Diagram	X				
NS	4095-262	Wiring Diagram		X			
NS	4095-362	Wiring Diagram			X		
NS	4095-501	Wiring Diagram				X	
NS	4095-637	Wiring Diagram					X

① Optional on these models.

② Circuit breakers listed are for units without electric heat "OZ" models. See heater replacement parts manual for units with electric heat.

NS – Not Shown

This table references drawing on page 10

Dwg No.	Part Number	Description	W72AB-A	W72AB-B	W72AB-C	W72AB-F
1	8607-044	Low Voltage Terminal Strip	X	X	X	X
2	8607-013	Terminal Block 2 Pole				X
3	8201-130	Blower Control Relay	X	X	X	X
4	8407-068	Transformer	X	X		X
4	8407-042	Transformer			X	
5	8401-035	Compressor Contactor		X	X	X
5	8401-034	Compressor Contactor	X			
6	8552-097	Compressor Capacitor	X			
6	8552-004	Outdoor Motor Capacitor		X		X
6	8552-005	Outdoor Motor Capacitor			X	
7	135-122	Wire Shield	X	X	X	X
8	8611-006	Ground Terminal	X	X	X	X
10	8201-126	Phase Monitor		X	X	X
11	8201-130	Alarm Relay ①	X	X	X	X
12	8551-004	Start Device (PTCR) ①	X			
13	8201-157	Compressor Control Module	X	X	X	X
14	117X371	Low Voltage Box	X	X	X	X
15	117X373	Control Panel	X	X	X	X
16	8607-017	Terminal Block ①	X	X	X	X
17	113-601	Terminal Block Bracket				X
18	8611-140-2300	Cable Duct	X	X	X	X
19	8611-140-0800	Cable Duct	X	X	X	X
NS	3000-1510	Compressor Plug/Harness	X			
NS	3000-1511	Compressor Plug/Harness		X	X	X
NS	3003-014	Main Wire Harness	X			
NS	3003-015	Main Wire Harness		X	X	
NS	3003-016	Main Wire Harness				X
NS	3000-1494	Low Voltage Terminal Block Harness	X	X	X	X
NS	S910-2004	Complete Low Voltage Box Assembly (Sheet Metal, LVTS & Wire Harness)	X	X	X	X
NS	8607-042	Blower Speed Terminal	X	X	X	X
NS	3000-1512	High Voltage Blower Motor Harness (4 wires)	X	X	X	X
NS	3000-1513	**Low Voltage Blower Motor Harness (4 wires)**	X	X	X	X
NS	8615-041	Circuit Breaker 60A 2 Pole ②	X	X		
NS	8615-067	Toggle Disconnect ②			X	X
NS	4095-188	Wiring Diagram	X			
NS	4095-264	Wiring Diagram		X		
NS	4095-364	Wiring Diagram			X	
NS	4095-638	Wiring Diagram				X

① Optional on these models.

② Circuit breakers listed are for units without electric heat "OZ" models. See heater replacement parts manual for units with electric heat.

NS – Not Shown

This table references drawing on page 10

CONTROL PANEL – DEHUM. MODELS

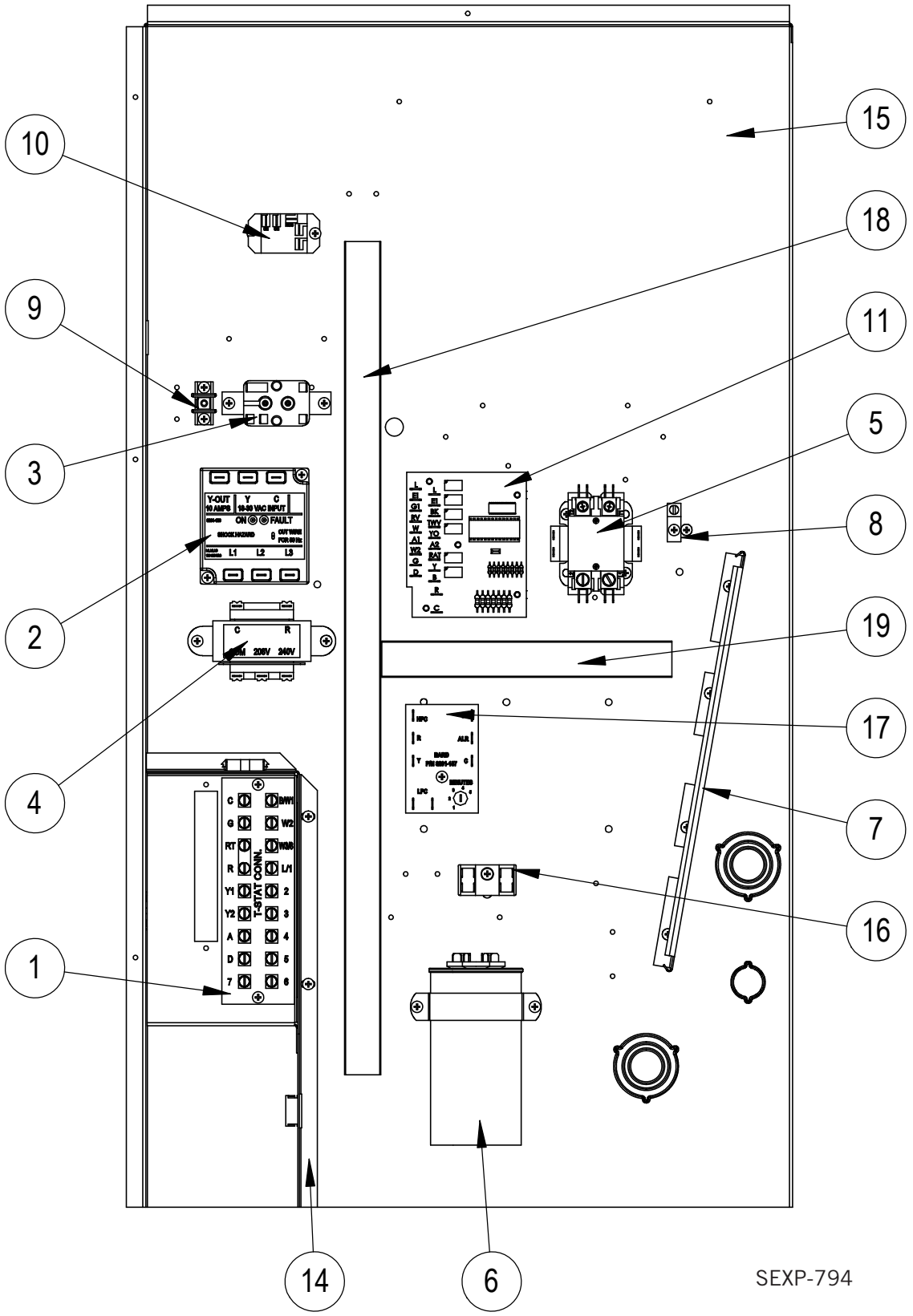

Dwg No.	Part Number	Description	W42AADA	W42AADB	W42AADC	W48AADA	W48AADB	W48AADC	W60AADA	W60AADB	W60AADC
1	8607-044	Low Voltage Terminal Strip	X	X	X	X	X	X	X	X	X
2	8201-126	Phase Monitor		X	X		X	X		X	X
3	8201-130	Blower Control Relay	X			X			X		
3	8201-009	Blower Control Relay		X			X			X	
3	8201-032	Blower Control Relay			X			X			X
4	8407-068	Transformer	X	X		X	X		X	X	
4	8407-042	Transformer			X			X			X
5	8401-035	Compressor Contactor		X	X		X	X		X	X
5	8401-034	Compressor Contactor	X			X			X		
6	8552-079	Compressor Capacitor 45/10 MFD-370V	X								
6	8552-005	Outdoor Motor Capacitor 10 MFD-370V		X			X			X	
6	8552-026	Outdoor Motor Capacitor 15 MFD-370V			X			X			X
6	8552-089	Compressor Capacitor 70/10 MFD-370V				X					
6	8552-059	Compressor Capacitor 80/10 MFD-440V							X		
7	135-122	Wire Shield	X	X	X	X	X	X	X	X	X
8	8611-006	Ground Terminal	X	X	X	X	X	X	X	X	X
9	8607-041	Park Terminal	X	X	X	X	X	X	X	X	X
10	8201-130	Relay	X	X	X	X	X	X	X	X	X
11	8201-113	Logic Board	X	X	X	X	X	X	X	X	X
14	117X371	Low Voltage Box	X	X	X	X	X	X	X	X	X
15	117X373	Control Panel	X	X	X	X	X	X	X	X	X
16	8607-017	Terminal Block (Optional)	X	X	X	X	X	X	X	X	X
17	8201-157	Compressor Control Module	X	X	X	X	X	X	X	X	X
18	8611-140-2300	Cable Duct	X	X	X	X	X	X	X	X	X
19	8611-140-0800	Cable Duct	X	X	X	X	X	X	X	X	X
NS	3000-1222	Compressor Plug/Harness	X			X					
NS	3000-1231	Compressor Plug/Harness		X	X		X	X			
NS	3000-1508	Compressor Plug/Harness							X		
NS	3000-1509	Compressor Plug/Harness								X	X
NS	3003-010	Main Wire Harness	X			X			X		
NS	3003-011	Main Wire Harness		X	X		X	X		X	X
NS	3000-1494	Low Voltage Terminal Block Harness	X	X	X	X	X	X	X	X	X
NS	S910-2004	Complete Low Voltage Box Assembly (Sheet Metal, LVTS & Wire Harness)	X	X	X	X	X	X	X	X	X
NS	8615-040	Circuit Breaker 50A 2 Pole ①	X			X					
NS	8615-042	Circuit Breaker 35A 3 Pole ①		X			X				
NS	8615-067	Toggle Disconnect ①			X			X			X
NS	8615-041	Circuit Breaker 60A 2 Pole ①							X		
NS	8615-044	Circuit Breaker 45A 3 Pole ①								X	
NS	4095-186	Wiring Diagram	X			X			X		
NS	4095-263	Wiring Diagram		X			X			X	
NS	4095-363	Wiring Diagram			X			X			X

① Circuit breakers listed are for units without electric heat "OZ" models. See heater replacement parts manual for units with electric heat.

NS – Not Shown

BLOWER ASSEMBLY

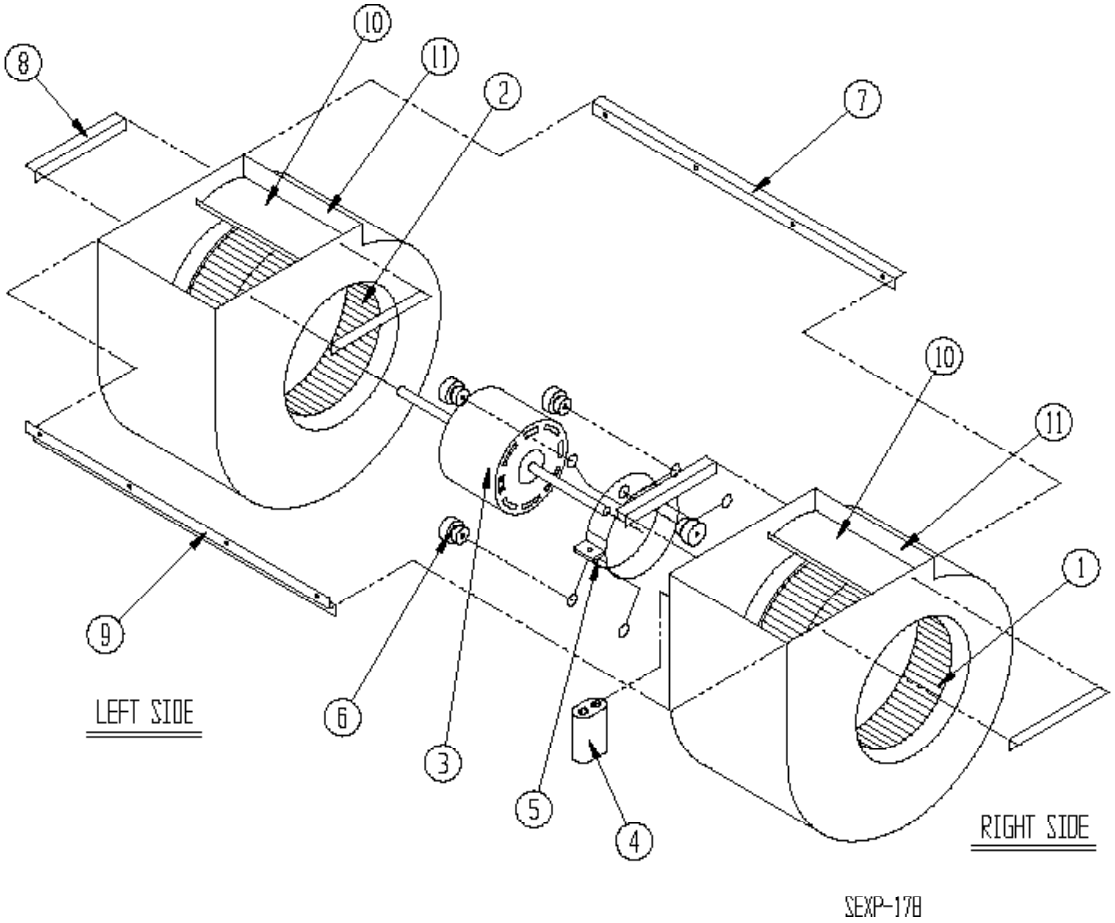

Dwg No.	Part Number	Description	S900-320	S900-321	S900-185	S900-186
1	5152-011	10 Inch Wheel (CW)			X	X
1	5152-057	9 Inch Wheel (CW)	X	X		
2	5152-012	10 Inch Wheel (CW)			X	X
2	5152-058	9 Inch Wheel (CW)	X	X		
3	8105-061	Blower Motor (230/208)	X			
3	8105-062	Blower Motor (460)		X		
3	8106-046	Blower Motor (230/208)			X	
3	8106-025	Blower Motor (460)				X
4	8552-091	Capacitor	X	X	X	
4	8552-005	Capacitor				X
5	8200-040	Motor Mount	X	X	X	X
6	5451-011	Grommets	6	6	6	6
7	105-881	Back Brace	X	X	X	X
8	105-880	Side Angle	4	4	4	4
9	103-389	Front Brace	X	X	X	X
10	151-101	Housing	2	2	2	2
11	144-166	Diffuser	2	2	2	2

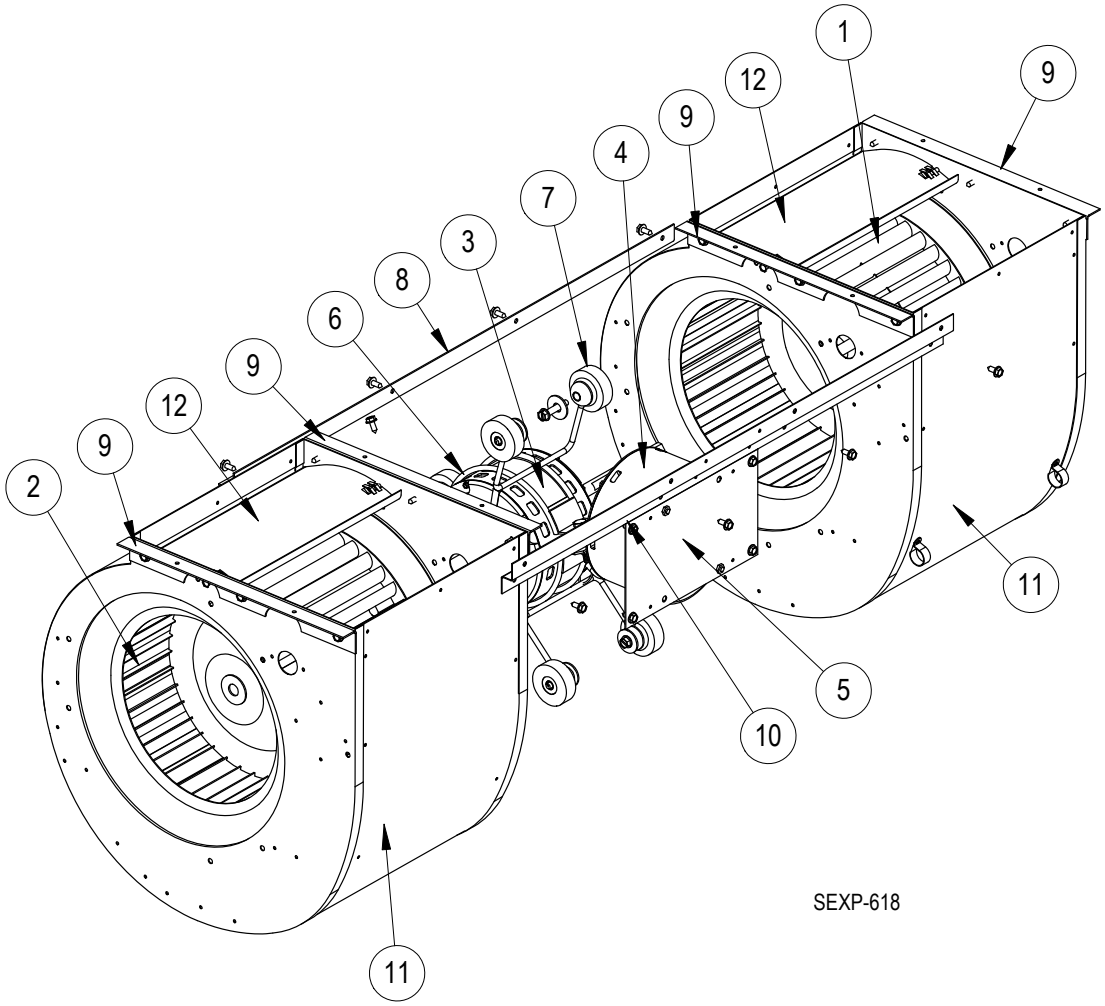

Dwg. No.	Part Number	Description	S900-348-001	S900-349-001
1	5152-011	10-Inch Wheel (CW)	X	X
2	5152-012	10-Inch Wheel (CCW)	X	X
3	8107-019-0135	3/4 HP Programmed Motor w/Control	X	
3	8107-026-0136	3/4 HP Programmed Motor w/Control		X
5	112-580	Blower Motor Control Bracket	X	X
6	8200-040	Motor Mount	X	X
7	5451-011	Grommets	6	6
8	105-881	Back Brace	X	X
9	105-880	Side Angle	4	4
10	103-389	Front Brace	X	X
11	151-101	Housing	2	2
12	144-166	Diffuser	2	2