REPLACEMENT PARTS MANUAL

PACKAGE AIR CONDITIONER

Models:

PA13241-A **PA13301-A**
PA13361-A **PA13361-B**

General Notes

- Revised and/or additional pages may be issued from time to time.
- A complete and current manual consists of pages shown in the following contents section.

Important

- Contact the installing and/or local Bard distributor for all parts requirements. Make sure you have the complete model and serial number available from the unit rating plates.

Contents

Description	Page
Cabinet Components	
◆ Exploded View	2
◆ Usage List	3
Functional Components	
◆ Exploded View	4
◆ Usage List	5
Control Panels	
◆ Exploded View 1-Phase	6
◆ Usage List 1-Phase	7
◆ Exploded View 3-Phase	8
◆ Usage List 3-Phase	9

Bard SINCE 1914
CLIMATE CONTROL SOLUTIONS

Bard Manufacturing Company, Inc.
Bryan, Ohio 43506

Since 1914...Moving, ahead just as planned.

Manual: 2110-216A
Supersedes: 2110-216
File: Tab 10
Date: 08-20-07

CABINET COMPONENTS

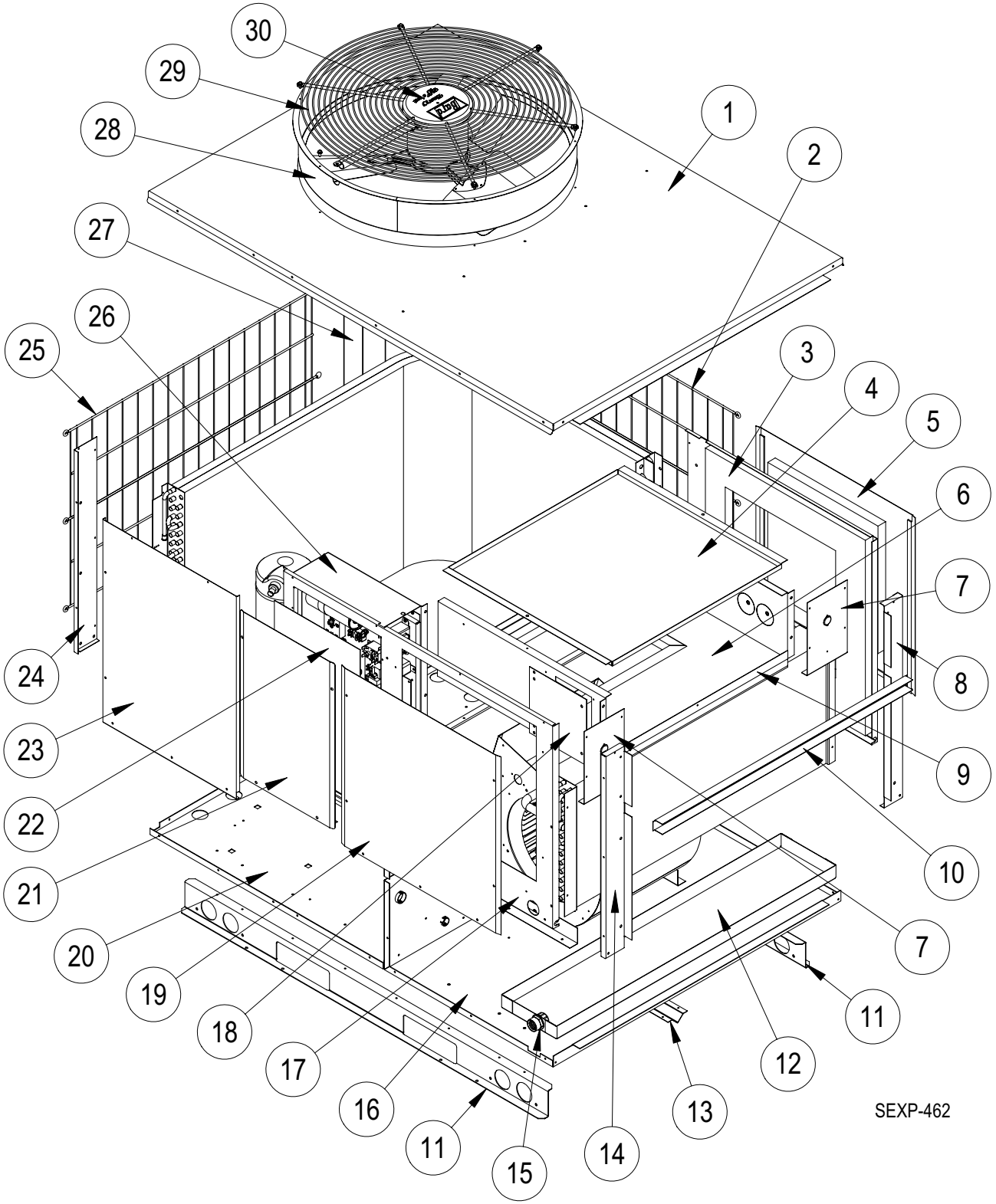

Drawing No.	Part No.	Description	PA13241-A	PA13301-A	PA13361-A	PA13361-B
1	507-252-X	Top	X	X	X	X
2	7051-052	Side Condenser Grille	X	X	X	X
3	501-468-X	Left Side	X	X	X	X
4	134-017	Heat Strip Shield	X	X	X	X
5	S553-394-X	Heater Access Door	X	X	X	X
6	521-397	Blower Partition	X	X	X	X
7	137-504	Blower Partition Side Fill	2	2	2	2
8	549-101-X	Left Rear Corner	X	X	X	X
9	104-1174	Plenum Support Angle	X	X	X	X
10	165-589-X	Plenum Channel	X	X	X	X
11	102-460	Base Rail	2	2	2	2
12	S123-113	Drain Pan with Fitting	X	X	X	X
13	140-321-X	Center Base Rail	X	X	X	X
14	549-102-X	Right Rear Corner	X	X	X	X
15	6094-003	Drain Pan Fitting	X	X	X	X
16	S127-347-X	Indoor Base	X	X	X	X
17	S501-467-X	Right Side	X	X	X	X
18	142-017	0KW Cover Plate	X	X	X	X
19	S553-402-X	Blower Access Door	X	X	X	X
20	127-346-X	Outdoor Base	X	X	X	X
21	S153-395-X	Outer Control Panel Door	X	X	X	X
22	S153-397	Inner Control Panel Door	X	X	X	X
23	S153-396-X	Compressor Access Door	X	X	X	X
24	149-100-X	Right Front Corner	X	X	X	X
25	7051-051	Front Condenser Grille	X	X	X	X
26	Control Panel Assembly - See Drawing		X	X	X	X
27	149-099-X	Left Front Corner	X	X	X	X
28	S167-014-X	Fan Venturi	X	X	X	X
29	7051-018	Fan and Motor Mount Grille	X	X	X	X
30	5252-009	Bard Nameplate	X	X	X	X

FUNCTIONAL COMPONENTS

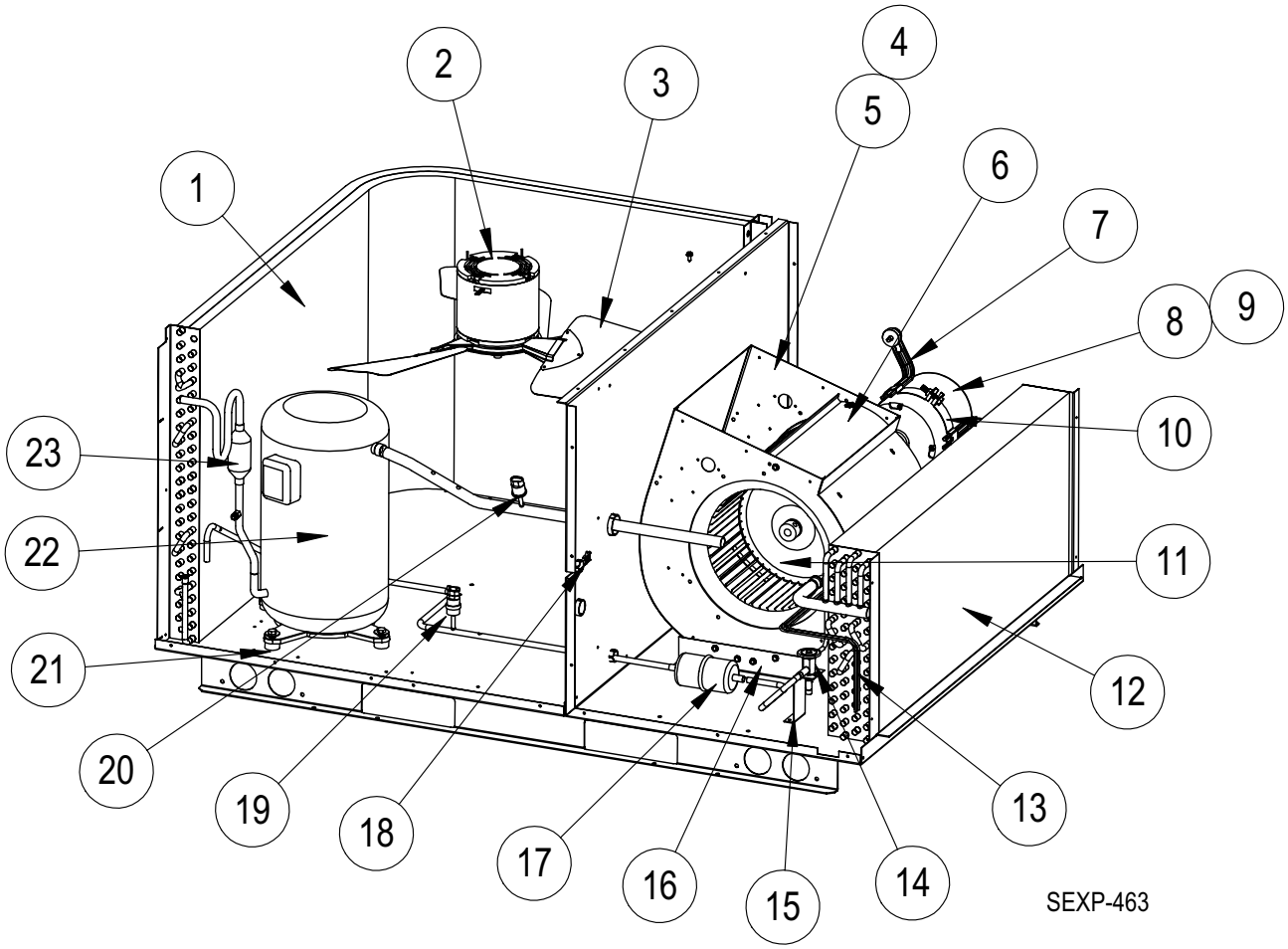

Drawing No.	Part No.	Description	PA13241-A	PA13301-A	PA13361-A	PA13361-B
1	5051-134BX	Condenser Coil	X			
1	5051-135BX			X	X	X
2	8102-013	Outdoor Motor	X	X	X	X
3	5151-056	Fan Blade	X	X	X	X
4	900-239-001	Complete Blower Assembly	X			
4	900-240-003			X		
4	900-240-002				X	X
5	151-097	Blower Housing	X	X	X	X
6	144-130	Diffuser	X	X	X	X
7	8620-034	Motor Mount Kit	X	X	X	X
8	8105-045-0016	Programmed 1/3 HP Motor w/Control	X			
8	8106-035-0020	Programmed 1/2 HP Motor w/Control		X		
8	8106-035-0021	Programmed 1/2 HP Motor w/Control			X	X
9	C8105-045-0016	Programmed 1/3 HP Control Only	X			
9	C8105-035-0020	Programmed 1/2 HP Control Only		X		
9	C8105-035-0021	Programmed 1/2 HP Control Only			X	X
10	8620-034	Motor Mount Kit	X	X	X	X
11	5152-049	Blower Wheel	X	X	X	X
12	5060-127BX	Evaporator Coil	X			
12	5060-126BX			X	X	X
13	S800-0350	Cooling Distributor 2 Outlet	X			
13	S800-0349	Cooling Distributor 4 Outlet		X	X	X
14	5651-181	Expansion Valve	X	X	X	X
15	113-325	Cooling TXV Mounting Bracket	X	X	X	X
16	104-1043	Blower Leg	2	2	2	2
17	5201-001	Filter Drier	X	X	X	X
18	3000-1245	6 Pin Plug for Heater Package	X	X	X	X
19	1804-0327	High Pressure Switch	X	X	X	X
20	1804-0338	Low Pressure Switch	X	X	X	X
21	1012-217	Cage Nut	4	4	4	4
22	8000-279	Compressor	X			
22	8000-280			X		
22	8000-281				X	
22	8000-282					X
23	5220-010	Discharge Muffler	N/A	X	X	X

N/A - Not Applicable

Reference SEXP-463

CONTROL PANEL — 1-PHASE

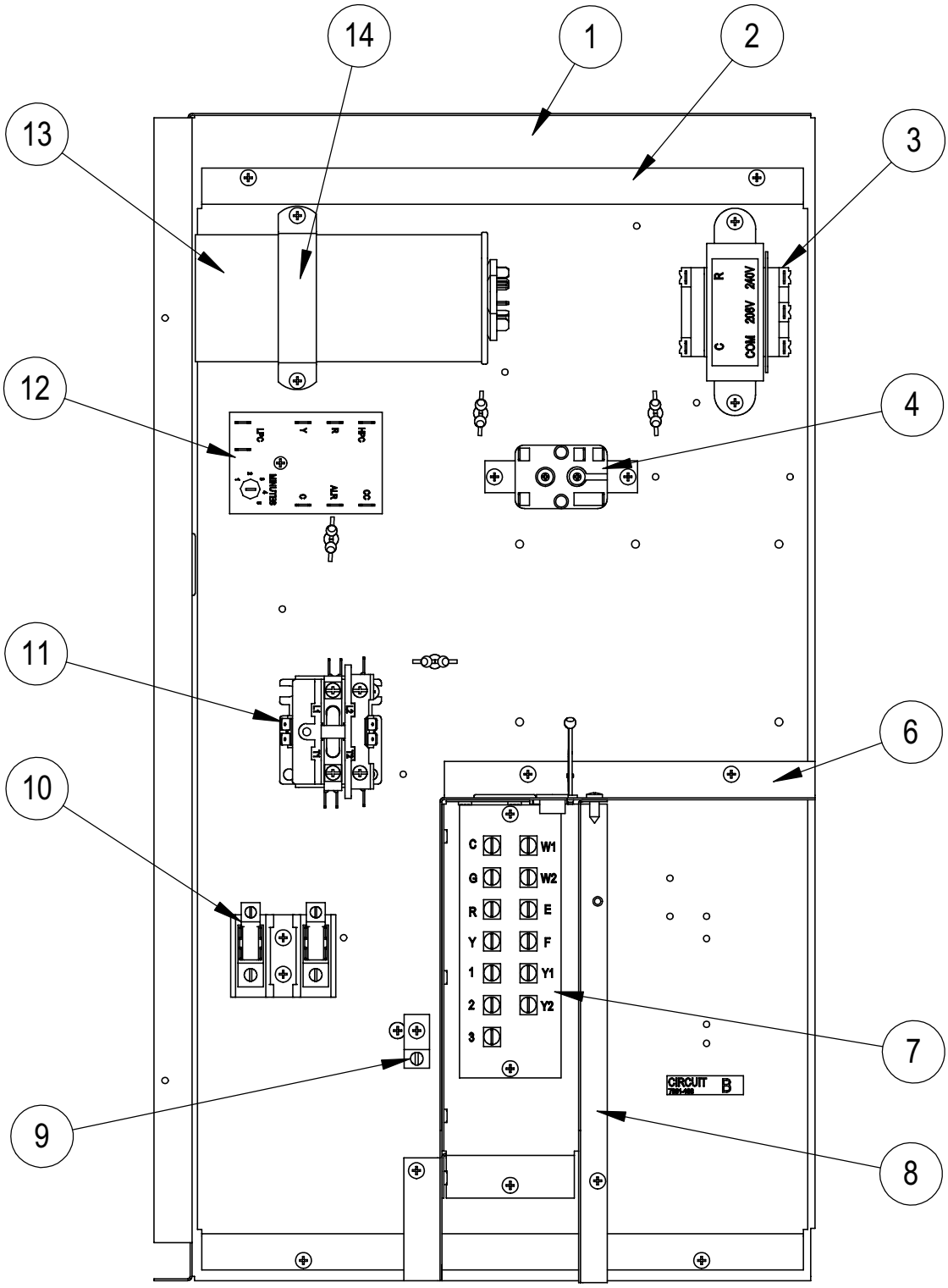

SEXP-466

Drawing No.	Part No.	Description	PA13241-A	PA13301-A	PA13361-A
1	117-262	Control Panel	X	X	X
2	117-261	Control Mounting Plate	X	X	X
3	8407-035	Transformer	X	X	X
4	8201-062	Relay	X	X	X
6	117-263	Low Voltage Box Assembly	X	X	X
7	8607-024	Terminal Strip	X	X	X
8	135-218	Terminal Shield	X	X	X
9	8611-006	Ground Terminal	X	X	X
10	8607-013	Terminal Block	X	X	X
11	8401-007	Contactor	X	X	X
12	8201-088	Compressor Control Module	X	X	X
13	8552-047	Capacitor 30/5 MFD 370V	X		
13	8552-048	Capacitor 35/5 MFD 370V		X	
13	8552-050	Capacitor 40/5 MFD 370V			X
14	8550-007	Capacitor Bracket	X	X	
14	8550-008				X
NS	4109A100	Wiring Diagram	X	X	X
NS	4109A101	Ladder Diagram	X	X	X

NS = Not Shown

Reference SEXP-466

CONTROL PANEL — 3-PHASE

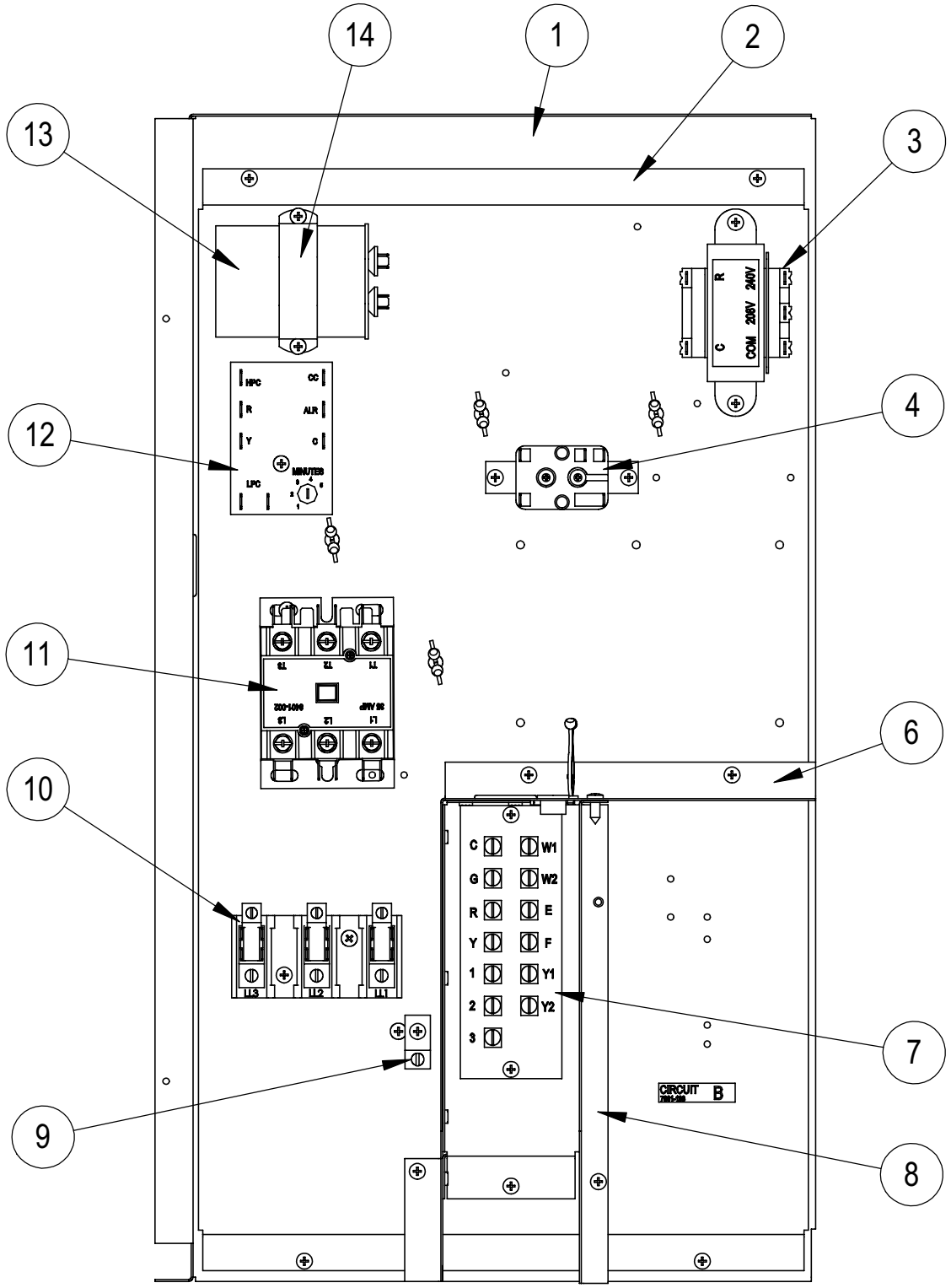

SEXP-468

Drawing No.	Part No.	Description	PA13361-B
1	117-262	Control Panel	X
2	117-261	Control Mounting Plate	X
3	8407-035	Transformer	X
4	8201-062	Relay	X
6	117-263	Low Voltage Box Assembly	X
7	8607-024	Terminal Strip	X
8	135-218	Terminal Shield	X
9	8611-006	Ground Terminal	X
10	8607-014	Terminal Block	X
11	8401-002	Contactor	X
12	8201-088	Compressor Control Module	X
13	8552-002	Capacitor 5 MFD 370V	X
14	8550-003	Capacitor Bracket	X
NS	4109A200	Wiring Diagram	X
NS	4109A201	Ladder Diagram	X

NS = Not Shown

Reference SEXP-468