REPLACEMENT PARTS MANUAL

PACKAGE HEAT PUMP

Models:

PH11242 PH12241
PH11301 PH1230
PH11361 PH1236

General Notes

- Revised and/or additional pages may be issued from time to time.
- A complete and current manual consists of pages shown in the following contents section.

Important

- Contact the installing and/or local Bard distributor for all parts requirements. Make sure you have the complete model and serial number available from the unit rating plates.

Contents

Description — Page

Cabinet Components
- Exploded View 1
- Usage List 2

Functional Components
- Exploded View 3
- Usage List 4
- Usage List 5
- Blank Page 6

Control Panel
- Exploded View 7
- Usage List 8
- Exploded View 9
- Usage List 10
- Exploded View 11
- Usage List 12
- Exploded View 13
- Usage List 14

CLIMATE CONTROL SOLUTIONS

BARD MANUFACTURING COMPANY
Bryan, Ohio 43506

Since 1914...Moving, ahead just as planned.

Manual: 2110-260F
Supersedes: 2110-260E
File: Tab 11
Date: 09-07-04

CABINET COMPONENTS

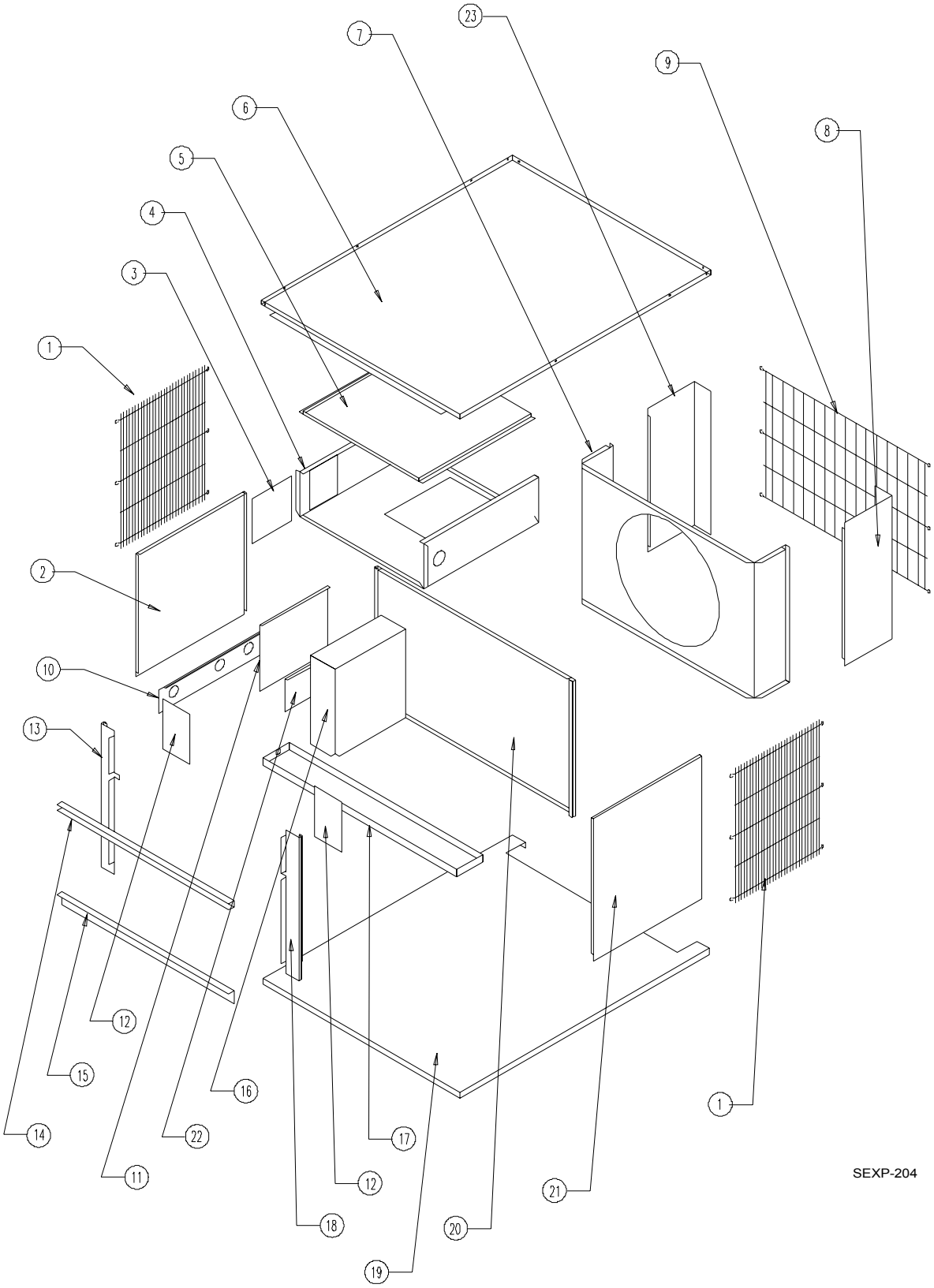

Drawing No.	Part No.	Description	PH11242	PH11301	PH11361	PH12241	PH1230	PH1236
1	7051-015	Inlet Grille	2	2	2	2	2	2
2	501-133-X	Left Side	X	X	X	X	X	X
3	142-017	Cover Plate – 0KW	X	X	X	X	X	X
4	520-284	Blower Partition	X					
4	520-286	Blower Partition		X	X			
4	520-330	Blower Partition				X	X	X
5	134-017	Heat Strip Shield	X	X	X	X	X	X
6	507-168-X	Top	X	X	X	X	X	X
7	125-012-X	Fan Shroud	X	X	X	X	X	X
8	149-085-X	Right Rear Corner	X	X	X	X	X	X
9	7051-001	Condenser Grille	X	X	X	X	X	X
10	557-028-X	Entrance Panel	X	X	X	X	X	X
11	133-035-X	Control Panel Cover	X	X	X	X	X	X
12	136-312	Blower Fill Plates	X	X	X	X	X	X
13	549-082-X	Left Front Cover	X	X	X	X	X	X
14	165-552-X	Plenum Channel	X	X	X	X	X	X
15	105-521-X	Plenum Angle	X	X	X	X	X	X
16	Control Panel Assembly	See Control Panel Drawing & Parts List	X	X	X	X	X	X
17	123-088-X	Drain Pan	X	X	X	X	X	X
18	549-081-X	Right Front Corner	X	X	X	X	X	X
19	527-255-X	Base	X	X	X	X	X	X
20	521-283-X	Compressor Partition	X	X	X	X	X	X
21	501-132-X	Right Side	X	X	X	X	X	X
22	142-044	Entrance Cover	X	X	X	X	X	X
23	149-086-X	Left Rear Corner	X	X	X	X	X	X

FUNCTIONAL COMPONENTS

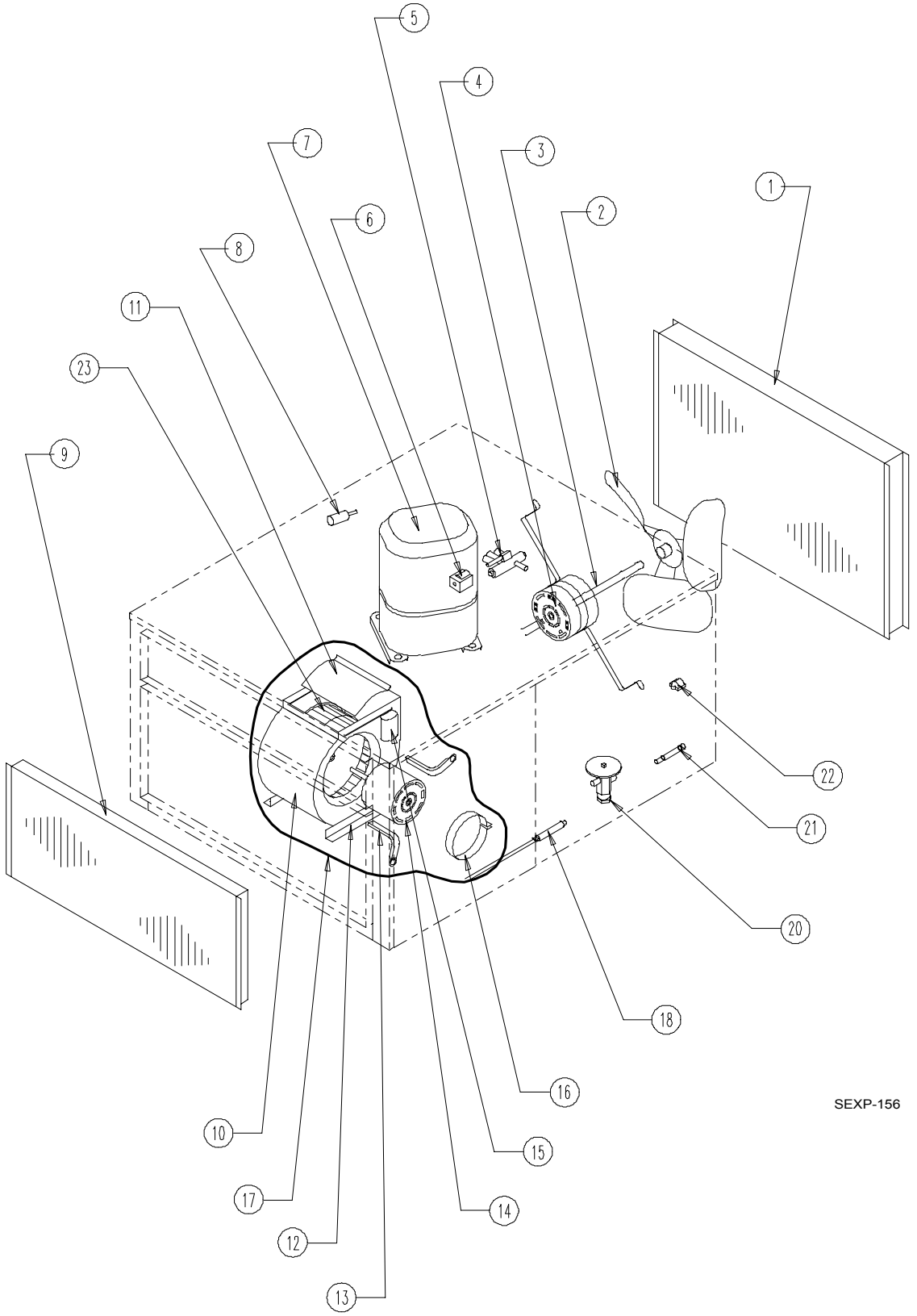

This drawing to be used as reference for Pages 4 and 5.

Drawing No.	Part No.	Description	PH11242	PH11301	PH11361	PH11361-B	PH11361-C
1	5051-106	Condenser Coil	X	X	X	X	X
2	5151-034	Fan Blade	X				
2	5151-004	Fan Blade		X	X	X	X
3	8200-001	Motor Mount	X	X	X	X	X
4	8103-014	Motor					X
4	8103-016	Motor	X				
4	8103-019	Motor		X	X	X	
5	5650-038	Reversing Valve	X	X	X	X	X
6	5650-042	Rev. Valve Solenoid, Red Casing (Ranco)	X	X	X	X	X
6	5650-043	Rev. Valve Solenoid, Black Casing (Wilspec)					
7	8000-254	Compressor ZR22KC-PFV-230	X				
7	8000-172	Compressor ZR28K3-PFV-230		X			
7	8000-175	Compressor ZR34K3-PFV-230			X		
7	8000-163	Compressor ZR34K3-TF5-230				X	
7	8000-164	Compressor ZR34K3-TFD-230					X
8	8406-040	High Pressure Switch	X	X	X	X	X
9	5060-052	Evaporator Coil	X				
9	5060-088	Evaporator Coil		X	X	X	X
10	151-088	Blower Housing	X				
10	151-101	Blower Housing		X	X	X	X
11	144-156	Blower Diffuser	X				
11	144-166	Blower Diffuser		X	X	X	X
12	104-787	Blower Angle	X	X	X	X	X
13	8620-034	Motor Mount Arm	X	X	X	X	X
14	8105-016	Motor					X
14	8105-032	Motor	X				
14	8105-024	Motor		X	X	X	
15	8552-002	Capacitor 5/370	X	X	X	X	X
16	8620-034	Motor Mount Band	X	X	X	X	X
17	900-146	Complete Blower Assembly	X				
17	900-145	Complete Blower Assembly		X	X	X	
17	900-207	Complete Blower Assembly					X
18	5625-025	Cooling Flow Control Assembly	X				
18	5625-026	Cooling Flow Control Assembly		X	X	X	
18	5625-027	Cooling Flow Control Assembly					X
20	5651-138	Expansion Valve – Heating	X	X			
20	5651-102	Expansion Valve – Heating			X	X	X
22	8620-095	Defrost Sensor	X	X	X	X	X
23	5152-065	Blower Wheel	X				
23	5152-005	Blower Wheel		X	X	X	X
NS	5625-013	Heating Distributor	X	X	X	X	X

NS = Not Shown

Refer to drawing on Page 3

FUNCTIONAL COMPONENTS

Drawing No.	Part No.	Description	PH12241	PH1230	PH1236	PH1236-B
1	5051-106	Condenser Coil	X	X		
1	5051-108	Condenser Coil			X	X
2	5151-034	Fan Blade	X			
2	5151-004	Fan Blade		X	X	X
3	8200-001	Motor Mount	X	X	X	X
4	8103-016	Motor	X			
4	8103-019	Motor		X	X	X
5	5650-038	Reversing Valve	X	X	X	X
6	5650-042	Rev. Valve Solenoid, Red Casing (Ranco)	X	X	X	X
6	5650-043	Rev. Valve Solenoid, Black Casing (Wilspec)				
7	8000-254	Compressor ZR22KCPFV-230	X			
7	8000-172	Compressor ZR28K3-PFV-230		X		
7	8000-175	Compressor ZR34K3-PFV-230			X	
7	8000-163	Compressor ZR34K3-TF5-230				X
8	8406-040	High Pressure Switch	X	X	X	X
9	5060-052	Evaporator Coil	X			
9	5060-100	Evaporator Coil		X	X	X
10	151-097	Blower Housing	X	X	X	X
11	144-130	Blower Diffuser	X	X	X	X
12	104-787	Blower Angle	X	X	X	X
13	8620-034	Motor Mount Kit	3	3	3	3
14	8106-035-0020	Motor		X		
14	8105-045-0016	Motor	X			
14	8106-035-0021	Motor			X	X
15	8552-002	Capacitor 5/370	X	X	X	X
16	8620-034	Motor Mount Kit	X	X	X	X
17	900-239-001	Complete Blower Assembly	X			
17	900-240-003	Complete Blower Assembly		X		
17	900-240-002	Complete Blower Assembly			X	X
18	5625-025	Cooling Flow Control Assembly	X			
18	5625-026	Cooling Flow Control Assembly		X		
18	5625-027	Cooling Flow Control Assembly			X	X
20	5651-138	Expansion Valve – Heating	X	X		
20	5651-102	Expansion Valve – Heating			X	X
22	8620-095	Defrost Sensor	X	X	X	X
23	5152-049	Blower Wheel	X	X	X	X
NS	5625-013	Heating Distributor	X	X	X	X

NS = Not Shown

Refer to drawing on Page 3

This page has been left blank intentionally.

CONTROL PANEL

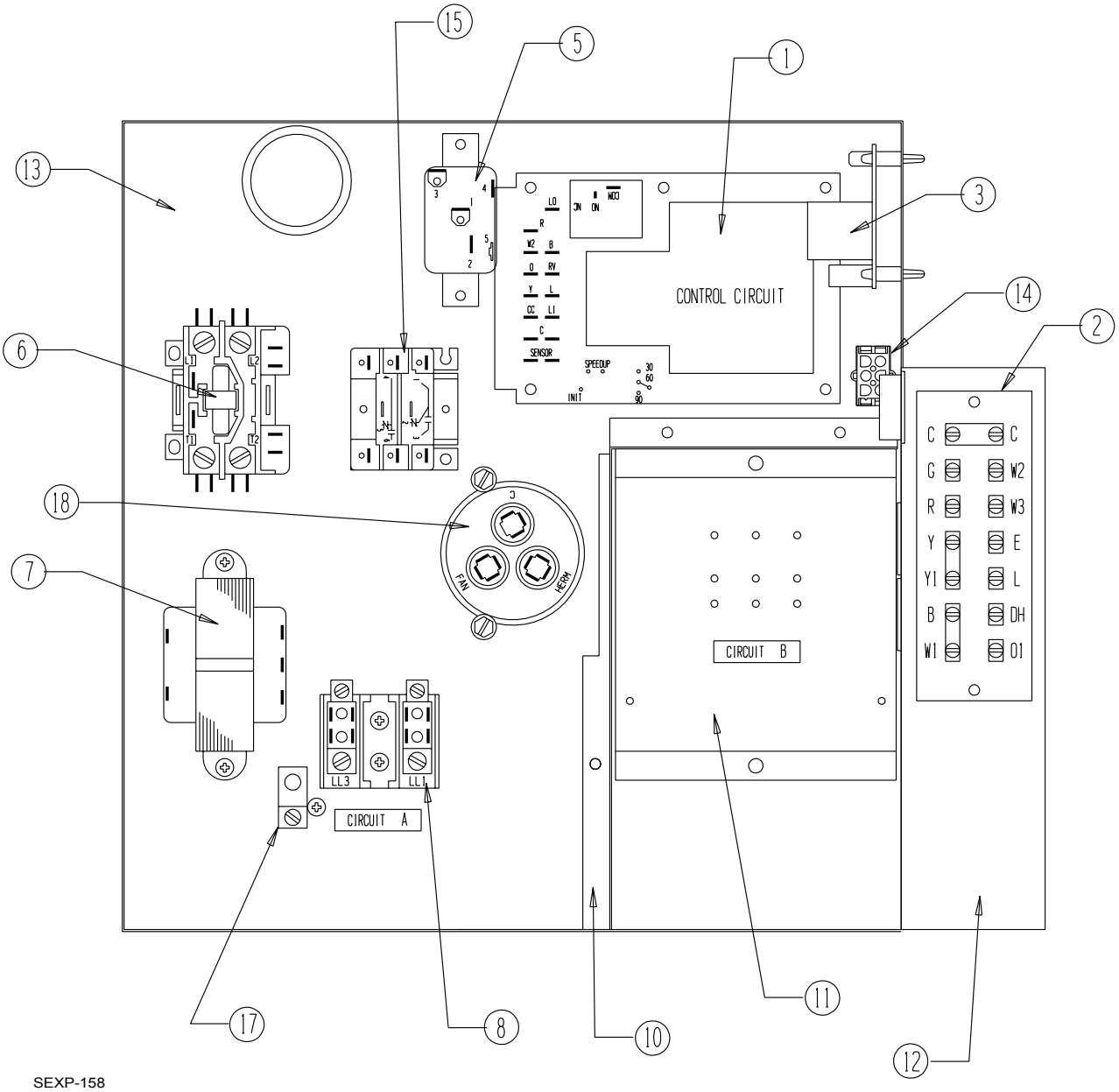

SEXP-158

Drawing No.	Part No.	Description	PH11242	PH11301	PH11361
1	8201-069	Heat Pump Control	X	X	X
2	8607-025	Terminal Strip	X	X	X
3	8201-056	Blower Control	X	X	X
5	8201-008	Defrost Heat Relay	X	X	X
6	8401-007	Contactor	X	X	X
7	8407-035	Transformer	X	X	X
8	8607-013	Terminal Block	X	X	X
10	116-149	Control Panel Partition	X	X	X
11	116-150	Terminal Block Shield	X	X	X
12	116-148	Low Voltage Box	X	X	X
13	516Y141	Control Panel	X	X	X
14	3000-976	Wire Assembly	X	X	
14	3000-974	Wire Assembly			X
15	8201-013	Emergency Heat Relay			X
17	8611-006	Ground Terminal	X	X	X
18	8552-048	Capacitor 35/5-370	X		
18	8552-052	Capacitor 45/5-370		X	
18	8552-056	Capacitor 50/10-440			
NS	4098-113	Wiring Diagram	X		
NS	4098-121	Wiring Diagram		X	X

NS = Not Shown

CONTROL PANEL

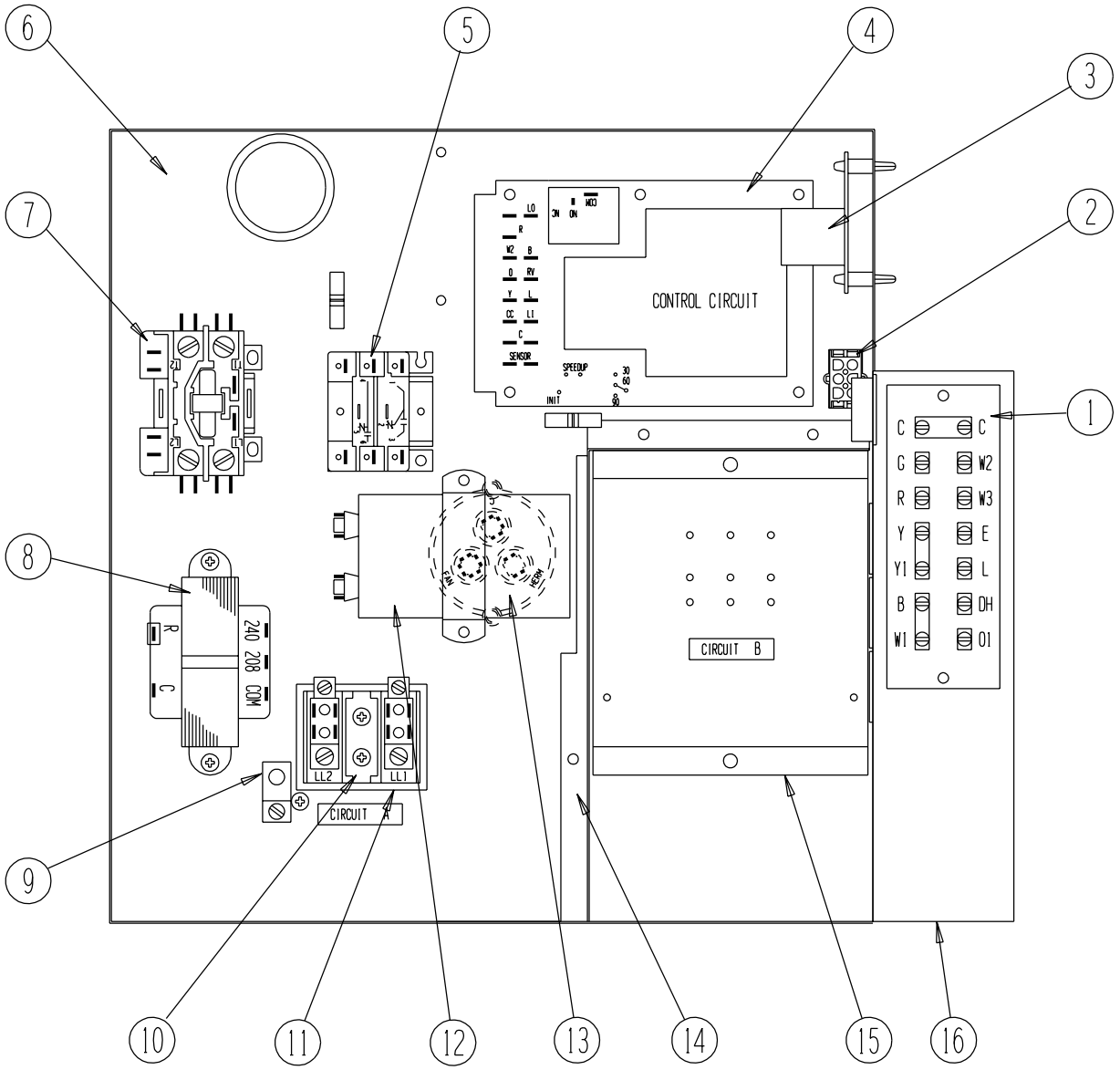

SEXP-202

Drawing No.	Part No.	Description	PH11361-B	PH11361-C
1	8607-025	Terminal Strip	X	X
2	3000-100	wire Assembly	X	X
3	8201-056	Solid State Blower Control	X	
3	8201-032	Blower Relay		X
4	8201-069	Heat Control Pump	X	X
5	8201-013	Relay	X	X
6	516-147	Control Panel	X	X
7	8401-002	Contactor	X	X
8	8407-035	Transformer	X	
8	8407-042	Transformer		X
9	8611-006	Ground Terminal	X	X
10	8607-014	Terminal Block	X	X
11	8607-015	Phenolic Insulator		X
12	8552-002	Capacitor 5-370	X	X
14	116-149	Control Panel Partition	X	X
15	116-150	Terminal Block Support	X	X
16	116-148	Low Voltage Box	X	X
NS	4065-211	Wiring Diagram	X	
NS	4065-311	Wiring Diagram		X

NS = Not Shown

CONTROL PANEL

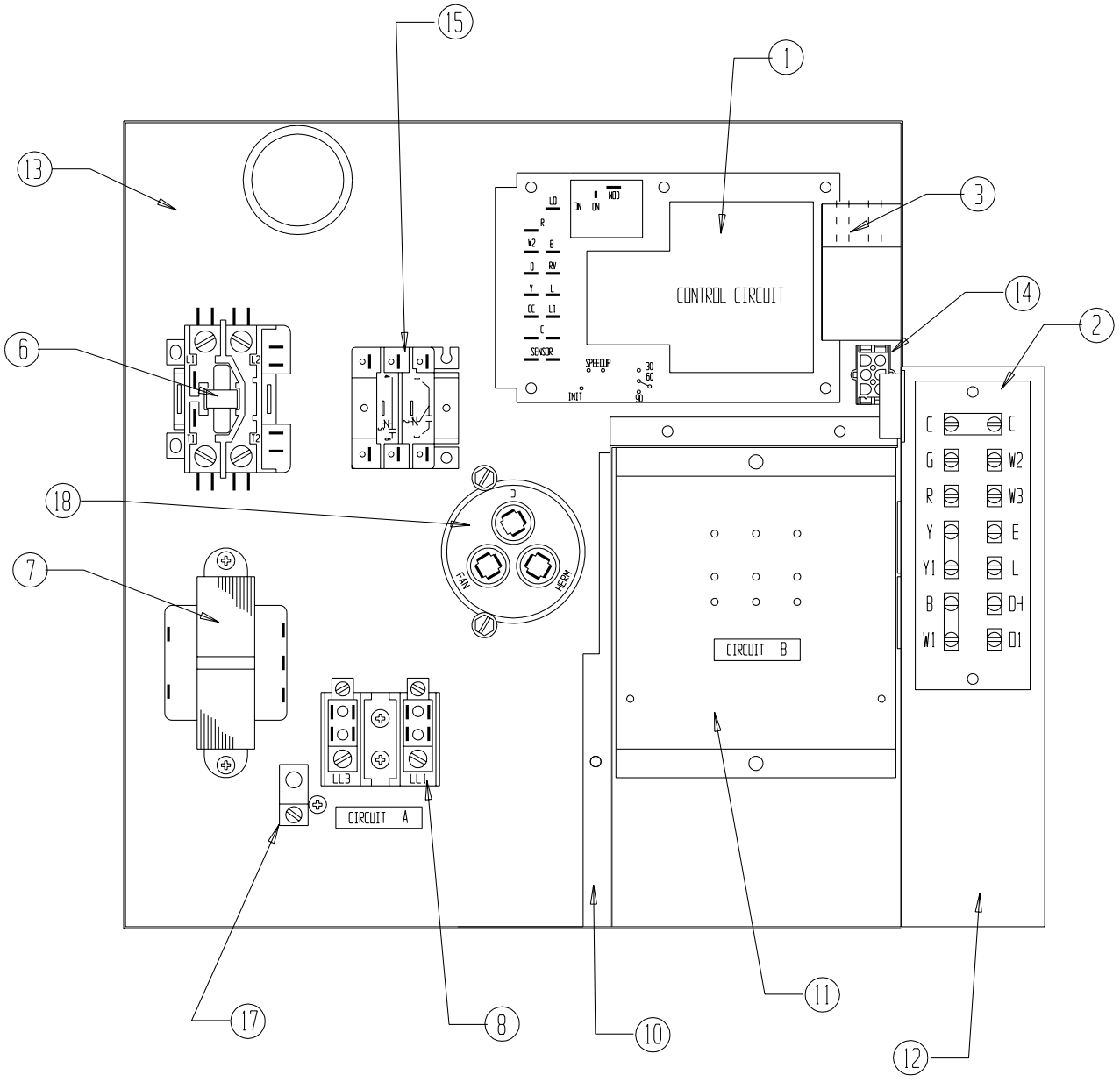

SEXP-433

Drawing No.	Part No.	Description	PH12241	PH1230	PH1236
1	8201-069	Heat Pump Control	X	X	X
2	8607-025	Terminal Strip	X	X	X
3	8201-074	Blower Interlock Relay	X	X	X
6	8401-007	Contactor	X	X	X
7	8407-035	Transformer	X	X	X
8	8607-013	Terminal Block	X	X	X
10	116-149	Control Panel Partition	X	X	X
11	116-150	Terminal Block Shield	X	X	X
12	116-148	Low Voltage Box	X	X	X
13	516Y141	Control Panel	X	X	X
14	3000-976	Wire Assembly	X	X	
14	3000-974	Wire Assembly			X
15	8201-013	Emergency Heat Relay			X
17	8611-006	Ground Terminal	X	X	X
18	8552-052	Capacitor 45/5 - 370		X	
18	8552-063	Capacitor 50/5 - 370			X
18	8552-048	Capacitor 35/5 - 370	X		
NS	4098-123	Wiring Diagram	X		
NS	4098-124	Wiring Diagram		X	X

NS = Not Shown

CONTROL PANEL

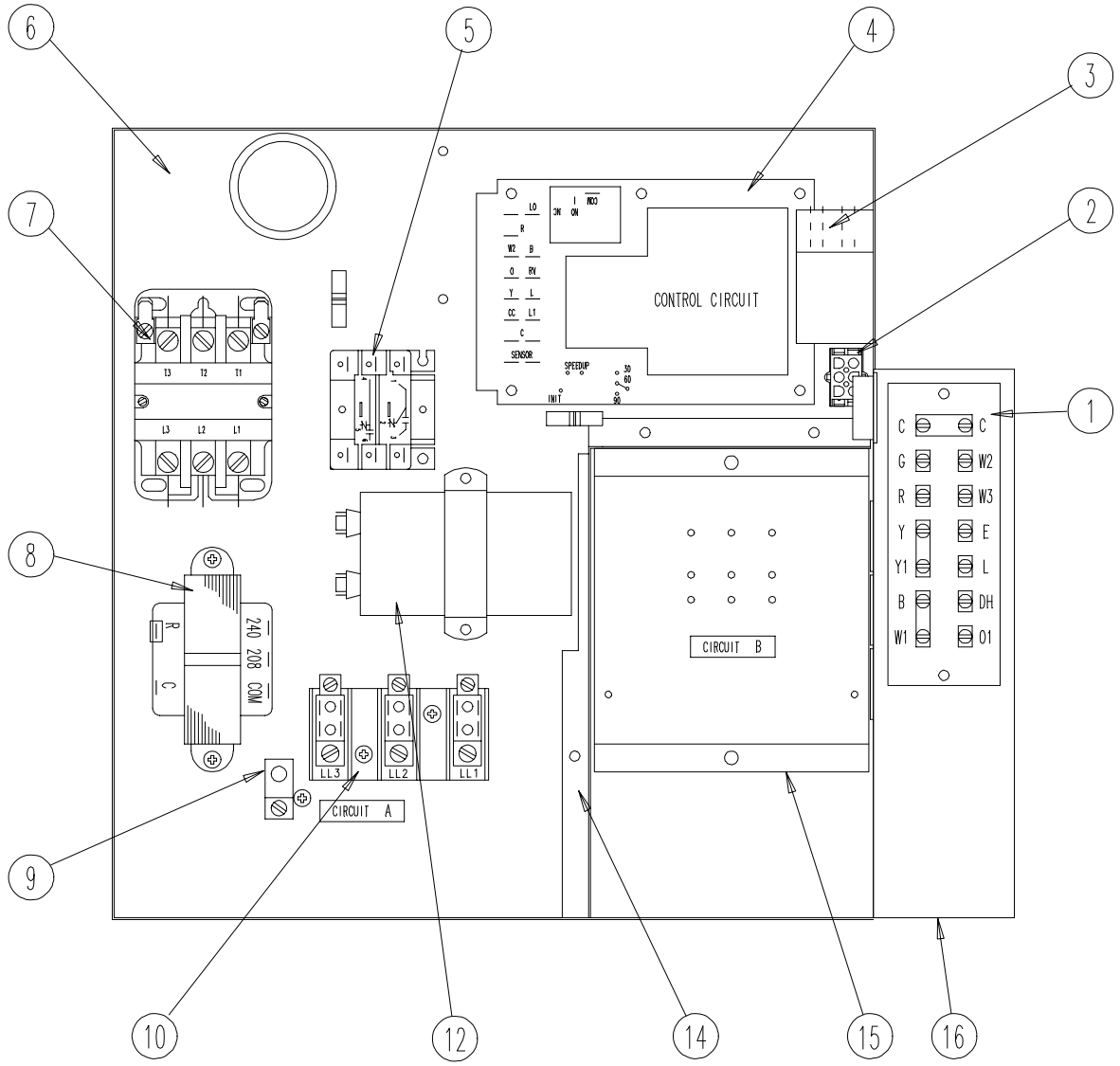

SEXP-304

Drawing No.	Part No.	Description	PH1236-B
1	8607-025	Terminal Strip	X
2	3000-1100	Wire Assembly	X
3	8201-074	Blower Interlock Relay	X
4	8201-069	Heat Control Pump	X
5	8201-013	Changeover Relay	X
6	516-147	Control Panel	X
7	8401-002	Contactor	X
8	8407-035	Transformer	X
9	8611-006	Ground Terminal	X
10	8607-014	Terminal Block	X
12	8552-002	Capacitor 5-370	X
14	116-149	Control Panel Partition	X
15	116-150	Terminal Block Support	X
16	116-148	Low Voltage Box	X
NS	4098-211	Wiring Diagram	X

NS = Not Shown