REPLACEMENT PARTS MANUAL

PACKAGE HEAT PUMP

Models:

PH13241-A PH13301-A
PH13361-A PH13361-B

General Notes

- Revised and/or additional pages may be issued from time to time.
- A complete and current manual consists of pages shown in the following contents section.

Important

- Contact the installing and/or local Bard distributor for all parts requirements. Make sure you have the complete model and serial number available from the unit rating plates.

Contents

Description Page

Cabinet Components
- Exploded View 2
- Usage List 3

Functional Components
- Exploded View 4
- Usage List 5

Control Panels
- Exploded View 1-Phase 6
- Usage List 1-Phase 7
- Exploded View 3-Phase 8
- Usage List 3-Phase 9

Bard SINCE 1914

CLIMATE CONTROL SOLUTIONS

Bard Manufacturing Company, Inc.
Bryan, Ohio 43506

Since 1914...Moving, ahead just as planned.

Manual: 2110-262A
Supersedes: 2110-262
File: Tab 11
Date: 08-20-07

CABINET COMPONENTS

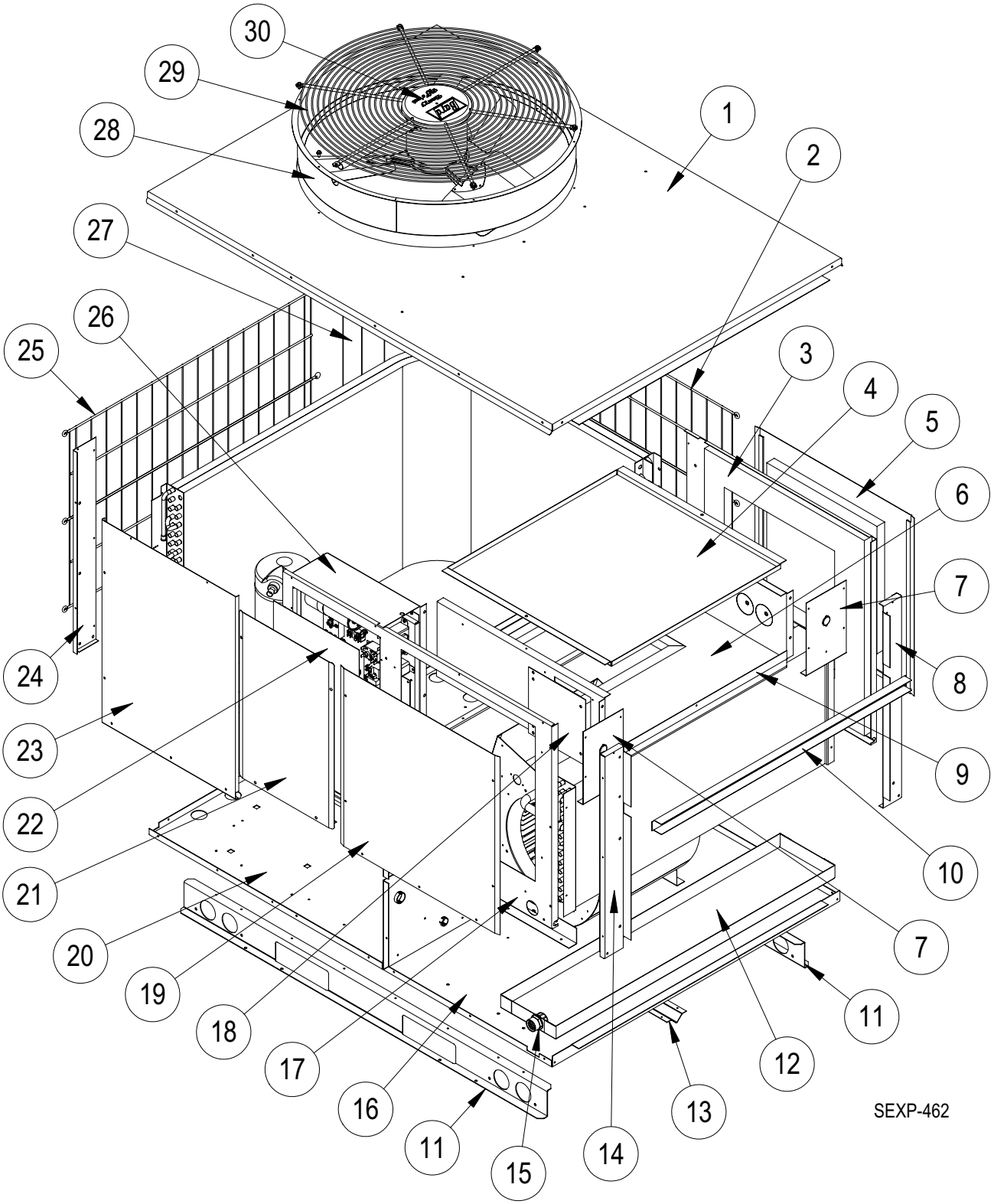

Drawing No.	Part No.	Description	PH13241-A	PH13301-A	PH13361-A	PH13361-B
1	507-252-X	Top	X	X	X	X
2	7051-052	Side Condenser Grille	X	X	X	X
3	501-468-X	Left Side	X	X	X	X
4	134-017	Heat Strip Shield	X	X	X	X
5	S553-394-X	Heater Access Door	X	X	X	X
6	521-397	Blower Partition	X	X	X	X
7	137-504	Blower Partition Side Fill	2	2	2	2
8	549-101-X	Left Rear Corner	X	X	X	X
9	104-1174	Plenum Support Angle	X	X	X	X
10	165-589-X	Plenum Channel	X	X	X	X
11	102-460	Base Rail	2	2	2	2
12	S123-113	Drain Pan with Fitting	X	X	X	X
13	140-321-X	Center Base Rail	X	X	X	X
14	549-102-X	Right Rear Corner	X	X	X	X
15	6094-003	Drain Pan Fitting	X	X	X	X
16	S127-347-X	Indoor Base	X	X	X	X
17	S501-467-X	Right Side	X	X	X	X
18	142-017	0KW Cover Plate	X	X	X	X
19	S553-402-X	Blower Access Door	X	X	X	X
20	127-346-X	Outdoor Base	X	X	X	X
21	S153-395-X	Outer Control Panel Door	X	X	X	X
22	S153-397	Inner Control Panel Door	X	X	X	X
23	S153-396-X	Compressor Access Door	X	X	X	X
24	149-100-X	Right Front Corner	X	X	X	X
25	7051-051	Front Condenser Grille	X	X	X	X
26	Control Panel Assembly - See Drawing		X	X	X	X
27	149-099-X	Left Front Corner	X	X	X	X
28	S167-014-X	Fan Venturi	X	X	X	X
29	7051-018	Fan and Motor Mount Grille	X	X	X	X
30	5252-009	Bard Nameplate	X	X	X	X

FUNCTIONAL COMPONENTS

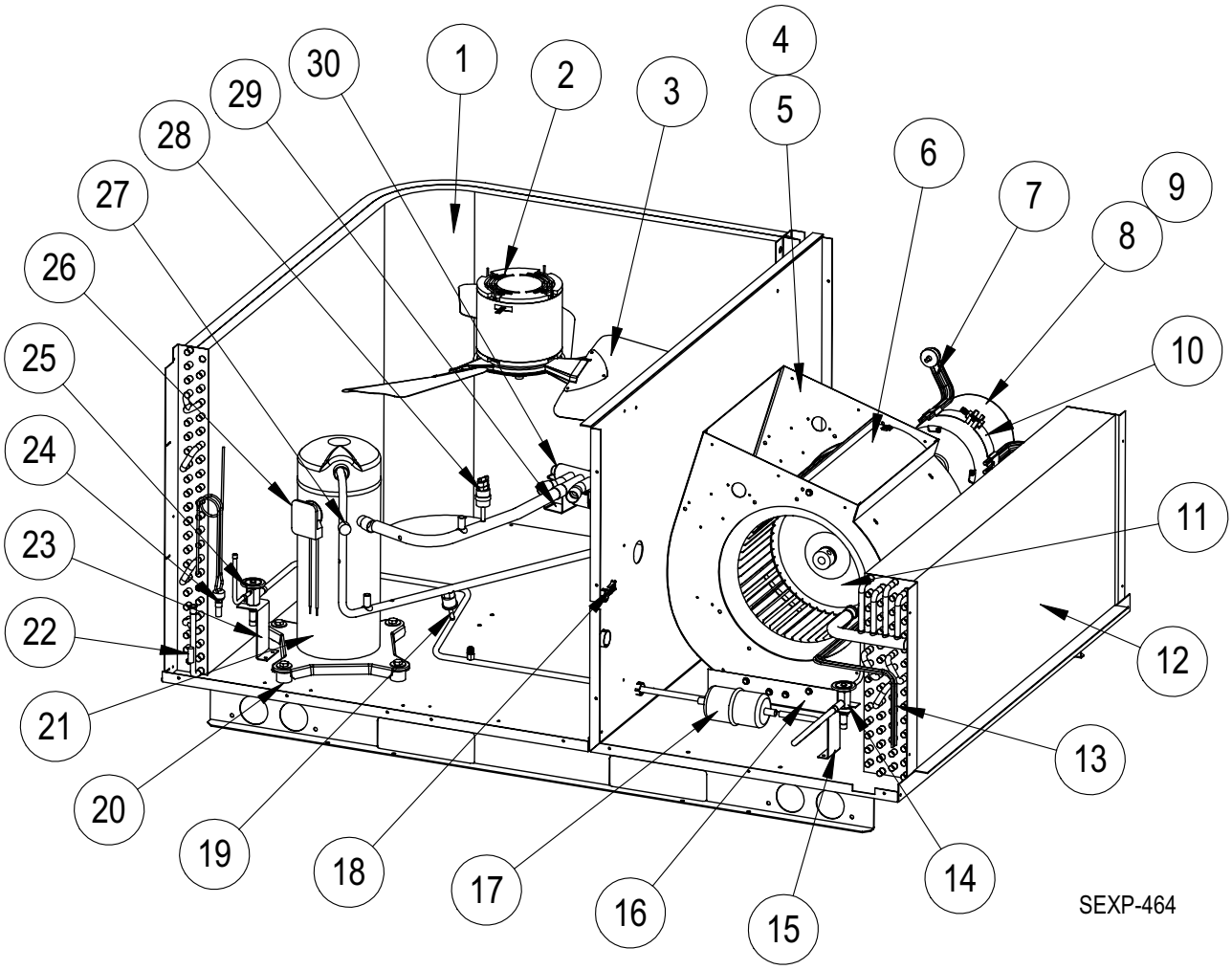

Drawing No.	Part No.	Description	PH13241-A	PH13301-A	PH13361-A	PH13361-B
1	5051-132BX	Condenser Coil	X			
1	5051-133BX			X	X	X
2	8102-013	Outdoor Motor	X	X	X	X
3	5151-056	Fan Blade	X	X	X	X
4	900-239-001	Complete Blower Assembly	X			
4	900-240-003			X		
4	900-240-002				X	X
5	151-097	Blower Housing	X	X	X	X
6	144-130	Diffuser	X	X	X	X
7	8620-034	Motor Mount Kit	X	X	X	X
8	8105-045-0016	Programmed 1/3 HP Motor w/Control	X			
8	8106-035-0020	Programmed 1/2 HP Motor w/Control		X		
8	8[illegible]035-0021	Programmed 1/2 HP Motor w/Control			X	X
9	C8105-045-0016	Programmed 1/3 HP Control Only	X			
9	C8105-035-0020	Programmed 1/2 HP Control Only		X		
9	C8[illegible]035-0021	Programmed 1/2 HP Control Only			X	X
10	8620-034	Motor Mount Kit	X	X	X	X
11	5152-049	Blower Wheel	X	X	X	X
12	5060-125BX	Evaporator Coil	X			
12	5060-126BX			X	X	X
13	S800-0348	Cooling Distributor 4 Outlet	X			
13	S800-0349			X	X	X
14	5651-177	Cooling Expansion Valve	X	X	X	X
15	113-325	Cooling TXV Mounting Bracket	X	X	X	X
16	104-1043	Blower Leg	2	2	2	2
17	5201-009	Bi-Directional Filter Drier	X	X	X	X
18	3000-1236	6 Pin Plug for Heater Package	X	X	X	X
19	1804-0327	High Pressure Switch	X	X	X	X
20	1012-217	Cage Nut	4	4	4	4
21	8000-276	Compressor	X			
21	8000-277			X		
21	8000-278				X	
21	8000-283					X
22	8620-095	Defrost Sensor Replacement Kit	X	X	X	X
23	112-326	Heating TXV Mounting Bracket	X			
23	112-325			X	X	X
24	S800-0347	Heating Distributor 2 Outlet	N/A	X	X	X
25	5651-177	Heating Expansion Valve	X	X	X	X
26	3000-1237	Compressor Power Lead	X	X	X	
26	3000-1244					X
27	8408-039	Discharge Line Thermostat	X	X	X	X
28	1804-0338	Low Pressure Switch	X	X	X	X
29	5650-042	24V Solenoid Coil (Red Casing-Ranco)	X	X	X	X
29	5650-046	24V Solenoid Coil (Black Casing-San Hua)				
30	5650-038	Reversing Valve w/Solenoid Coil	X	X	X	X

N/A = Not Applicable

Reference SEXP-464

CONTROL PANEL — 1-PHASE

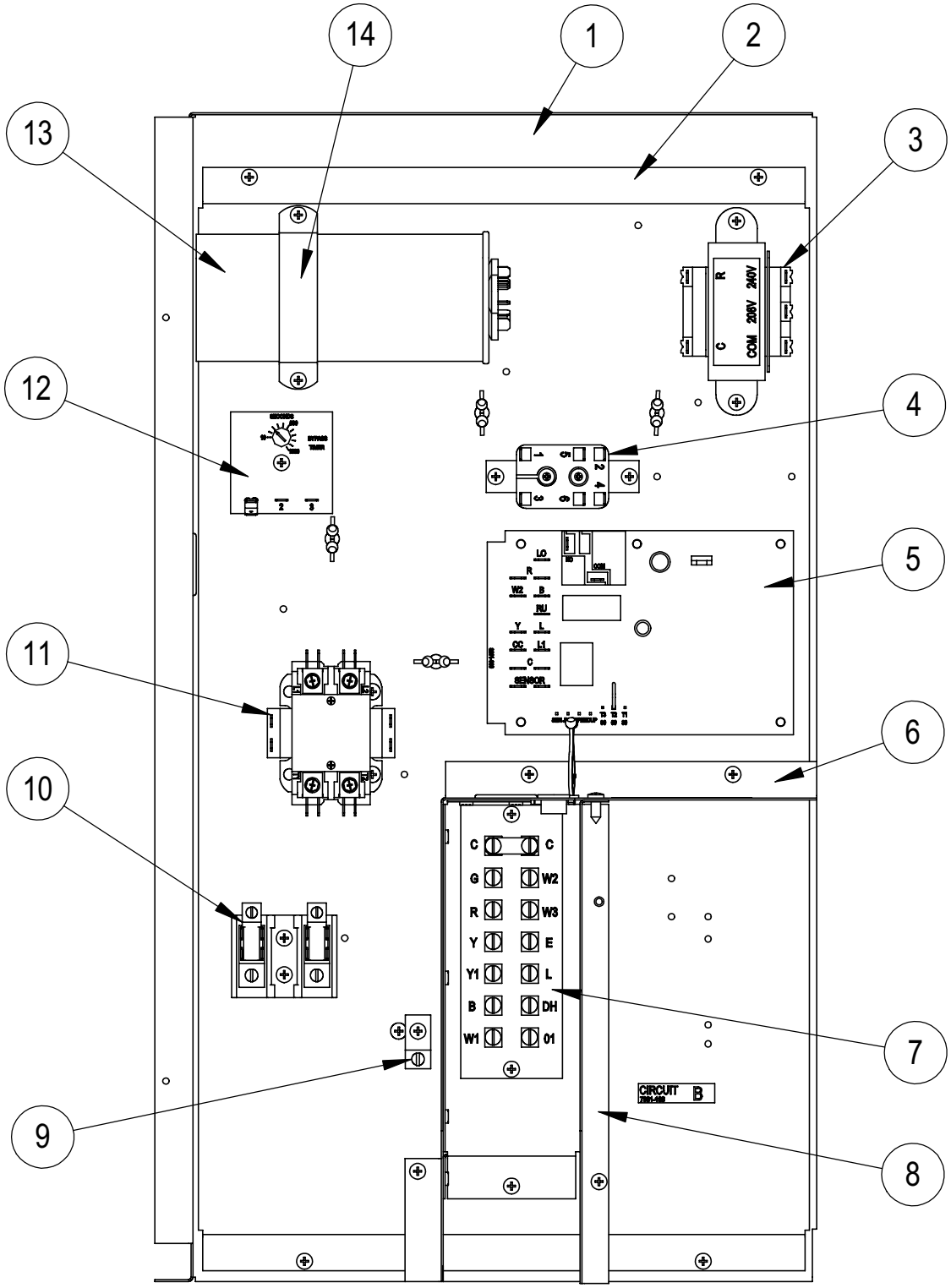

SEXP-465

Drawing No.	Part No.	Description	PH13241-A	PH13301-A	PH13361-A
1	117-262	Control Panel	X	X	X
2	117-261	Control Mounting Plate	X	X	X
3	8407-035	Transformer	X	X	X
4	8201-015	Relay	X	X	X
5	8201-102	Heat Pump Control	X	X	X
6	117-263	Low Voltage Box Assembly	X	X	X
7	8607-019	Terminal Strip	X	X	X
8	135-218	Terminal Shield	X	X	X
9	8611-006	Ground Terminal	X	X	X
10	8607-013	Terminal Block	X	X	X
11	8401-007	Contactor	X	X	X
12	8201-078	Bypass Timer	X	X	X
13	8552-048	Capacitor 35/5 MFD 370V	X		
13	8552-050	Capacitor 40/5 MFD 370V		X	
13	8552-052	Capacitor 40/5 MFD 370V			X
14	8550-007	Capacitor Bracket	X		
14	8550-008			X	X
NS	4110A100	Wiring Diagram	X	X	X
NS	4110A101	Ladder Diagram	X	X	X

NS = Not Shown

Reference SEXP-465

CONTROL PANEL — 3-PHASE

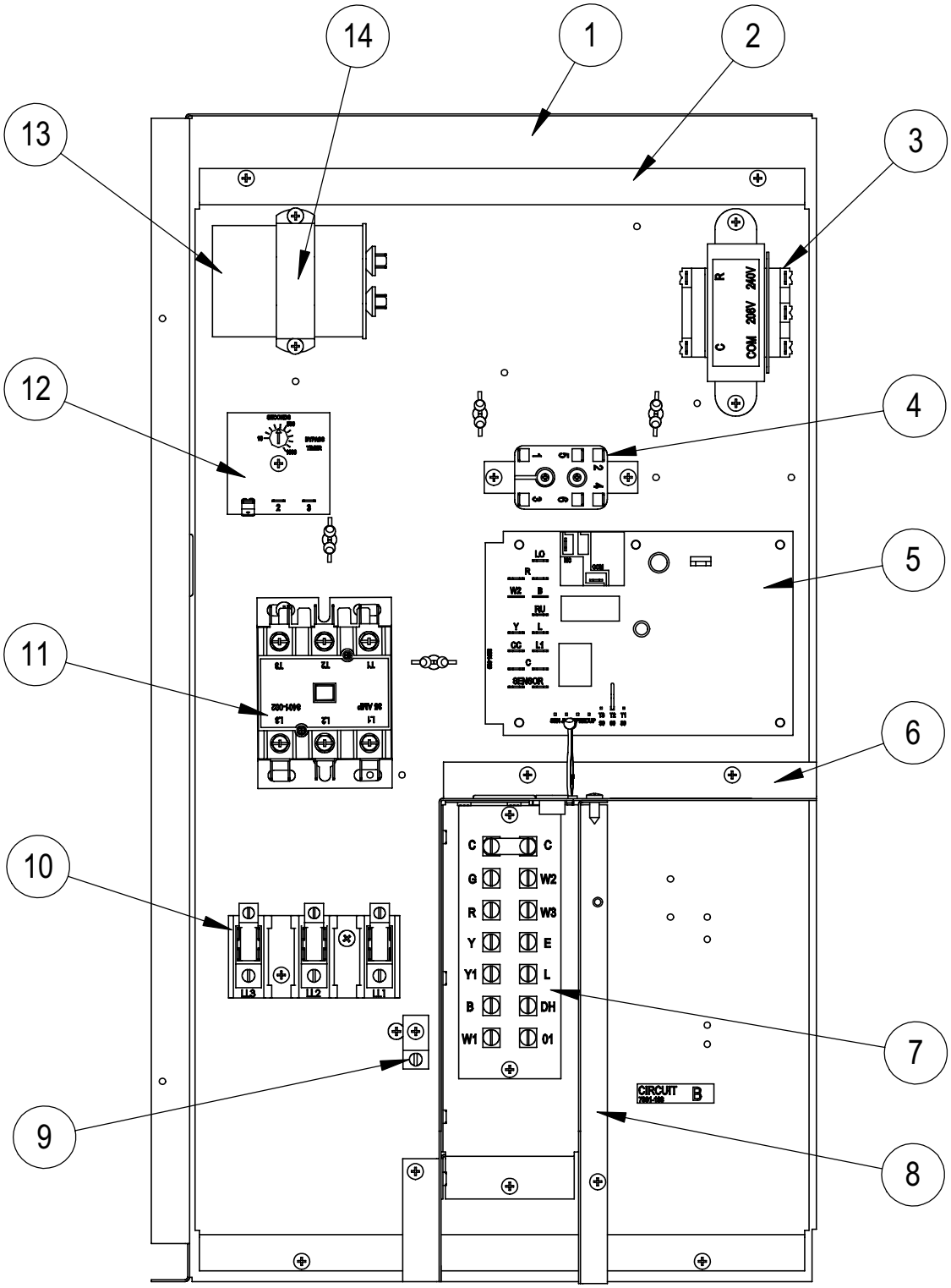

SEXP-467

Drawing No.	Part No.	Description	PH13361-B
1	117-262	Control Panel	X
2	117-261	Control Mounting Plate	X
3	8407-035	Transformer	X
4	8201-015	Relay	X
5	8201-102	Heat Pump Control	X
6	117-263	Low Voltage Box Assembly	X
7	8607-019	Terminal Strip	X
8	135-218	Terminal Shield	X
9	8611-006	Ground Terminal	X
10	8607-014	Terminal Block	X
11	8401-002	Contactor	X
12	8201-078	Bypass Timer	X
13	8552-002	Capacitor 5 MFD 370V	X
14	8550-003	Capacitor Bracket	X
NS	4110A200	Wiring Diagram	X
NS	4110A201	Ladder Diagram	X

NS = Not Shown

Reference SEXP-467