PACKAGE HEAT PUMP

Models:

REPLACEMENT PARTS MANUAL

PH13422-A **PH13422-B**
PH13422-C **PH13482-A**
PH13482-B **PH13482-C**
PH13602-A **PH13602-B**
PH13602-C

General Notes

- Revised and/or additional pages may be issued from time to time.
- A complete and current manual consists of pages shown in the following contents section.

Important

- Contact the installing and/or local Bard distributor for all parts requirements. Make sure you have the complete model and serial number available from the unit rating plates.

Contents

Description	Page
Cabinet Components	
◆ Exploded View	2
◆ Usage List	3
Functional Components	
◆ Exploded View	4
◆ Usage List	5
Control Panels	
◆ Exploded View 1-Phase	6
◆ Usage List 1-Phase	7
◆ Exploded View 3-Phase	8
◆ Usage List 3-Phase	9
Control Panels	
◆ Exploded View 3-Phase	10
◆ Usage List 3-Phase	11

Bard SINCE 1914
CLIMATE CONTROL SOLUTIONS

Bard Manufacturing Company, Inc.
Bryan, Ohio 43506

Since 1914...Moving, ahead just as planned.

Manual: 2110-264A
Supersedes: 2110-264
File: Tab 11
Date: 07-09-08

CABINET COMPONENTS

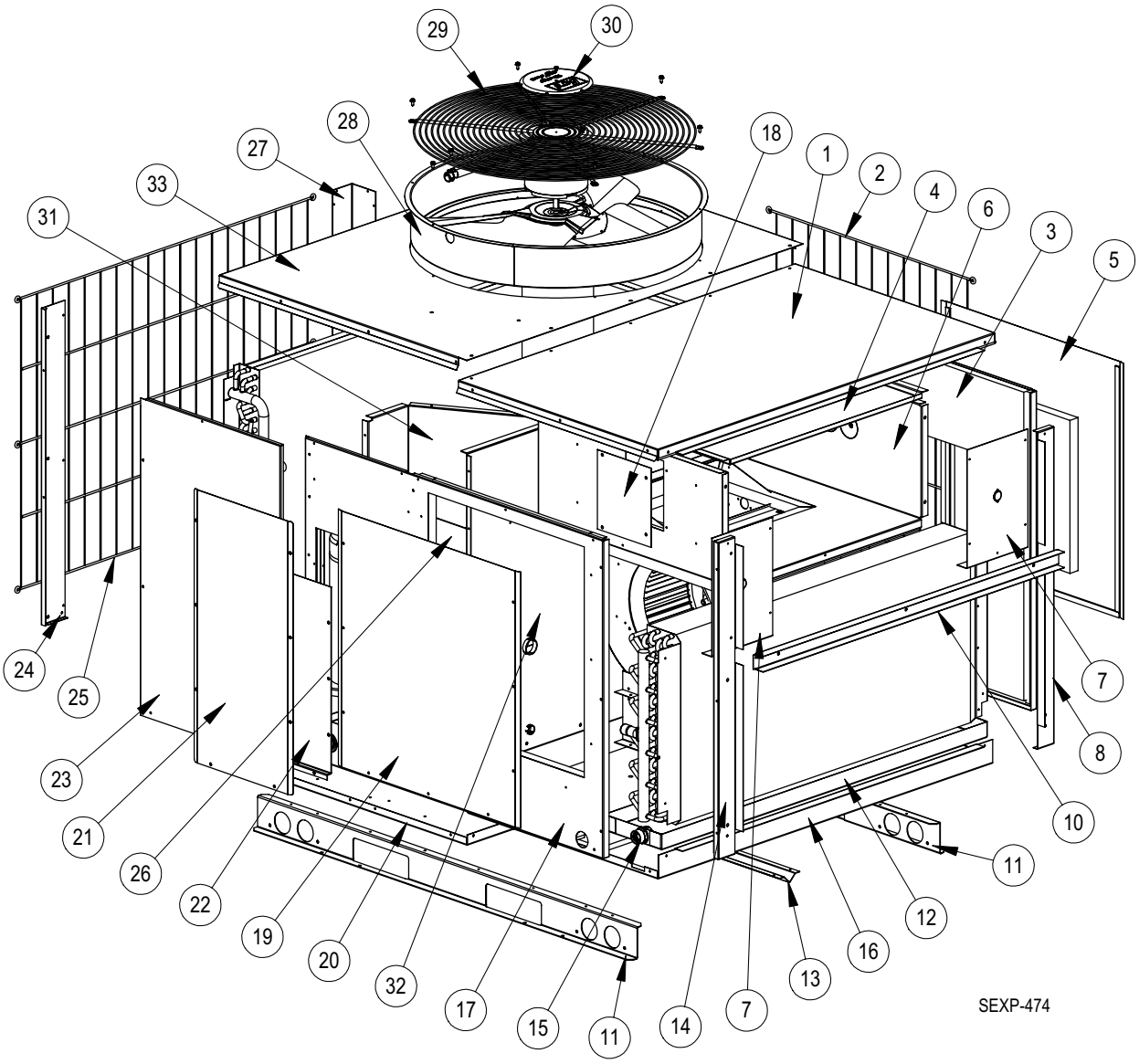

Drawing No.	Part No.	Description	PH13422-A	PH13422-B	PH13422-C	PH13482-A	PH13482-B	PH13482-C	PH13602-A	PH13602-B	PH13602-C
1	507-255-X	Indoor Top	X	X	X	X	X	X	X	X	X
2	7051-054	Side Condenser Grille	X	X	X	X	X	X	X	X	X
3	501-474-X	Left Side	X	X	X	X	X	X	X	X	X
4	134-134	Heat Strip Shield	X	X	X	X	X	X	X	X	X
5	S553-400-X	Blower Access Door	X	X	X	X	X	X	X	X	X
6	521-400	Blower Partition	X	X	X	X	X	X	X	X	X
7	137-513	Blower Partition Side Fill	2	2	2	2	2	2	2	2	2
8	549-106-X	Left Rear Corner	X	X	X	X	X	X	X	X	X
10	165-590-X	Plenum Channel	X	X	X	X	X	X	X	X	X
11	102-460	Base Rail	2	2	2	2	2	2	2	2	2
12	S123-114	Drain Pan with Fitting	X	X	X	X	X	X	X	X	X
13	140-321-X	Center Base Rail	X	X	X	X	X	X	X	X	X
14	549-103-X	Right Rear Corner	X	X	X	X	X	X	X	X	X
15	6094-003	Drain Pan Fitting	X	X	X	X	X	X	X	X	X
16	S126-350-X	Indoor Base	X	X	X	X	X	X	X	X	X
17	S501-473-X	Right Side	X	X	X	X	X	X	X	X	X
17	S501-512-X	Right Side	X	X	X	X	X	X	X	X	X
18	142-045	0KW Cover Plate	X	X	X	X	X	X	X	X	X
19	S553-409-X	Heater Access Door	X	X	X	X	X	X	X	X	X
20	126-349-X	Outdoor Base	X	X	X	X	X	X	X	X	X
21	S153-399-X	Outer Control Panel Door	X	X	X	X	X	X	X	X	X
22	S153-397	Inner Control Panel Door	X	X	X	X	X	X	X	X	X
23	S153-398-X	Compressor Access Door	X	X	X	X	X	X	X	X	X
24	149-104-X	Right Front Corner	X	X	X	X	X	X	X	X	X
25	7051-053	Front Condenser Grille	X	X	X	X	X	X	X	X	X
26	Control Panel Assembly - See Drawing		X	X	X	X	X	X	X	X	X
27	149-105-X	Left Front Corner	X	X	X	X	X	X	X	X	X
28	S167-014-X	Fan Venturi	X	X	X	X	X	X	X	X	X
29	7051-018	Fan and Motor Mount Grille	X	X	X	X	X	X	X	X	X
30	5252-009	Bard Nameplate	X	X	X	X	X	X	X	X	X
31	135-223	Control Panel Rain Shield	X	X	X	X	X	X	X	X	X
32	S521-399	Condenser Partition	X	X	X	X	X	X	X	X	X
33	107-254-X	Outdoor Top	X	X	X	X	X	X	X	X	X

FUNCTIONAL COMPONENTS

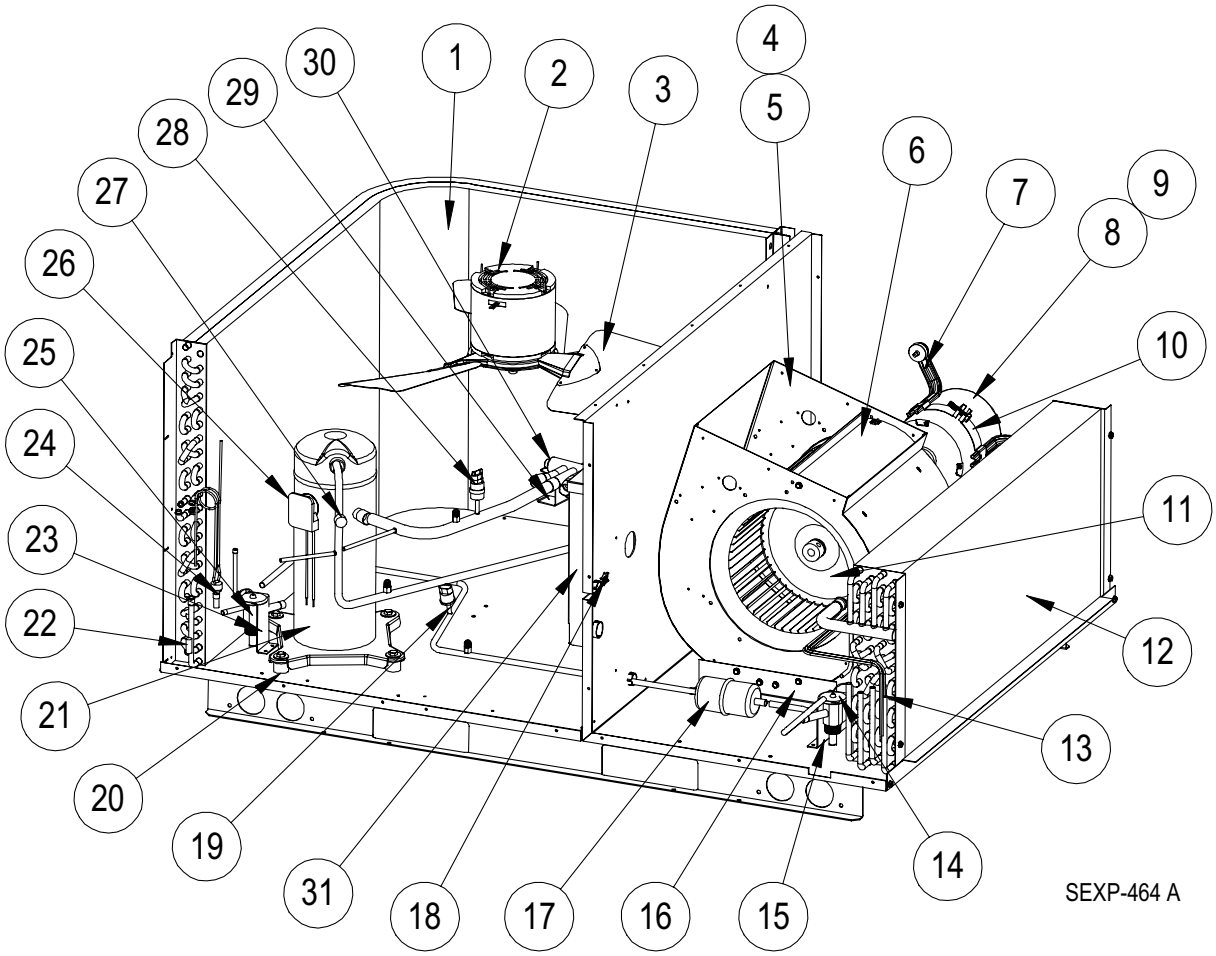

Drawing No.	Part No.	Description	PH13422-A	PH13422-B	PH13422-C	PH13482-A	PH13482-B	PH13482-C	PH13602-A	PH13602-B	PH13602-C
1	5051-139BX	Condenser Coil	X	X	X	X	X	X			
1	5051-143BX	Condenser Coil							X	X	X
1	5051-144BX	Sub-Cooler Coil							X	X	X
2	8104-019	Outdoor Motor	X	X	X	X	X	X	X	X	X
3	5151-057	Fan Blade	X	X	X	X	X	X	X	X	X
4	900-294-001	Complete Blower Assembly	X	X	X						
4	900-279-001	Complete Blower Assembly				X	X	X	X	X	X
5	151-097	Blower Housing	X	X	X	X	X	X	X	X	X
6	144-130	Diffuser	X	X	X	X	X	X	X	X	X
7	8620-034	Motor Mount Kit	X	X	X	X	X	X	X	X	X
8	S8106-045-0049	Programmed 1/2 HP Motor	X	X	X						
8	S8107-013-0048	Programmed 3/4 HP Motor				X	X	X	X	X	X
10	8620-034	Motor Mount Kit	X	X	X	X	X	X	X	X	X
11	5152-049	Blower Wheel	X	X	X	X	X	X	X	X	X
12	5060-128BX	Evaporator Coil	X	X	X	X	X	X	X	X	X
13	S800-0351	Cooling Distributor 4 Outlet	X	X	X	X	X	X	X	X	X
14	5651-179	Cooling Expansion Valve	X	X	X	X	X	X	X	X	X
15	113-325	Cooling TXV Mounting Bracket	X	X	X	X	X	X	X	X	X
16	104-795	Blower Leg	2	2	2	2	2	2	2	2	2
17	5201-010	Bi-Directional Filter Drier	X	X	X	X	X	X	X	X	X
18	3000-1236	6 Pin Plug for Heater Package	X	X	X	X	X	X	X	X	X
19	1804-0327	High Pressure Switch	X	X	X	X	X	X	X	X	X
20	1012-217	Cage Nut	4	4	4	4	4	4	4	4	4
21	8000-287	Compressor	X								
21	8000-290			X							
21	8000-306				X						
21	8000-288					X					
21	8000-291						X				
21	8000-307							X			
21	8000-289								X		
21	8000-292									X	
21	8000-308										X
22	8620-095	Defrost Sensor Replacement Kit	X	X	X	X	X	X	X	X	X
23	112-325	Heating TXV Mounting Bracket	X	X	X	X	X	X	X	X	X
24	S800-0352	Heating Distributor 2 Outlet	X	X	X	X	X	X	X	X	X
25	5651-178	Heating Expansion Valve	X	X	X	X	X	X			
25	5651-184	Heating Expansion Valve							X	X	X
28	1804-0338	Low Pressure Switch	X	X	X	X	X	X	X	X	X
29	5650-042	24V Solenoid Coil (Red Casing-Ranco)	X	X	X						
29	5650-046	24V Solenoid Coil (Black Casing-San Hua)				X	X	X	X	X	X
30	5650-040	Reversing Valve w/Solenoid Coil	X	X	X	X	X	X	X	X	X
31	8407-004	Step Down Transformer 480/240			X			X			X

Reference SEXP-464A

CONTROL PANEL — -A 208/230V, 1-PHASE

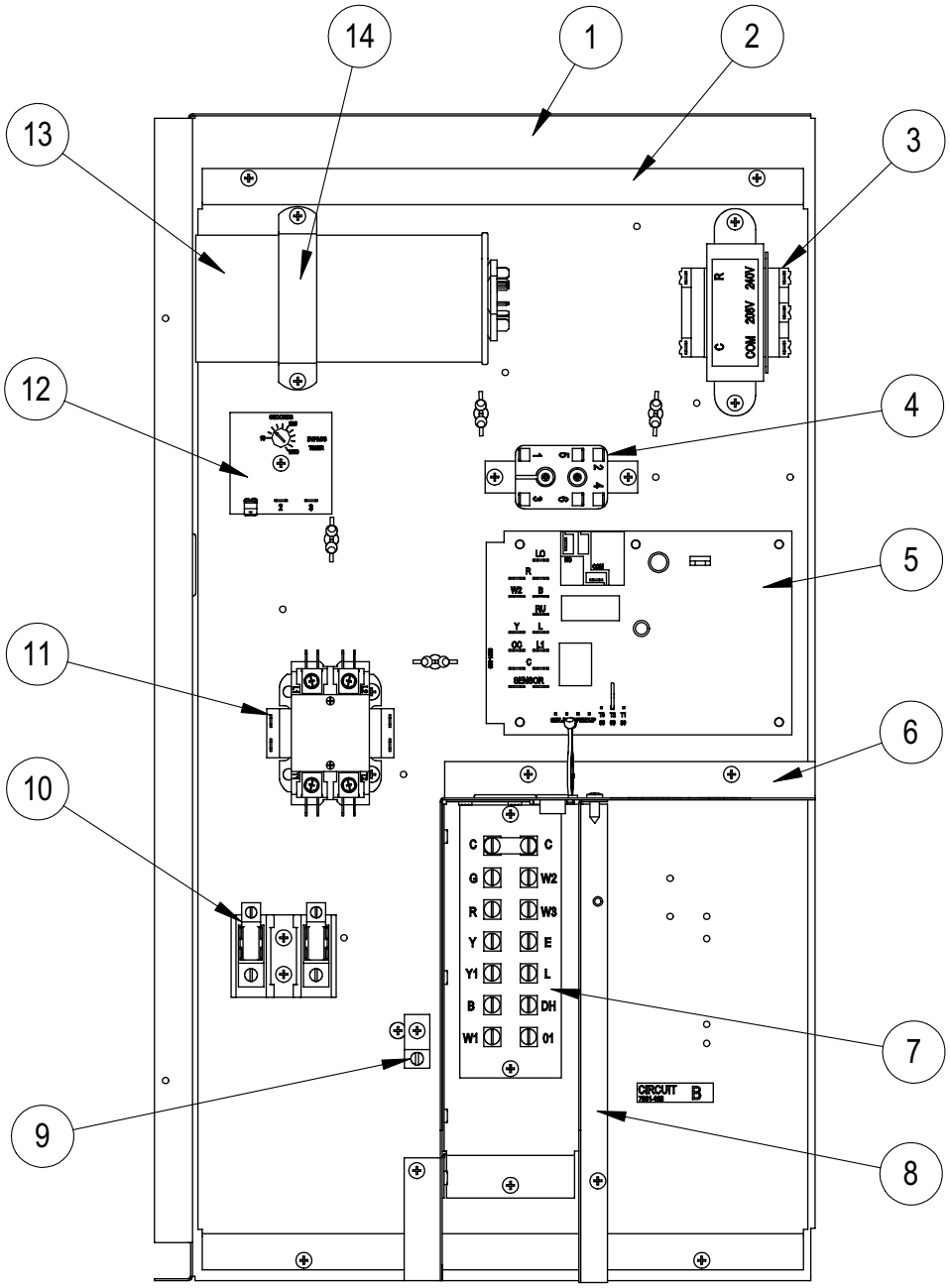

SEXP-465

Drawing No.	Part No.	Description	PH13422-A	PH13482-A	PH13602-A
1	117-262	Control Panel	X	X	X
2	117-261	Control Mounting Plate	X	X	X
3	8407-035	Transformer	X	X	X
4	8201-062	Relay	X	X	X
5	8201-102	Heat Pump Control	X	X	X
6	117-263	Low Voltage Box Assembly	X	X	X
7	8607-019	Terminal Strip	X	X	X
8	135-218	Terminal Shield	X	X	X
9	8611-006	Ground Terminal	X	X	X
10	8607-013	Terminal Block	X	X	X
11	8401-025	Contactor	X	X	X
12	8201-078	Bypass Timer	X	X	X
13	8552-062	Capacitor 60/5 MFD 370V	X		
13	8552-081	Capacitor 70/5 MFD 370V		X	X
14	8550-008	Capacitor Bracket	X	X	X
NS	4110A106	Wiring Diagram	X		
NS	4110A107	Ladder Diagram	X		X
NS	4110A108	Wiring Diagram		X	
NS	4110A109	Wiring Diagram		X	
NS	4110A110	Wiring Diagram			X

NS = Not Shown

Reference SEXP-465

CONTROL PANEL — -B 208/230V, 3-PHASE

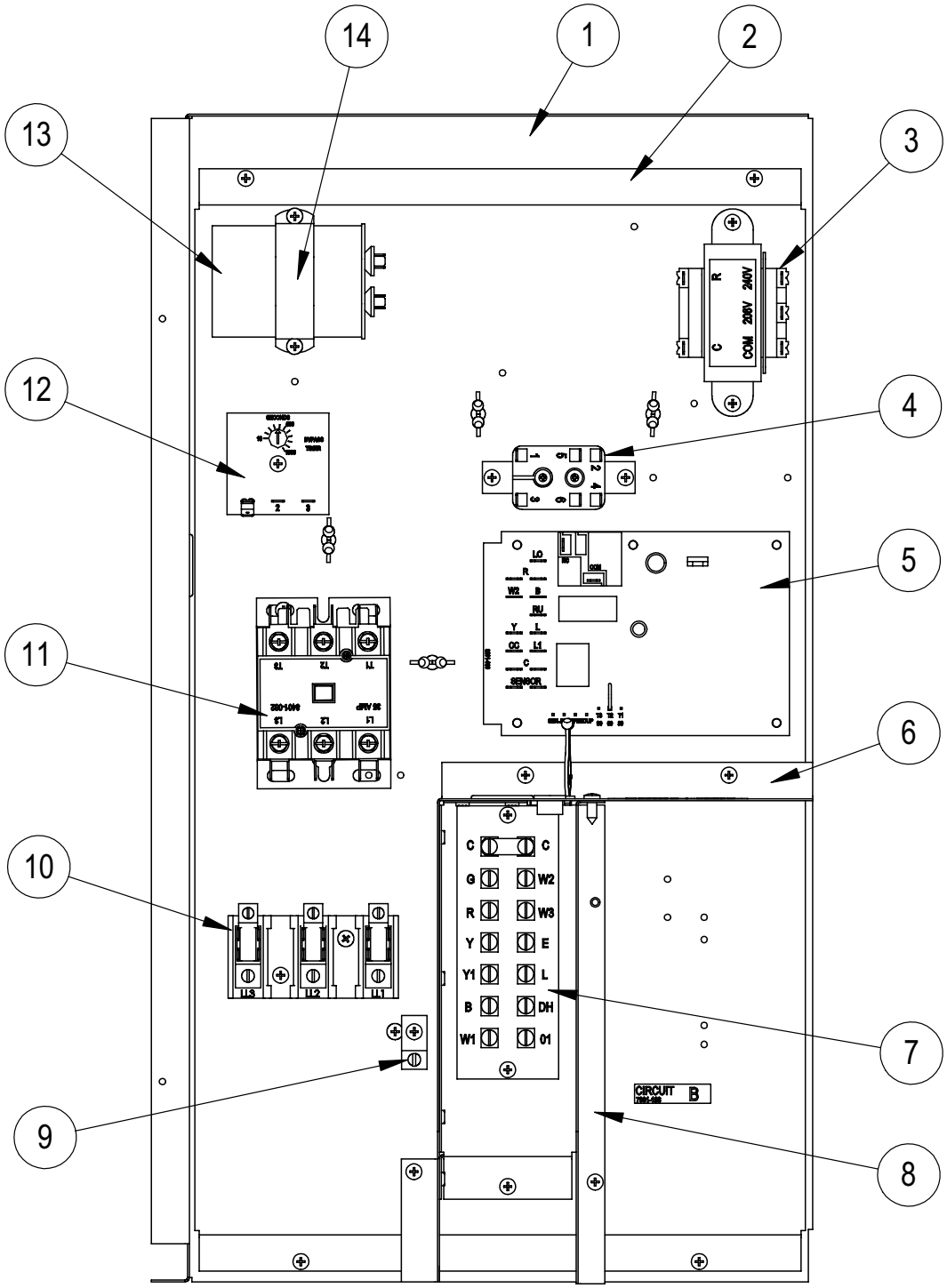

SEXP-467

Drawing No.	Part No.	Description	PH13422-B	PH13482-B	PH13602-B
1	117-262	Control Panel	X	X	X
2	117-261	Control Mounting Plate	X	X	X
3	8407-035	Transformer	X	X	X
4	8201-062	Relay	X	X	X
5	8201-102	Heat Pump Control	X	X	X
6	117-263	Low Voltage Box Assembly	X	X	X
7	8607-019	Terminal Strip	X	X	X
8	135-218	Terminal Shield	X	X	X
9	8611-006	Ground Terminal	X	X	X
10	8607-014	Terminal Block	X	X	X
11	8401-002	Contactor	X	X	X
12	8201-078	Bypass Timer	X	X	X
13	8552-002	Capacitor 5 MFD 370V	X	X	X
14	8550-003	Capacitor Bracket	X	X	X
NS	4110A204	Wiring Diagram	X		
NS	4110A205	Ladder Diagram	X		X
NS	4110A206	Wiring Diagram		X	
NS	4110A207	Ladder Diagram		X	
NS	4110A208	Wiring Diagram			X

NS = Not Shown

Reference SEXP-467

CONTROL PANEL — -C 460V, 3-PHASE

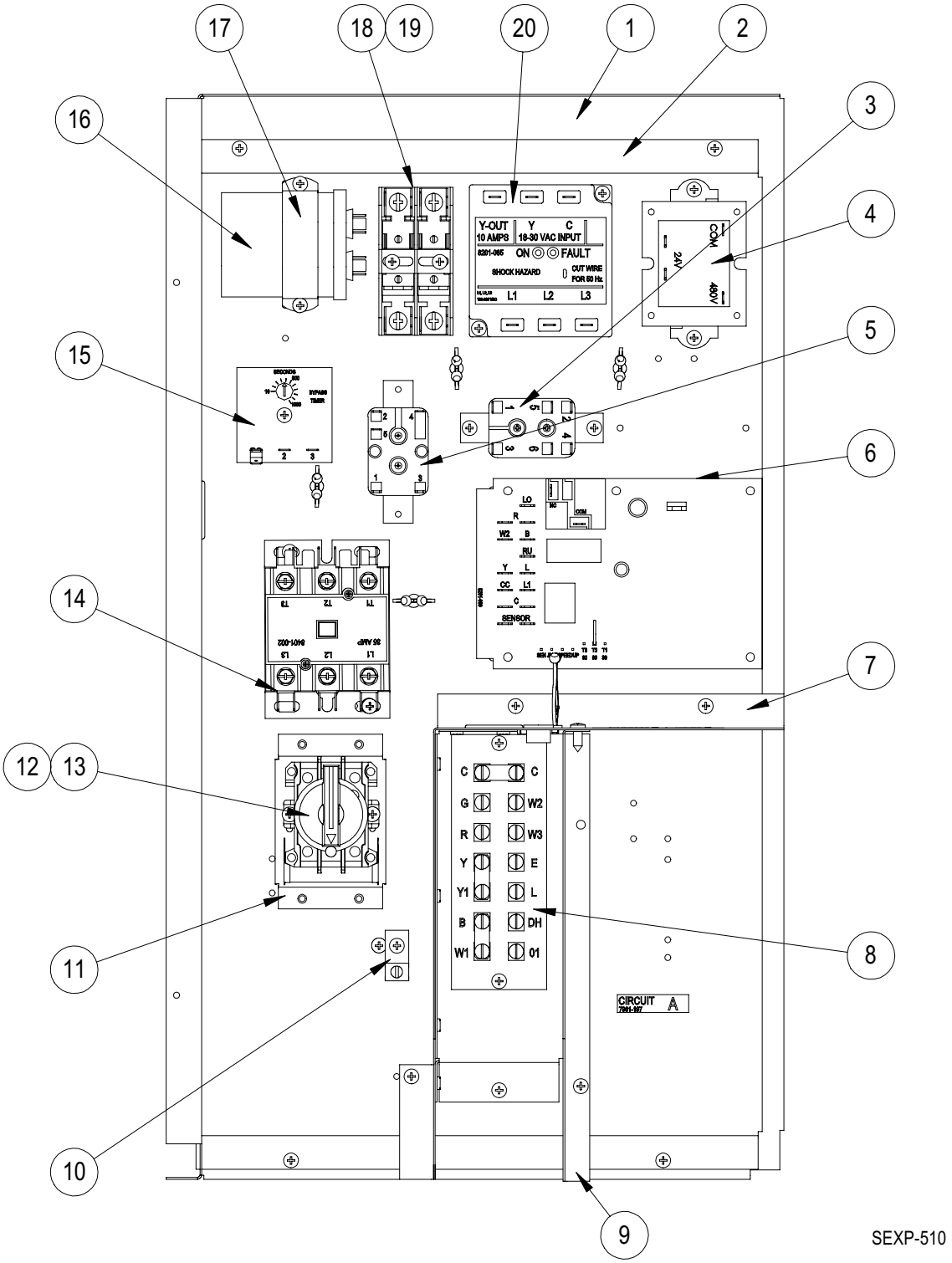

Drawing No.	Part No.	Description	PH13422-C	PH13482-C	PH13602-C
1	117-262	Control Panel	X	X	X
2	117-261	Control Mounting Plate	X	X	X
3	8201-062	Emergency Heat Relay	X	X	X
4	8407-042	Transformer 480/24 VAC	X	X	X
5	8201-009	Fan Motor Relay,	X	X	X
6	8201-102	Heat Pump Control Board	X	X	X
7	117-263	Low Voltage Box Assembly	X	X	X
8	8607-020	Terminal Strip	X	X	X
9	135-218	Terminal Shield	X	X	X
10	8611-006	Ground Terminal	X	X	X
11	126-365	Disconnect Mounting Base	X	X	X
12	8615-068	Rotary Disconnect Switch	X	X	X
13	8615-071	Rotary Disconnect Handle	X	X	X
14	8401-002	Contactor	X	X	X
15	8201-078	Bypass Timer	X	X	X
16	8552-002	Capacitor 5 MFD 370V	X	X	X
17	8550-003	Capacitor Bracket	X	X	X
18	8614-041	Fuse Block	X	X	X
19	8614-042	7A Class CC Fuse	2	2	2
20	8201-085	Phase Monitor	X	X	X
NS	4110A300	Wiring Diagram	X		
NS	4110A301	Ladder Diagram	X		X
NS	4110A302	Wiring Diagram		X	
NS	4110A303	Ladder Diagram		X	
NS	4110A304	Wiring Diagram			X

NS = Not Shown

Reference SEXP-510