Replacement Parts Manual

Packaged Air Conditioner and Heat Pump Heater Packages

MODEL: EHP513

General Notes

- Revised and/or additional pages may be issued from time to time.
- A complete and current manual consists of pages shown in the following contents section.

Important

- Contact the installing and/or local Bard distributor for all parts requirements. Make sure you have the complete model and serial number available from the unit rating plates.

Contents

Description — Page

Functional Components – A Series
- Exploded View 2
- Usage List 3

Functional Components – B Series
- Exploded View 4
- Usage List 5

Functional Components – C Series
- Exploded View 6
- Usage List 7

Bard Manufacturing Company, Inc.
Bryan, Ohio 43506

Since 1914...Moving ahead, just as planned.

Manual : 2110-309A
Supersedes: 2110-309
File: Tab 12
Date: 04-15-08

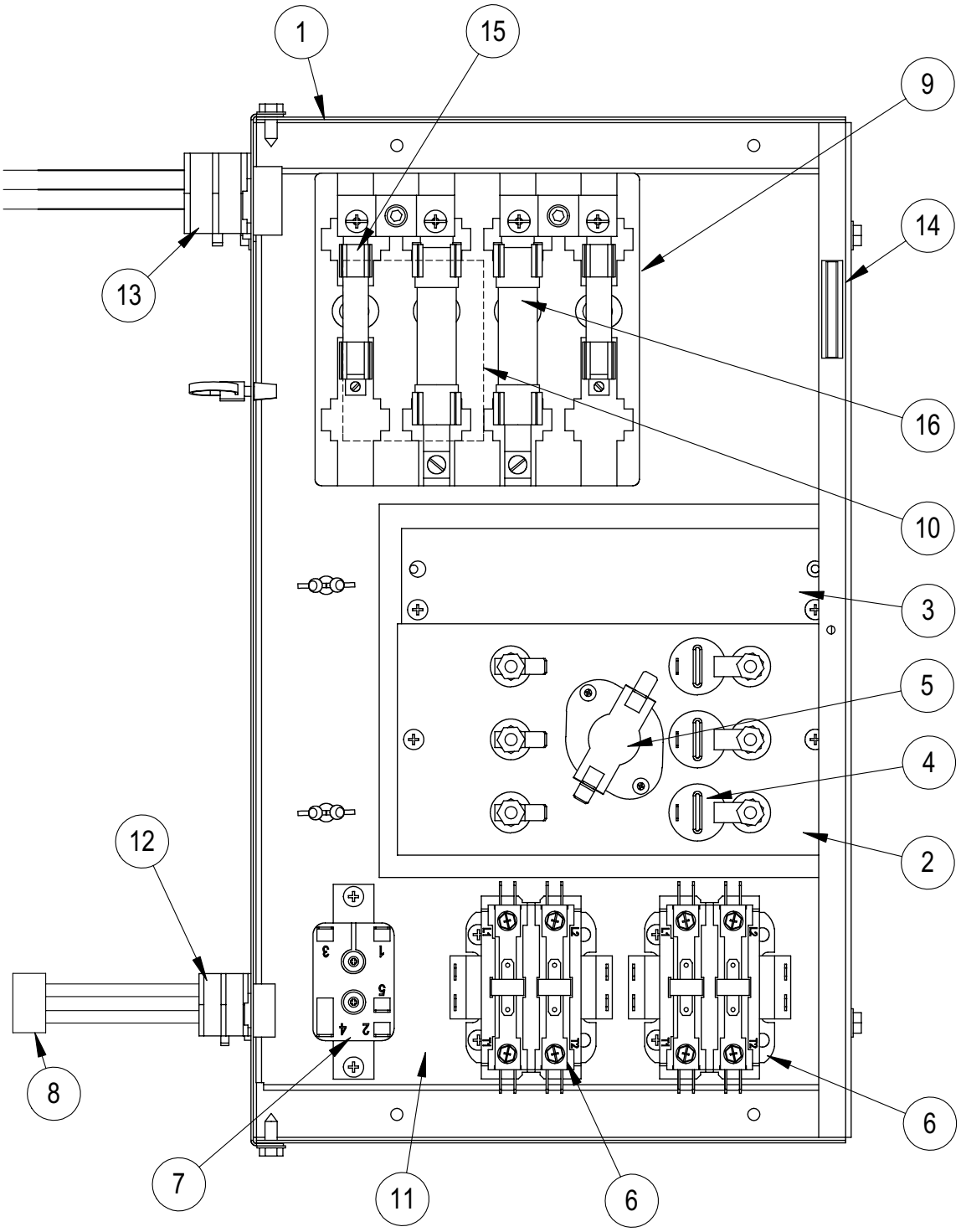

SEXP-475

Drawing No.	Part No.	Description	EHP513-A05	EHP513-A10	EHP513-A15
1	117-270	Heater Box Assembly	X	X	X
2	8604-089	Heat Strip 5 KW 240V	X		
2	8604-095	Heat Strip 10 KW 240V		X	
2	8604-096	Heat Strip 15 KW 240V			X
3	136-091	Fill Plate	X	X	
3	136-253	Fill Plate			X
4	8402-114	Thermal Cutoff	1	2	3
5	8402-083	Limit Control			X
5	8402-081	Limit Control	X		
5	8402-082	Limit Control		X	
6	8401-006	Contactor	X	X	2
7	8201-062	Blower Interlock Relay	X	X	X
8	3000-1243	Wire Assembly	X	X	
8	3000-1242	Wire Assembly			X
9	8614-017	Fuse Block			X
10	8607-013	Terminal Block	X	X	
11	117-269	Heater Box Plate	X	X	X
12	8611-052	Plastic Connector	X	X	X
13	8611-046	1/2 Plastic Connector	X	X	X
14	1171-033	Magnetic Catch			X
15	8614-006	30A Fuse			2
16	8614-007	60A Fuse			2
NS	133-192	Hinged Heater Box Cover	X	X	X
THE FOLLOWING PARTS CONTAINED IN THE PLASTIC BAG					
	8607-013	Terminal Block	X	X	X
	8611-006	Ground Terminal	X	X	X
	4111-100	Wiring Diagram	X		
	4111-101	Wiring Diagram		X	
	4111-102	Wiring Diagram			X

NS = Not Shown

FUNCTIONAL COMPONENTS – B SERIES

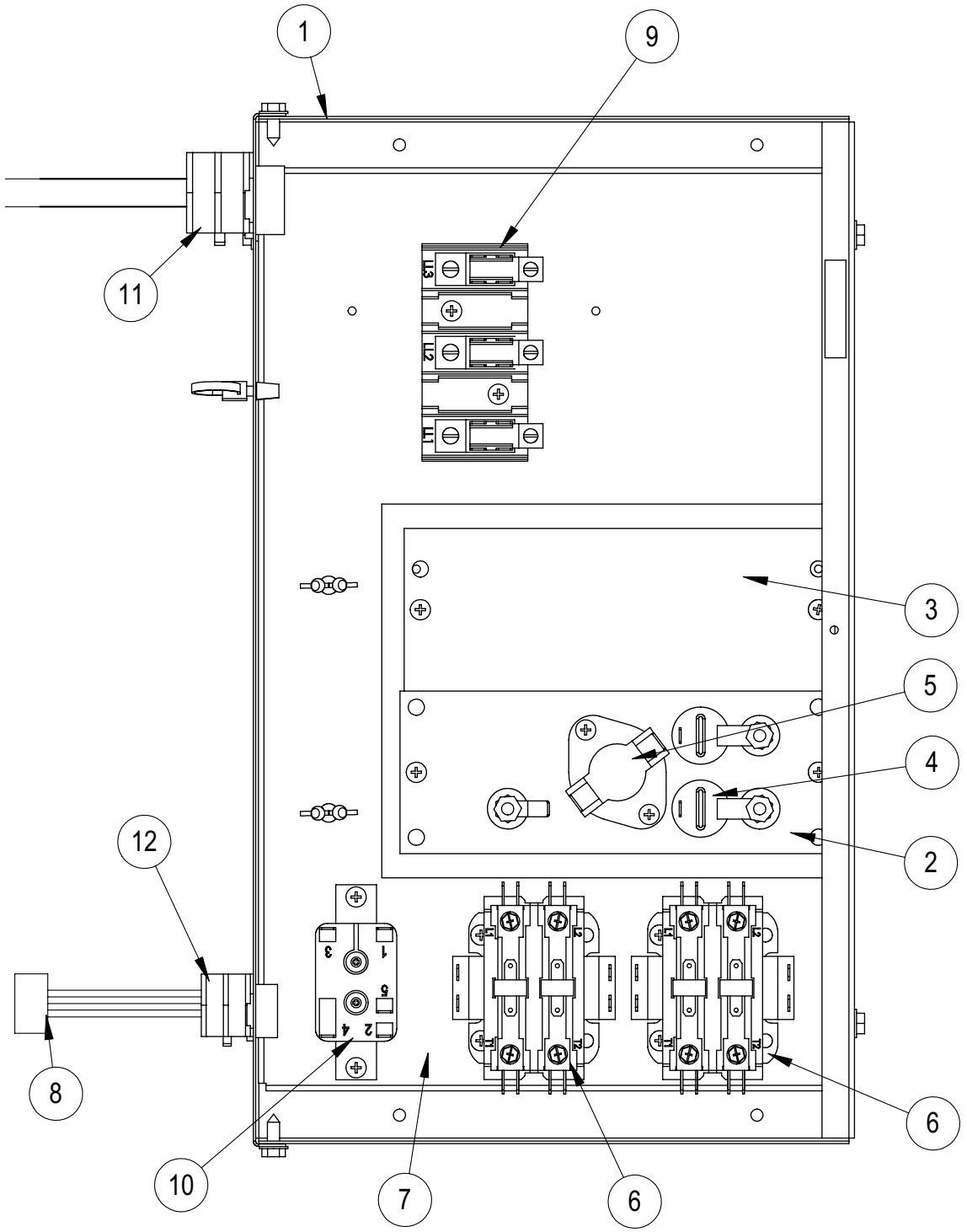

SEXP-476

Drawing No.	Part No.	Description	EHP513-B09	EHP513-B15
1	117-270	Heater Box Assembly	X	X
2	8604-096	Heat Strip 15 KW 240V 6 Terminal	X	X
2	8604-049	Heat Strip 6 KW 240V		X
3	136-091	Fill Plate	X	
4	8402-114	Thermal Cutoff	2	4
5	8402-083	Limit Control		X
5	8402-082	Limit Control	X	
6	8401-006	Contactor	X	2
7	117-269	Heater Box Plate	X	X
8	3000-1243	Wire Assembly		X
8	3000-1242	Wire Assembly	X	
9	8607-014	Terminal Block	X	X
10	8201-062	Blower Interlock Relay	X	X
11	8611-052	Plastic Connector	X	X
12	8611-046	1/2 Plastic Connector	X	X
NS	133-192	Hinged Heater Box Cover	X	X
THE FOLLOWING PARTS CONTAINED IN THE PLASTIC BAG				
	8607-014	Terminal Block	X	X
	8611-006	Ground Terminal	X	X
	4111-200	Wiring Diagram	X	
	4111-201	Wiring Diagram		X

NS = Not Shown

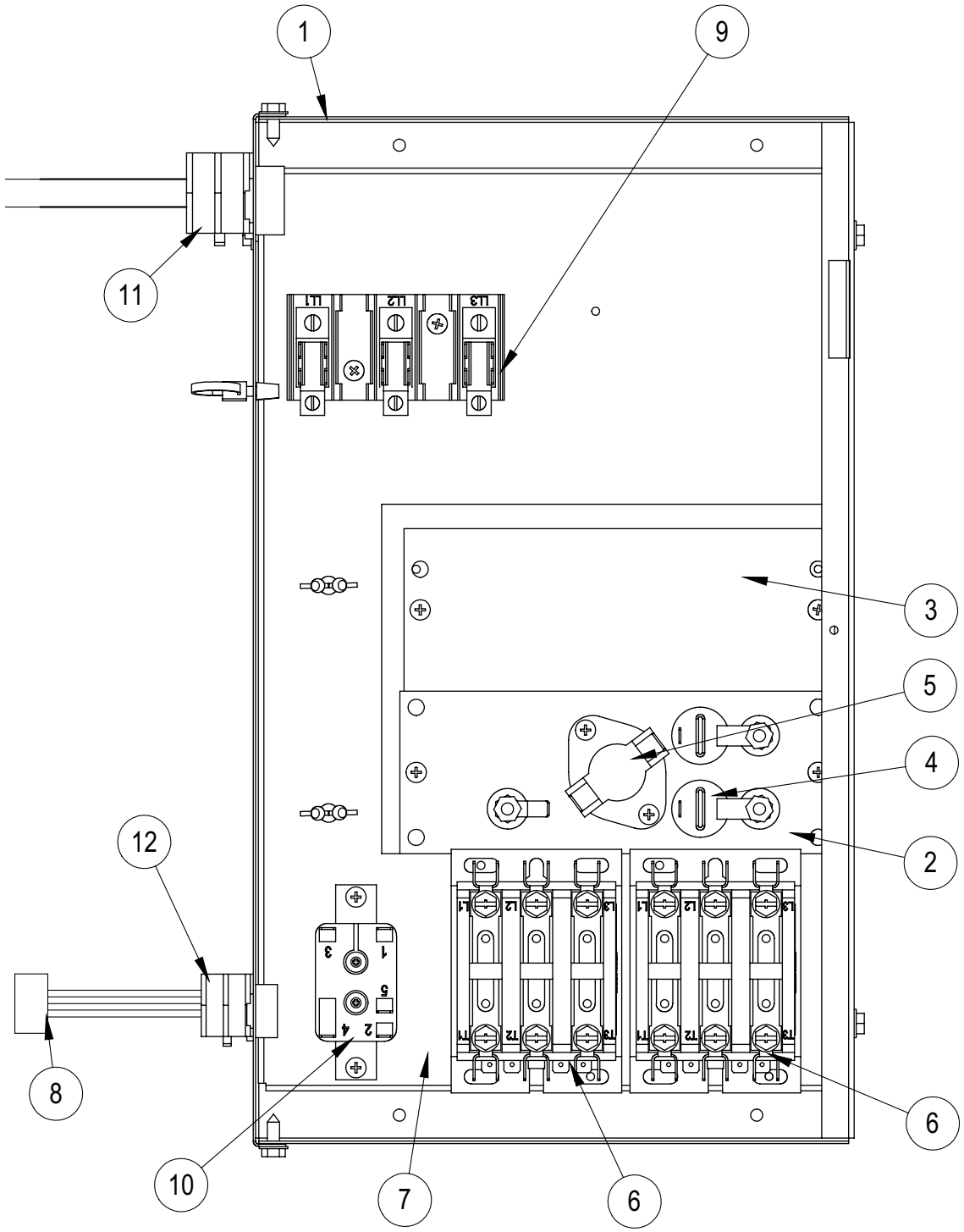

SEXP-488

Drawing No.	Part No.	Description	EHP513-C09	EHP513-C15
1	117-270	Heater Box Assembly	X	X
2	8604-100	Heat Strip 6 KW 480V 3-Terminal	X	X
2	8604-101	Heat Strip 9 KW 480V 3-Terminal	X	X
3	8402-098	200° One Shot	2	4
4	8402-082	Limit Control L145-3.0 1-Pole	X	
4	8402-168	Limit Control L140-2.5 2-Pole		X
5	8401-002	Contactor 3-Pole	X	2
6	117-269	Heater Box Plate	X	X
7	3000-1242	Wire Assembly	X	
7	3000-1243	Wire Assembly		X
8	8607-014	Terminal Block	X	X
9	8607-015	Terminal Block Insulator	X	X
10	8201-062	Blower Interlock Relay	X	X
11	8611-052	Plastic Connector	X	X
12	8611-046	1/2" Plastic Connector	X	X
NS	133-192	Hinged Heater Box Cover	X	X
THE FOLLOWING PARTS CONTAINED IN THE PLASTIC BAG				
	8607-014	Terminal Block	X	X
	8607-015	Terminal Block Insulator	X	X
	8611-006	Ground Terminal	X	X
	4111-300	Wiring Diagram	X	
	4111-301	Wiring Diagram		X

NS = Not Shown