REPLACEMENT PARTS MANUAL

WALL MOUNTED PACKAGE AIR CONDITIONER

MODELS: WA302, WA361, WA372H

NOTICE
Document contains Sticky Notes – Open with Acrobat Reader DC or later.

General Notes

- Revised and/or additional pages may be issued from time to time.
- A complete and current manual consists of pages shown in the following contents section.

Important

- Contact the installing and/or local Bard distributor for all parts requirements. Make sure you have the complete model and serial number available from the unit rating plates.

Contents

Description — Page

Cabinet Components
- Exploded View 2
- Usage List 3
- Usage List 4
- Blank Page 5

Functional Components
- Exploded View 6
- Usage List 7
- Usage List 8
- Blank Page 9

Control Panel
- Exploded View 10
- Usage List 11
- Exploded View 12
- Usage List 13

Blower Assembly
- Exploded View 14
- Usage List 14

CLIMATE CONTROL SOLUTIONS

Bard Manufacturing Company, Inc.
Bryan, Ohio 43506

Since 1914...Moving ahead, just as planned.

Manual: 2110-409O
Supersedes: 2110-409N
File: 2150-004, Tab 16
Date: 12-04-07

CABINET COMPONENTS

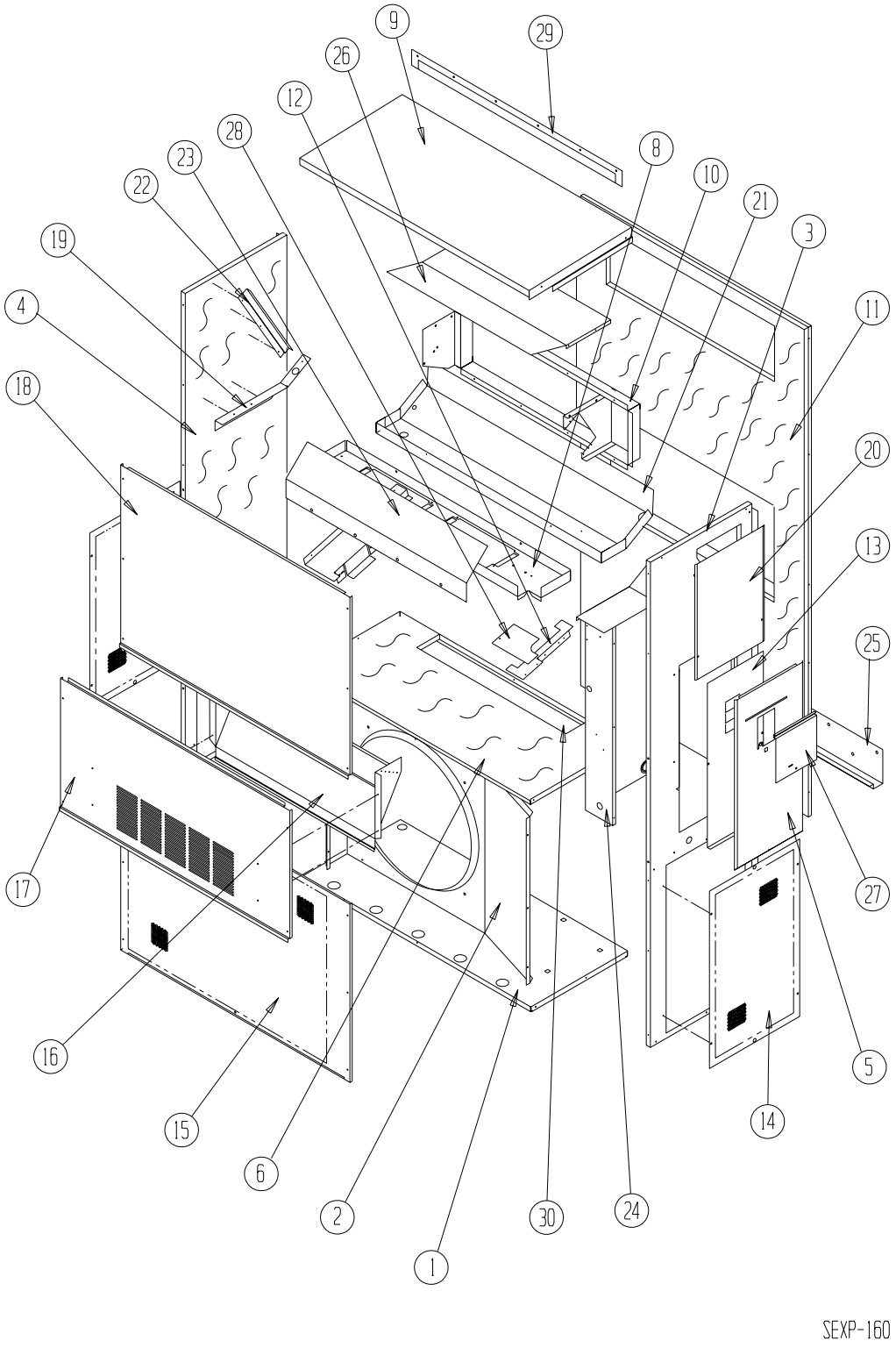

This Drawing is referenced on Pages 3 and 4

Drawing No.	Part No.	Description	WA302-A,B,D	WA302-C	WA302-F	WA361-A,B,D,E	WA361-C	WA361-F	WA361HA,B	WA361HC	WA361HF	WA372HD
1	S127-199	Lower Base	X	X	X	X	X	X	X	X	X	X
2	125-022	Fan Shroud	X	X	X	X	X	X	X	X	X	X
3	S500-228-* ①	Right Side	X	X	X	X	X	X	X	X	X	X
4	S500-229-* ①	Left Side	X	X	X	X	X	X	X	X	X	X
5	S533-109-* ①	Control Panel Cover (Outer)	X	X	X	X	X	X	X	X	X	X
6	S521X384	Condenser Partition	X	X	X	X	X	X	X	X	X	X
8	121X182	Blower Partition	X	X	X	X	X	X	X	X	X	X
9	S506-130-* ①	Top	X	X	X	X	X	X	X	X	X	X
10	S111X030	Outlet Airframe Assembly	X	X	X	X	X	X	X	X	X	X
11	S508-088	Back	X	X	X	X	X	X	X	X	X	X
12	113X195	Filter Bracket	2	2	2	2	2	2	2	2	2	2
13	S132-104	Control Panel Cover (Inner)	X			X			X			X
13	S132-172	Control Panel Cover (Inner)		X	X		X	X		X	X	
14	118-056-* ①	Side Grille	2	2	2	2	2	2	2	2	2	2
15	118-059-* ①	Condenser Grille	X	X	X	X	X	X	X	X	X	X
16	BFAD-3	Fresh Air Damper Assembly	X	X	X	X	X	X	X	X	X	X
17	S552-206-* ①	Service Door	X	X	X	X	X	X	X	X	X	X
18	S514-072-* ①	Upper Front	X	X	X	X	X	X	X	X	X	X
19	105X850	Left Side Support	X	X	X	X	X	X	X	X	X	X
20	S143-034-* ①	Right Side Cover Plate (Outer)	X	X	X	X	X	X	X	X	X	X
21	S123-078	Drain Pan	X	X	X	X	X	X	X	X	X	X
22	147-044	Evaporator Support	X	X	X	X	X	X	X	X	X	X
23	135-124	Air Baffle	X	X	X	X	X	X	X	X	X	X
24	Control Panel Assembly	See Control Panel Assembly Drawing and Parts List	X	X	X	X	X	X	X	X	X	X
25	113-140	Bottom Mounting Bracket	1	1	1	1	1	1	1	1	1	1
26	135X123	Heat Shield	X	X	X	X	X	X	X	X	X	X
27	S153-218-* ①	Disconnect Access Door	X	X	X	X	X	X	X	X	X	X
28	137-259	Fill Plate	X	X	X	X	X	X	X	X	X	X
29	113-149-* ①	Top Rain Flashing	X	X	X	X	X	X	X	X	X	X

① NOTE: Exterior cabinet parts are manufactured with various paint color options. To insure that you receive the proper paint color, you must include the complete model and serial number of the unit for which cabinet parts are being ordered.

This Table references Exploded View on Page 2

CABINET COMPONENTS

Drawing No.	Part No.	Description	WA301DA, DB	WA301DC	WA361DA, DB	WA361DC
1	S127-199	Lower Base	X	X	X	X
2	125-022	Fan Shroud	X	X	X	X
3	S500-228-* ①	Right Side	X	X	X	X
4	S500-229-* ①	Left Side	X	X	X	X
5	S533-109-* ①	Control Panel Cover (Outer)	X	X	X	X
6	S521X384	Condenser Partition	X	X	X	X
8	121X182	Blower Partition	X	X	X	X
9	S506-130-* ①	Top	X	X	X	X
10	S111X030	Outlet Airframe Assembly	X	X	X	X
11	S508-088	Back	X	X	X	X
12	113X195	Filter Bracket	2	2	2	2
13	S132-104	Control Panel Cover (Inner)	X		X	
13	S132-172	Control Panel Cover (Inner)		X		X
14	118-056-* ①	Side Grille	2	2	2	2
15	118-059-* ①	Condenser Grille	X	X	X	X
16	BFAD-3	Fresh Air Damper Assembly	X	X	X	X
17	S552-206-* ①	Service Door	X	X	X	X
18	S514-072-* ①	Upper Front	X	X	X	X
19	105X850	Left Side Support	X	X	X	X
20	S143-034-* ①	Right Side Cover Plate (Outer)	X	X	X	X
21	S123-078	Drain Pan	X	X	X	X
22	147-044	Evaporator Support	X	X	X	X
23	135-124	Air Baffle	X	X	X	X
24	Control Panel Assembly	See Control Panel Assembly Drawing and Parts List	X	X	X	X
25	113-140	Bottom Mounting Bracket	1	1	1	1
26	135X123	Heat Shield	X	X	X	X
27	S153-218-* ①	Disconnect Access Door	X	X	X	X
28	137-259	Fill Plate	X	X	X	X
29	113-149-* ①	Top Rain Flashing	X	X	X	X

① *NOTE: Exterior cabinet parts are manufactured with various paint color options. To insure that you receive the proper paint color, you must include the complete model and serial number of the unit for which cabinet parts are being ordered.*

This Table references Exploded View on Page 2

This page has been left blank intentionally.

FUNCTIONAL COMPONENTS

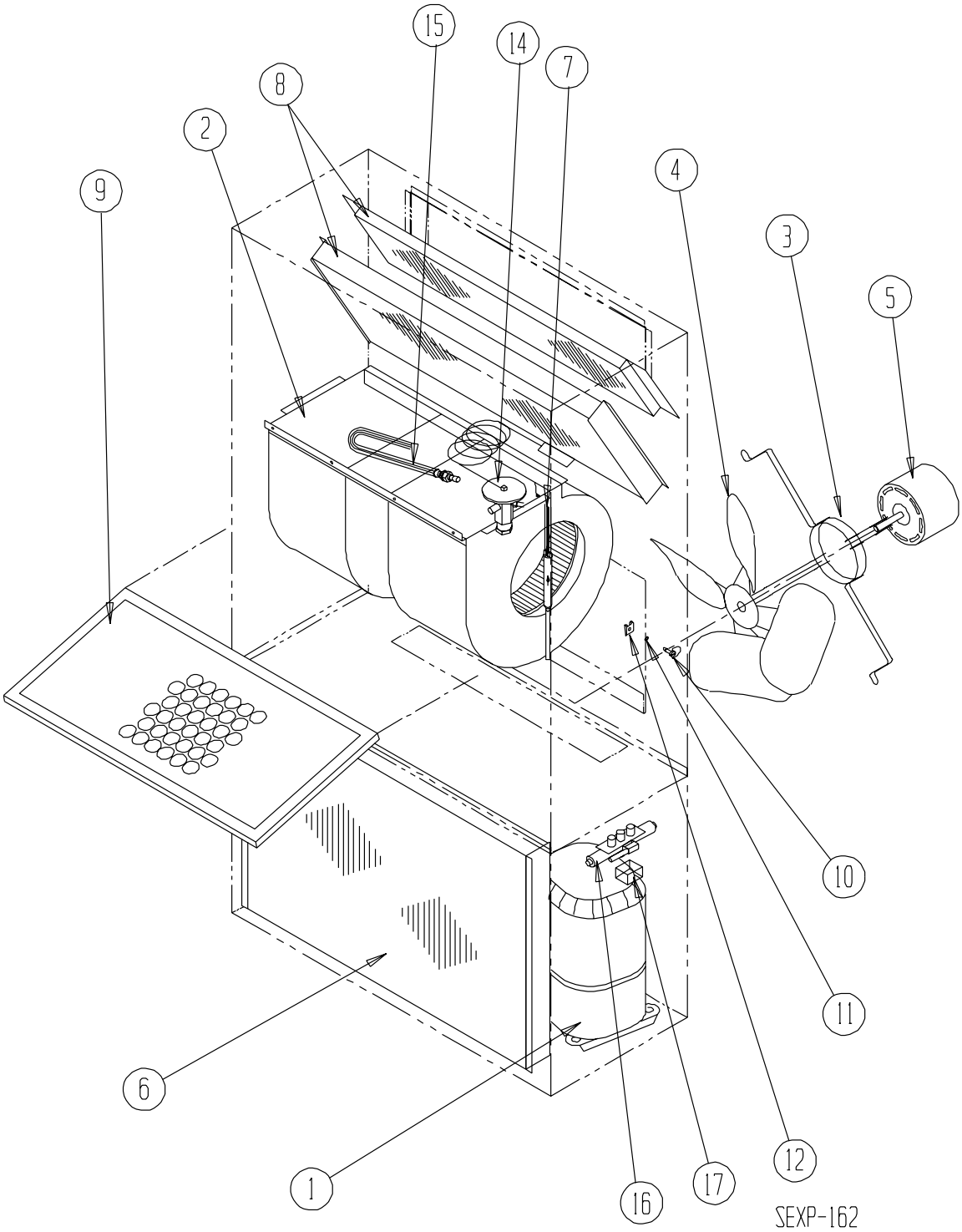

This Drawing is referenced on Pages 7 and 8

Drawing No.	Part No.	Description	WA302-A	WA302-B	WA302-C	WA302-D	WA302-F	WA361-A	WA361-B	WA361-C	WA361-D	WA361-E	WA361-F	WA361HA	WA361HB	WA361HC	WA361HF	WA372HD
1	8000-125	Compressor						X						X				X
1	8000-132	Compressor	X															
1	8000-133	Compressor							X			X			X			
1	8000-134	Compressor								X			X			X	X	
1	8000-135	Compressor		X														
1	8000-136	Compressor			X		X											
1	8000-144	Compressor				X												
1	8000-145	Compressor									X							
1	8000-226	Compressor																
2	S900-179	Blower Assembly	X	X		X	X	X	X		X	X	X	X	X		X	X
2	S900-180	Blower Assembly			X					X						X		
3	8200-001	Fan Motor Mount	X	X	X	X	X	X	X	X	X	X	X	X	X	X	X	X
4	5151-045	Fan Blade	X	X	X	X	X	X	X	X	X	X	X	X	X	X	X	X
5	8103-013	Condenser Motor	X	X		X	X	X	X		X	X	X	X	X		X	X
5	8103-020	Condenser Motor			X					X						X		
6	5051-066BX	Condenser Coil					X	X	X	X	X	X	X	X	X	X	X	X
6	5051-068BX	Condenser Coil	X	X	X	X												
7	800-0185	Cooling Capillary Assembly					X	X	X	X	X	X	X					
7	800-0184	Cooling Capillary Assembly	X	X	X	X												
8	5060-064BX	Evaporator Coil	X	X	X	X	X	X	X	X	X	X	X	X	X	X	X	X
9	7004-019	Air Filter 1" Throwaway	X	X	X	X	X	X	X	X	X	X	X	X	X	X	X	X
9	7003-031	Air Filter 1" Washable ①	X	X	X	X	X	X	X	X	X	X	X	X	X	X	X	X
9	7004-026	Air Filter 2" Pleated ①	X	X	X	X	X	X	X	X	X	X	X	X	X	X	X	X
10	1171-022	1/4" Turn Fastener	X	X	X	X	X	X	X	X	X	X	X	X	X	X	X	X
11	1171-024	1/4" Turn Retainer	X	X	X	X	X	X	X	X	X	X	X	X	X	X	X	X
12	1171-023	1/4" Receptacle	X	X	X	X	X	X	X	X	X	X	X	X	X	X	X	X
NS	1804-0106	High Pressure Switch (Flr) ①	X	X	X	X	X	X	X	X	X	X	X	X	X	X	X	X
NS	1804-0107	Low Pressure Switch (Flr) ①	X	X	X	X	X	X	X	X	X	X	X	X	X	X	X	X
NS	CMA-6	Low Ambient Control (Flr) ①	X	X	X	X	X	X	X	X	X	X	X					
NS	5201-001	Filter Drier												X	X	X	X	X
NS	5201-014	Sight Glass												X	X	X	X	X
NS	5202-022	Accumulator												X	X	X	X	X
NS	5203-004	Receiver												X	X	X	X	X
NS	5651-051	Shut-Off Valve												X	X	X	X	X
NS	5651-096	Hot Gas Bypass Valve												X	X	X	X	X
NS	5651-097	Head Pressure Control Valve												X	X	X	X	X
NS	5651-098	Distributor												X	X	X	X	X
NS	5651-100	TXV												X	X	X	X	X

NS – Not Shown
① – Optional

This Table references Exploded View on Page 6

FUNCTIONAL COMPONENTS

Drawing No.	Part No.	Description	WA301DA	WA301DB	WA301DC	WA361DA	WA361DB	WA361DC
1	8000-125	Compressor				X		
1	8000-132	Compressor	X					
1	8000-133	Compressor					X	
1	8000-134	Compressor						X
1	8000-135	Compressor		X				
1	8000-136	Compressor			X			
2	S900-179	Blower Assembly	X	X		X	X	
2	S900-180	Blower Assembly			X			X
3	8200-001	Fan Motor Mount	X	X	X	X	X	X
4	5151-045	Fan Blade	X	X	X	X	X	X
5	8103-013	Condenser Motor	X	X		X	X	
5	8103-020	Condenser Motor			X			X
6	5051-066BX	Condenser Coil	X	X	X	X	X	X
8	917-0043BX	Evaporator Coil	X	X	X	X	X	X
9	7004-019	Air Filter 1" Throwaway	X	X	X	X	X	X
9	7003-031	Air Filter 1" Washable ①	X	X	X	X	X	X
9	7004-026	Air Filter 2" Pleated ①	X	X	X	X	X	X
10	1171-022	1/4" Turn Fastener	X	X	X	X	X	X
11	1171-024	1/4" Turn Retainer	X	X	X	X	X	X
12	1171-023	1/4" Receptacle	X	X	X	X	X	X
14	5651-071	TXV	X	X	X	X	X	X
15	5625-015	Distributor	X	X	X	X	X	X
16	5650-026	Three Way Valve	X	X	X	X	X	X
17	5650-027	Solenoid	X	X	X	X	X	X
NS	1804-0106	High Pressure Switch (Flr) ①	X	X	X	X	X	X

NS – Not Shown
① – Optional

This Table references Exploded View on Page 6

This page has been left blank intentionally.

CONTROL PANEL

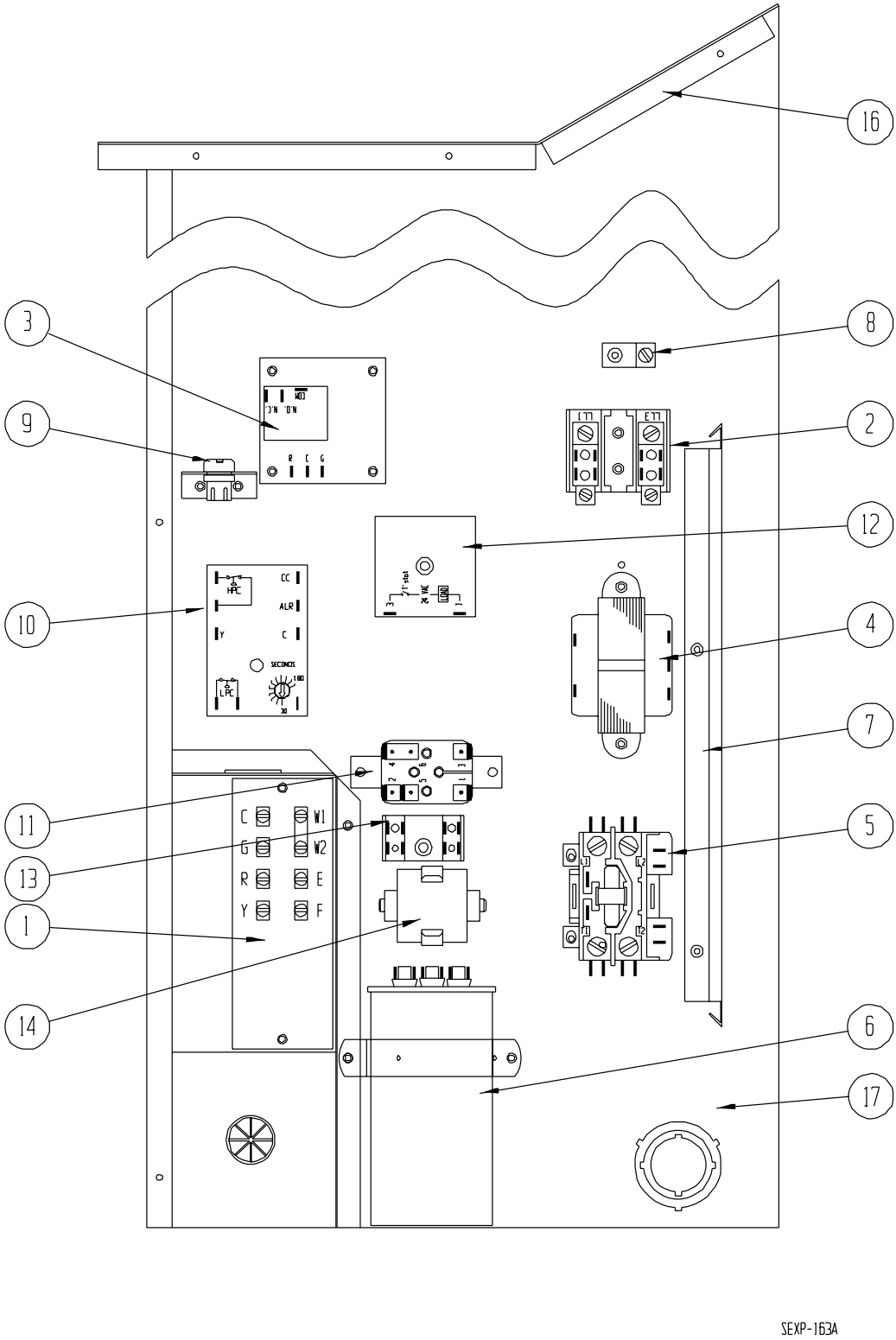

Drawing No.	Part No.	Description	WA302-A	WA302-B	WA302-C	WA302-D	WA302-F	WA361-A, WA361HA	WA361-B, WA361HB	WA361-C, WA361HC	WA361-D	WA361-E	WA361-F, WA361HF	WA372HD
1	8607-020	Low Voltage Terminal Strip	X	X	X	X	X	X	X	X	X	X	X	X
2	8607-013	Terminal Block 2 Pole	X			X	2	X			X		2	X
2	8607-014	Terminal Block 3 Pole		X	X				X	X		X		
2	8607-015	Phenolic Insulator			X		2			X			2	
3	8201-056	Blower Control	X	X		X	X	X	X		X	X	X	X
3	8201-032	Blower Relay			X					X				
4	8407-034	Transformer	X	X		X	X	X	X		X	X	X	X
4	8407-042	Transformer			X					X				
4	8407-048	Transformer ②												X
5	8401-007	Compressor Contactor	X			X		X			X			X
5	8401-002	Compressor Contactor		X	X		X		X	X	X	X	X	
6	8552-048	Compressor Capacitor	X			X								
6	8552-050	Compressor Capacitor						X			X			
6	8552-002	Outdoor Motor Capacitor		X	X		X		X	X		X	X	
6	8552-063	Compressor Capacitor												X
7	135-122	Wire Shield	X	X	X	X	X	X	X	X	X	X	X	X
8	8611-006	Ground Terminal	X	X	X	X	X	X	X	X	X	X	X	X
9	3000-968	6 Pin Connector	X	X	X	X	X	X	X	X	X	X	X	X
10	8201-088	Compressor Control Module (Optional)	X	X	X	X	X	X	X	X	X	X	X	X
11	8201-062	Alarm Relay (Optional)	X	X	X	X	X	X	X	X	X	X	X	X
12	8201-050	Compressor TDR (Optional)	X	X	X	X	X	X	X	X	X	X	X	X
13	8607-017	Terminal Block (Optional)	X	X	X	X	X	X	X	X	X	X	X	X
14	8551-005	Start Device (PTCR) (Optional)	X	X	X	X	X	X	X	X	X	X	X	X
16	117X137	Control Panel Top	X	X	X	X	X	X	X	X	X	X	X	X
17	117X123	Control Panel	X	X	X	X	X	X	X	X	X	X	X	X
NS	8615-038	Circuit Breaker 35A 2 Pole (Opt) ①		X			X		X			X		
NS	8615-054	Circuit Breaker 20A 2 Pole (Opt) ①		X										
NS	8615-053	Pull Disconnect (Optional) ①			X		X			X			X	
NS	8615-051	Circuit Breaker 25A 3 Pole (Opt) ①								X			X	
NS	4095-130	Wiring Diagram	X			X		X			X			X
NS	4095-228	Wiring Diagram		X					X			X		
NS	4095-319	Wiring Diagram			X					X				
NS	4095-621	Wiring Diagram					X						X	

① Circuit breakers listed are for units without electric heat, "0Z" models. Hot gas bypass models not available without electric heat. See Heater Replacement Parts Manual for units with electric heat.

② Used with D088 unit.

CONTROL PANEL

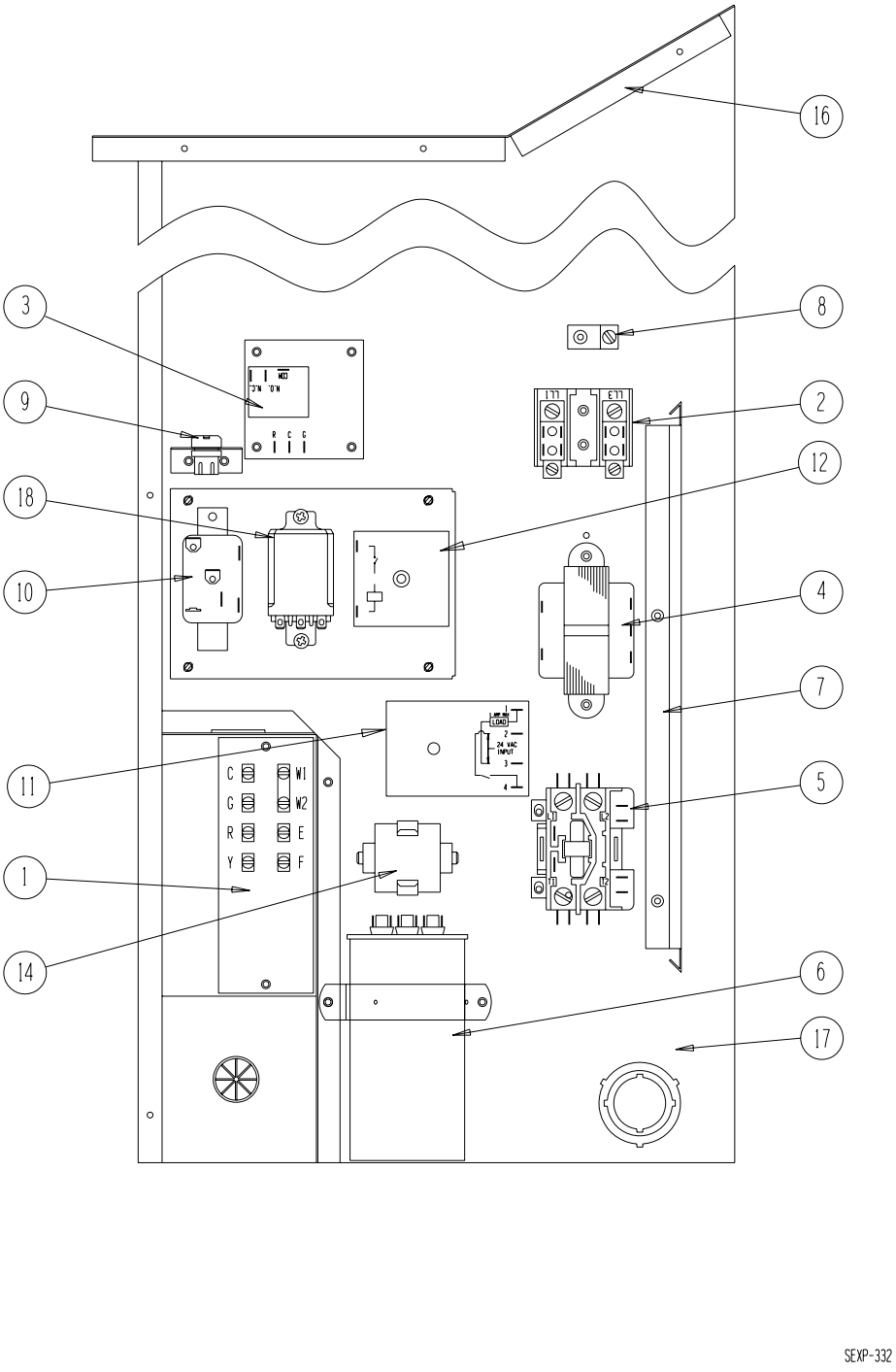

Drawing No.	Part No.	Description	WA301DA	WA361DA	WA301DB	WA361DB	WA301DC, WA361DC
1	8607-020	Low Voltage Terminal Strip	X	X	X	X	X
2	8607-013	Terminal Block 2 Pole	X	X			
2	8607-014	Terminal Block 3 Pole			X	X	X
2	8607-015	Phenolic Insulator					X
3	8201-056	Blower Control	X	X	X	X	
3	8201-032	Blower Relay					X
4	8407-035	Transformer	X	X	X	X	
4	8407-042	Transformer					X
5	8401-007	Compressor Contactor	X	X			
5	8401-002	Compressor Contactor			X	X	X
6	8552-050	Compressor Capacitor		X			
6	8552-002	Outdoor Motor Capacitor			X	X	X
6	8552-048	Compressor Capacitor	X				
7	135-122	Wire Shield	X	X	X	X	X
8	8611-006	Ground Terminal	X	X	X	X	X
9	3000-968	6 Pin Connector	X	X	X	X	X
10	8201-009	Relay SPDT	X	X	X	X	X
11	8201-089	Compressor TDR 10 sec. off delay	X	X	X	X	X
12	8201-050	Compressor TDR 5 min. delay on break	X	X	X	X	X
14	8551-005	Start Device (PTCR) (Optional)	X	X	X	X	X
16	117X137	Control Panel Top	X	X	X	X	X
17	117X123	Control Panel Top	X	X	X	X	X
18	8201-071	Relay 3PDT	X	X	X	X	X
NS	8615-038	Circuit Breaker 35A 2 Pole (Opt) ①	X	X			
NS	8615-051	Circuit Breaker 25A 3 Pole (Opt) ①				X	
NS	8615-054	Circuit Breaker 20A 3 Pole (Opt) ①			X		
NS	8615-053	Pull Disconnect w/o Elec. Heat (Opt) ①					X
NS	4095-118	Wiring Diagram	X	X			
NS	4095-221	Wiring Diagram			X	X	
NS	4095-315	Wiring Diagram					X

① Circuit breakers listed are for units without electric heat, "0Z" models. Hot gas bypass models not available without electric heat. See Heater Replacement Parts Manual for units with electric heat.

BLOWER ASSEMBLY
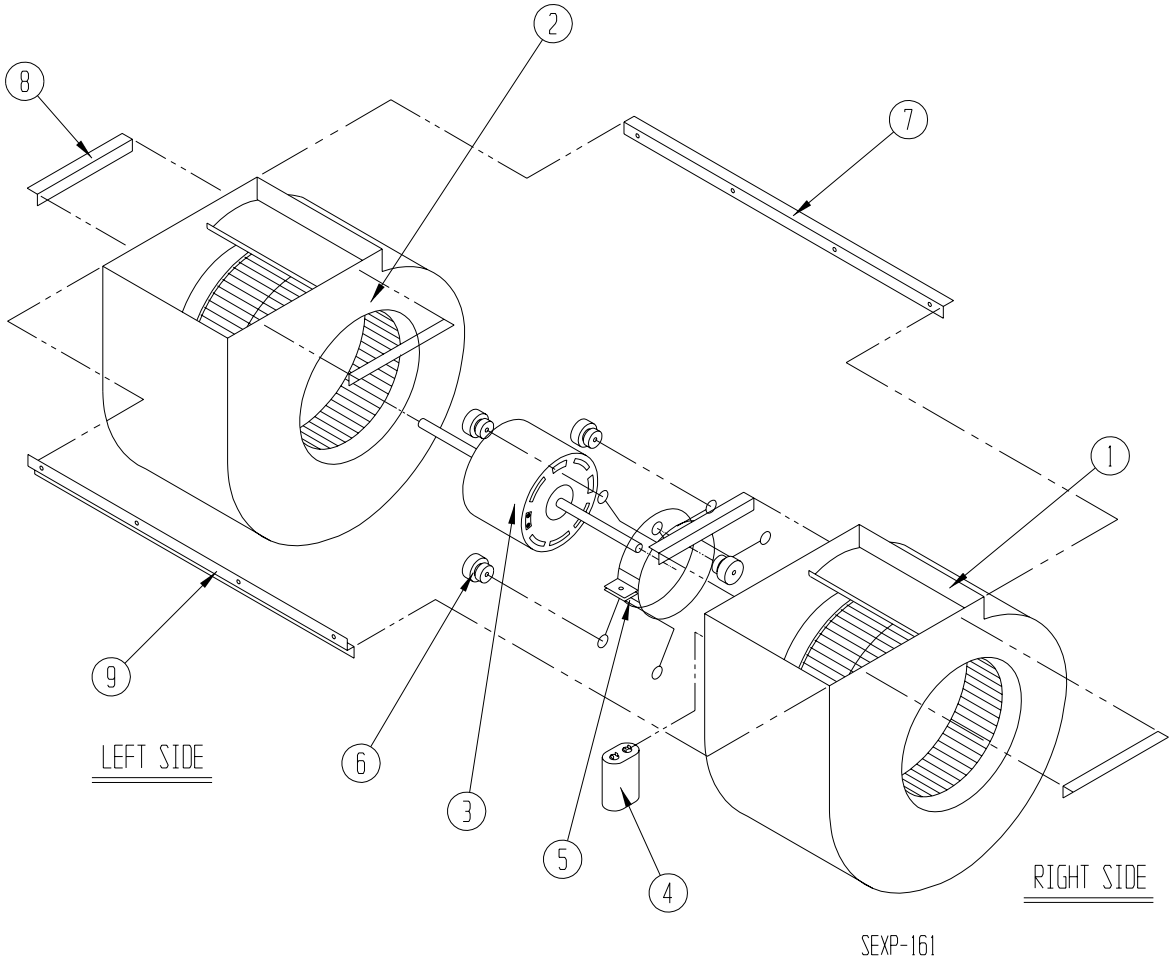
Drawing No.	Part No.	Description	900-179	900-180
1	5152-051	Housing, Wheel and Cutoff (CW)	X	X
2	5152-052	Housing, Wheel and Cutoff	X	X
3	8105-029	Blower Motor (230/208)	X	
3	8105-033	Blower Motor (460)		X
4	8552-002	Capacitor	X	X
5	8200-031	Motor Mount	X	X
6	5451-011	Grommets	6	6
7	105-870	Back Brace	X	X
8	105-868	Side Angle	4	4
9	103-401	Front Brace	X	X