REPLACEMENT PARTS MANUAL

WALL MOUNTED PACKAGE AIR CONDITIONER

Models: W42A1 W42A1D
W48A1 W48A1D
W60A1 W60A1D

NOTICE
Document contains Sticky Notes – Open with Acrobat Reader DC or later.

General Notes

- Revised and/or additional pages may be issued from time to time.
- A complete and current manual consists of pages shown in the following contents section.

Important

- Contact the installing and/or local Bard distributor for all parts requirements. Make sure you have the complete model and serial number available from the unit rating plates.

Contents

Description — Page

Cabinet Components
- Exploded View 2
- Usage List 3
- Usage List 4

Functional Components
- Exploded View 5
- Usage List 6
- Usage List 7

Control Panel
- Exploded View 8
- Usage List 9
- Usage List 10
- Blank Page 11
- Exploded View 12
- Usage List 13

Blower Assembly
- Exploded View 14
- Usage List 14

Bard Manufacturing Company, Inc.
Bryan, Ohio 43506

Since 1914...Moving ahead, just as planned.

CLIMATE CONTROL SOLUTIONS

Manual: 2110-481A
Supersedes: 2110-481
File: Tab 16
Date: 10-14-08

© Copyright 2008

CABINET COMPONENTS

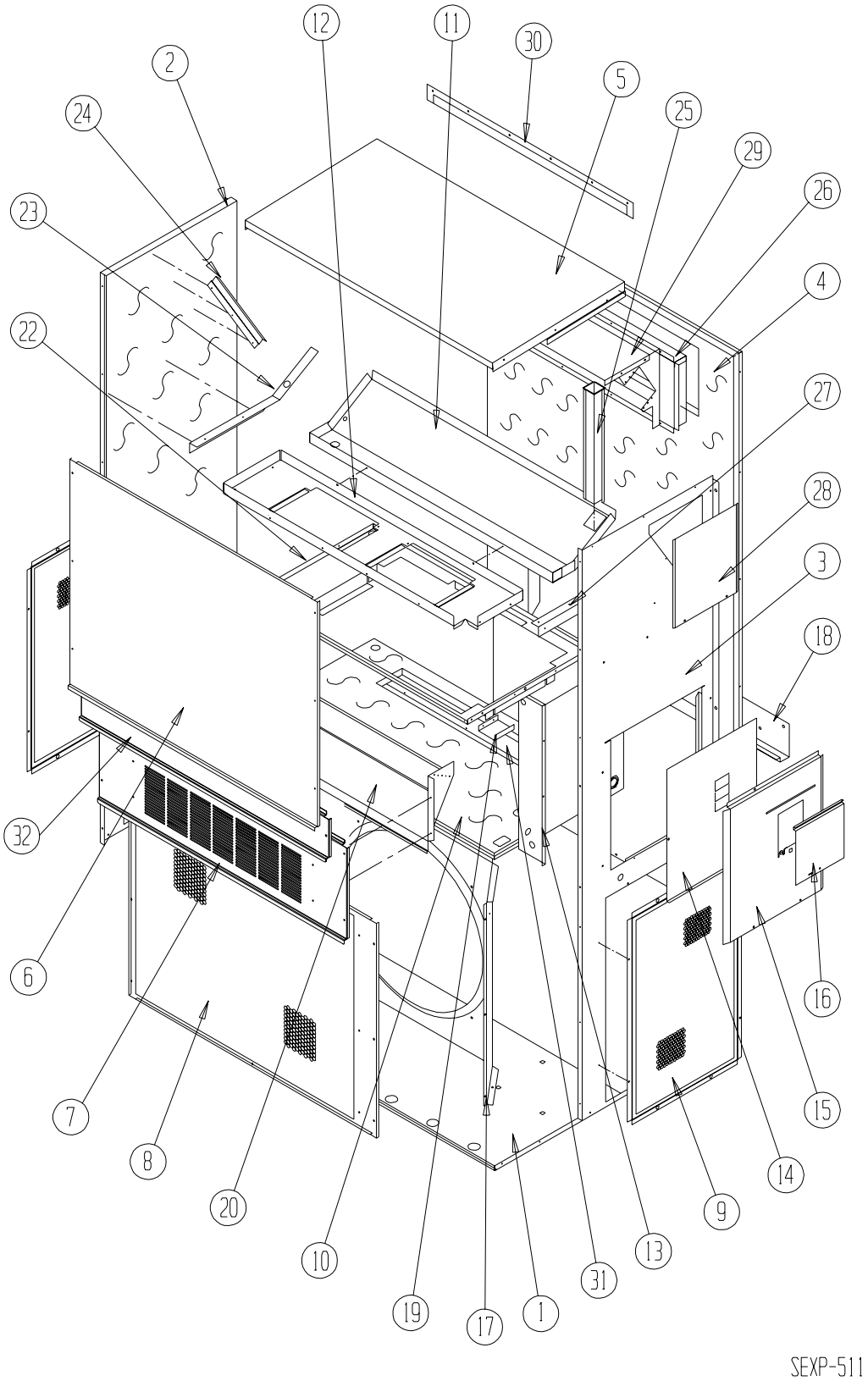

This drawing is referenced in Tables on Pages 3 and 4

CABINET COMPONENTS

Dwg. No.	Part Number	Description	W42A1-A, B, E	W42A1-C, F	W42A1DA, B	W42A1DC	W48A1-A, B, E	W48A1-C, F	W48A1DA, B	W48A1DC
1	S127X214	Lower Base	X	X	X	X	X	X	X	X
1	S127X369 ③	Lower Base	X	X	X	X	X	X	X	X
2	S500-262-* ①	Left Side	X	X	X	X	X	X	X	X
2	S500-464 ②	Left Side	X	X	X	X	X	X	X	X
2	S500X516 ③	Left Side	X	X	X	X	X	X	X	X
3	S500-261-* ①	Right Side	X	X	X	X	X	X	X	X
3	S500-463 ②	Right Side	X	X	X	X	X	X	X	X
3	S500-517 ③	Right Side	X	X	X	X	X	X	X	X
4	S508-098	Back	X	X	X	X	X	X	X	X
4	S508-191 ②	Back	X	X	X	X	X	X	X	X
4	S508-221 ③	Back	X	X	X	X	X	X	X	X
5	S506-142-* ①	Top	X	X	X	X	X	X	X	X
5	S506-251 ②	Top	X	X	X	X	X	X	X	X
5	S506-274 ③	Top	X	X	X	X	X	X	X	X
6	S515-144-* ①	Upper Front	X	X	X	X	X	X	X	X
6	S514-142 ②	Upper Front	X	X	X	X	X	X	X	X
6	S514-162 ③	Upper Front	X	X	X	X	X	X	X	X
7	S553-383-* ①	Vent Option Door	X	X	X	X	X	X	X	X
7	S553-408-* ①	Vent Option Door with ERV	X	X	X	X	X	X	X	X
7	S552-456 ②	Vent Option Door	X	X	X	X	X	X	X	X
7	S553-449 ③	Vent Option Door	X	X	X	X	X	X	X	X
8	118-048-* ①	Condenser Grille	X	X	X	X	X	X	X	X
8	118-064 ②	Condenser Grille	X	X	X	X	X	X	X	X
8	118-072 ③	Condenser Grille	X	X	X	X	X	X	X	X
9	118-057-* ①	Side Grille	2	2	2	2	2	2	2	2
9	118-063 ②	Side Grille	2	2	2	2	2	2	2	2
9	118-073 ③	Side Grille	2	2	2	2	2	2	2	2
10	S521X258	Condenser Partition	X	X	X	X	X	X	X	X
11	S123-102	Drain Pan	X	X	X	X	X	X	X	X
12	121X216	Blower Partition	X	X	X	X	X	X	X	X
13	Control Panel Assembly	See Control Panel Assembly Drawing and Parts List	X	X	X	X	X	X	X	X
14	S132-114	Control Panel Cover (Inner)	X		X		X		X	
14	S132-171	Control Panel Cover (Inner)		X		X		X		X
15	S533-113-* ①	Control Panel Cover (Outer)	X	X	X	X	X	X	X	X
15	S533-185 ②	Control Panel Cover (Outer)	X	X	X	X	X	X	X	X
15	S533X195 ③	Control Panel Cover (Outer)	X	X	X	X	X	X	X	X
16	S153-218-* ①	Disconnect Access Door	X	X	X	X	X	X	X	X
16	S153-387 ②	Disconnect Access Door	X	X	X	X	X	X	X	X
16	S153-405 ③	Disconnect Access Door	X	X	X	X	X	X	X	X
17	125-024	Fan Shroud	X	X	X	X	X	X	X	X
18	113-140	Bottom Mounting Bracket	X	X	X	X	X	X	X	X
19	137-209	Fill	X	X	X	X	X	X	X	X
20	BFAD-5	Fresh Air Damper Assembly	X	X	X	X	X	X	X	X
22	131X099	Filter Tray	X	X	X	X	X	X	X	X
23	105X877	Left Side Support	X	X	X	X	X	X	X	X
24	147-046	Left Evaporator Support	X	X	X	X	X	X	X	X
25	135-128	Raceway	X	X	X	X	X	X	X	X
26	S111X034	Outlet Air Frame Assembly	X	X	X	X	X	X	X	X
27	105X878	Right Side Support	X	X	X	X	X	X	X	X
28	S143-042-* ①	Right Side Cover Plate (Outer)	X	X	X	X	X	X	X	X
28	S143-105 ②	Right Side Cover Plate (Outer)	X	X	X	X	X	X	X	X
28	S143-125 ③	Right Side Cover Plate (Outer)	X	X	X	X	X	X	X	X
29	135-129	Heat Shield	X	X	X	X	X	X	X	X
30	113-150-* ①	Top Rain Flashing	X	X	X	X	X	X	X	X
30	113-359 ③	Top Rain Flashing	X	X	X	X	X	X	X	X
31	S536-258	Cond. Partition Block Off Plate	X	X	X	X	X	X	X	X
32	S553-384-* ①	Filter Door Assembly	X	X	X	X	X	X	X	X
32	S552-457 ②	Filter Door Assembly	X	X	X	X	X	X	X	X
32	S553-450 ③	Filter Door Assembly	X	X	X	X	X	X	X	X

① *Exterior cabinet parts are manufactured with various paint color options. To insure that you receive the proper paint color, you must include the complete model and serial number of the unit for which cabinet parts are being ordered.*

② *Note: Exterior cabinet parts are manufactured from aluminum Code "A"*

③ *Note: Exterior cabinet parts are manufactured from stainless steel Code "S"*

This Table is references drawing on Page 2

CABINET COMPONENTS

Dwg. No.	Part Number	Description	W60A1-A, B, E	W60A1-C, F	W60A1DA, B	W60A1DC
1	S127X214	Lower Base	X	X	X	X
1	S127X369 ③	Lower Base	X	X	X	X
2	S500-262-* ①	Left Side	X	X	X	X
2	S500-464 ②	Left Side	X	X	X	X
2	S500X516 ③	Left Side	X	X	X	X
3	S500-261-* ①	Right Side	X	X	X	X
3	S500-463 ②	Right Side	X	X	X	X
3	S500-517 ③	Right Side	X	X	X	X
4	S508-098	Back	X	X	X	X
4	S508-191 ②	Back	X	X	X	X
4	S508-221 ③	Back	X	X	X	X
5	S506-142-* ①	Top	X	X	X	X
5	S506-251 ②	Top	X	X	X	X
5	S506-274 ③	Top	X	X	X	X
6	S515-144-* ①	Upper Front	X	X	X	X
6	S514-142 ②	Upper Front	X	X	X	X
6	S514-162 ③	Upper Front	X	X	X	X
7	S552-38[illegible]	Vent Option Door	X	X	X	X
7	S553-40[illegible]	Vent Option Door with ERV	X	X	X	X
7	S552-456 ②	Vent Option Door	X	X	X	X
7	S553-449 ③	Vent Option Door	X	X	X	X
8	118-048-* ①	Condenser Grille	X	X	X	X
8	118-064 ②	Condenser Grille	X	X	X	X
8	118-072 ③	Condenser Grille	X	X	X	X
9	118-057-* ①	Side Grille	2	2	2	2
9	118-063 ②	Side Grille	2	2	2	2
9	118-073 ③	Side Grille	2	2	2	2
10	S521X258	Condenser Partition	X	X	X	X
11	S123-102	Drain Pan	X	X	X	X
12	121X216	Blower Partition	X	X	X	X
13	Control Panel Assy.	See Control Panel Assy. Dwg. & Parts List	X	X	X	X
14	S132-114	Control Panel Cover (Inner)	X		X	
14	S132-171	Control Panel Cover (Inner)		X		X
15	S533-113-* ①	Control Panel Cover (Outer)	X	X	X	X
15	S533-185 ②	Control Panel Cover (Outer)	X	X	X	X
15	S533X195 ③	Control Panel Cover (Outer)	X	X	X	X
16	S153-218-* ①	Disconnect Access Door	X	X	X	X
16	S153-387 ②	Disconnect Access Door	X	X	X	X
16	S153-405 ③	Disconnect Access Door	X	X	X	X
17	125-024	Fan Shroud	X	X	X	X
18	113-140	Bottom Mounting Bracket	X	X	X	X
19	137-209	Fill	X	X	X	X
20	BFAD-5	Fresh Air Damper Assembly	X	X	X	X
22	131X099	Filter Tray	X	X	X	X
23	105X877	Left Side Support	X	X	X	X
24	147-046	Left Evaporator Support	X	X	X	X
25	135-128	Raceway	X	X	X	X
26	S111X034	Outlet Air Frame Assembly	X	X	X	X
27	105X878	Right Side Support	X	X	X	X
28	S143-042-* ①	Right Side Cover Plate (Outer)	X	X	X	X
28	S143-105 ②	Right Side Cover Plate (Outer)	X	X	X	X
28	S143-125 ③	Right Side Cover Plate (Outer)	X	X	X	X
29	135-129	Heat Shield	X	X	X	X
30	113-150-* ①	Top Rain Flashing	X	X	X	X
30	113-359 ③	Top Rain Flashing	X	X	X	X
31	S536-258	Cond. Partition Block Off Plate	X	X	X	X
32	S553-384-* ①	Filter Door Assembly	X	X	X	X
32	S552-457 ②	Filter Door Assembly	X	X	X	X
32	S553-450 ③	Filter Door Assembly	X	X	X	X

① *Exterior cabinet parts are manufactured with various paint color options. To insure that you receive the proper paint color, you must include the complete model and serial number of the unit for which cabinet parts are being ordered.*

② *Note: Exterior cabinet parts are manufactured from aluminum Code "A"*

③ *Note: Exterior cabinet parts are manufactured from stainless steel Code "S"*

This Table is references drawing on Page 2

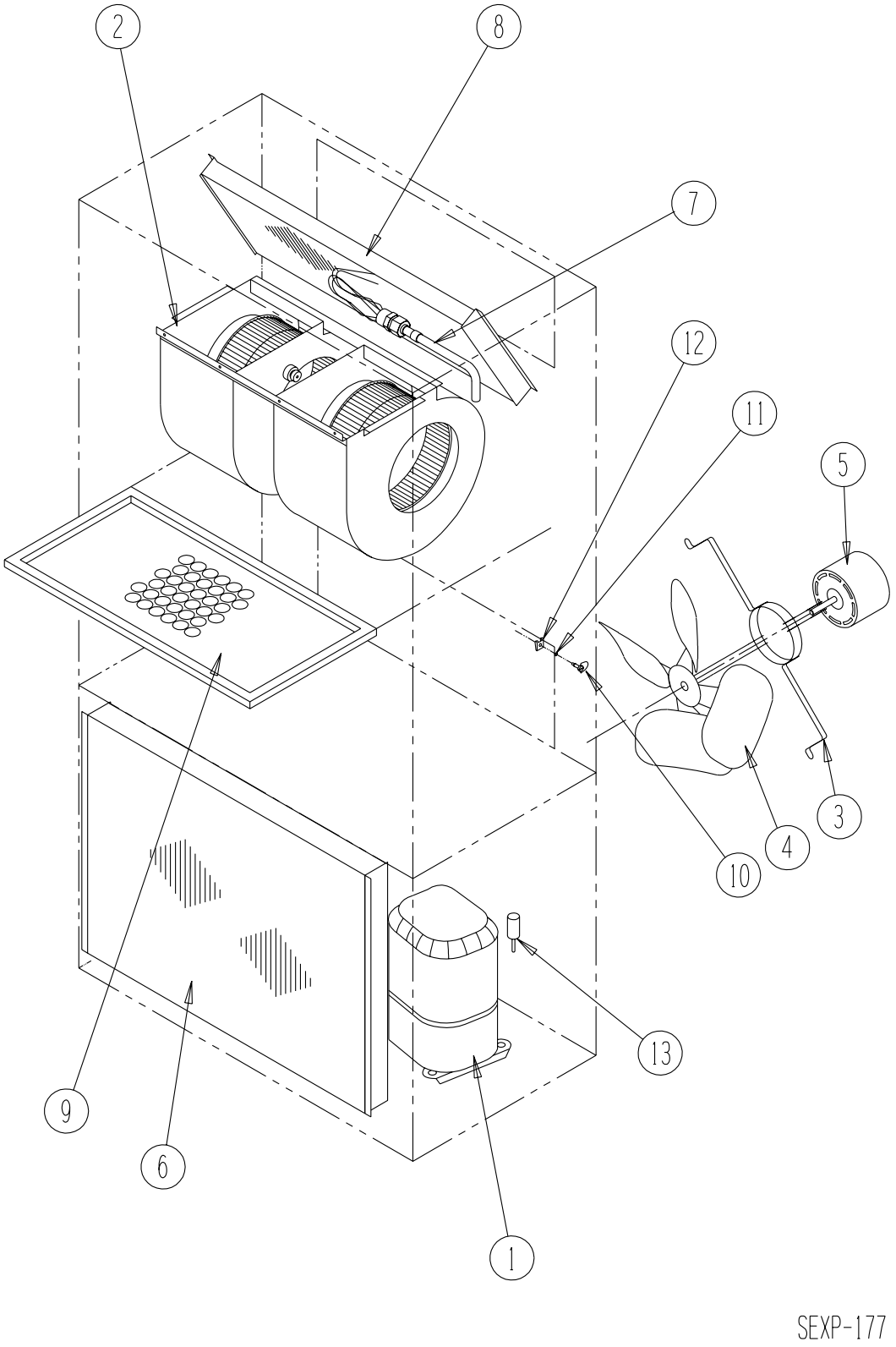

This Exploded View references Tables on Page 6 and 7

FUNCTIONAL COMPONENTS

Dwg. No.	Part Number	Description	W42A1-A	W42A1-B, E	W42A1-C	W42A1-F	W42A1DA	W42A1DB	W42A1DC
1	8000-318	Compressor	X				X		
1	8000-319	Compressor		X				X	
1	8000-320	Compressor			X	X			X
2	S900-183	Blower Assembly	X	X		X	X	X	
2	S900-184	Blower Assembly			X				X
3	8200-004	Fan Motor Mount	X	X	X	X	X	X	X
4	5151-027	Fan Blade	X	X	X	X	X	X	X
5	8105-030	Condenser Motor			X				X
5	8105-039	Condenser Motor	X	X		X	X	X	
6	5051-151BX	Condenser Coil	X	X	X	X	X	X	X
7	5651-01	Expansion Valve Assembly					X	X	X
7	800-0367	Distributor Assembly	X	X	X	X			
8	917-0077BX	Evaporator Coil					X	X	X
8	5060-113BX	Evaporator Coil	X	X	X	X			
9	7004-016	Air Filter 1" Throw-Away	X	X	X	X	X	X	X
9	7003-030	Air Filter 1" Washable	X	X	X	X	X	X	X
9	7004-027	Air Filter 2" Pleated	X	X	X	X	X	X	X
10	1171-022	1/4 Turn Fastener	X	X	X	X	X	X	X
11	1171-024	1/4 Turn Retainer	X	X	X	X	X	X	X
12	1171-023	1/4 Receptacle	X	X	X	X	X	X	X
13	1804-0385	High Pressure Switch (Flare)	X	X	X	X	X	X	X
13	1804-0386	Low Pressure Switch (Flare)	X	X	X	X	X	X	X
NS	5201-002	Filter Drier	X	X	X	X	X	X	X
NS	5650-042	Rev. Valve Solenoid, Red Casing (Ranco)					X	X	X
NS	5650-046	Rev. Valve Solenoid, Black Casing (San Hua)					X	X	X
NS	5650-045	Three-Way Valve with 24V Solenoid Coil					X	X	X
NS	800-0271	Drain Back Capillary					X	X	X
NS	CMA-28	Low Ambient Control (Flare) ①	X	X	X	X			

NS – Not Shown
① – Optional on these models

This Table references Exploded View on Page 5

Dwg. No.	Part Number	Description	W48A1-A	W48A1-B, E	W48A1-C	W48A1-F	W48A1DA	W4A18DB	W48A1DC	W60A1-A	W60A1-B, E	W60A1-C	W60A1-F	W60A1DA	W60A1DB	W60A1DC
1	8000-324	Compressor								X				X		
1	8000-325	Compressor									X				X	
1	8000-322	Compressor		X				X								
1	8000-323	Compressor			X	X			X							
1	8000-321	Compressor	X				X									
1	8000-326	Compressor														X
2	S900-183	Blower Assembly	X	X		X	X	X								
2	S900-184	Blower Assembly			X				X							
2	S900-185	Blower Assembly								X	X			X	X	
2	S900-186	Blower Assembly											X			X
3	8200-004	Fan Motor Mount	X	X	X	X	X	X	X	X	X	X	X	X	X	X
4	5151-027	Fan Blade	X	X	X	X	X	X	X	X	X	X	X	X	X	X
5	8105-030	Condenser Motor			X				X				X			X
5	8105-039	Condenser Motor	X	X		X	X	X		X	X			X	X	
6	5051-151BX	Condenser Coil	X	X	X	X	X	X	X							
6	5051-083BX	Condenser Coil								X	X	X	X	X	X	X
7	800-0369	Distributor Assembly	X	X	X	X										
7	800-0370	Distributor Assembly								X	X	X	X			
7	905-0400	Expansion Valve Assembly					X	X	X							
7	905-0401	Expansion Valve Assembly												X	X	X
8	5060-070BX	Evaporator Coil	X	X	X	X										
8	5060-082BX	Evaporator Coil								X	X	X	X			
8	917-0042BX	Evaporator Coil					X	X	X							
8	917-0044BX	Evaporator Coil												X	X	X
9	7004-016	Air Filter 1" Throw-Away	X	X	X	X	X	X	X	X	X	X	X	X	X	X
9	7003-030	Air Filter 1" Washable	X	X	X	X	X	X	X	X	X	X	X	X	X	X
9	7004-027	Air Filter 2" Pleated	X	X	X	X	X	X	X	X	X	X	X	X	X	X
10	1171-022	1/4 Turn Fastener	X	X	X	X	X	X	X	X	X	X	X	X	X	X
11	1171-024	1/4 Turn Retainer	X	X	X	X	X	X	X	X	X	X	X	X	X	X
12	1171-023	1/4 Receptacle	X	X	X	X	X	X	X							
13	1804-0385	High Pressure Switch (Flare)	X	X	X	X	X	X	X	X	X	X	X	X	X	X
13	1804-0386	Low Pressure Switch (Flare	X	X	X	X	X	X	X	X	X	X	X	X	X	X
NS	5201-002	Filter Drier	X	X	X	X	X	X	X	X	X	X	X	X	X	X
NS	5650-042	Rev. Valve Solenoid, Red Casing (Ranco)					X	X	X					X	X	X
NS	5650-046	Rev. Valve Solenoid, Black Casing (San Hua)					X	X	X					X	X	X
NS	5650-045	Three-Way Valve with 24V Solenoid Coil					X	X	X					X	X	X
NS	800-0272	Drain Back Capillary					X	X	X					X	X	X
NS	CMA-28	Low Ambient Control (Flare) ①	X	X	X	X				X	X	X	X			

NS – Not Shown
① – Optional on these models

This Table references Exploded View on Page 5

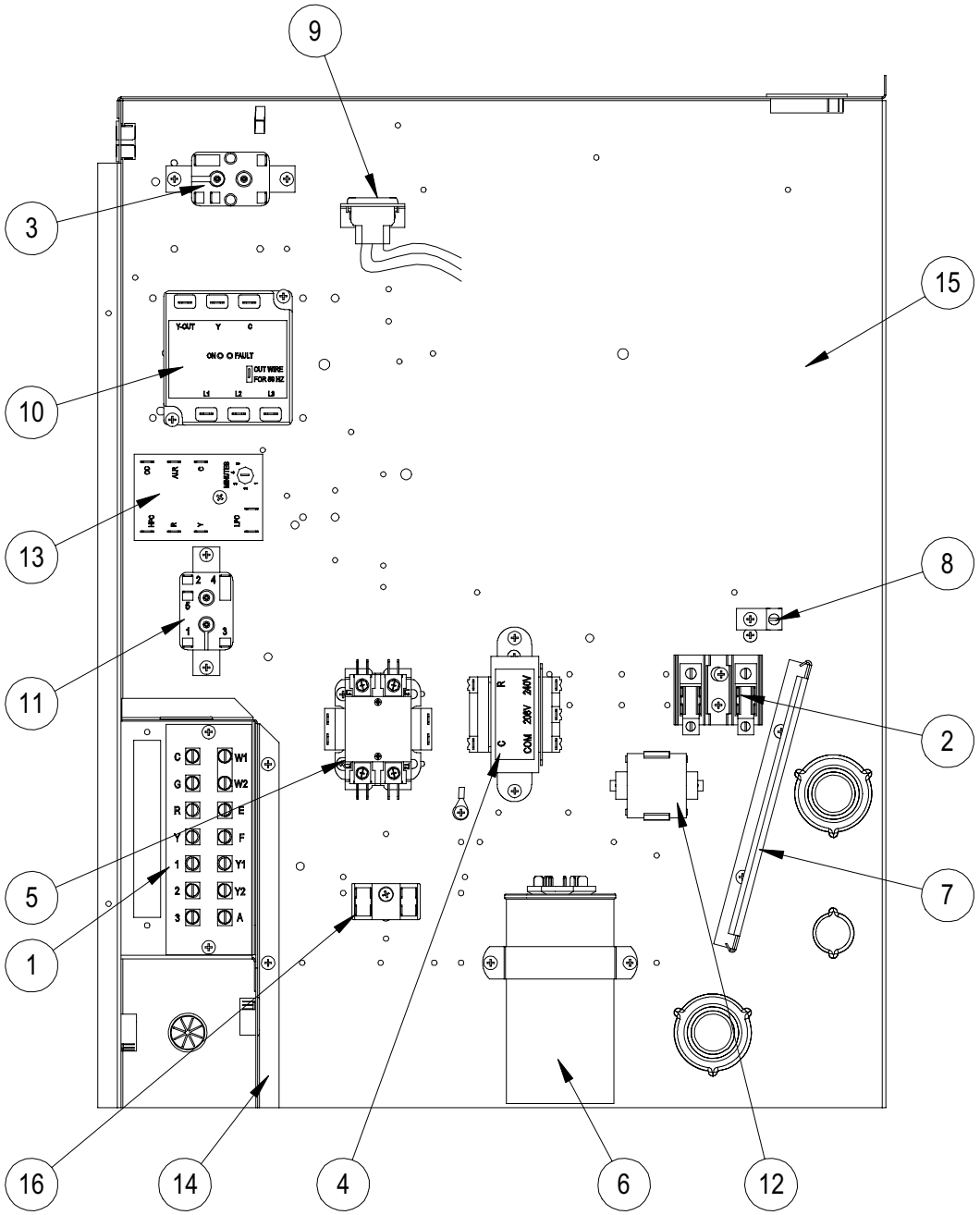

SEXP-512

This drawing is referenced in Tables on Pages 9 and 10

Drawing No.	Part No.	Description	W421A1-A	W421A1-B	W421A1-C	W421A1-E	W421A1-F	W481A1-A	W481A1-B	W481A1-C	W481A1-E	W481A1-F
1	8607-024	Low Voltage Terminal Strip	X	X	X	X	X	X	X	X	X	X
2	8607-013	Terminal Block 2 Pole	X				2	X				2
2	8607-014	Terminal Block 3 Pole		X	X	X			X	X	X	
2	8607-015	Phenolic Insulator			X					X		
3	8201-009	Blower Control Relay	X	X		X	X	X	X		X	X
3	8201-032	Blower Control Relay			X					X		
4	8407-034	Transformer	X	X		X	X	X	X		X	X
4	8407-042	Transformer			X					X		
5	8401-002	Compressor Contactor		X	X	X	X		X	X	X	X
5	8401-025	Compressor Contactor	X					X				
6	8552-005	Outdoor Motor Capacitor		X		X	X		X		X	X
6	8552-026	Outdoor Motor Capacitor			X					X		
6	8552-079	Compressor Capacitor	X									
6	8552-059	Compressor Capacitor						X				
7	135-130	Wire Shield	X	X	X	X	X	X	X	X	X	X
8	8611-006	Ground Terminal	X	X	X	X	X	X	X	X	X	X
9	3000-1017	6 Pin Connector	X	X	X	X	X	X	X	X	X	X
10	8201-085	Phase Monitor		X	X	X	X		X	X	X	X
11	8201-062	Alarm Relay ①	X	X	X	X	X	X	X	X	X	X
12	8551-004	Start Device	X					X				
13	8201-088	Compressor Control Module	X	X	X	X	X	X	X	X	X	X
14	117X139	Low Voltage Box	X	X	X	X	X	X	X	X	X	X
15	117X143	Control Panel	X	X	X	X	X	X	X	X	X	X
16	8607-017	Terminal Block ①	X	X	X	X	X	X	X	X	X	X
NS	8615-040	Circuit Breaker 50A 2 Pole ②	X					X				
NS	8615-042	Circuit Breaker 35A 3 Pole ②		X		X			X		X	
NS	8615-067	Toggle Disconnect ②			X		X			X		X
NS	4095-144	Wiring Diagram	X					X				
NS	4095-242	Wiring Diagram		X					X			
NS	4095-343	Wiring Diagram			X					X		
NS	4095-243	Wiring Diagram				X					X	
NS	4095-632	Wiring Diagram					X					X

① Optional on these models.

② Circuit breakers listed are for units without electric heat "0Z" models. Hot gas bypass models not available without electric heat. See Heater Replacement Parts Manual for units with electric heat.

NS = Not shown

This Table is references drawing on Page 8

CONTROL PANEL

Drawing No.	Part No.	Description	W60A1-A	W60A1-B	W60A1-C	W60A1-E	W60A1-F
1	8607-024	Low Voltage Terminal Strip	X	X	X	X	X
2	8607-013	Terminal Block 2 Pole	X				2
2	8607-014	Terminal Block 3 Pole		X	X	X	
2	8607-015	Phenolic Insulator			X		
3	8201-009	Blower Control Relay	X	X		X	X
3	8201-032	Blower Control Relay			X		
4	8407-034	Transformer	X	X		X	X
4	8407-042	Transformer			X		
5	8401-002	Compressor Contactor		X	X	X	X
5	8401-025	Compressor Contactor	X				
6	8552-058	Compressor Capacitor	X				
6	8552-004	Outdoor Motor Capacitor		X			
6	8552-026	Outdoor Motor Capacitor			X		
6	8552-005	Outdoor Motor Capacitor				X	X
7	135-130	Wire Shield	X	X	X	X	X
8	8611-006	Ground Terminal	X	X	X	X	X
9	3000-1017	6 Pin Connector	X	X	X	X	X
10	8201-085	Phase Monitor		X	X	X	X
11	8201-062	Alarm Relay ①	X	X	X	X	X
12	8551-004	Start Device (PTCR) ①	X				
13	8201-088	Compressor Control Module	X	X	X	X	X
14	117X139	Low Voltage Box	X	X	X	X	X
15	117X143	Control Panel	X	X	X	X	X
16	8607-017	Terminal Block ①	X	X	X	X	X
NS	8615-041	Circuit Breaker 60A 2 Pole ②	X				
NS	8615-043	Circuit Breaker 40A 3 Pole ②		X		X	
NS	8615-067	Toggle Disconnect ②			X		X
NS	4095-144	Wiring Diagram	X				
NS	4095-242	Wiring Diagram		X			
NS	4095-343	Wiring Diagram			X		
NS	4095-243	Wiring Diagram				X	
NS	4095-632	Wiring Diagram					X

② Circuit breakers listed are for units without electric heat "0Z" models. Hot gas bypass models not available without electric heat. See Heater Replacement Parts Manual for units with electric heat.

NS = Not shown

This Table is references drawing on Page 8

This page left blank intentionally.

CONTROL PANEL

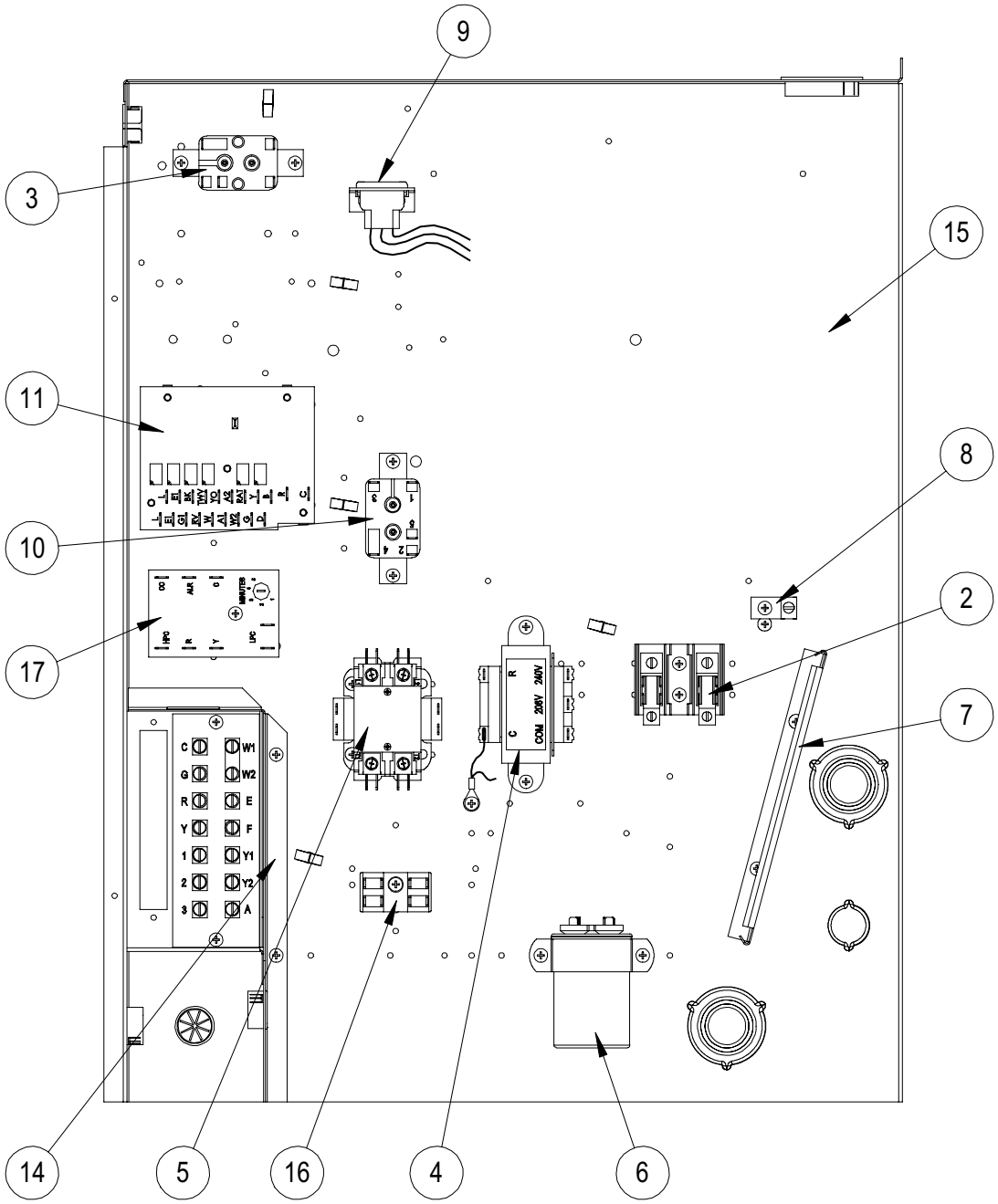

SEXP-513

Dwg. No.	Part Number	Description	W42A1DA	W42A1DB	W42A1DC	W48A1DA	W48A1DB	W48A1DC	W60A1DA	W60A1DB	W60A1DC
1	8607-024	Low Voltage Terminal Strip	X	X	X	X	X	X	X	X	X
2	8607-013	Terminal Block 2 Pole	X			X			X		
2	8607-014	Terminal Block 3 Pole		X	X		X	X		X	X
2	8607-015	Phenolic Insulator			X			X			X
3	8201-009	Blower Control Relay	X	X		X	X		X	X	
3	8201-032	Blower Control Relay			X			X			X
4	8407-035	Transformer	X	X		X	X		X	X	
4	8407-042	Transformer			X			X			X
5	8401-002	Compressor Contactor		X	X		X	X		X	X
5	8401-025	Compressor Contactor	X			X			X		
6	8552-079	Compressor Capacitor 45/10 MFD-370V	X								
6	8552-005	Outdoor Motor Capacitor 10 MFD-370V		X			X				
6	8552-026	Outdoor Motor Capacitor 15 MFD-370V			X			X			X
6	8552-059	Compressor Capacitor 60/10 MFD-370V				X					
6	8552-058	Compressor Capacitor 80/10 MFD-440V							X		
6	8552-004	Outdoor Motor Capacitor 7.5 MFD-370V								X	
7	135-130	Wire Shield	X	X	X	X	X	X	X	X	X
8	8611-006	Ground Terminal	X	X	X	X	X	X	X	X	X
9	3000-1017	6 Pin Connector	X	X	X	X	X	X	X	X	X
10	8201-062	Relay	X	X	X	X	X	X	X	X	X
11	8201-092	Logic Board	X	X	X	X	X	X	X	X	X
14	117X139	Low Voltage Box	X	X	X	X	X	X	X	X	X
15	117X143	Control Panel	X	X	X	X	X	X	X	X	X
16	8607-017	Terminal Block (Optional)	X	X	X	X	X	X	X	X	X
17	8201-088	Compressor Control Module	X	X	X	X	X	X	X	X	X
NS	8615-040	Circuit Breaker 50A 2 Pole ②	X			X					
NS	8615-042	Circuit Breaker 35A 3 Pole ②		X			X				
NS	8615-067	Toggle Disconnect ②			X			X			X
NS	8615-041	Circuit Breaker 60A 2 Pole ②							X		
NS	8615-044	Circuit Breaker 45A 3 Pole ②								X	
NS	4095-145	Wiring Diagram	X			X			X		
NS	4095-245	Wiring Diagram		X			X			X	
NS	4095-345	Wiring Diagram			X			X			X

② Circuit breakers listed are for units without electric heat "0Z" models. Hot gas bypass models not available without electric heat. See Heater Replacement Parts Manual for units with electric heat.

NS = Not shown

BLOWER ASSEMBLY

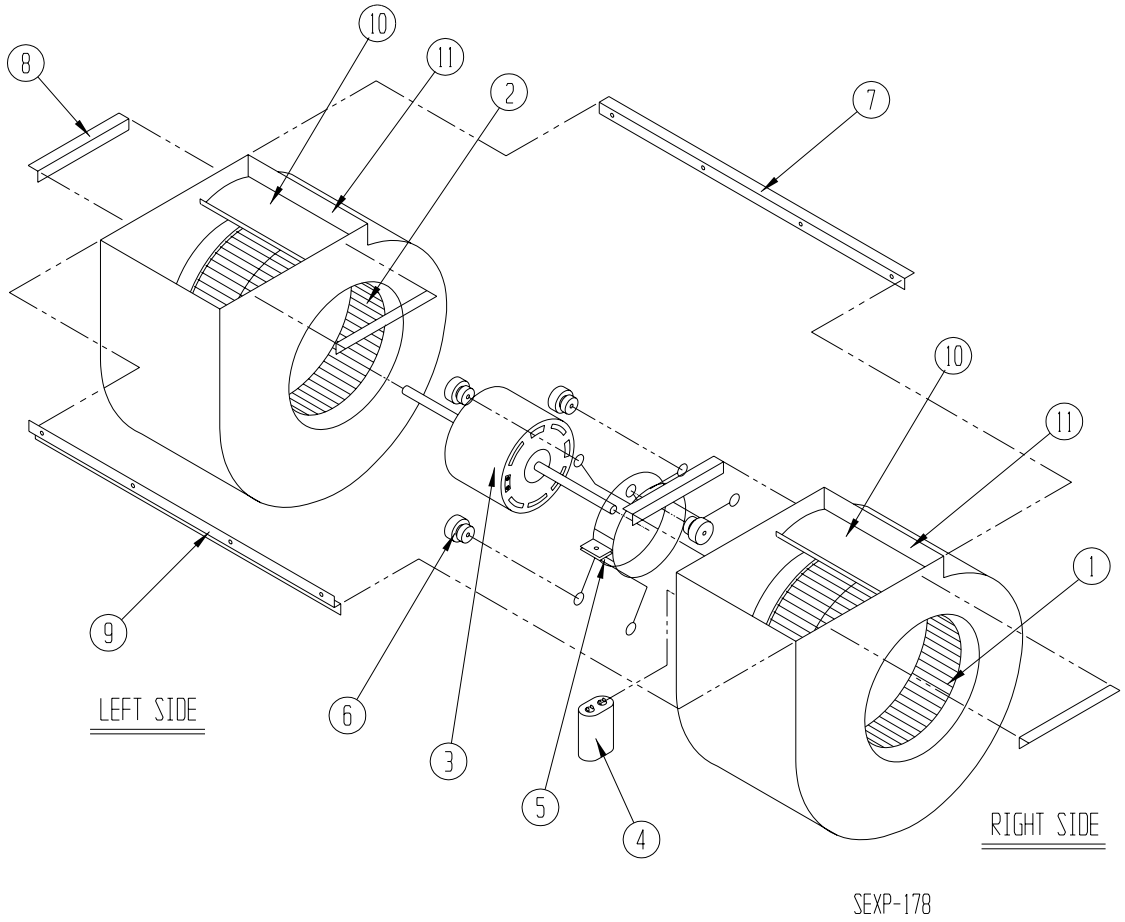

Drawing No.	Part No.	Description	900-183	900-184	900-185	900-186
1	5152-011	10 Inch Wheel (CW)			X	X
1	5152-057	9 Inch Wheel (CW)	X	X		
2	5152-012	10 Inch Wheel (CCW)			X	X
2	5152-058	9 Inch Wheel (CCW)	X	X		
3	8106-0[illegible]	Blower Motor (230/208)	X		X	
3	8106-025	Blower Motor (460)		X		X
4	8552-005	Capacitor	X	X	X	X
5	8200-040	Motor Mount	X	X	X	X
6	5451-011	Grommets	6	6	6	6
7	105-881	Back Brace	X	X	X	X
8	105-880	Side Angle	4	4	4	4
9	103-389	Front Brace	X	X	X	X
10	151-101	Housing	2	2	2	2
11	144-166	Diffuser	2	2	2	2