WALL MOUNTED PACKAGE AIR CONDITIONER

REPLACEMENT PARTS MANUAL

Models

WA/L3S2-A WA/L3S2-B WA/L3S2-C
WA/L4S2-A WA/L4S2-B WA/L4S2-C
WA/L5S2-A WA/L5S2-B WA/L5S2-C

General Notes

- Revised and/or additional pages may be issued from time to time.
- A complete and current manual consists of pages shown in the following contents section.

Important

- Contact the installing and/or local Bard distributor for all parts requirements. Make sure you have the complete model and serial number available from the unit rating plates.

Contents

Description Page

Cabinet Components - Right Hand
- Exploded View 2
- Usage List (WA3S2) 3
- Usage List (WA4 & 5S2) 4

Cabinet Components - Left Hand
- Exploded View 5
- Usage List (WL3S2)..... 6
- Usage List (WL4 & 5S2) 7

Functional Components - RH (shown) / LH (mirrored)
- Exploded View 8
- Usage List (Right Hand)..... 9
- Usage List (Left Hand) 10

Control Panel - RH (shown) / LH (mirrored)
- Exploded View 11
- Usage List (Right Hand)..... 12
- Usage List (Left Hand) 13

Blower Assembly - Right & Left Hand
- Exploded View 14
- Usage List 14

Bard Manufacturing Company, Inc.
Bryan, Ohio 43506

Since 1914...Moving ahead, just as planned.

Manual: 2110-493B
Supersedes: 2110-493A
File: Tab 16
Date: 02-24-11

CABINET COMPONENTS

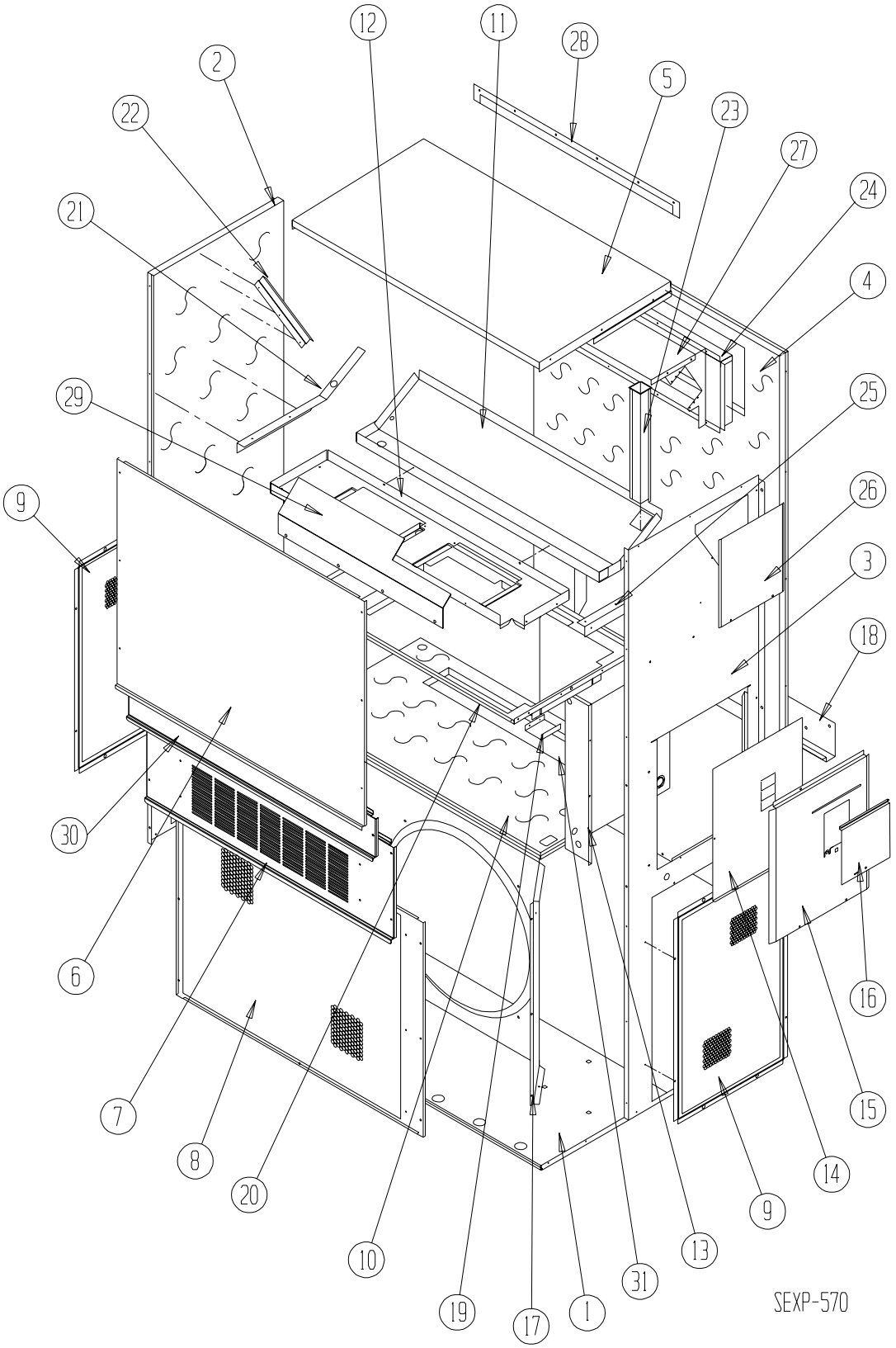

CABINET COMPONENTS

Drawing No.	Part No.	Description	WA3S2-A	WA3S2-B	WA3S2-C
1	S127-342-4	Lower Base	X	X	X
1	S127X405 ③	Lower Base	X	X	X
2	S500-262-* ①	Left Side	X	X	X
2	S500-464 ②	Left Side	X	X	X
2	S500-518 ③	Left Side	X	X	X
3	S500-261-* ①	Right Side	X	X	X
3	S500-463 ②	Right Side	X	X	X
3	S500-517 ③	Right Side	X	X	X
4	S508-098	Back	X	X	X
4	S508-191 ②	Back	X	X	X
4	S508-221 ③	Back	X	X	X
5	S506-142-* ①	Top	X	X	X
5	S506-251 ②	Top	X	X	X
5	S506-274 ③	Top	X	X	X
6	S515-144-* ①	Upper Front	X	X	X
6	S515-142 ②	Upper Front	X	X	X
6	S515-162 ③	Upper Front	X	X	X
7	S553-383-* ①	Vent Option Door	X	X	X
7	S553-408-* ①	Vent Option Door with ERV	X	X	X
7	S552-456 ②	Vent Option Door	X	X	X
7	S553-449 ③	Vent Option Door	X	X	X
8	118-048-* ①	Condenser Grille	X	X	X
8	118-064 ②	Condenser Grille	X	X	X
8	118-072 ③	Condenser Grille	X	X	X
9	118-057-* ①	Side Grille	2	2	2
9	118-063 ②	Side Grille	2	2	2
9	118-073 ③	Side Grille	2	2	2
10	S521X258	Condenser Partition	X	X	X
11	S523-125	Drain Pan Assembly	X	X	X
12	121X216	Blower Partition	X	X	X
13	Control Panel Assy.	See Control Panel Assembly Drawing and Parts List	X	X	X
14	S132-114	Control Panel Cover (Inner)	X	X	
14	S132-183	Control Panel Cover (Inner)			X
15	S533-113-* ①	Control Panel Cover (Outer)	X	X	X
15	S533-185 ②	Control Panel Cover (Outer)	X	X	X
15	S533-195 ③	Control Panel Cover (Outer)	X	X	X
16	S153-218-* ①	Disconnect Access Door	X	X	X
16	S153-387 ②	Disconnect Access Door	X	X	X
16	S153-405 ③	Disconnect Access Door	X	X	X
17	125-051	Fan Shroud	X	X	X
17	125-061 ③	Fan Shroud	X	X	X
18	113-140	Bottom Mounting Bracket	X	X	X
19	137-209	Fill	X	X	X
20	131X099	Filter Tray	X	X	X
21	105X877	Left Side Support	X	X	X
22	147-046	Left Evaporator Support	X	X	X
23	135-128	Raceway	X	X	X
24	S111X034	Outlet Air Frame Assembly	X	X	X
25	105X878	Right Side Support	X	X	X
26	S143-042-* ①	Right Side Cover Plate (Outer)	X	X	X
26	S143-105 ②	Right Side Cover Plate (Outer)	X	X	X
26	S143-125 ③	Right Side Cover Plate (Outer)	X	X	X
27	135-129	Heat Shield	X	X	X
28	113-150-* ①	Top Rain Flashing	X	X	X
28	113-359 ③	Top Rain Flashing	X	X	X
29	135-175	Air Deflector	X	X	X
30	S553-384-* ①	Filter Door Assembly	X	X	X
30	S552-457 ②	Filter Door Assembly	X	X	X
30	S553-450 ③	Filter Door Assembly	X	X	X
31	S536-258	Condenser Partition Blank-Off Plate	X	X	X

① *Exterior cabinet parts are manufactured with various paint color options. To insure that you receive the proper paint color, you must include the complete model and serial number of the unit for which cabinet parts are being ordered.*

② *Note: Exterior cabinet parts are manufactured from aluminum Code "A"*

③ *Note: Exterior cabinet parts are manufactured from stainless steel Code "S"*

NS = Not Shown

CABINET COMPONENTS

Drawing No.	Part No.	Description	WA4S2-A	WA4S2-B	WA4S2-C	WA5S2-A	WA5S2-B	WA5S2-C
1	S127-342-4	Lower Base	X	X	X	X	X	X
1	S127X405 ③	Lower Base	X	X	X	X	X	X
2	S500-316-* ①	Left Side	X	X	X	X	X	X
2	S500-545 ②	Left Side	X	X	X	X	X	X
2	S500-543 ③	Left Side	X	X	X	X	X	X
3	S500-315-* ①	Right Side	X	X	X	X	X	X
3	S500-546 ②	Right Side	X	X	X	X	X	X
3	S500-544 ③	Right Side	X	X	X	X	X	X
4	S508-129	Back	X	X	X	X	X	X
4	S508-229 ②	Back	X	X	X	X	X	X
4	S508-228 ③	Back	X	X	X	X	X	X
5	S506-142-* ①	Top	X	X	X	X	X	X
5	S506-251 ②	Top	X	X	X	X	X	X
5	S506-274 ③	Top	X	X	X	X	X	X
6	S515-144-* ①	Upper Front	X	X	X	X	X	X
6	S515-142 ②	Upper Front	X	X	X	X	X	X
6	S515-162 ③	Upper Front	X	X	X	X	X	X
7	S553-383-* ①	Vent Option Door	X	X	X	X	X	X
7	S553-408-* ①	Vent Option Door with ERV	X	X	X	X	X	X
7	S552-456 ②	Vent Option Door	X	X	X	X	X	X
7	S553-449 ③	Vent Option Door	X	X	X	X	X	X
8	118-052-* ①	Condenser Grille	X	X	X	X	X	X
8	118-080 ②	Condenser Grille	X	X	X	X	X	X
8	118-078 ③	Condenser Grille	X	X	X	X	X	X
9	118-058-* ①	Side Grille	2	2	2	2	2	2
9	118-081 ②	Side Grille	2	2	2	2	2	2
9	118-079 ③	Side Grille	2	2	2	2	2	2
10	S521X258	Condenser Partition	X	X	X	X	X	X
11	S523-125	Drain Pan Assembly	X	X	X	X	X	X
12	121X216	Blower Partition	X	X	X	X	X	X
13	Control Panel Assy.	See Control Panel Assembly Drawing and Parts List	X	X	X	X	X	X
14	S132-114	Control Panel Cover (Inner)	X	X		X	X	
14	S132-183	Control Panel Cover (Inner)			X			X
15	S533-113-* ①	Control Panel Cover (Outer)	X	X	X	X	X	X
15	S533-185 ②	Control Panel Cover (Outer)	X	X	X	X	X	X
15	S533-195 ③	Control Panel Cover (Outer)	X	X	X	X	X	X
16	S153-218-* ①	Disconnect Access Door	X	X	X	X	X	X
16	S153-387 ②	Disconnect Access Door	X	X	X	X	X	X
16	S153-405 ③	Disconnect Access Door	X	X	X	X	X	X
17	125-050	Fan Shroud	X	X	X	X	X	X
17	125-062 ③	Fan Shroud	X	X	X	X	X	X
18	113-140	Bottom Mounting Bracket	X	X	X	X	X	X
19	137-209	Fill	X	X	X	X	X	X
20	131X099	Filter Tray	X	X	X	X	X	X
21	105X877	Left Side Support	X	X	X	X	X	X
22	147-046	Left Evaporator Support	X	X	X	X	X	X
24	S111X034	Outlet Air Frame Assembly	X	X	X	X	X	X
25	105X878	Right Side Support	X	X	X	X	X	X
26	S143-042-* ①	Right Side Cover Plate (Outer)	X	X	X	X	X	X
26	S143-105 ②	Right Side Cover Plate (Outer)	X	X	X	X	X	X
26	S143-125 ③	Right Side Cover Plate (Outer)	X	X	X	X	X	X
27	135-129	Heat Shield	X	X	X	X	X	X
28	113-150-* ①	Top Rain Flashing	X	X	X	X	X	X
28	113-359 ③	Top Rain Flashing	X	X	X	X	X	X
30	S553-384-* ①	Filter Door Assembly	X	X	X	X	X	X
30	S552-457 ②	Filter Door Assembly	X	X	X	X	X	X
30	S553-450 ③	Filter Door Assembly	X	X	X	X	X	X
31	S536-258	Condenser Partition Blank-Off Plate	X	X	X	X	X	X

① *Exterior cabinet parts are manufactured with various paint color options. To insure that you receive the proper paint color, you must include the complete model and serial number of the unit for which cabinet parts are being ordered.*

② *Note: Exterior cabinet parts are manufactured from aluminum Code "A"*

③ *Note: Exterior cabinet parts are manufactured from stainless steel Code "S"*

NS = Not Shown

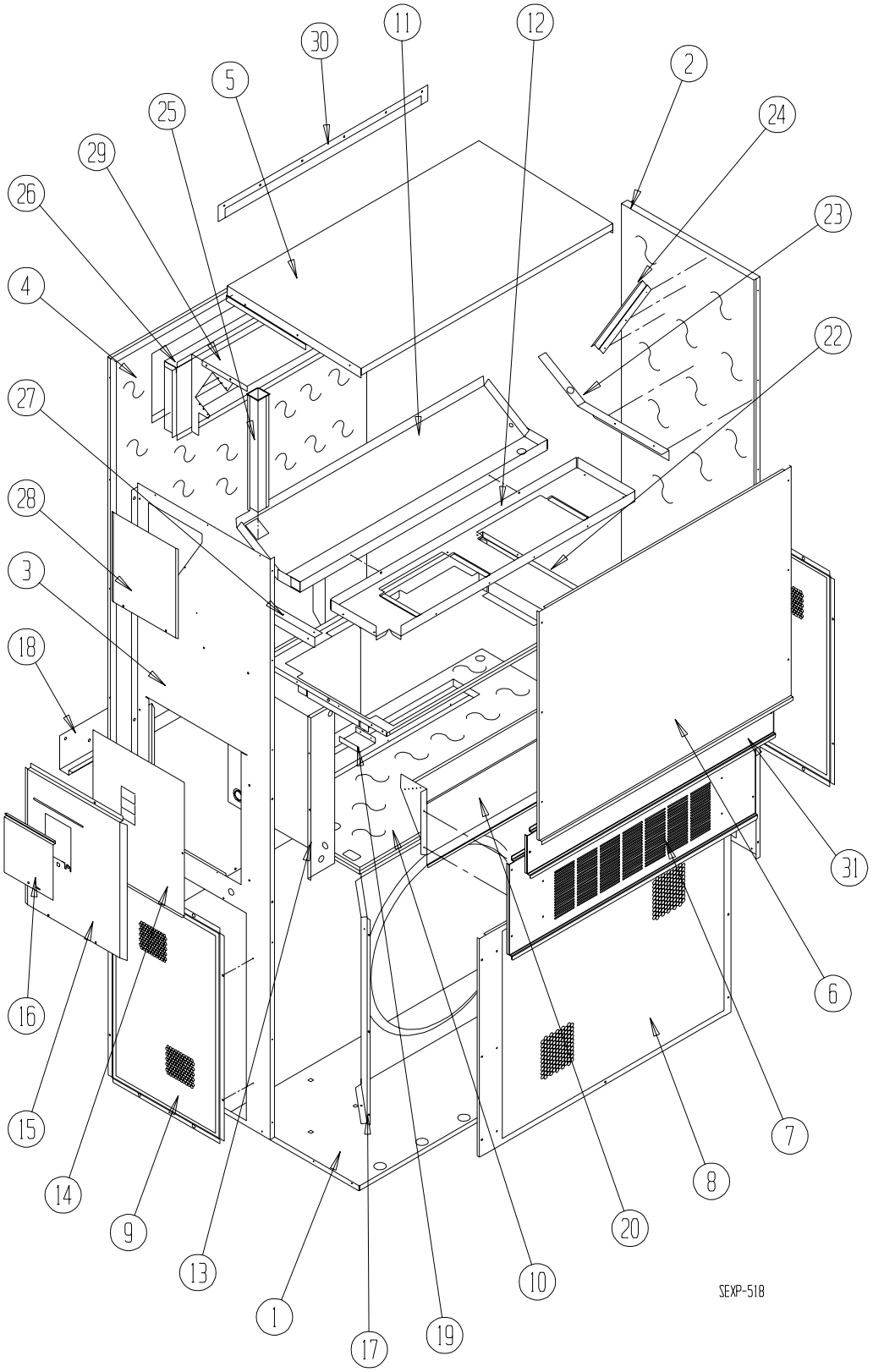
30
11
12
5
2
25
24
29
26
23
4
22
27
28
3
18
31
6
16
7
15
8
14
20
9
13
10
1
17
19
SEXP-518

CABINET COMPONENTS

Drawing No.	Part No.	Description	WL3S2-A	WL3S2-B	WL3S2-C
1	S127-403-4	Lower Base	X	X	X
1	S127Y405 ③	Lower Base	X	X	X
2	S500-319-* ①	Right Side	X	X	X
2	S500-465 ②	Right Side	X	X	X
2	S500-516 ③	Right Side	X	X	X
3	S500-320 ①	Left Side	X	X	X
3	S500-466 ②	Left Side	X	X	X
3	S500-519 ③	Left Side	X	X	X
4	S508-098	Back	X	X	X
4	S508-191 ②	Back	X	X	X
4	S508-221 ③	Back	X	X	X
5	S506-142-* ①	Top	X	X	X
5	S506-251 ②	Top	X	X	X
5	S506-274 ③	Top	X	X	X
6	S515-144-* ①	Upper Front	X	X	X
6	S514-142 ②	Upper Front	X	X	X
6	S514-162 ③	Upper Front	X	X	X
7	S553-383-* ①	Vent Option Door	X	X	X
7	S552-456 ②	Vent Option Door	X	X	X
7	S553-449 ③	Vent Option Door	X	X	X
8	118-049 ①	Condenser Grille	X	X	X
8	118-065 ②	Condenser Grille	X	X	X
8	118-074 ③	Condenser Grille	X	X	X
9	118-057-* ①	Side Grille	2	2	2
9	118-063 ②	Side Grille	2	2	2
9	118-073 ③	Side Grille	2	2	2
10	S521Y258	Condenser Partition	X	X	X
11	S523-137	Drain Pan	X	X	X
12	121Y216	Blower Partition	X	X	X
13	Control Panel Assembly	See Control Panel Assembly Drawing & Parts List	X	X	X
14	S132-114	Control Panel Cover (Inner)	X	X	
14	S132-183	Control Panel Cover (Inner)			X
15	S533-140-* ①	Control Panel Cover (Outer)	X	X	X
15	S533-186 ②	Control Panel Cover (Outer)	X	X	X
15	S533-203 ③	Control Panel Cover (Outer)	X	X	X
16	S153-218-* ①	Disconnect Access Door	X	X	X
16	S153-387 ②	Disconnect Access Door	X	X	X
16	S153-405 ③	Disconnect Access Door	X	X	X
17	125-051	Fan Shroud	X	X	X
17	125-061 ③	Fan Shroud	X	X	X
18	113-140	Bottom Mounting Bracket	X	X	X
19	137-209	Fill	X	X	X
20	BFAD-5	Fresh Air Damper Assembly	X	X	X
22	131Y099	Filter Tray	X	X	X
23	105Y878	Left Side Support	X	X	X
24	147-046	Left Evaporator Support	X	X	X
25	135-128	Raceway	2	2	2
26	S111Y034	Outlet Air Frame Assembly	X	X	X
27	105Y877	Right Side Support	X	X	X
28	S143-042-* ①	Right Side Cover Plate (Outer)	X	X	X
28	S143-105 ②	Right Side Cover Plate (Outer)	X	X	X
28	S143-125 ③	Right Side Cover Plate (Outer)	X	X	X
29	135-129	Heat Shield	X	X	X
30	113-150-* ①	Top Rain Flashing	X	X	X
30	113-359 ③	Top Rain Flashing	X	X	X
31	S553-384-* ①	Filter Door Assembly	X	X	X
31	S552-457 ②	Filter Door Assembly	X	X	X
31	S553-450 ③	Filter Door Assembly	X	X	X
NS	S536-498	Condenser Partition Block Off Plate	X	X	X

① *Exterior cabinet parts are manufactured with various paint color options. To insure that you receive the proper paint color, you must include the complete model and serial number of the unit for which cabinet parts are being ordered.*

② *Note: Exterior cabinet parts are manufactured from aluminum Code "A"*

③ *Note: Exterior cabinet parts are manufactured from stainless steel Code "S"*

NS = Not Shown

Drawing No.	Part No.	Description	WL4S2-A	WL4S2-B	WL4S2-C	WL5S2-A	WL5S2-B	WL5S2-C
1	S127-403-4	Lower Base	X	X	X	X	X	X
2	S500-367-* ①	Right Side	X	X	X	X	X	X
2	S500-547 ②	Right Side	X	X	X	X	X	X
3	S500-368 ①	Left Side	X	X	X	X	X	X
3	S500-548 ②	Left Side	X	X	X	X	X	X
4	S508-129 ①	Back	X	X	X	X	X	X
4	S508-229 ②	Back	X	X	X	X	X	X
5	S506-142-* ①	Top	X	X	X	X	X	X
5	S506-251 ②	Top	X	X	X	X	X	X
6	S515-144-* ①	Upper Front	X	X	X	X	X	X
6	S514-142 ②	Upper Front	X	X	X	X	X	X
7	S553-383-* ①	Vent Option Door	X	X	X	X	X	X
7	S552-456 ②	Vent Option Door	X	X	X	X	X	X
8	118-053 ①	Condenser Grille	X	X	X	X	X	X
8	118-082 ②	Condenser Grille	X	X	X	X	X	X
9	118-058 ①	Side Grille	2	2	2	2	2	2
9	118-081 ②	Side Grille	2	2	2	2	2	2
10	S521Y258	Condenser Partition	X	X	X	X	X	X
11	S523-137	Drain Pan	X	X	X	X	X	X
12	121Y216	Blower Partition	X	X	X	X	X	X
13	Control Panel Assembly	See Control Panel Assembly Drawing & Parts List	X	X	X	X	X	X
14	S132-114	Control Panel Cover (Inner)	X	X		X	X	
14	S132-183	Control Panel Cover (Inner)			X			X
15	S533-140-* ①	Control Panel Cover (Outer)	X	X	X	X	X	X
15	S533-186 ②	Control Panel Cover (Outer)	X	X	X	X	X	X
16	S153-218-* ①	Disconnect Access Door	X	X	X	X	X	X
16	S153-387 ②	Disconnect Access Door	X	X	X	X	X	X
17	125X050	Fan Shroud	X	X	X	X	X	X
18	113-140	Bottom Mounting Bracket	X	X	X	X	X	X
19	137-209	Fill	X	X	X	X	X	X
20	BFAD-5	Fresh Air Damper Assembly	X	X	X	X	X	X
22	131Y099	Filter Tray	X	X	X	X	X	X
23	105Y878	Left Side Support	X	X	X	X	X	X
24	147-046	Left Evaporator Support	X	X	X	X	X	X
25	135-128	Raceway	2	2	2	2	2	2
26	S111Y034	Outlet Air Frame Assembly	X	X	X	X	X	X
27	105Y877	Right Side Support	X	X	X	X	X	X
28	S143-042-* ①	Right Side Cover Plate (Outer)	X	X	X	X	X	X
28	S143-105 ②	Right Side Cover Plate (Outer)	X	X	X	X	X	X
29	135-129	Heat Shield	X	X	X	X	X	X
30	113-150-* ①	Top Rain Flashing	X	X	X	X	X	X
31	S553-384-* ①	Filter Door Assembly	X	X	X	X	X	X
31	S552-457 ②	Filter Door Assembly	X	X	X	X	X	X
NS	S536-498	Condenser Partition Block Off Plate	X	X	X	X	X	X

① *Exterior cabinet parts are manufactured with various paint color options. To insure that you receive the proper paint color, you must include the complete model and serial number of the unit for which cabinet parts are being ordered.*

② *Note: Exterior cabinet parts are manufactured from aluminum Code "A"*

NS = Not Shown

FUNCTIONAL COMPONENTS — RH (Shown) / LH (Mirrored)

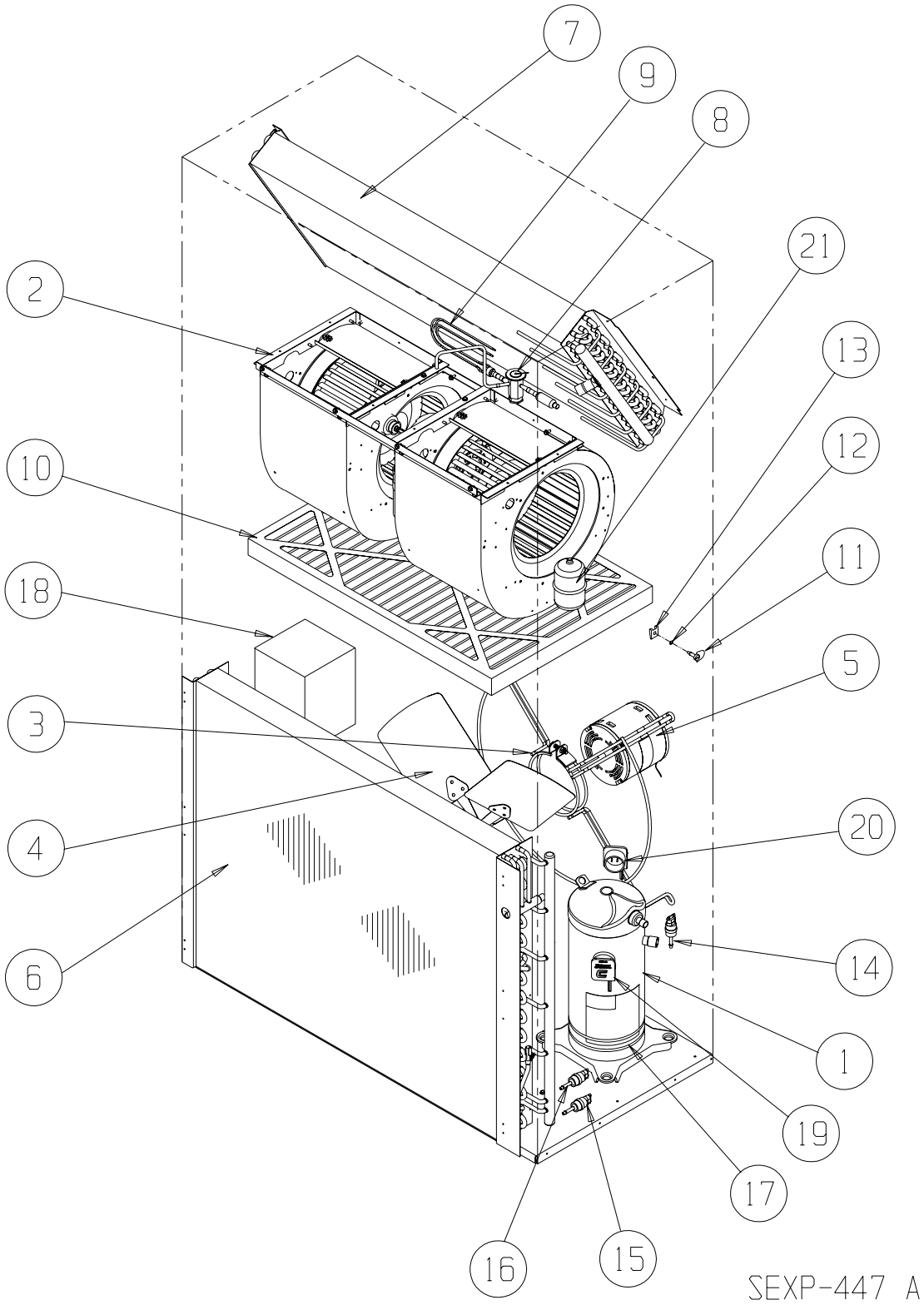

Drawing No.	Part No.	Description	WA3S2-A	WA3S2-B	WA3S2-C	WA4S2-A	WA4S2-B	WA4S2-C	WA5S2-A	WA5S2-B	WA5S2-C
1	8000-269	Compressor	X								
1	8000-272	Compressor		X							
1	8000-275	Compressor			X						
1	8000-267	Compressor				X					
1	8000-270	Compressor					X				
1	8000-273	Compressor						X			
1	8000-268	Compressor							X		
1	8000-271	Compressor								X	
1	8000-274	Compressor									X
2	S900-272-001	Blower Assembly	X	X	X						
2	S900-273-002	Blower Assembly				X	X	X			
2	S900-273-003	Blower Assembly							X	X	X
3	8200-004	Fan Motor Mount	X	X	X	X	X	X	X	X	X
4	5151-027	Fan Blade	X	X	X	X	X	X	X	X	X
5	8105-039	Condenser Motor	X	X		X	X		X	X	
5	8105-030	Condenser Motor			X			X			X
6	5051-131BX	Condenser Coil	X	X	X						
6	5051-129BX	Condenser Coil				X	X	X	X	X	X
7	5060-124BX	Evaporator	X	X	X						
7	5060-122BX	Evaporator				X	X	X	X	X	X
8	905-0350	TXV Assembly	X	X	X						
8	905-0351	TXV Assembly				X	X	X			
8	905-0352	TXV Assembly							X	X	X
9	800-0340	Cooling Distributor	X	X	X						
9	800-0342	Cooling Distributor				X	X	X	X	X	X
10	7004-016	20" x 30" x 1" Disposable	X	X	X	X	X	X	X	X	X
10	7003-030	20" x 30" x 1" Washable	X	X	X	X	X	X	X	X	X
10	7004-027	20" x 30" x 2" Pleated Filter	X	X	X	X	X	X	X	X	X
11	1171-022	1/4 Turn Fastener	X	X	X	X	X	X	X	X	X
12	1171-024	1/4 Turn Retainer	X	X	X	X	X	X	X	X	X
13	1171-023	1/4 Turn Receptacle	X	X	X	X	X	X	X	X	X
14	1804-0386	Low Pressure Switch (Flare)	X	X	X	X	X	X	X	X	X
15	8406-112	Low Ambient Control (Flare)①	X	X	X	X	X	X	X	X	X
16	1804-0316	High Pressure Switch (Flare)	X	X	X	X	X	X	X	X	X
17	8605-017	Crankcase Heater	X	X		X	X		X	X	
17	8605-018	Crankcase Heater			X			X			X
18	8407-003	Step-Down Transformer 1.5 KVA			X						
18	8407-004	Step-Down Transformer 2.0 KVA						X			X
19	3000-1222	Compressor Power Lead				X			X		
19	3000-1224	Compressor Power Lead	X								
19	3000-1230	Compressor Power Lead					X	X		X	X
19	3000-1231	Compressor Power Lead		X	X						
20	3000-1223	Compressor Staging Solenoid Lead	X	X	X	X	X	X	X	X	X
21	5201-001	Liquid Line Filter Drier	X	X	X						
21	5201-002	Liquid Line Filter Drier				X	X	X	X	X	X

① = Optional

FUNCTIONAL COMPONENTS — Left Hand

Drawing No.	Part No.	Description	WL3S2-A	WL3S2-B	WL3S2-C	WL4S2-A	WL4S2-B	WL4S2-C	WL5S2-A	WL5S2-B	WL5S2-C
1	8000-379	Compressor	X								
1	8000-380	Compressor		X							
1	8000-381	Compressor			X						
1	8000-382	Compressor				X					
1	8000-383	Compressor					X				
1	8000-384	Compressor						X			
1	8000-385	Compressor							X		
1	8000-386	Compressor								X	
1	8000-387	Compressor									X
2	S900-272-001	Blower Assembly	X	X	X						
2	S900-273-002	Blower Assembly				X	X	X			
2	S900-273-003	Blower Assembly							X	X	X
3	8200-004	Fan Motor Mount	X	X	X	X	X	X	X	X	X
4	5151-027	Fan Blade	X	X	X	X	X	X	X	X	X
5	8105-039	Condenser Motor	X	X		X	X		X	X	
5	8105-030	Condenser Motor			X			X			X
6	5051-165BX	Condenser Coil	X	X	X						
6	5051-166BX	Condenser Coil				X	X	X	X	X	X
7	5060-124BX	Evaporator	X	X	X						
7	5060-122BX	Evaporator				X	X	X	X	X	X
8	905-0538	TXV Assembly	X	X	X						
8	905-0539	TXV Assembly				X	X	X			
8	905-0540	TXV Assembly							X	X	X
9	800-0340	Cooling Distributor	X	X	X						
9	800-0342	Cooling Distributor				X	X	X	X	X	X
10	7004-016	20" x 30" x 1" Disposable	X	X	X	X	X	X	X	X	X
10	7003-030	20" x 30" x 1" Washable	X	X	X	X	X	X	X	X	X
10	7004-027	20" x 30" x 2" Pleated Filter	X	X	X	X	X	X	X	X	X
11	1171-022	1/4 Turn Fastener	X	X	X	X	X	X	X	X	X
12	1171-024	1/4 Turn Retainer	X	X	X	X	X	X	X	X	X
13	1171-023	1/4 Turn Receptacle	X	X	X	X	X	X	X	X	X
14	1804-0386	Low Pressure Switch (Flare)	X	X	X	X	X	X	X	X	X
15	8406-112	Low Ambient Control (Flare)①	X	X	X	X	X	X	X	X	X
16	1804-0316	High Pressure Switch (Flare)	X	X	X	X	X	X	X	X	X
17	8605-017	Crankcase Heater	X	X		X	X		X	X	
17	8605-018	Crankcase Heater			X			X			X
18	8407-003	Step-Down Transformer 1.5 KVA			X						
18	8407-004	Step-Down Transformer 2.0 KVA						X			X
19	3000-1222	Compressor Power Lead				X			X		
19	3000-1224	Compressor Power Lead	X								
19	3000-1230	Compressor Power Lead					X	X		X	X
19	3000-1231	Compressor Power Lead		X	X						
20	3000-1223	Compressor Staging Solenoid Lead	X	X	X	X	X	X	X	X	X
21	5201-001	Liquid Line Filter Drier	X	X	X						
21	5201-002	Liquid Line Filter Drier				X	X	X	X	X	X

① = Optional

CONTROL PANEL — RH (Shown) / LH (Mirrored)

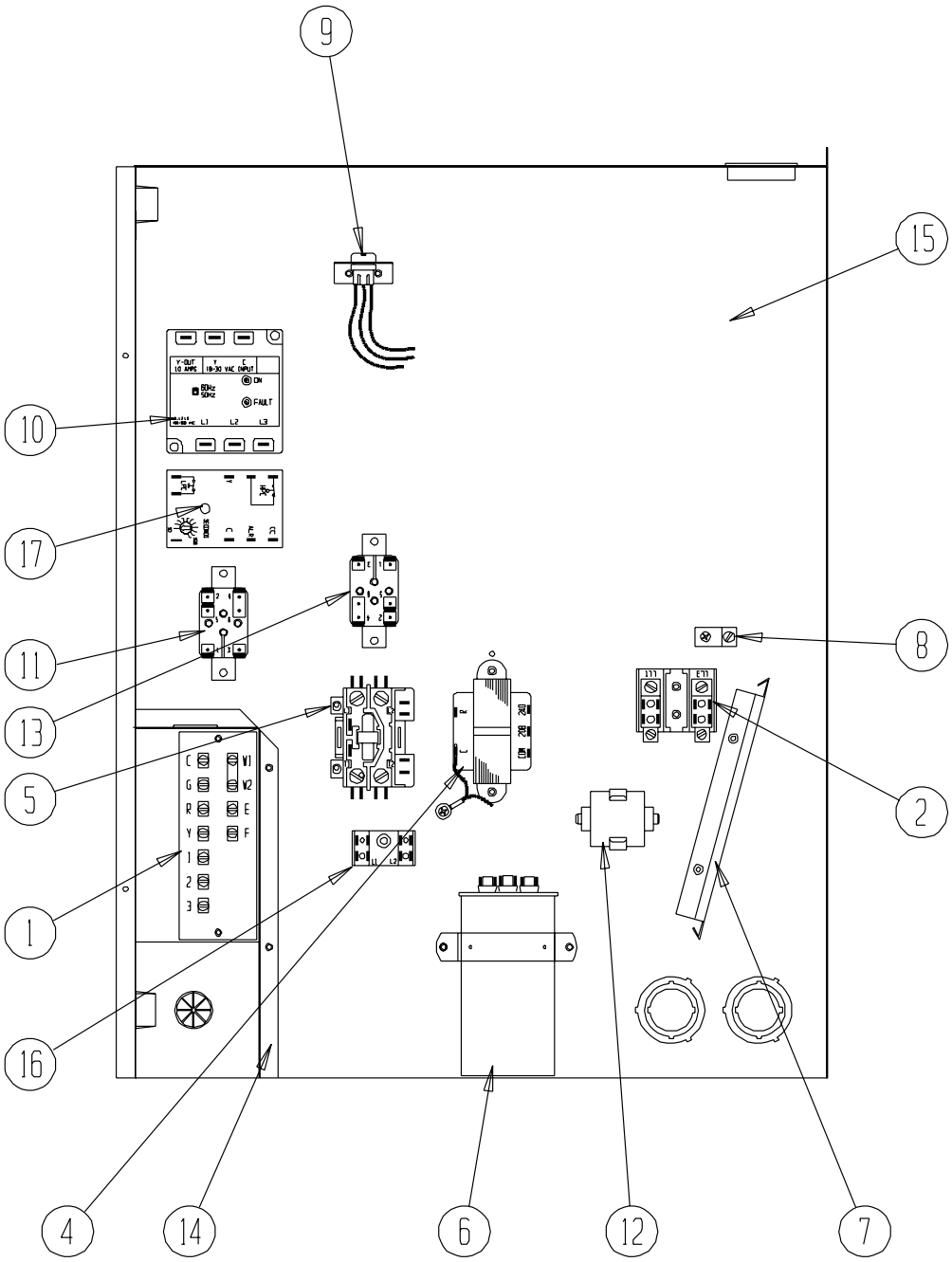

CONTROL PANEL — Right Hand

Drawing No.	Part No.	Description	WA3S2-A	WA3S2-B	WA3S2-C	WA4S2-A	WA4S2-B	WA4S2-C	WA5S2-A	WA5S2-B	WA5S2-C
1	8607-024	Low Voltage Terminal Strip	X	X	X	X	X	X	X	X	X
2	8607-013	Terminal Block 2-Pole	X			X			X		
2	8607-014	Terminal Block 3-Pole		X	X		X	X		X	X
2	8607-015	Phenolic Insulator			X			X			X
4	8407-035	Transformer (50VA)	X	X		X	X		X	X	
4	8407-042	Transformer (50VA)			X			X			X
5	8401-025	Compressor Contactor	X			X			X		
5	8401-002	Compressor Contactor		X	X		X	X		X	X
6	8552-080	Compressor/Fan Capacitor	X								
6	8552-079	Compressor/Fan Capacitor				X					
6	8552-058	Compressor/Fan Capacitor							X		
6	8552-005	Outdoor Fan Capacitor		X			X			X	
6	8552-026	Outdoor Fan Capacitor			X			X			X
7	135-130	Wire Shield	X	X	X	X	X	X	X	X	X
8	8611-006	Ground Terminal	X	X	X	X	X	X	X	X	X
9	3000-1318	6-Pin Connector	X	X	X	X	X	X	X	X	X
10	8201-085	Phase Monitor (3-PH Only)		X	X		X	X		X	X
11	8201-062	Alarm Relay ①	X	X	X	X	X	X	X	X	X
12	8551-004	Motor Starting Device (1-PH Only)	X			X			X		
13	8201-009	Crankcase Heat Relay	X	X	X	X	X	X	X	X	X
14	117X139	Low Voltage Box	X	X	X	X	X	X	X	X	X
15	117X143	Control Panel	X	X	X	X	X	X	X	X	X
16	8607-017	Terminal Block ①	X	X	X	X	X	X	X	X	X
17	8201-088	Compressor Control Module	X	X	X	X	X	X	X	X	X
NS	4095-153	Wiring Diagram	X			X			X		
NS	4095-253	Wiring Diagram		X			X			X	
NS	4095-353	Wiring Diagram			X			X			X

NS = Not Shown
① = Optional

Drawing No.	Part No.	Description	WL3S2-A	WL3S2-B	WL3S2-C	WL4S2-A	WL4S2-B	WL4S2-C	WL5S2-A	WL5S2-B	WL5S2-C
1	8607-024	Low Voltage Terminal Strip	X	X	X	X	X	X	X	X	X
2	8607-013	Terminal Block 2-Pole	X			X			X		
2	8607-014	Terminal Block 3-Pole		X	X		X	X		X	X
2	8607-015	Phenolic Insulator			X			X			X
4	8407-035	Transformer (50VA)	X	X		X	X		X	X	
4	8407-042	Transformer (50VA)			X			X			X
5	8401-025	Compressor Contactor	X			X			X		
5	8401-002	Compressor Contactor		X	X		X	X		X	X
6	8552-080	Compressor/Fan Capacitor	X								
6	8552-079	Compressor/Fan Capacitor				X					
6	8552-058	Compressor/Fan Capacitor							X		
6	8552-005	Outdoor Fan Capacitor		X			X			X	
6	8552-026	Outdoor Fan Capacitor			X			X			X
7	135-130	Wire Shield	X	X	X	X	X	X	X	X	X
8	8611-006	Ground Terminal	X	X	X	X	X	X	X	X	X
9	3000-1318	6-Pin Connector	X	X	X	X	X	X	X	X	X
10	8201-085	Phase Monitor (3-PH Only)		X	X		X	X		X	X
11	8201-062	Alarm Relay ①	X	X	X	X	X	X	X	X	X
12	8551-004	Motor Starting Device (1-PH Only)	X			X			X		
13	8201-009	Crankcase Heat Relay	X	X	X	X	X	X	X	X	X
14	117Y139	Low Voltage Box	X	X	X	X	X	X	X	X	X
15	117Y143	Control Panel	X	X	X	X	X	X	X	X	X
16	8607-017	Terminal Block ①	X	X	X	X	X	X	X	X	X
17	8201-088	Compressor Control Module	X	X	X	X	X	X	X	X	X
NS	4095-153	Wiring Diagram	X			X			X		
NS	4095-253	Wiring Diagram		X			X			X	
NS	4095-353	Wiring Diagram			X			X			X

NS = Not Shown
① = Optional

BLOWER ASSEMBLY
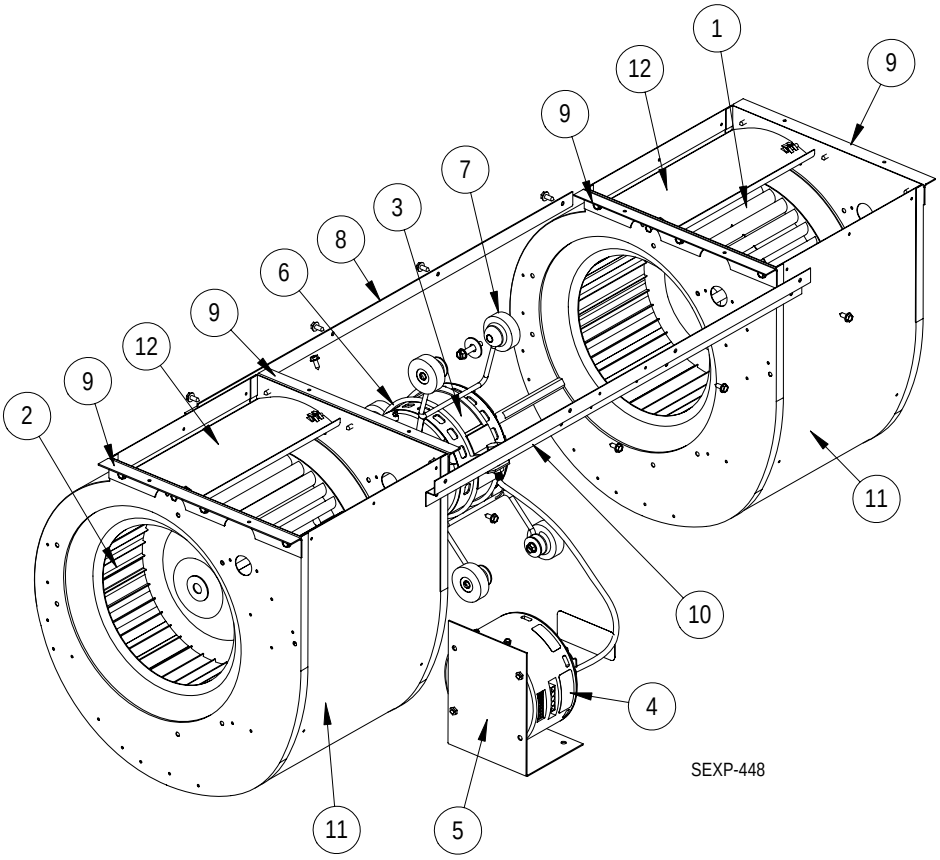
Drawing No.	Part No.	Description	WA/L3S2-A	WA/L3S2-B	WA/L3S2-C	WA/L4S2-A	WA/L4S2-B	WA/L4S2-C	WA/L5S2-A	WA/L5S2-B	WA/L5S2-C
1	5152-011	10 Inch Wheel (CW)	X	X	X	X	X	X	X	X	X
2	5152-012	10 Inch Wheel (CCW)	X	X	X	X	X	X	X	X	X
3	S8106-041-0037	1/2 HP ECM Motor with Programmed Control	X	X	X						
3	S8107-011-0039	3/4 HP ECM Motor with Programmed Control				X	X	X			
3	S8107-011-0036	3/4 HP ECM Motor with Programmed Control							X	X	X
4	C8106-041-0037	Programmed Motor Control-Only	X	X	X						
4	C8107-011-0039	Programmed Motor Control-Only				X	X	X			
4	C8107-011-0036	Programmed Motor Control-Only							X	X	X
5	113-314	Blower Motor Control Bracket	X	X	X	X	X	X	X	X	X
6	8200-040	Motor Mount	X	X	X	X	X	X	X	X	X
7	5451-011	Grommets	6	6	6	6	6	6	6	6	6
8	105-881	Back Brace	X	X	X	X	X	X	X	X	X
9	105-880	Side Angle	4	4	4	4	4	4	4	4	4
10	103-389	Front Brace	X	X	X	X	X	X	X	X	X
11	151-101	Housing	2	2	2	2	2	2	2	2	2
12	144-166	Diffuser	2	2	2	2	2	2	2	2	2