REPLACEMENT PARTS MANUAL

WALL MOUNTED
PACKAGE AIR CONDITIONER

Models:

W42A2-A	W48A2-A	W60A2-A	W70A2-A	W42A2DA	W48A2DA	W60A2DA
W42A2-B	W48A2-B	W60A2-B	W70A2-B	W42A2DB	W48A2DB	W60A2DB
W42A2-C	W48A2-C	W60A2-C	W70A2-C	W42A2DC	W48A2DC	W60A2DC
W42A2-E	W48A2-E	W60A2-E	W70A2-F			
W42A2-F	W48A2-F	W60A2-F				

Contents

Description **Page**

Cabinet Components
- Exploded View 2
- Usage List 3
- Usage List 4

Functional Components
- Exploded View 6
- Usage List 7
- Usage List 8
- Usage List 9

Control Panel
- Exploded View 10
- Usage List 11
- Usage List 12
- Usage List 13

Control Panel – Dehum. Models
- Exploded View 14
- Usage List 15

Description **Page**

Blower Assembly
- Exploded View 16
- Usage List 16

General Notes

- Revised and/or additional pages may be issued from time to time.
- A complete and current manual consists of pages shown in the following contents section.

Important

- Contact the installing and/or local Bard distributor for all parts requirements. Make sure to have the complete model and serial number available from the unit rating plates.

Bard® SINCE 1914
Climate Control Solutions

Bard Manufacturing Company, Inc.
Bryan, Ohio 43506
www.bardhvac.com

Manual: 2110-500J
Supersedes: 2110-500I
Date: 4-8-16

CABINET COMPONENTS

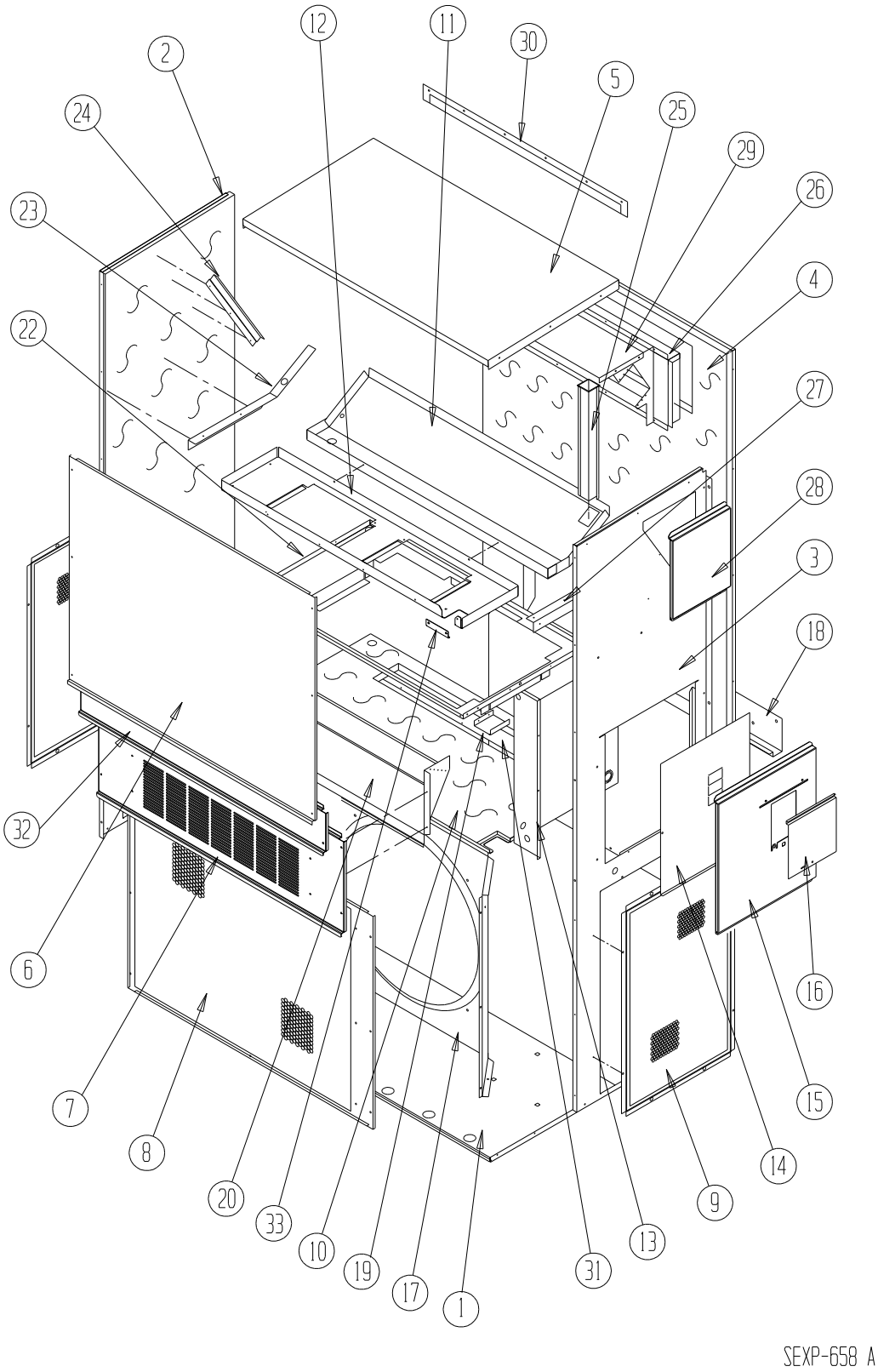

This drawing is referenced in tables on pages 3 and 4

Dwg No.	Part Number	Description	W42A2-A, B, E	W42A2-C, F	W42A2DA, B	W42A2DC	W48A2-A, B, E	W48A2-C, F	W48A2DA, B	W48A2DC
1	127-425	Lower Base	X	X	X	X	X	X	X	X
1	127-430 ③	Lower Base	X	X	X	X	X	X	X	X
2	S501-686-* ①	Left Side	X	X	X	X	X	X	X	X
2	S501-699 ②	Left Side	X	X	X	X	X	X	X	X
2	S501-701 ③	Left Side	X	X	X	X	X	X	X	X
3	S501-677-* ①	Right Side	X	X	X	X	X	X	X	X
3	S501-698 ②	Right Side	X	X	X	X	X	X	X	X
3	S501-700 ③	Right Side	X	X	X	X	X	X	X	X
4	S508-098	Back	X	X	X	X	X	X	X	X
4	S508-275 ②	Back	X	X	X	X	X	X	X	X
4	S508-221 ③	Back	X	X	X	X	X	X	X	X
5	S507-307-* ①	Top	X	X	X	X	X	X	X	X
5	S507-309 ②	Top	X	X	X	X	X	X	X	X
5	S507-310 ③	Top	X	X	X	X	X	X	X	X
6	S515-230-* ①	Upper Front	X	X	X	X	X	X	X	X
6	S514-231 ②	Upper Front	X	X	X	X	X	X	X	X
6	S514-232 ③	Upper Front	X	X	X	X	X	X	X	X
7	S553-522-* ①	Vent Option Door	X	X	X	X	X	X	X	X
7	S553-529-* ①	Vent Option Door with ERV	X	X	X	X	X	X	X	X
7	S553-525 ②	Vent Option Door	X	X	X	X	X	X	X	X
7	S553-527 ③	Vent Option Door	X	X	X	X	X	X	X	X
8	118-048-* ①	Condenser Grille	X	X	X	X	X	X	X	X
8	118-064 ②	Condenser Grille	X	X	X	X	X	X	X	X
8	118-072 ③	Condenser Grille	X	X	X	X	X	X	X	X
9	118-057-* ①	Side Grille	2	2	2	2	2	2	2	2
9	118-063 ②	Side Grille	2	2	2	2	2	2	2	2
9	118-073 ③	Side Grille	2	2	2	2	2	2	2	2
10	S521X462	Condenser Partition	X	X	X	X	X	X	X	X
11	S123-122	Drain Pan	X	X	X	X	X	X	X	X
11	S123-125 ②③	Drain Pan	X	X	X	X	X	X	X	X
12	121X463	Blower Partition	X	X	X	X	X	X	X	X
13	Control Panel Assy.	See Control Panel Assy. Drawing & Parts List	X	X	X	X	X	X	X	X
14	S132-114	Control Panel Cover (Inner)	X		X		X		X	
14	S132-171	Control Panel Cover (Inner)		X		X		X		X
15	S533-225-* ①	Control Panel Cover (Outer)	X	X	X	X	X	X	X	X
15	S533-229 ②	Control Panel Cover (Outer)	X	X	X	X	X	X	X	X
15	S533-230 ③	Control Panel Cover (Outer)	X	X	X	X	X	X	X	X
16	S153-218-* ①	Disconnect Access Door	X	X	X	X	X	X	X	X
16	S153-387 ②	Disconnect Access Door	X	X	X	X	X	X	X	X
16	S153-405 ③	Disconnect Access Door	X	X	X	X	X	X	X	X
17	125-024	Fan Shroud	X	X	X	X	X	X	X	X
17	125-058 ③	Fan Shroud	X	X	X	X	X	X	X	X
18	113-140	Bottom Mounting Bracket	X	X	X	X	X	X	X	X
19	137-209	Fill	X	X	X	X	X	X	X	X
20	BFAD-5	Fresh Air Damper Assembly	X	X	X	X	X	X	X	X
22	131X099	Filter Tray	X	X	X	X	X	X	X	X
23	105X877	Left Side Support	X	X	X	X	X	X	X	X
24	147-046	Left Evaporator Support	X	X	X	X	X	X	X	X
25	135-128	Raceway	2	2	2	2	2	2	2	2
26	S111X034	Outlet Air Frame Assembly	X	X	X	X	X	X	X	X
27	105X878	Right Side Support	X	X	X	X	X	X	X	X
28	S543-172-* ①	Right Side Cover Plate (Outer)	X	X	X	X	X	X	X	X
28	S543-176 ②	Right Side Cover Plate (Outer)	X	X	X	X	X	X	X	X
28	S543-177 ③	Right Side Cover Plate (Outer)	X	X	X	X	X	X	X	X
29	135-129	Heat Shield	X	X	X	X	X	X	X	X
30	113-150-* ①	Top Rain Flashing	X	X	X	X	X	X	X	X
30	113-359 ③	Top Rain Flashing	X	X	X	X	X	X	X	X
31	S536-258	Cond. Partition Block Off Plate	X	X	X	X	X	X	X	X
32	S553-521-* ①	Filter Door Assembly	X	X	X	X	X	X	X	X
32	S553-526 ②	Filter Door Assembly	X	X	X	X	X	X	X	X
32	S553-528 ③	Filter Door Assembly	X	X	X	X	X	X	X	X
33	105-1302	Grommet Retainer	X	X	X	X	X	X	X	X

① *Exterior cabinet parts are manufactured with various paint color options. To ensure the proper paint color is received, include the complete model and serial number of the unit for which cabinet parts are being ordered.*

② *Exterior cabinet parts are manufactured from aluminum Code "A"*

③ *Exterior cabinet parts are manufactured from stainless steel Code "S"*

CABINET COMPONENTS

Dwg No.	Part Number	Description	W60A2-A, B, E	W60A2-C, F	W60A2DA, B	W60A2DC	W70A2-A, B	W70A2-C, F
1	127-425	Lower Base	X	X	X	X	X	X
1	127-430 ③	Lower Base	X	X	X	X	X	X
2	S501-686-* ①	Left Side	X	X	X	X	X	X
2	S501-699 ②	Left Side	X	X	X	X	X	X
2	S501-701 ③	Left Side	X	X	X	X	X	X
3	S501-677-* ①	Right Side	X	X	X	X	X	X
3	S501-698 ②	Right Side	X	X	X	X	X	X
3	S501-700 ③	Right Side	X	X	X	X	X	X
4	S508-098	Back	X	X	X	X	X	X
4	S508-275 ②	Back	X	X	X	X	X	X
4	S508-221 ③	Back	X	X	X	X	X	X
5	S507-307-* ①	Top	X	X	X	X	X	X
5	S507-309 ②	Top	X	X	X	X	X	X
5	S507-310 ③	Top	X	X	X	X	X	X
6	S515-230-* ①	Upper Front	X	X	X	X	X	X
6	S514-231 ②	Upper Front	X	X	X	X	X	X
6	S514-232 ③	Upper Front	X	X	X	X	X	X
7	S553-522-* ①	Vent Option Door	X	X	X	X	X	X
7	S553-529-* ①	Vent Option Door with ERV	X	X	X	X	X	X
7	S553-525 ②	Vent Option Door	X	X	X	X	X	X
7	S553-527 ③	Vent Option Door	X	X	X	X	X	X
8	118-048-* ①	Condenser Grille	X	X	X	X	X	X
8	118-064 ②	Condenser Grille	X	X	X	X	X	X
8	118-072 ③	Condenser Grille	X	X	X	X	X	X
9	118-057-* ①	Side Grille	2	2	2	2	2	2
9	118-063 ②	Side Grille	2	2	2	2	2	2
9	118-073 ③	Side Grille	2	2	2	2	2	2
10	S521X462	Condenser Partition	X	X	X	X	X	X
11	S123-122	Drain Pan	X	X	X	X	X	X
11	S123-125 ②③	Drain Pan	X	X	X	X	X	X
12	121X463	Blower Partition	X	X	X	X	X	X
13	Control Panel Assy.	See Control Panel Assy. Drawing & Parts List	X	X	X	X	X	X
14	S132-114	Control Panel Cover (Inner)	X		X		X	
14	S132-171	Control Panel Cover (Inner)		X		X		X
15	S533-225-* ①	Control Panel Cover (Outer)	X	X	X	X	X	X
15	S533-229 ②	Control Panel Cover (Outer)	X	X	X	X	X	X
15	S533-230 ③	Control Panel Cover (Outer)	X	X	X	X	X	X
16	S153-218-* ①	Disconnect Access Door	X	X	X	X	X	X
16	S153-387 ②	Disconnect Access Door	X	X	X	X	X	X
16	S153-405 ③	Disconnect Access Door	X	X	X	X	X	X
17	125-024	Fan Shroud	X	X	X	X		
17	125-058 ③	Fan Shroud	X	X	X	X	X	X
17	125-085	Fan Shroud					X	X
18	113-140	Bottom Mounting Bracket	X	X	X	X	X	X
19	137-209	Fill	X	X	X	X	X	X
20	BFAD-5	Fresh Air Damper Assembly	X	X	X	X	X	X
22	131X099	Filter Tray	X	X	X	X	X	X
23	105X877	Left Side Support	X	X	X	X	X	X
24	147-046	Left Evaporator Support	X	X	X	X	X	X
25	135-128	Raceway	2	2	2	2	2	2
26	S111X034	Outlet Air Frame Assembly	X	X	X	X	X	X
27	105X878	Right Side Support	X	X	X	X	X	X
28	S543-172-* ①	Right Side Cover Plate (Outer)	X	X	X	X	X	X
28	S543-176 ②	Right Side Cover Plate (Outer)	X	X	X	X	X	X
28	S543-177 ③	Right Side Cover Plate (Outer)	X	X	X	X	X	X
29	135-129	Heat Shield	X	X	X	X	X	X
30	113-150-* ①	Top Rain Flashing	X	X	X	X	X	X
30	113-359 ③	Top Rain Flashing	X	X	X	X	X	X
31	S536-258	Cond. Partition Block Off Plate	X	X	X	X	X	X
32	S553-521-* ①	Filter Door Assembly	X	X	X	X	X	X
32	S553-526 ②	Filter Door Assembly	X	X	X	X	X	X
32	S553-528 ③	Filter Door Assembly	X	X	X	X	X	X
33	105-1302	Grommet Retainer	X	X	X	X	X	X

① *Exterior cabinet parts are manufactured with various paint color options. To ensure the proper paint color is received, include the complete model and serial number of the unit for which cabinet parts are being ordered.*

② *Exterior cabinet parts are manufactured from aluminum Code "A"*

③ *Exterior cabinet parts are manufactured from stainless steel Code "S"*

This table references drawing on page 2

This page intentionally left blank

FUNCTIONAL COMPONENTS

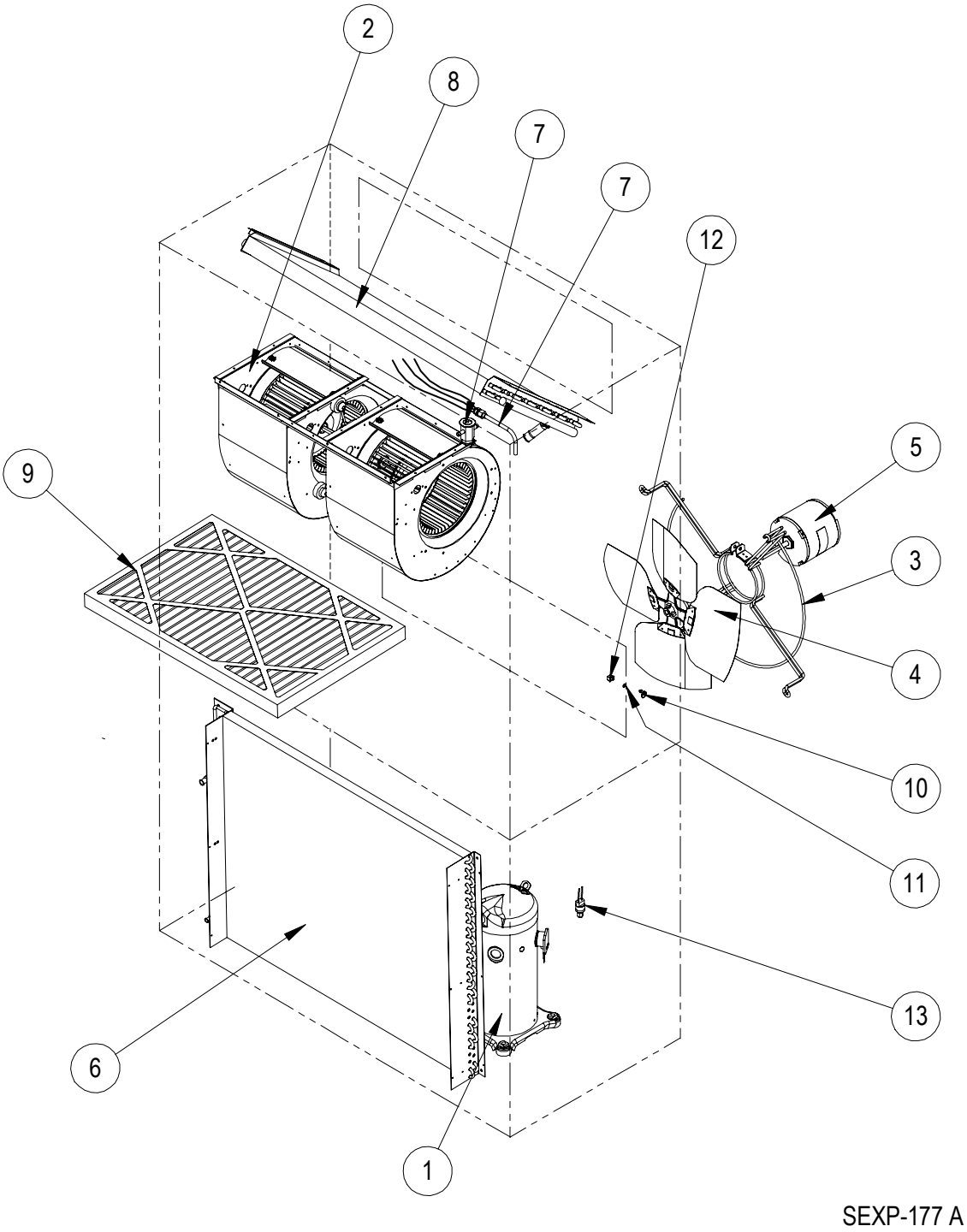

This drawing is referenced in tables on pages 7, 8 and 9

Dwg No.	Part Number	Description	W42A2-A	W42A2-B, E	W42A2-C	W42A2-F	W42A2DA	W42A2DB	W42A2DC
1	8000-318	Compressor	X				X		
1	8000-319	Compressor		X				X	
1	8000-320	Compressor			X	X			X
2	S900-320	Blower Assembly	X	X		X	X	X	
2	S900-321	Blower Assembly			X				X
3	8200-004	Fan Motor Mount	X	X	X	X	X	X	X
4	5151-060	Fan Blade	X	X	X	X	X	X	X
5	8105-030	Condenser Motor			X				X
5	8105-039	Condenser Motor	X	X		X	X	X	
6	5051-179BX	Condenser Coil	X	X	X	X	X	X	X
7	5651-208	Expansion Valve Assembly					X	X	X
7	800-0420	Distributor Assembly	X	X	X	X			
7	800-0421	Distributor Assembly					X	X	X
8	917-0205BX	Evaporator Coil					X	X	X
8	917-0206BX	Evaporator Coil	X	X	X	X			
9	7004-016	Air Filter 1" Throw-Away	X	X	X	X	X	X	X
9	7003-030	Air Filter 1" Washable	X	X	X	X	X	X	X
9	7004-027	Air Filter 2" Pleated	X	X	X	X	X	X	X
10	1171-022	1/4 Turn Fastener	X	X	X	X	X	X	X
11	1171-024	1/4 Turn Retainer	X	X	X	X	X	X	X
12	1171-023	1/4 Receptacle	X	X	X	X	X	X	X
13	1804-0385	High Pressure Switch (Flare)	X	X	X	X	X	X	X
13	1804-0386	Low Pressure Switch (Flare)	X	X	X	X	X	X	X
NS	5201-022	Filter Drier	X	X	X	X	X	X	X
NS	5650-042	Rev. Valve Solenoid, Red Casing (Ranco)					X	X	X
NS	5650-046	Rev. Valve Solenoid, Black Casing (San Hua)					X	X	X
NS	5650-051	Dehum. Valve 4-Pipe ½ x ½ with 24V Solenoid Coil					X	X	X
NS	5651-219	Check Valve					2	2	2
NS	CMA-28	Low Ambient Control (Flare) ①	X	X	X	X			
NS	CMH-20	Low Ambient Control (Flare) ①					X	X	X
NS	5451-024	Tubing Isolation Grommet	2	2	2	2	2	2	2

NS – Not Shown

① – Optional on these models

FUNCTIONAL COMPONENTS

Dwg No.	Part Number	Description	W48A2-A	W48A2-B, E	W48A2-C	W48A2-F	W48A2DA	W4828DB	W48A2DC	W60A2-A	W60A2-B, E	W60A2-C	W60A2-F	W60A2DA	W60A2DB	W60A2DC
1	8000-324	Compressor								X				X		
1	8000-325	Compressor									X				X	
1	8000-401	Compressor		X				X								
1	8000-402	Compressor			X	X			X							
1	8000-400	Compressor	X				X									
1	8000-326	Compressor										X	X			X
2	S900-320	Blower Assembly	X	X		X	X	X								
2	S900-321	Blower Assembly			X				X							
2	S900-185	Blower Assembly								X	X		X	X	X	
2	S900-186	Blower Assembly										X				X
3	8200-004	Fan Motor Mount	X	X	X	X	X	X	X	X	X	X	X	X	X	X
4	5151-060	Fan Blade	X	X	X	X	X	X	X	X	X	X	X	X	X	X
5	8105-030	Condenser Motor			X				X			X				X
5	8105-039	Condenser Motor	X	X		X	X	X		X	X		X	X	X	
6	5051-179BX	Condenser Coil	X	X	X	X	X	X	X							
6	5051-180BX	Condenser Coil								X	X	X	X	X	X	X
7	800-0422	Distributor Assembly	X	X	X	X										
7	800-0421	Distributor Assembly					X	X	X							
7	800-0423	Distributor Assembly								X	X	X	X			
7	800-0430	Distributor Assembly												X	X	X
7	5651-223	Expansion Valve					X	X	X							
7	5651-241	Expansion Valve												X	X	X
8	917-0207BX	Evaporator Coil	X	X	X	X										
8	917-0208BX	Evaporator Coil								X	X	X	X			
8	917-0205BX	Evaporator Coil					X	X	X							
8	917-0203BX	Evaporator Coil												X	X	X
9	7004-016	Air Filter 1" Throw-Away	X	X	X	X	X	X	X	X	X	X	X	X	X	X
9	7003-030	Air Filter 1" Washable	X	X	X	X	X	X	X	X	X	X	X	X	X	X
9	7004-027	Air Filter 2" Pleated	X	X	X	X	X	X	X	X	X	X	X	X	X	X
10	1171-022	1/4 Turn Fastener	X	X	X	X	X	X	X	X	X	X	X	X	X	X
11	1171-024	1/4 Turn Retainer	X	X	X	X	X	X	X	X	X	X	X	X	X	X
12	1171-023	1/4 Receptacle	X	X	X	X	X	X	X	X	X	X	X	X	X	X
13	1804-0385	High Pressure Switch (Flare)	X	X	X	X	X	X	X	X	X	X	X	X	X	X
13	1804-0386	Low Pressure Switch (Flare)	X	X	X	X	X	X	X	X	X	X	X	X	X	X
NS	5201-022	Filter Drier	X	X	X	X	X	X	X	X	X	X	X	X	X	X
NS	5650-042	Rev. Valve Solenoid, Red Casing (Ranco)					X	X	X					X	X	X
NS	5650-046	Rev. Valve Solenoid, Black Casing (San Hua)					X	X	X					X	X	X
NS	5650-051	Dehum. Valve 4-Pipe ½ x ½ with 24V Solenoid Coil					X	X	X					X	X	X
NS	CMA-28	Low Ambient Control (Flare) ①	X	X	X	X				X	X	X	X			
NS	CMH-20	Low Ambient Control (Flare) ①					X	X	X					X	X	X
NS	5651-219	Check Valve					2	2	2					2	2	2
NS	5451-024	Tubing Isolation Grommet	2	2	2	2	2	2	2	2	2	2	2	2	2	2

NS – Not Shown

① – Optional on these models

This table references drawing on page 6

Dwg No.	Part Number	Description	W70A2-A	W70A2-B	W70A2-C	W70A2-F
1	8000-403	Compressor	X			
1	8000-404	Compressor		X		
1	8000-405	Compressor			X	X
2	S900-185	Blower Assembly	X	X		X
2	S900-186	Blower Assembly			X	
3	8200-049	Fan Motor Mount	X	X	X	X
4	5151-062	Fan Blade	X	X	X	X
5	8106-067	Condenser Motor			X	
5	8106-016	Condenser Motor	X	X		X
6	5051-180BX	Condenser Coil	X	X	X	X
7	800-0425	Distributor Assembly	X	X	X	X
8	917-0209BX	Evaporator Coil	X	X	X	X
9	7004-016	Air Filter 1" Throw-Away	X	X	X	X
9	7003-030	Air Filter 1" Washable	X	X	X	X
9	7004-027	Air Filter 2" Pleated	X	X	X	X
10	1171-022	1/4 Turn Fastener	X	X	X	X
11	1171-024	1/4 Turn Retainer	X	X	X	X
12	1171-023	1/4 Receptacle	X	X	X	X
NS	5201-022	Filter Drier	X	X	X	X
NS	CMA-28	Low Ambient Control (Flare) ①	X	X	X	X
NS	1804-0385	High Pressure Switch (Flare)	X	X	X	X
NS	1804-0386	Low Pressure Switch (Flare)	X	X	X	X
NS	5451-024	Tubing Isolation Grommet	2	2	2	2
NS	CMC-29	Freeze Thermostat Kit	X	X	X	X

NS – Not Shown
① – Optional on these models

This table references drawing on page 6

CONTROL PANEL

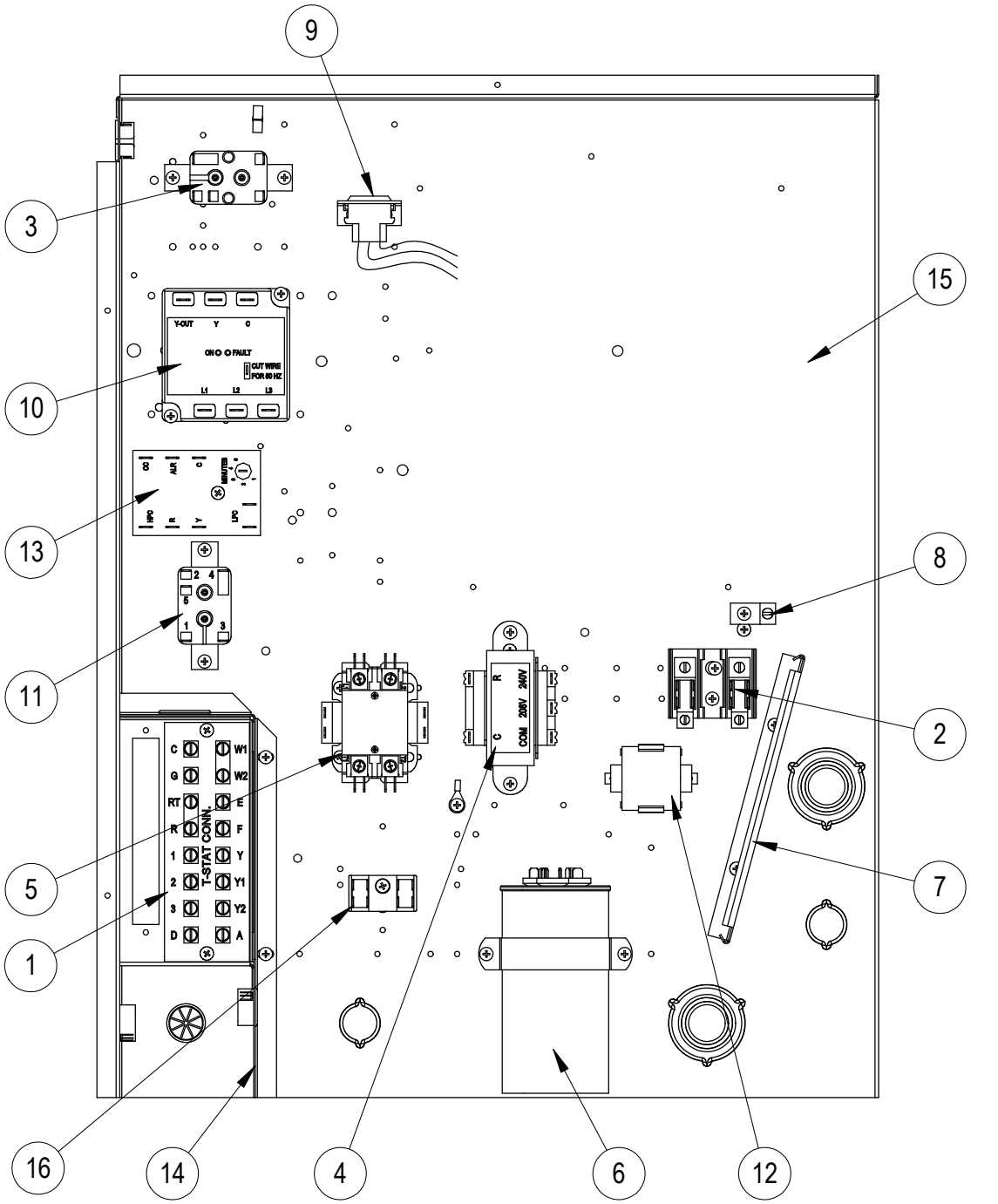

SEXP-659

This drawing is referenced in tables on pages 11, 12 and 13

Dwg No.	Part Number	Description	W42A2-A	W42A2-B	W42A2-C	W42A2-E	W42A2-F	W48A2-A	W48A2-B	W48A2-C	W48A2-E	W48A2-F
1	8607-034	Low Voltage Terminal Strip	X	X	X	X	X	X	X	X	X	X
2	8607-013	Terminal Block 2 Pole	X				2	X				2
2	8607-014	Terminal Block 3 Pole		X	X	X			X	X	X	
2	8607-015	Phenolic Insulator			X					X		
3	8201-009	Blower Control Relay	X	X		X	X	X	X		X	X
3	8201-032	Blower Control Relay			X					X		
4	8407-034	Transformer	X	X		X	X	X	X		X	X
4	8407-042	Transformer			X					X		
5	8401-002	Compressor Contactor		X	X	X	X		X	X	X	X
5	8401-025	Compressor Contactor	X					X				
6	8552-005	Outdoor Motor Capacitor		X		X	X		X		X	X
6	8552-026	Outdoor Motor Capacitor			X					X		
6	8552-079	Compressor Capacitor	X									
6	8552-089	Compressor Capacitor						X				
7	135-130	Wire Shield	X	X	X	X	X	X	X	X	X	X
8	8611-006	Ground Terminal	X	X	X	X	X	X	X	X	X	X
9	3000-1017	6 Pin Connector	X	X	X	X	X	X	X	X	X	X
10	8201-126	Phase Monitor		X	X	X	X		X	X	X	X
11	8201-062	Alarm Relay ①	X	X	X	X	X	X	X	X	X	X
12	8551-004	Start Device	X					X				
13	8201-148	Compressor Control Module	X	X	X	X	X	X	X	X	X	X
14	117X333	Low Voltage Box	X	X	X	X	X	X	X	X	X	X
15	117X340	Control Panel	X	X	X	X	X	X	X	X	X	X
16	8607-017	Terminal Block ①	X	X	X	X	X	X	X	X	X	X
NS	8615-040	Circuit Breaker 50A 2 Pole ②	X					X				
NS	8615-042	Circuit Breaker 35A 3 Pole ②		X		X			X		X	
NS	8615-067	Toggle Disconnect ②			X		X			X		X
NS	4095-163	Wiring Diagram	X					X				
NS	4095-255	Wiring Diagram		X					X			
NS	4095-357	Wiring Diagram			X					X		
NS	4095-256	Wiring Diagram				X					X	
NS	4095-635	Wiring Diagram					X					X

① Optional on these models.

② Circuit breakers listed are for units without electric heat "OZ" models. See heater replacement parts manual for units with electric heat.

NS – Not Shown

CONTROL PANEL

Dwg No.	Part Number	Description	W60A2-A	W60A2-B	W60A2-C	W60A2-E	W60A2-F
1	8607-034	Low Voltage Terminal Strip	X	X	X	X	X
2	8607-013	Terminal Block 2 Pole	X				2
2	8607-014	Terminal Block 3 Pole		X	X	X	
2	8607-015	Phenolic Insulator			X		
3	8201-009	Blower Control Relay	X	X		X	X
3	8201-032	Blower Control Relay			X		
4	8407-034	Transformer	X	X		X	X
4	8407-042	Transformer			X		
5	8401-002	Compressor Contactor		X	X	X	X
5	8401-025	Compressor Contactor	X				
6	8552-058	Compressor Capacitor	X				
6	8552-005	Outdoor Motor Capacitor		X			
6	8552-026	Outdoor Motor Capacitor			X		
6	8552-005	Outdoor Motor Capacitor				X	X
7	135-130	Wire Shield	X	X	X	X	X
8	8611-006	Ground Terminal	X	X	X	X	X
9	3000-1017	6 Pin Connector	X	X	X	X	X
10	8201-126	Phase Monitor		X	X	X	X
11	8201-062	Alarm Relay ①	X	X	X	X	X
12	8551-004	Start Device (PTCR) ①	X				
13	8201-148	Compressor Control Module	X	X	X	X	X
14	117X333	Low Voltage Box	X	X	X	X	X
15	117X340	Control Panel	X	X	X	X	X
16	8607-017	Terminal Block ①	X	X	X	X	X
NS	8615-041	Circuit Breaker 60A 2 Pole ②	X				
NS	8615-043	Circuit Breaker 40A 3 Pole ②		X		X	
NS	8615-067	Toggle Disconnect ②			X		X
NS	4095-163	Wiring Diagram	X				
NS	4095-255	Wiring Diagram		X			
NS	4095-357	Wiring Diagram			X		
NS	4095-256	Wiring Diagram				X	
NS	4095-635	Wiring Diagram					X

① Optional on these models.

② Circuit breakers listed are for units without electric heat "OZ" models. See heater replacement parts manual for units with electric heat.

NS – Not Shown

This table references drawing on page 10

Dwg No.	Part Number	Description	W70A2-A	W70A2-B	W70A2-C	W70A2-F
1	8607-034	Low Voltage Terminal Strip	X	X	X	X
2	8607-013	Terminal Block 2 Pole	X			2
2	8607-014	Terminal Block 3 Pole		X	X	
2	8607-015	Phenolic Insulator			X	
3	8201-009	Blower Control Relay	X	X		X
3	8201-032	Blower Control Relay			X	
4	8407-034	Transformer	X	X		X
4	8407-042	Transformer			X	
5	8401-002	Compressor Contactor		X	X	X
5	8401-025	Compressor Contactor	X			
6	8552-082	Compressor Capacitor	X			
6	8552-004	Outdoor Motor Capacitor		X		
6	8552-005	Outdoor Motor Capacitor			X	X
7	135-130	Wire Shield	X	X	X	X
8	8611-006	Ground Terminal	X	X	X	X
9	3000-1017	6 Pin Connector	X	X	X	X
10	8201-126	Phase Monitor		X	X	X
11	8201-062	Alarm Relay ①	X	X	X	X
12	8551-004	Start Device (PTCR) ①	X			
13	8201-148	Compressor Control Module	X	X	X	X
14	117X333	Low Voltage Box	X	X	X	X
15	117X340	Control Panel	X	X	X	X
16	8607-017	Terminal Block ①	X	X	X	X
NS	8615-041	Circuit Breaker 60A 2 Pole ②	X			
NS	8615-045	Circuit Breaker 50A 3 Pole ②		X		
NS	8615-067	Toggle Disconnect ②			X	X
NS	4095-165	Wiring Diagram	X			
NS	4095-257	Wiring Diagram		X		
NS	4095-358	Wiring Diagram			X	
NS	4095-259	Wiring Diagram				X

① Optional on these models.

② Circuit breakers listed are for units without electric heat "OZ" models. See heater replacement parts manual for units with electric heat.

NS – Not Shown

This table references drawing on page 10

CONTROL PANEL – DEHUM. MODELS

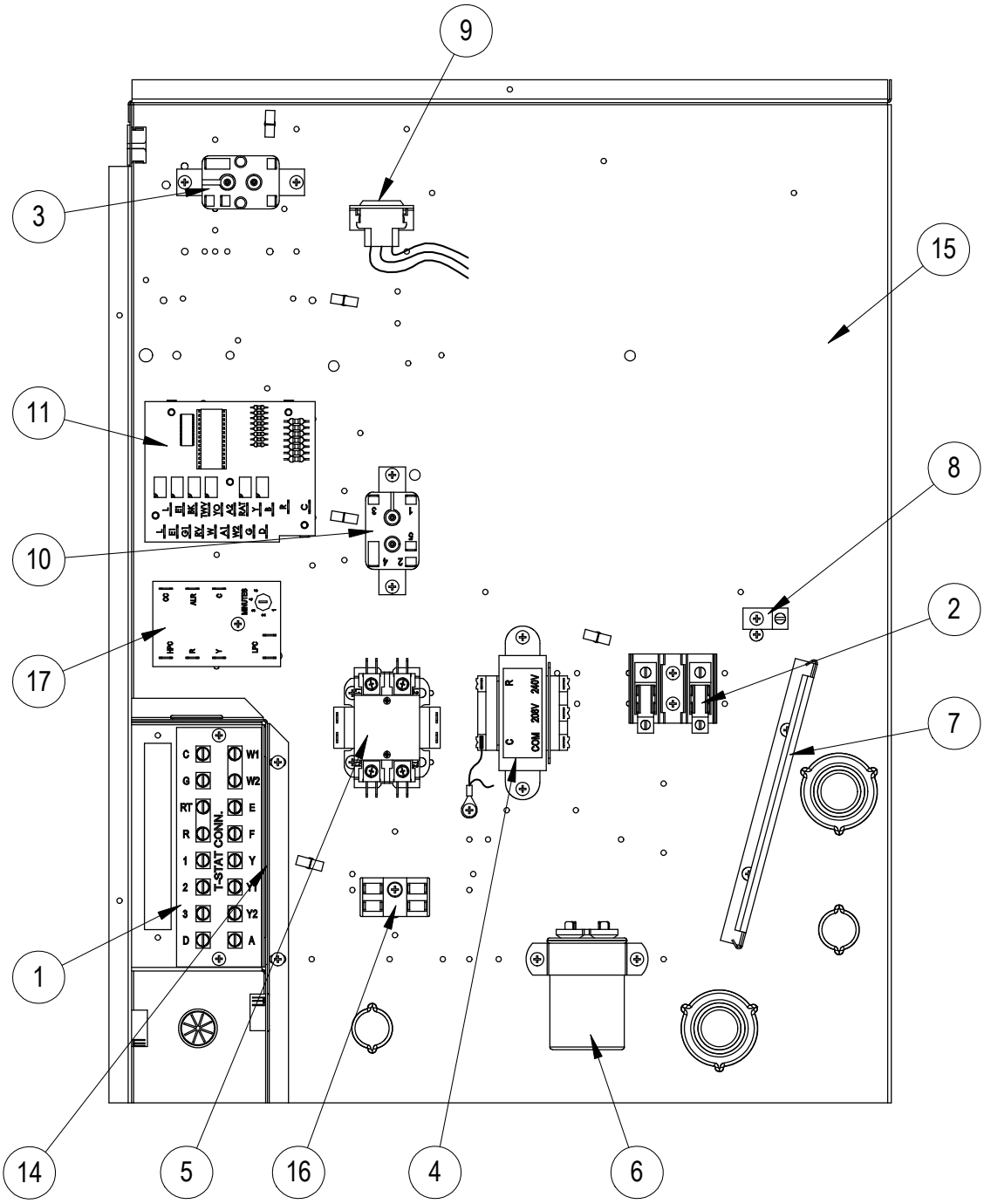

SEXP-660

Dwg No.	Part Number	Description	W42A2DA	W42A2DB	W42A2DC	W48A2DA	W48A2DB	W48A2DC	W60A2DA	W60A2DB	W60A2DC
1	8607-034	Low Voltage Terminal Strip	X	X	X	X	X	X	X	X	X
2	8607-013	Terminal Block 2 Pole	X			X			X		
2	8607-014	Terminal Block 3 Pole		X	X		X	X		X	X
2	8607-015	Phenolic Insulator			X			X			X
3	8201-009	Blower Control Relay	X	X		X	X		X	X	
3	8201-032	Blower Control Relay			X			X			X
4	8407-035	Transformer	X	X		X	X		X	X	
4	8407-042	Transformer			X			X			X
5	8401-002	Compressor Contactor		X	X		X	X		X	X
5	8401-025	Compressor Contactor	X			X			X		
6	8552-079	Compressor Capacitor 45/10 MFD-370V	X								
6	8552-005	Outdoor Motor Capacitor 10 MFD-370V		X			X				
6	8552-026	Outdoor Motor Capacitor 15 MFD-370V			X			X			X
6	8552-089	Compressor Capacitor 70/10 MFD-370V				X					
6	8552-058	Compressor Capacitor 80/10 MFD-440V							X		
6	8552-004	Outdoor Motor Capacitor 7.5 MFD-370V								X	
7	135-130	Wire Shield	X	X	X	X	X	X	X	X	X
8	8611-006	Ground Terminal	X	X	X	X	X	X	X	X	X
9	3000-1017	6 Pin Connector	X	X	X	X	X	X	X	X	X
10	8201-062	Relay	X	X	X	X	X	X	X	X	X
11	8201-113	Logic Board	X	X	X	X	X	X	X	X	X
14	117X333	Low Voltage Box	X	X	X	X	X	X	X	X	X
15	117X340	Control Panel	X	X	X	X	X	X	X	X	X
16	8607-017	Terminal Block (Optional)	X	X	X	X	X	X	X	X	X
17	8201-148	Compressor Control Module	X	X	X	X	X	X	X	X	X
NS	8615-040	Circuit Breaker 50A 2 Pole ①	X			X					
NS	8615-042	Circuit Breaker 35A 3 Pole ①		X			X				
NS	8615-067	Toggle Disconnect ①			X			X			X
NS	8615-041	Circuit Breaker 60A 2 Pole ①							X		
NS	8615-044	Circuit Breaker 45A 3 Pole ①								X	
NS	4095-164	Wiring Diagram	X			X			X		
NS	4095-258	Wiring Diagram		X			X			X	
NS	4095-359	Wiring Diagram			X			X			X

① Circuit breakers listed are for units without electric heat "OZ" models. See heater replacement parts manual for units with electric heat.

NS – Not Shown

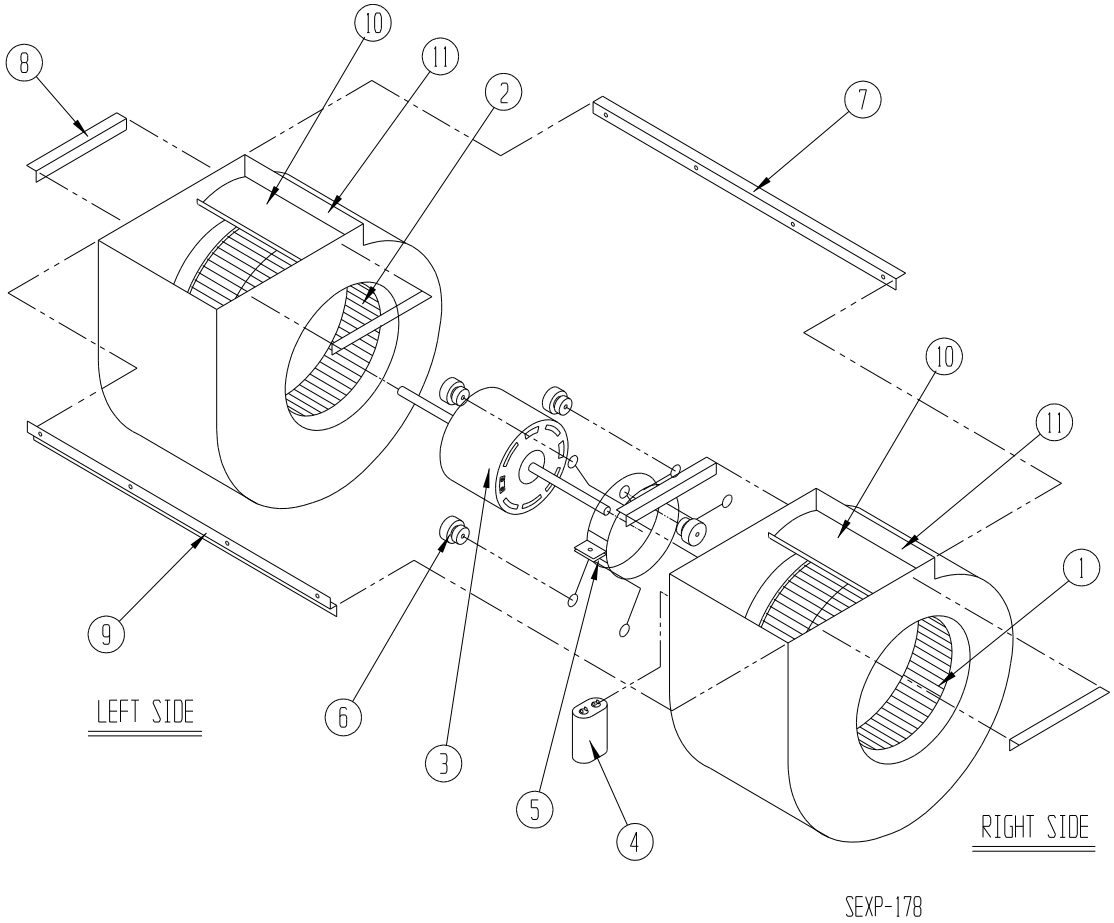

Dwg No.	Part Number	Description	900-320	900-321	900-185	900-186
1	5152-011	10 Inch Wheel (CW)			X	X
1	5152-057	9 Inch Wheel (CW)	X	X		
2	5152-012	10 Inch Wheel (CW)			X	X
2	5152-058	9 Inch Wheel (CW)	X	X		
3	8105-061	Blower Motor (230/208)	X			
3	8105-062	Blower Motor (460)		X		
3	8106-046	Blower Motor (230/208)			X	
3	8106-025	Blower Motor (460)				X
4	8552-091	Capacitor	X	X	X	
4	8552-005	Capacitor				X
5	8200-040	Motor Mount	X	X	X	X
6	5451-011	Grommets	6	6	6	6
7	105-881	Back Brace	X	X	X	X
8	105-880	Side Angle	4	4	4	4
9	103-389	Front Brace	X	X	X	X
10	151-101	Housing	2	2	2	2
11	144-166	Diffuser	2	2	2	2