REPLACEMENT PARTS MANUAL

WALL MOUNTED PACKAGE HEAT PUMPS

Models: SH381D
SH431D
SH491D

General Notes

- Revised and/or additional pages may be issued from time to time.
- A complete and current manual consists of pages shown in the following contents section.

Important

- Contact the installing and/or local Bard distributor for all parts requirements. Make sure you have the complete model and serial number available from the unit rating plates.

Contents

Description *Page*

Cabinet Components
- Exploded View 2
- Usage List 3

Functional Components
- Exploded View 4
- Usage List 5

Control Panel
- Layout 6
- Usage List 7

Blower Assembly
- Exploded View 8
- Usage List 8

Bard Manufacturing Company, Inc.
Bryan, Ohio 43506

Since 1914...Moving ahead, just as planned.

Manual: 2110-541E
Supersedes: 2110-541D
File: Tab 17
Date: 01-16-07

CABINET COMPONENTS

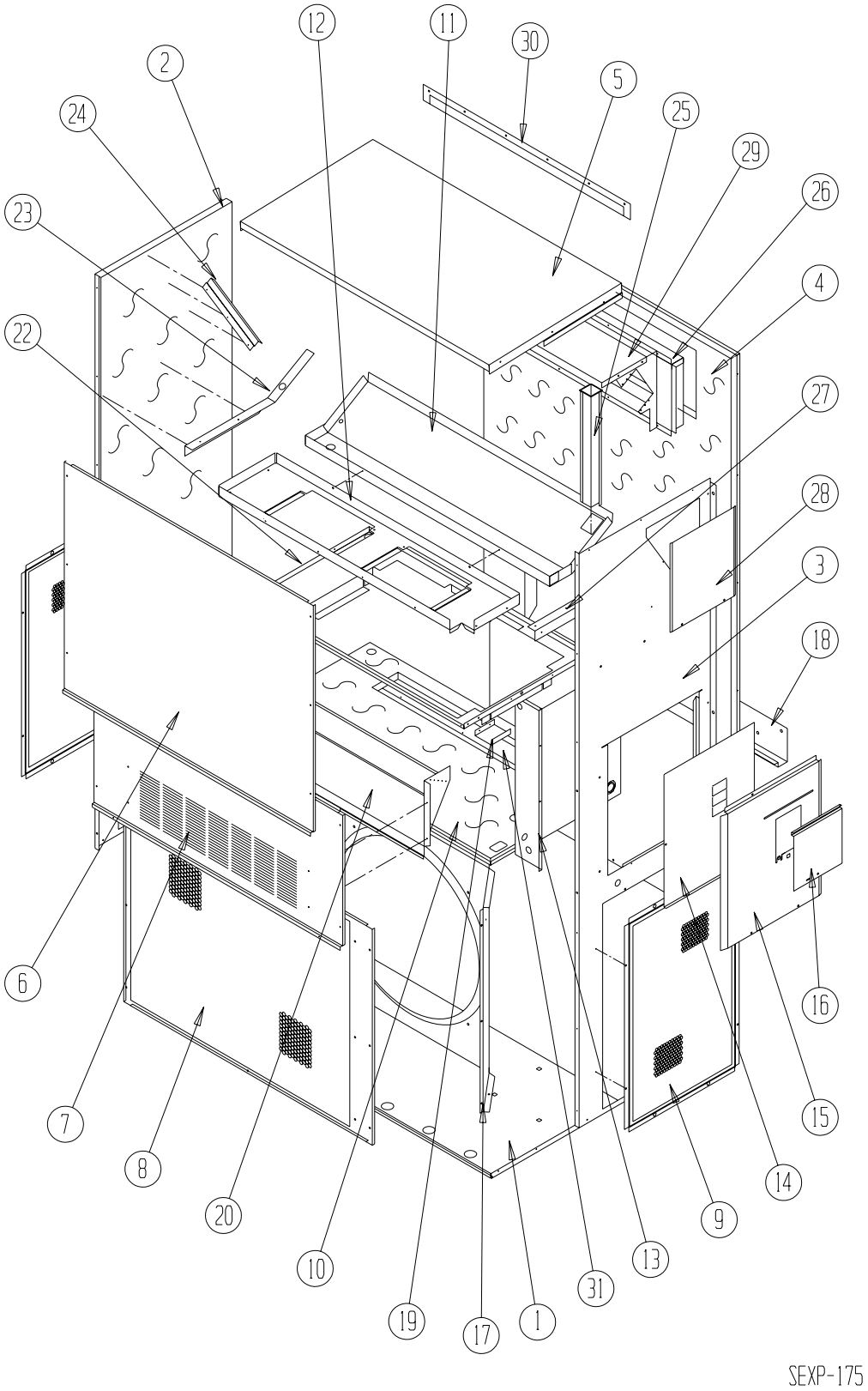

Dwg. No.	Part Number	Description	SH381DA, DB	SH381DC	SH431DA, DB	SH431DC	SH491DA, DB	SH491DC
1	S127X214	Lower Base	X	X	X	X	X	X
2	S500-262-* ①	Left Side	X	X	X	X	X	X
3	S500-261-* ①	Right Side	X	X	X	X	X	X
4	S508-098	Back	X	X	X	X	X	X
5	S506-142-* ①	Top	X	X	X	X	X	X
6	S514-077-* ①	Upper Front	X	X	X	X	X	X
7	S552-224-* ①	Service Door	X	X	X	X	X	X
8	118-048-* ①	Condenser Grille	X	X	X	X	X	X
9	118-057-* ①	Side Grille	2	2	2	2	2	2
10	S521X258	Condenser Partition	X	X	X	X	X	X
11	S123-102	Drain Pan	X	X	X	X	X	X
12	121X216	Blower Partition	X	X	X	X	X	X
13	Control Panel Assembly	See Control Panel Assembly Drawing and Parts List	X	X	X	X	X	X
14	S132-114	Control Panel Cover (Inner)	X		X		X	
14	S132-171	Control Panel Cover (Inner)		X		X		X
15	S533-113-* ①	Control Panel Cover (Outer)	X	X	X	X	X	X
16	S153-218-* ①	Disconnect Access Door	X	X	X	X	X	X
17	125-024	Fan Shroud	X	X	X	X	X	X
18	113-140	Bottom Mounting Bracket	X	X	X	X	X	X
19	137-209	Fill	X	X	X	X	X	X
20	BFAD-5	Fresh Air Damper Assembly	X	X	X	X	X	X
22	131X099	Filter Tray	X	X	X	X	X	X
23	105X877	Left Side Support	X	X	X	X	X	X
24	147-046	Left Evaporator Support	X	X	X	X	X	X
25	135-128	Raceway	X	X	X	X	X	X
26	S111X034	Outlet Air Frame Assembly	X	X	X	X	X	X
27	105X878	Right Side Support	X	X	X	X	X	X
28	S143-042-* ①	Right Side Cover Plate (Outer)	X	X	X	X	X	X
29	135-129	Heat Shield	X	X	X	X	X	X
30	113-150-* ①	Top Rain Flashing	X	X	X	X	X	X
NS	S536-258	Blank Off Plate	X	X	X	X	X	X

① *Exterior cabinet parts are manufactured with various paint color options. To insure that you receive the proper paint color, you must include the complete model and serial number of the unit for which cabinet parts are being ordered.*

FUNCTIONAL COMPONENTS

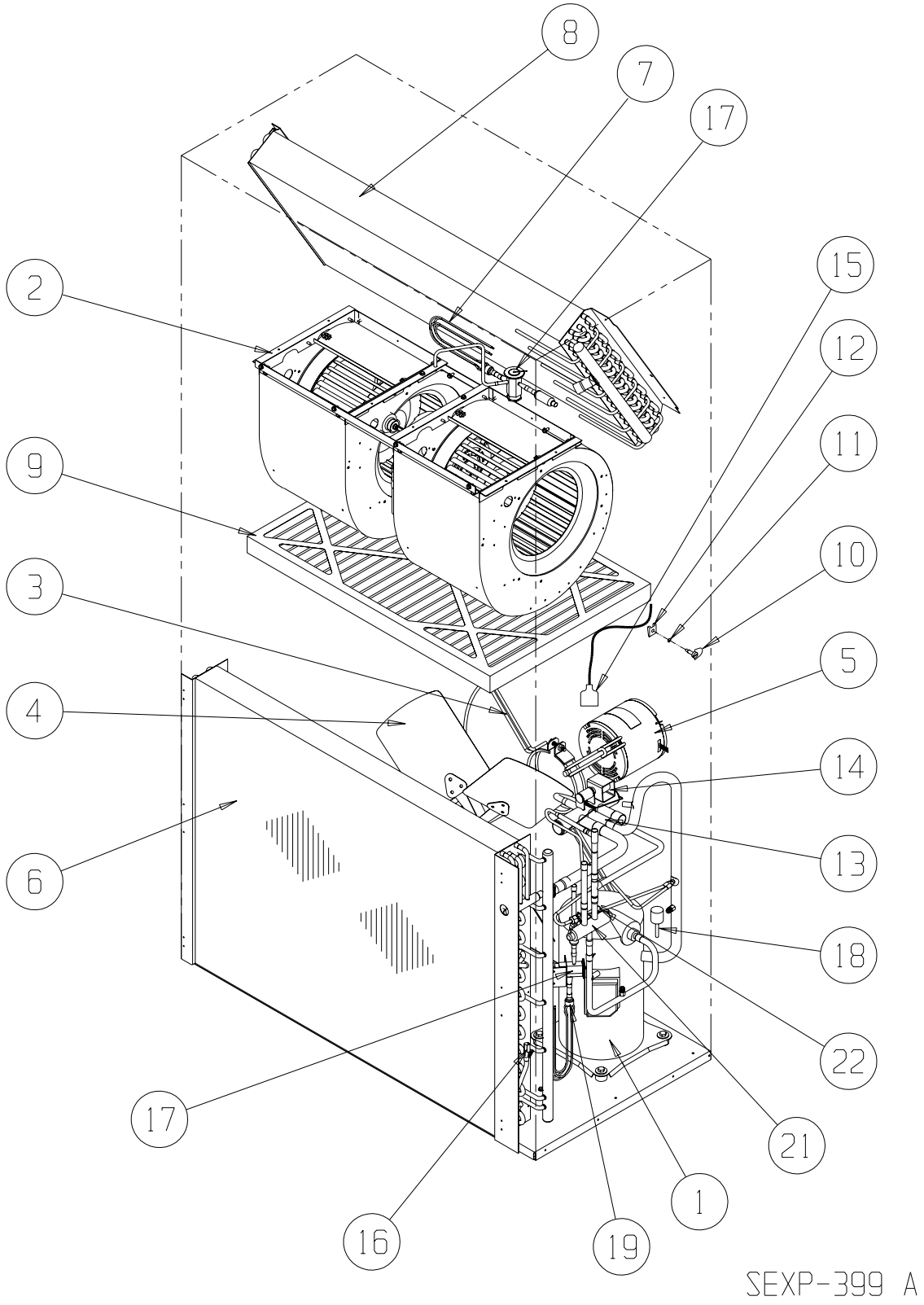

Dwg. No.	Part No.	Description	SH381DA	SH381DB	SH381DC	SH431DA	SH431DB	SH431DC	SH491DA	SH491DB	SH491DC
1	8000-218	Compressor							X		
1	8000-221	Compressor								X	
1	8000-222	Compressor									X
1	8000-175	Compressor	X								
1	8000-163	Compressor		X							
1	8000-164	Compressor			X						
1	8000-176	Compressor				X					
1	8000-229	Compressor					X				
1	8000-230	Compressor						X			
2	S900-242	Blower Assembly	X	X		X	X		X	X	
2	S900-243	Blower Assembly			X			X			X
3	8200-004	Fan Motor Mount	X	X	X	X	X	X	X	X	X
4	5151-027	Fan Blade	X	X	X	X	X	X	X	X	X
5	8105-039	Condenser Motor	X	X		X	X		X	X	
5	8105-030	Condenser Motor			X			X			X
6	5051-107BX	Condenser Coil	X	X	X	X	X	X			
6	5051-077BX	Condenser Coil							X	X	X
7	800-0287	Cooling Distributor Assembly	X	X	X						
7	800-0288	Cooling Distributor Assembly				X	X	X	X	X	X
8	917-0042BX	Evaporator Coil Assembly	X	X	X						
8	917-0044BX	Evaporator Coil Assembly				X	X	X	X	X	X
9	7004-016	Air Filter 1" Throw-Away	X	X	X	X	X	X	X	X	X
9	7003-030	Air Filter 1" Washable	X	X	X	X	X	X	X	X	X
9	7004-027	Air Filter 2" Pleated	X	X	X	X	X	X	X	X	X
10	1171-022	1/4 Turn Fastener	X	X	X	X	X	X	X	X	X
11	1171-024	1/4 Turn Retainer	X	X	X	X	X	X	X	X	X
12	1171-023	1/4 Receptacle	X	X	X	X	X	X	X	X	X
13	5650-040	Reversing Valve with 24V Solenoid Coil	X	X	X	X	X	X			
13	5650-041	Reversing Valve with 24V Solenoid Coil							X	X	X
14	5650-042	Rev. Valve Solenoid, Red Casing (Ranco)	X	X	X	X	X	X	X	X	X
14	5650-043	Rev. Valve Solenoid, Black Casing (Wilspec)	X	X	X	X	X	X	X	X	X
14	5650-046	Rev. Valve Solenoid, Black Casing (San Hua)	X	X	X	X	X	X	X	X	X
15	5650-037	Molded Plug 36" Lead	2	2	2	2	2	2	2	2	2
16	8620-095	Defrost Sensor	X	X	X	X	X	X	X	X	X
17	5651-102	Expansion Valve	2	2	2	2	2	2			
17	5651-103	Expansion Valve							2	2	2
18	1804-0106	High Pressure Switch (Flare) ①	X	X	X	X	X	X	X	X	X
19	800-0210	Heating Distributor Assembly	X	X	X	X	X	X			
19	800-0211	Heating Distributor Assembly							X	X	X
20	800-0325	Drain Back Assembly	X	X	X	X	X	X	X	X	X
21	5650-045	Three-Way Valve with 24V Solenoid Coil	X	X	X	X	X	X	X	X	X
22	5650-042	Rev. Valve Solenoid, Red Casing (Ranco)	X	X	X	X	X	X	X	X	X
22	5650-043	Rev. Valve Solenoid, Black Casing (Wilspec)	X	X	X	X	X	X	X	X	X
22	5650-046	Rev. Valve Solenoid, Black Casing (San Hua)	X	X	X	X	X	X	X	X	X
NS	1804-0107	Low Pressure Switch (Flare) ①	X	X	X	X	X	X	X	X	X
NS	CMH-7	Low Ambient Switch (Flare) ①	X	X	X	X	X	X	X	X	X

NS – Not Shown
① – Optional

CONTROL PANEL

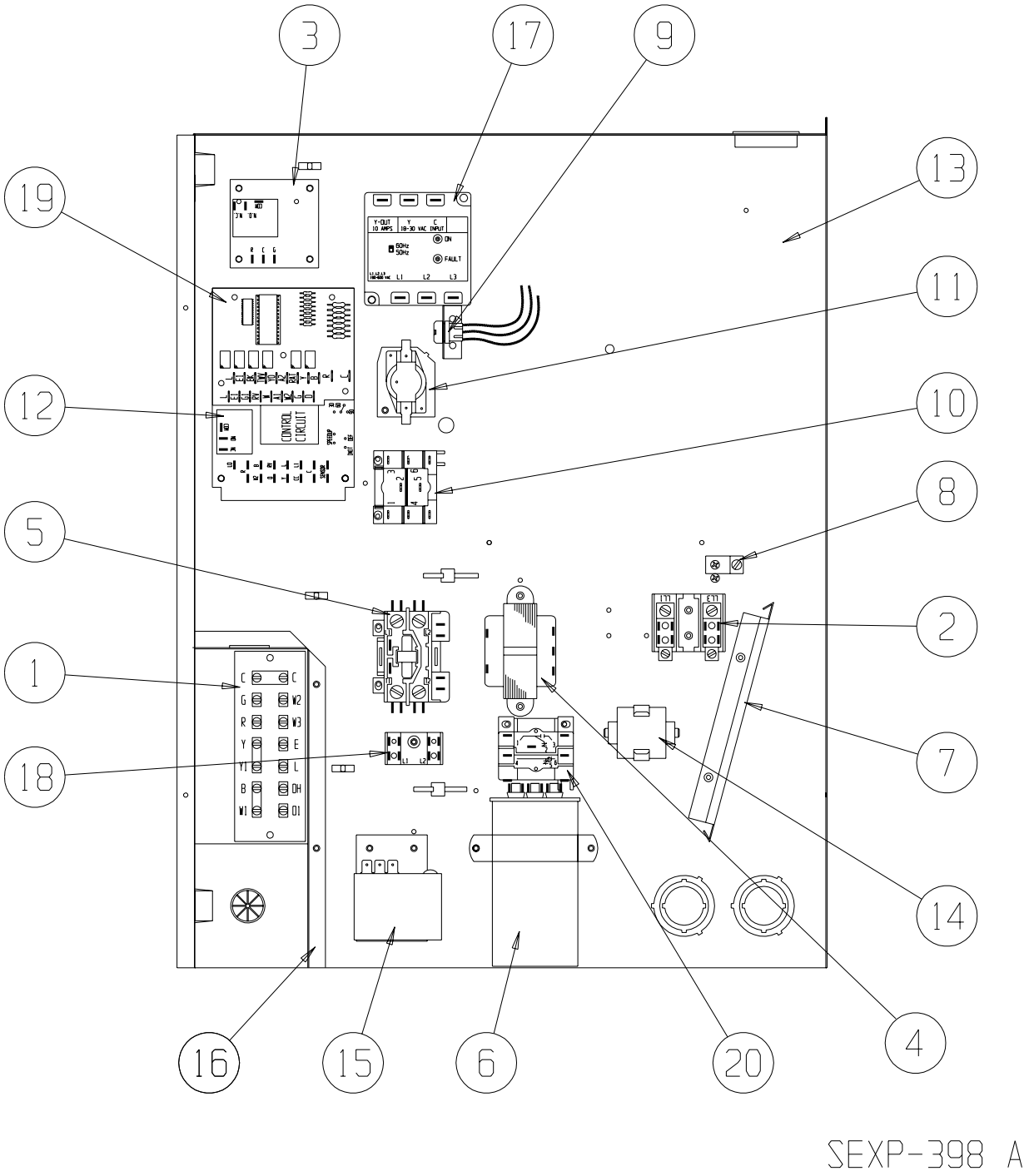

Drawing No.	Part No.	Description	SH381DA	SH381DB	SH381DC	SH431DA	SH431DB	SH431DC	SH491DA	SH491DB	SH491DC
1	8607-019	Low Voltage Terminal Strip	X	X	X	X	X	X	X	X	X
2	8607-013	Terminal Block 2 Pole	X			X			X		
2	8607-014	Terminal Block 3 Pole		X	X		X	X		X	X
2	8607-015	Phenolic Insulator			X			X			X
3	8201-056	Blower Control	X	X		X	X		X	X	
3	8201-032	Blower Relay			X			X			X
4	8407-035	Transformer	X	X		X	X		X	X	
4	8407-042	Transformer			X			X			X
5	8401-027	Compressor Contactor								X	
5	8401-002	Compressor Contactor		X	X		X	X			X
5	8401-016	Compressor Contactor	X			X			X		
6	8552-005	Outdoor Motor Capacitor		X	X		X	X		X	X
6	8552-072	Compressor Capacitor	X								
6	8552-056	Compressor Capacitor							X		
6	8552-059	Compressor Capacitor				X					
7	135-130	Wire Shield	X	X	X	X	X	X	X	X	X
8	8611-006	Ground Terminal	X	X	X	X	X	X	X	X	X
9	3000-1167	6 Pin Connector	X	X	X	X	X	X	X	X	X
10	8201-086	Low Ambient Bypass Relay ①	X	X	X	X	X	X	X	X	X
11	8201-065	Low Pressure Bypass (TDR) ①	X	X	X	X	X	X	X	X	X
12	8201-102	Heat Pump Control Board	X	X	X	X	X	X	X	X	X
13	117X229	Control Panel	X	X	X	X	X	X	X	X	X
14	8551-004	Start Device ①	X			X			X		
15	8408-037	Return Air Thermostat	X	X	X	X	X	X	X	X	X
16	117X139	Low Voltage Box	X	X	X	X	X	X	X	X	X
17	8201-085	Phase Monitor		X	X		X	X		X	X
18	8607-017	Terminal Block ①	X	X	X	X	X	X	X	X	X
19	8201-092	Dehumidification Logic Board	X	X	X	X	X	X	X	X	X
20	8201-032	Outdoor Fan Relay			X			X			X
NS	4096-126	Wiring Diagram				X			X		
NS	4096-229	Wiring Diagram					X				
NS	4096-328	Wiring Diagram						X			
NS	4096-230	Wiring Diagram								X	
NS	4096-329	Wiring Diagram									X
NS	4096-330	Wiring Diagram			X						
NS	4096-128	Wiring Diagram	X								
NS	4096-228	Wiring Diagram		X							
NS	8615-039	Circuit Breaker 45A 2 Pole (0Z)	X								
NS	8615-040	Circuit Breaker 50A 2 Pole (0Z)				X					
NS	8615-041	Circuit Breaker 60A 2 Pole (0Z)							X		
NS	8615-042	Circuit Breaker 35A 3 Pole (0Z)		X			X				
NS	8615-044	Circuit Breaker 45A 3 Pole (0Z)								X	
NS	8615-067	Toggle Disconnect (0Z)			X			X			X

NS – Not Shown
① – Optional

BLOWER ASSEMBLY

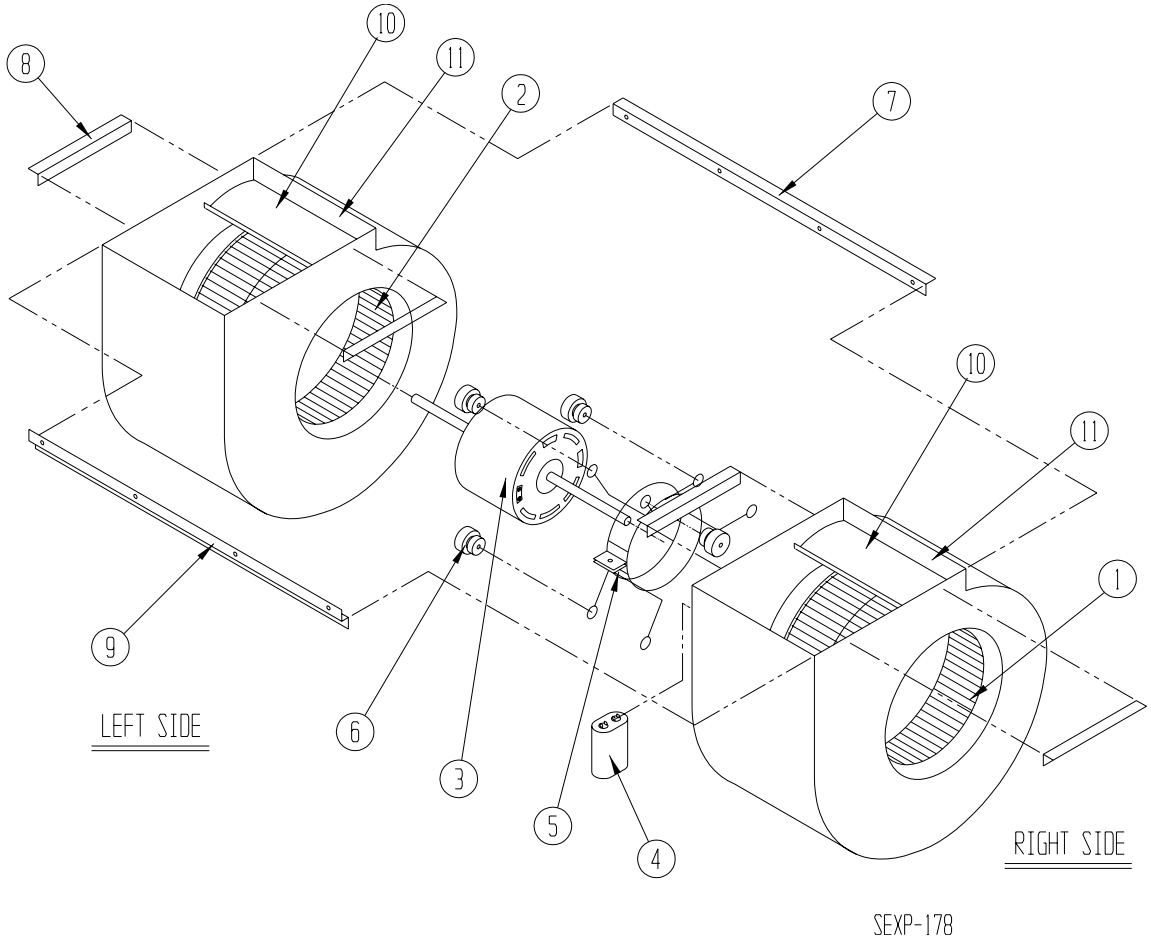

Drawing No.	Part No.	Description	S900-242	S900-243
1	5152-011	10 Inch Wheel (CW)	X	X
2	5152-012	10 Inch Wheel (CCW)	X	X
3	8104-012	Blower Motor (230/208)	X	
3	8104-014	Blower Motor (460)		X
4	8552-005	Capacitor	X	X
5	8200-040	Motor Mount	X	X
6	5451-011	Grommets	6	6
7	105-881	Back Brace	X	X
8	105-880	Side Angle	4	4
9	103-389	Front Brace	X	X
10	151-101	Blower Housing	2	2
11	144-166	Diffuser	2	2