REPLACEMENT PARTS MANUAL

GROUND SOURCE and GROUND WATER SOURCE HEAT PUMP

MODELS: **GV27S1-A**
GV38S1-A
GV51S1-A
GV61S1-A
GV71S1-A

General Notes

- Revised and/or additional pages may be issued from time to time.
- A complete and current manual consists of pages shown in the following contents section.

Important

- Contact the installing and/or local Bard distributor for all parts requirements. Make sure you have the complete model and serial number available from the unit rating plates.

Contents

Description	Page
Cabinet Components	
◆ Exploded View	2
◆ Usage List	3
Functional Components	
◆ Exploded View	4
◆ Usage List	5
Control Panel	
◆ Exploded View	6
◆ Usage List	6

Bard Manufacturing Company, Inc.
Bryan, Ohio 43506

Since 1914...Moving ahead, just as planned.

Manual: 2110-736A
Supersedes: 2110-736
File: Tab 8
Date: 02-17-09

CABINET COMPONENTS

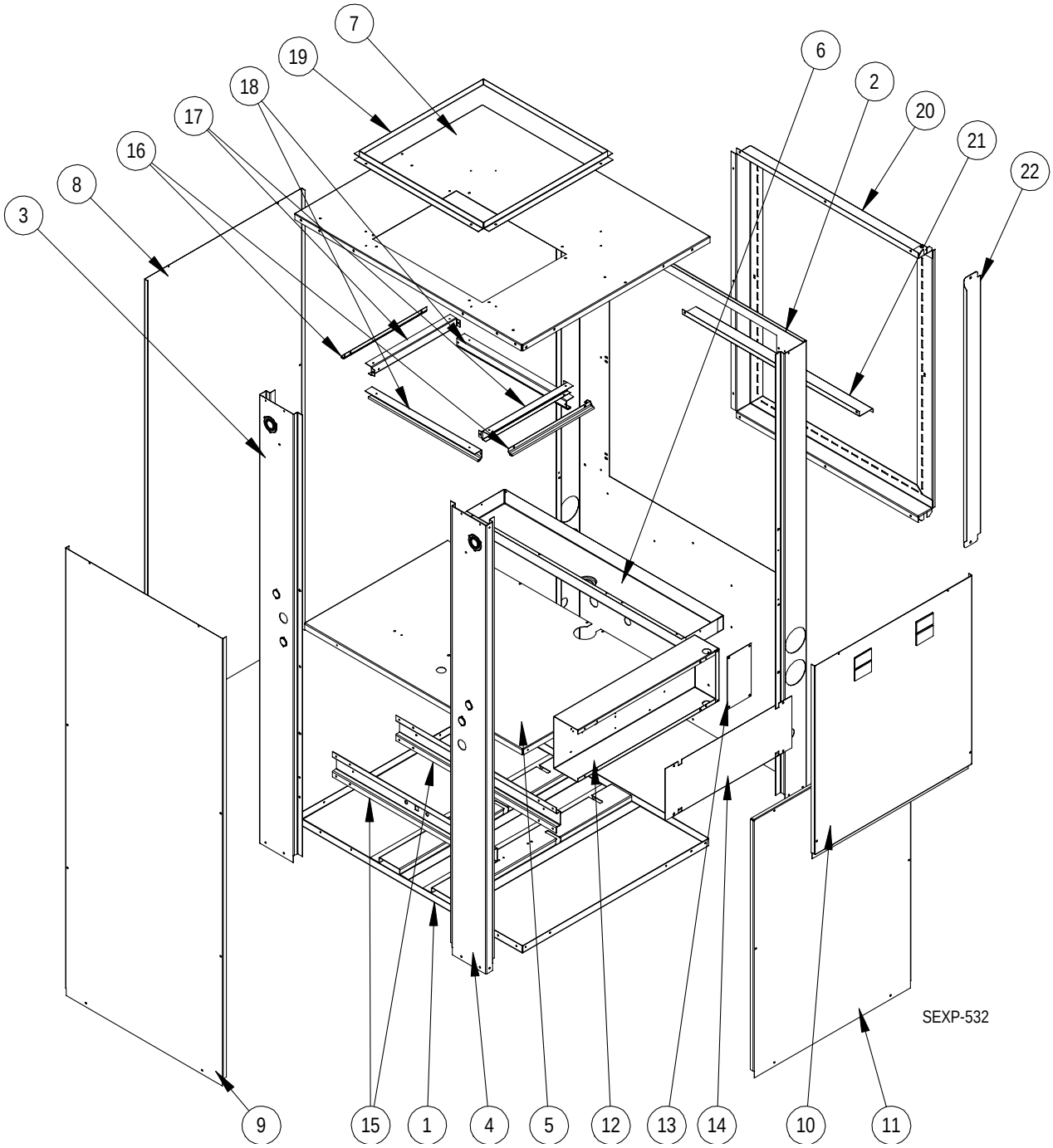

Drawing No.	Part No.	Description	GV27S1	GV38S1	GV51S1	GV61S1	GV71S1
1	S127-296-X	Base Assembly	X	X			
1	S127-335-X	Base Assembly			X	X	X
2	S509-209-4	Back Assembly	X	X			
2	S509-219-4	Back Assembly			X	X	X
3	S549-109-4	Left Corner Assembly	X	X			
3	S549-111-4	Left Corner Assembly			X	X	X
4	S549-108-4	Right Corner Assembly	X	X			
4	S549-110-4	Right Corner Assembly			X	X	X
5	521-433	Partition Assembly	X	X			
5	521-437	Partition Assembly			X	X	X
6	S523-118	Drain Pan Assembly with Fitting	X	X			
6	S523-120	Drain Pan Assembly with Fitting			X	X	X
7	507-217-4	Top Assembly	X	X			
7	507-334-4	Top Assembly			X	X	X
8	553-466-4	Side Assembly	X	X			
8	501-530-4	Side Assembly			X	X	X
9	501-358-4	Side Assembly	X	X			
9	501-530-4	Side Assembly			X	X	X
10	S553-462-4	Upper Door Assembly	X	X			
10	S553-465-4	Upper Door Assembly			X	X	X
11	S553-463-4	Lower Door Assembly	X	X			
11	S553-464-4	Lower Door Assembly			X	X	X
12		Control Panel (See Control Panel Drawing)	X	X	X	X	X
13	136-565	Control Panel Fill	X	X			
13	136-566	Control Panel Fill			X	X	X
14	133-194	Control Panel Door	X	X	X	X	X
15	140-306	Water Coil Support Channel	2	2	2	2	2
16	140-307	Blower Side	2	2	2	2	2
17	140-263	Blower Slide End	2	2			
17	140-305	Blower Slide End			2	2	2
18	144-177	Blower Slide	2	2			
18	145-186	Blower Slide			2	2	2
19	105-1035-4	Plenum Angle Assembly	X	X			
19	105-1161-4	Plenum Angle Assembly			4	4	4
20	131-156-4	Filter Rack Wrapper	X	X			
20	131-158-4	Filter Rack Wrapper			X	X	X
21	165-591-4	Filter Rack Channel			X	X	X
22	S131-157-4	Filter Rack Door	X	X			
22	S131-159-4	Filter Rack Door			X	X	X

FUNCTIONAL COMPONENTS

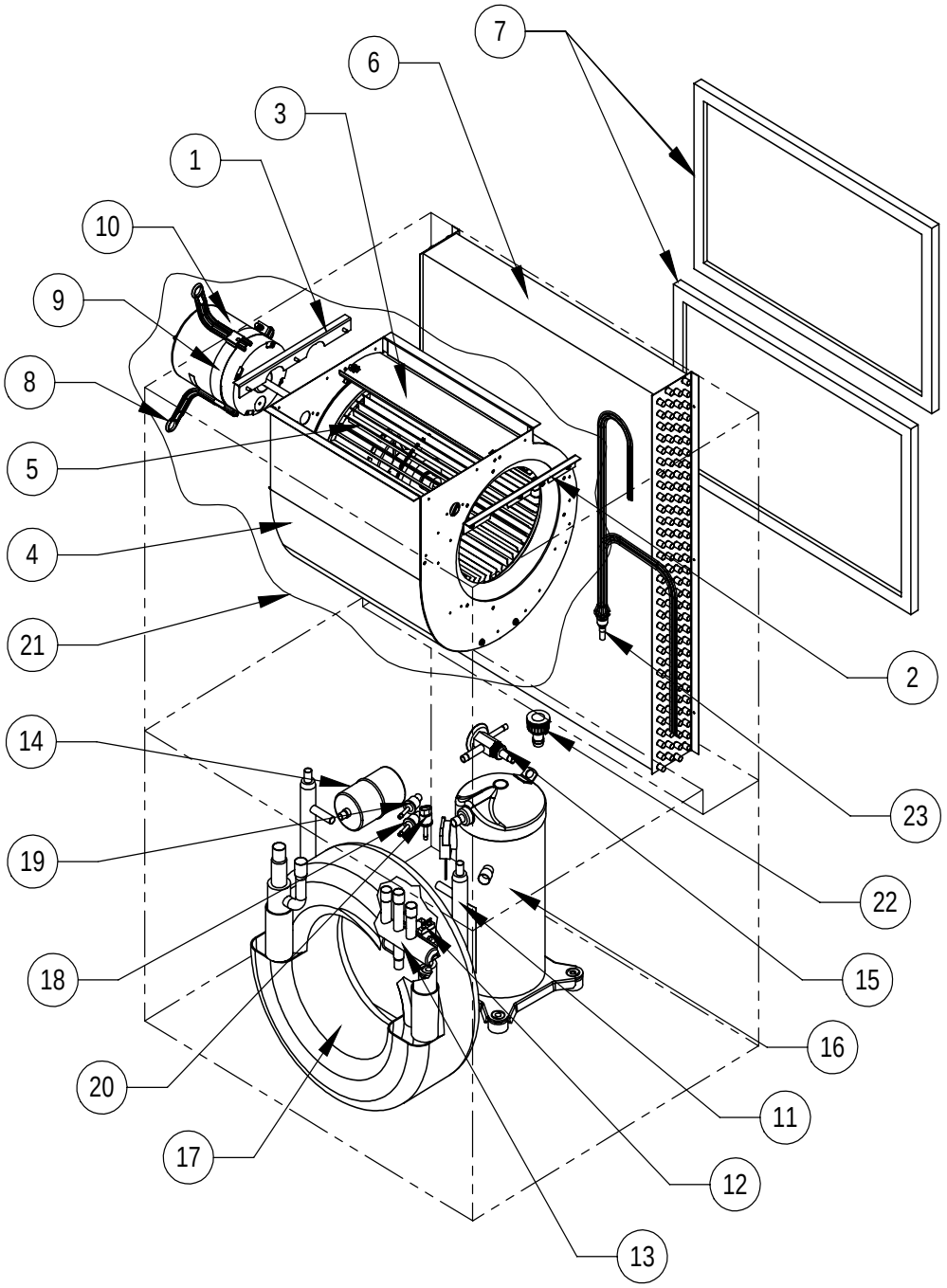

SEXP-533

Drawing No.	Part No.	Description	GV27S1-AC	GV27S1-AN	GV38S1-AC	GV38S1-AN	GV51S1-AC	GV51S1-AN	GV61S1-AC	GV61S1-AN	GV71S1-AC	GV71S1-AN
1	104-1033	Right Blower Angle	X	X	X	X						
1	104-1162	Right Blower Angle					X	X	X	X	X	X
2	104-1034	Left Blower Angle	X	X	X	X						
2	104-1162	Left Blower Angle					X	X	X	X	X	X
3	144-128	Diffuser	X	X	X	X						
3	144-131	Diffuser					X	X	X	X	X	X
4	151-113	Blower Housing	X	X	X	X						
4	151-118	Blower Housing					X	X	X	X	X	X
5	5152-014	Blower Wheel	X	X	X	X						
5	5152-061	Blower Wheel					X	X	X	X	X	X
6	5060-144BX	Evaporator Coil	X	X	X	X						
6	5060-145BX	Evaporator Coil					X	X				
6	5060-146BX	Evaporator Coil							X	X		
6	917-0134BX	Evaporator Coil									X	X
7	7004-040	Filter 20 x 25 x 2 MERV 6	X	X	X	X						
7	7004-025	Filter 16 x 25 x 2 MERV 6					2	2	2	2	2	2
8	8620-034	Motor Mount Kit	X	X	X	X	X	X	X	X	X	X
9	8620-034	Motor Mount Kit	X	X	X	X	X	X	X	X	X	X
10	S8105-056-0054	1/3 HP Programmed Motor with Control	X	X								
10	S8106-045-0055	1/2 HP Programmed Motor with Control			X	X						
10	S8106-045-0056	1/2 HP Programmed Motor with Control					X	X				
10	S8107-013-0057	3/4 HP Programmed Motor with Control							X	X		
10	S8107-013-0058	3/4 HP Programmed Motor with Control									X	X
11	5052-019	Desuperheater Coil	X	X			X	X				
12	5650-042	Reversing Valve Solenoid, Red Casing (Ranco)	X	X	X	X	X	X	X	X	X	X
12	5650-046	Reversing Valve Solenoid, Black Casing (San Hua)	X	X	X	X	X	X	X	X	X	X
13	5650-038	Reversing Valve with 24V Solenoid Coil	X	X								
13	5650-039	Reversing Valve with 24V Solenoid Coil			X	X						
13	5650-040	Reversing Valve with 24V Solenoid Coil					X	X	X	X		
13	5650-041	Reversing Valve with 24V Solenoid Coil									X	X
14	5201-009	Bi-Direct Filter Drier	X	X	X	X						
14	5201-010	Bi-Direct Filter Drier					X	X	X	X	X	X
15	5651-185	Expansion Valve	X	X								
15	5651-186	Expansion Valve			X	X						
15	5651-187	Expansion Valve					X	X				
15	5651-188	Expansion Valve							X	X		
15	5651-189	Expansion Valve									X	X
16	8000-335	Compressor	X	X								
16	8000-269	Compressor			X	X						
16	8000-267	Compressor					X	X				
16	8000-268	Compressor							X	X		
16	8000-336	Compressor									X	X
17	S917-0133	Water Coil Assembly	X	X								
17	S917-0125	Water Coil Assembly			X	X	X	X				
17	S917-0126	Water Coil Assembly							X	X		
17	S917-0127	Water Coil Assembly									X	X
18	1804-0405	Low Pressure Switch (8406-121) Ground Water 60# Cut-Out, Blue Wires	X	X	X	X	X	X	X	X	X	X
19	1804-0404	Low Pressure Switch (8406-120) Ground Loop 45# Cut-Out, Yellow Wires	X	X	X	X	X	X	X	X	X	X
20	1804-0316	High Pressure Switch (8406-111)	X	X	X	X	X	X	X	X	X	X
21	900-295-001	Complete Blower Assembly	X	X								
21	900-296-001	Complete Blower Assembly			X	X						
21	900-297-001	Complete Blower Assembly					X	X				
21	900-298-001	Complete Blower Assembly							X	X		
21	900-298-002	Complete Blower Assembly									X	X
22	6094-011	3/4" Barbed Drain Pan Fitting	X	X	X	X	X	X	X	X	X	X
23	S800-0374	Distributor Assembly	X	X	X	X						
23	S800-0394	Distributor Assembly					X	X				
23	S800-0390	Distributor Assembly							X	X		
23	S800-0391	Distributor Assembly									X	X
NS	3000-1222	Compressor Staging Solenoid	X	X	X	X	X	X	X	X	X	X
NS	3000-1223	Compressor Power Plug	X	X	X	X	X	X	X	X	X	X
NS	6094-014	Double O-Ring	X	X	X	X	X	X	X	X	X	X
NS	6094-015	Retaining Cap for Plug Seal	X	X	X	X	X	X	X	X	X	X

CONTROL PANEL

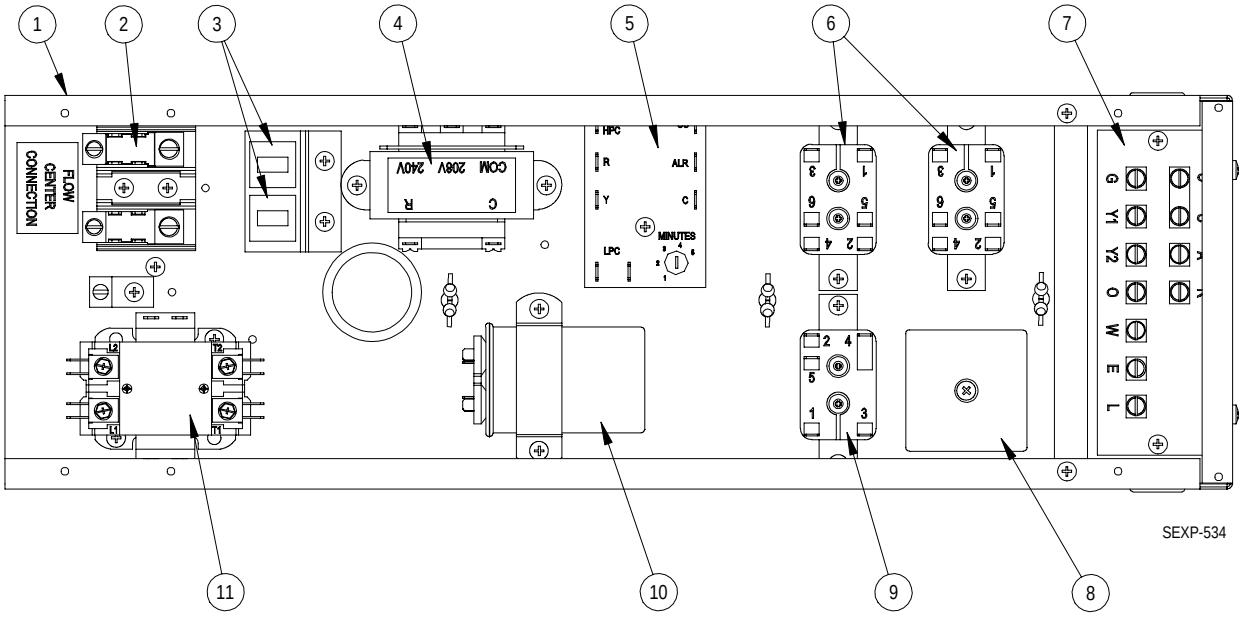

Drawing No.	Part No.	Description	GV27S1	GV38S1	GV51S1	GV61S1	GV71S1
1	517-280	Control Panel (Sheet Metal)	X	X	X	X	X
2	8607-013	Terminal Block	X	X	X	X	X
3	8614-036	Mini Circuit Breaker 3-Amp	2	2	2	2	2
4	8407-034	40VA Transformer 240/208 x 24V	X	X	X	X	X
5	8201-088	Compressor Control Module	X	X	X	X	X
6	8201-015	Relay 1PNO, 1PNC 3A 24V Coil	2	2	2	2	2
7	8607-029	24V Terminal Strip	X	X	X	X	X
8	8201-043	Time Delay Relay, 5-minute DOM	X	X	X	X	X
9	8201-062	Relay SPST, 3A 24V Coil	X	X	X	X	X
10	8552-086	Capacitor 35MFD 370V	X				
10	8552-035	Capacitor 40MFD 370V		X			
10	8552-087	Capacitor 45MFD 370V			X		
10	8552-088	Capacitor 80MFD 370V				X	X
11	8401-006	Contactor 2-Pole 20 Amp	X	X			
11	8401-025	Contactor 2-Pole 40 Amp			X	X	X