# REPLACEMENT PARTS MANUAL

# GROUND SOURCE and GROUND WATER SOURCE HEAT PUMP

**MODELS:** **GV27S1-A**
**GV38S1-A**
**GV51S1-A**
**GV61S1-A**
**GV71S1-A**

## General Notes

- Revised and/or additional pages may be issued from time to time.
- A complete and current manual consists of pages shown in the following contents section.

## Important

- Contact the installing and/or local Bard distributor for all parts requirements. Make sure you have the complete model and serial number available from the unit rating plates.

## Contents


| Description | Page |
|---|---|
| Cabinet Components | |
| ◆ Exploded View | 2 |
| ◆ Usage List | 3 |
| Functional Components | |
| ◆ Exploded View | 4 |
| ◆ Usage List | 5 |
| Control Panel | |
| ◆ Exploded View | 6 |
| ◆ Usage List | 6 |



Bard Manufacturing Company, Inc.
Bryan, Ohio 43506

*Since 1914...Moving ahead, just as planned.*

Climate Control Solutions

Manual: 2110-736G
Supersedes: 2110-736F
File: Tab 8
Date: 06-22-11

# CABINET COMPONENTS

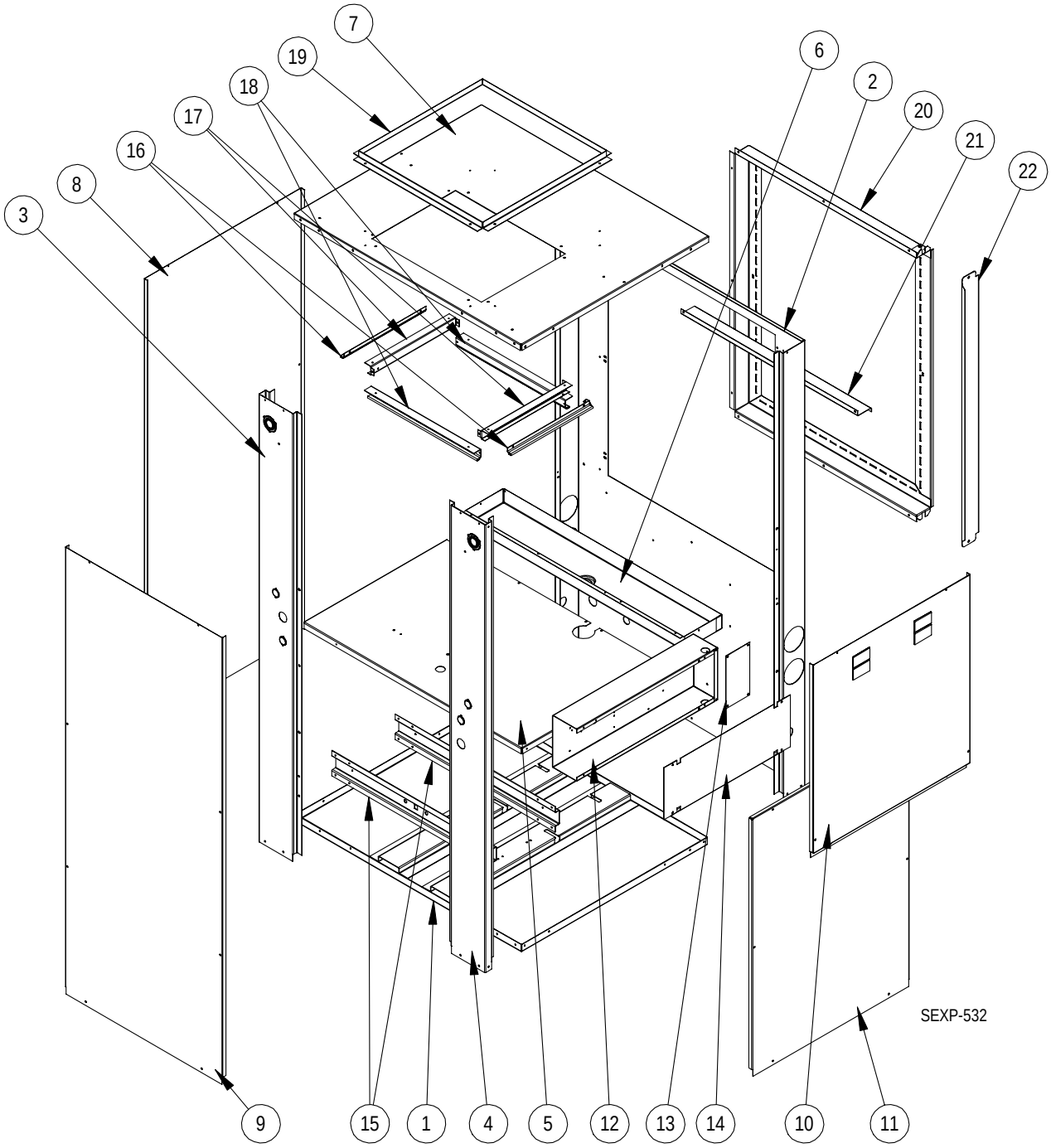

| Drawing No. | Part No. | Description | GV27S1 | GV38S1 | GV51S1 | GV61S1 | GV71S1 |
|---|---|---|---|---|---|---|---|
| 1 | S127-296-X | Base Assembly | X | X | | | |
| 1 | S127-335-X | Base Assembly | | | X | X | X |
| 2 | S509-209-4 | Back Assembly | X | X | | | |
| 2 | S509-219-4 | Back Assembly | | | X | X | X |
| 3 | S549-109-4 | Left Corner Assembly | X | X | | | |
| 3 | S549-111-4 | Left Corner Assembly | | | X | X | X |
| 4 | S549-108-4 | Right Corner Assembly | X | X | | | |
| 4 | S549-110-4 | Right Corner Assembly | | | X | X | X |
| 5 | 521-433 | Partition Assembly | X | X | | | |
| 5 | 521-437 | Partition Assembly | | | X | X | X |
| 6 | S523-118 | Drain Pan Assembly with Fitting | X | X | | | |
| 6 | S523-120 | Drain Pan Assembly with Fitting | | | X | X | X |
| 7 | 507-217-4 | Top Assembly | X | X | | | |
| 7 | 507-334-4 | Top Assembly | | | X | X | X |
| 8 | 553-466-4 | Side Assembly | X | X | | | |
| 8 | 501-530-4 | Side Assembly | | | X | X | X |
| 9 | 501-358-4 | Side Assembly | X | X | | | |
| 9 | 501-530-4 | Side Assembly | | | X | X | X |
| 10 | S553-462-4 | Upper Door Assembly | X | X | | | |
| 10 | S553-465-4 | Upper Door Assembly | | | X | X | X |
| 11 | S553-463-4 | Lower Door Assembly | X | X | | | |
| 11 | S553-464-4 | Lower Door Assembly | | | X | X | X |
| 12 | | Control Panel (See Control Panel Drawing) | X | X | X | X | X |
| 13 | 136-565 | Control Panel Fill | X | X | | | |
| 13 | 136-566 | Control Panel Fill | | | X | X | X |
| 14 | 133-194 | Control Panel Door | X | X | X | X | X |
| 15 | 140-306 | Water Coil Support Channel | 2 | 2 | 2 | 2 | 2 |
| 16 | 140-307 | Blower Side | 2 | 2 | 2 | 2 | 2 |
| 17 | 140-263 | Blower Slide End | 2 | 2 | | | |
| 17 | 140-305 | Blower Slide End | | | 2 | 2 | 2 |
| 18 | 144-177 | Blower Slide | 2 | 2 | | | |
| 18 | 145-186 | Blower Slide | | | 2 | 2 | 2 |
| 19 | 105-1035-4 | Plenum Angle Assembly | X | X | | | |
| 19 | 105-1161-4 | Plenum Angle Assembly | | | 4 | 4 | 4 |
| 20 | 131-156-4 | Filter Rack Wrapper | X | X | | | |
| 20 | 131-158-4 | Filter Rack Wrapper | | | X | X | X |
| 21 | 165-591-4 | Filter Rack Channel | | | X | X | X |
| 22 | S131-157-4 | Filter Rack Door | X | X | | | |
| 22 | S131-159-4 | Filter Rack Door | | | X | X | X |

# FUNCTIONAL COMPONENTS

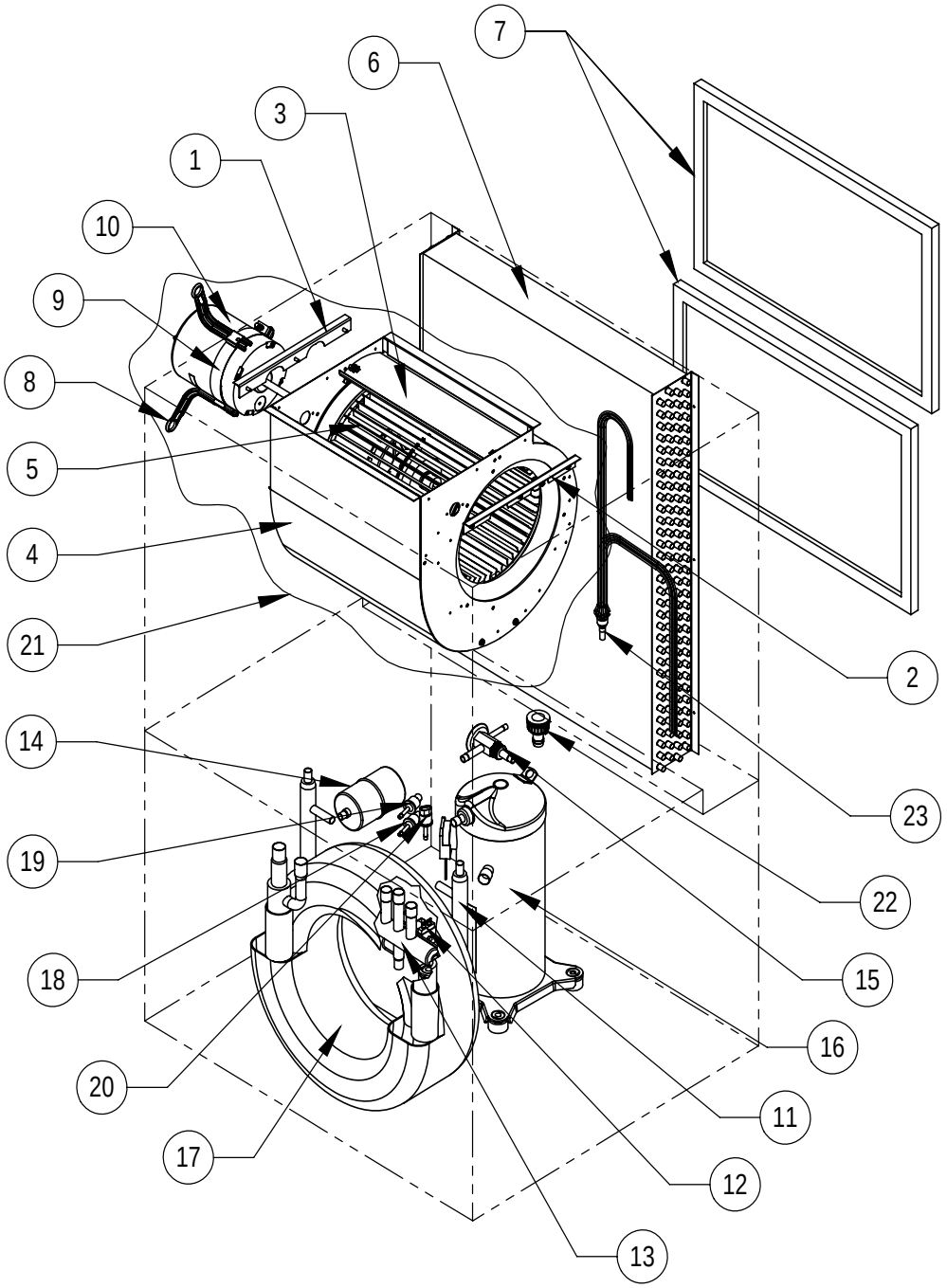


SEXP-533

| Drawing No. | Part No. | Description | GV27S1-AC | GV27S1-AN | GV38S1-AC | GV38S1-AN | GV51S1-AC | GV51S1-AN | GV61S1-AC | GV61S1-AN | GV71S1-AC | GV71S1-AN |
|---|---|---|---|---|---|---|---|---|---|---|---|---|
| 1 | 104-1033 | Right Blower Angle | X | X | X | X | | | | | | |
| 1 | 104-1162 | Right Blower Angle | | | | | X | X | X | X | X | X |
| 2 | 104-1034 | Left Blower Angle | X | X | X | X | | | | | | |
| 2 | 104-1162 | Left Blower Angle | | | | | X | X | X | X | X | X |
| 3 | 144-128 | Diffuser | X | X | X | X | | | | | | |
| 3 | 144-131 | Diffuser | | | | | X | X | X | X | X | X |
| 4 | 151-113 | Blower Housing | X | X | X | X | | | | | | |
| 4 | 151-118 | Blower Housing | | | | | X | X | X | X | X | X |
| 5 | 5152-014 | Blower Wheel | X | X | X | X | | | | | | |
| 5 | 5152-061 | Blower Wheel | | | | | X | X | X | X | X | X |
| 6 | 5060-144BX | Evaporator Coil | X | X | X | X | | | | | | |
| 6 | 5060-145BX | Evaporator Coil | | | | | X | X | | | | |
| 6 | 5060-146BX | Evaporator Coil | | | | | | | X | X | | |
| 6 | 917-0134BX | Evaporator Coil | | | | | | | | | X | X |
| 7 | 7004-040 | Filter 20 x 25 x 2 MERV 6 | X | X | X | X | | | | | | |
| 7 | 7004-025 | Filter 16 x 25 x 2 MERV 6 | | | | | 2 | 2 | 2 | 2 | 2 | 2 |
| 8 | 8620-034 | Motor Mount Kit | X | X | X | X | X | X | X | X | X | X |
| 9 | 8620-034 | Motor Mount Kit | X | X | X | X | X | X | X | X | X | X |
| 10 | S8105-056-0054 | 1/3 HP Programmed Motor with Control | X | X | | | | | | | | |
| 10 | S8106-045-0055 | 1/2 HP Programmed Motor with Control | | | X | X | | | | | | |
| 10 | S8106-045-0056 | 1/2 HP Programmed Motor with Control | | | | | X | X | | | | |
| 10 | S8107-013-0057 | 3/4 HP Programmed Motor with Control | | | | | | | X | X | | |
| 10 | S8107-013-0058 | 3/4 HP Programmed Motor with Control | | | | | | | | | X | X |
| 11 | 5052-019 | Desuperheater Coil | X | X | X | X | X | X | X | X | X | X |
| 12 | 5650-042 | Reversing Valve Solenoid, Red Casing (Ranco) | X | X | X | X | X | X | X | X | X | X |
| 12 | 5650-046 | Reversing Valve Solenoid, Black Casing (San Hua) | X | X | X | X | X | X | X | X | X | X |
| 13 | 5650-038 | Reversing Valve with 24V Solenoid Coil | X | X | | | | | | | | |
| 13 | 5650-039 | Reversing Valve with 24V Solenoid Coil | | | X | X | | | | | | |
| 13 | 5650-040 | Reversing Valve with 24V Solenoid Coil | | | | | X | X | X | X | | |
| 13 | 5650-041 | Reversing Valve with 24V Solenoid Coil | | | | | | | | | X | X |
| 14 | 5201-009 | Bi-Direct Filter Drier | X | X | X | X | | | | | | |
| 14 | 5201-010 | Bi-Direct Filter Drier | | | | | X | X | X | X | X | X |
| 15 | 5651-192 | Expansion Valve | X | X | | | | | | | | |
| 15 | 5651-186 | Expansion Valve | | | X | X | | | | | | |
| 15 | 5651-187 | Expansion Valve | | | | | X | X | | | | |
| 15 | 5651-188 | Expansion Valve | | | | | | | X | X | | |
| 15 | 5651-189 | Expansion Valve | | | | | | | | | X | X |
| 16 | 8000-335 | Compressor | X | X | | | | | | | | |
| 16 | 8000-269 | Compressor | | | X | X | | | | | | |
| 16 | 8000-267 | Compressor | | | | | X | X | | | | |
| 16 | 8000-268 | Compressor | | | | | | | X | X | | |
| 16 | 8000-336 | Compressor | | | | | | | | | X | X |
| 17 | S917-0133 | Water Coil Assembly | X | | | | | | | | | |
| 17 | S917-0138 | Water Coil Assembly | | X | | | | | | | | |
| 17 | S917-0125 | Water Coil Assembly | | | X | | X | | | | | |
| 17 | S917-0139 | Water Coil Assembly | | | | X | | X | | | | |
| 17 | S917-0074 | Water Coil Assembly | | | | | | | X | | | |
| 17 | S917-0064 | Water Coil Assembly | | | | | | | | X | | |
| 17 | S917-0127 | Water Coil Assembly | | | | | | | | | X | |
| 17 | S917-0141 | Water Coil Assembly | | | | | | | | | | X |
| 18 | 1804-0405 | Low Pressure Switch (8406-121)<br>Ground Water 60# Cut-Out, Blue Wires | X | X | X | X | X | X | X | X | X | X |
| 19 | 1804-0404 | Low Pressure Switch (8406-120)<br>Ground Loop 45# Cut-Out, Yellow Wires | X | X | X | X | X | X | X | X | X | X |
| 20 | 1804-0316 | High Pressure Switch (8406-111) | X | X | X | X | X | X | X | X | X | X |
| 21 | 900-295-001 | Complete Blower Assembly | X | X | | | | | | | | |
| 21 | 900-296-001 | Complete Blower Assembly | | | X | X | | | | | | |
| 21 | 900-297-001 | Complete Blower Assembly | | | | | X | X | | | | |
| 21 | 900-298-001 | Complete Blower Assembly | | | | | | | X | X | | |
| 21 | 900-298-002 | Complete Blower Assembly | | | | | | | | | X | X |
| 22 | 6094-011 | 3/4" Barbed Drain Pan Fitting | X | X | X | X | X | X | X | X | X | X |
| 23 | S800-0374 | Distributor Assembly | X | X | X | X | | | | | | |
| 23 | S800-0394 | Distributor Assembly | | | | | X | X | | | | |
| 23 | S800-0390 | Distributor Assembly | | | | | | | X | X | | |
| 23 | S800-0391 | Distributor Assembly | | | | | | | | | X | X |
| NS | 3000-1222 | Compressor Staging Solenoid Plug | X | X | X | X | X | X | X | X | X | X |
| NS | 3000-1223 | Compressor Power Plug | X | X | X | X | X | X | X | X | X | X |
| NS | 6094-014 | Double O-Ring | X | X | X | X | X | X | X | X | X | X |
| NS | 6094-015 | Retaining Cap for Plug Seal | X | X | X | X | X | X | X | X | X | X |

# CONTROL PANEL

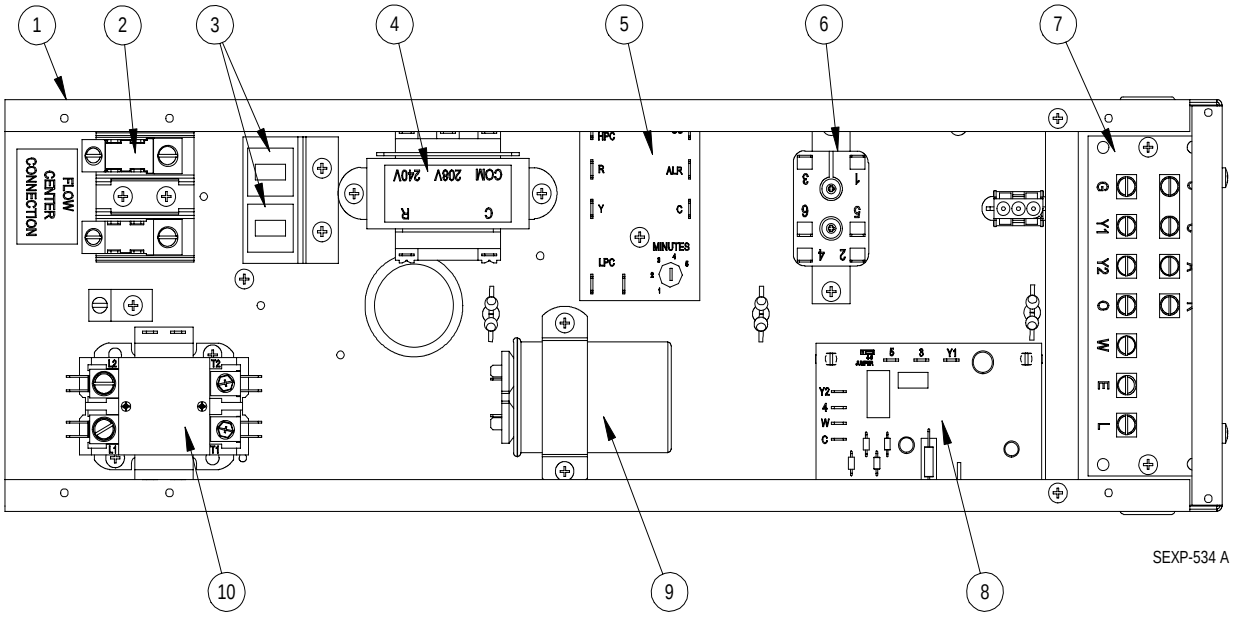


| Drawing No. | Part No. | Description | GV27S1 | GV38S1 | GV51S1 | GV61S1 | GV71S1 |
|---|---|---|---|---|---|---|---|
| 1 | 517-288 | Control Panel (Sheet Metal) | X | X | X | X | X |
| 2 | 8607-013 | Terminal Block | X | X | X | X | X |
| 3 | 8614-036 | Mini Circuit Breaker 3-Amp | 2 | 2 | 2 | 2 | 2 |
| 4 | 8407-034 | 40VA Transformer 240/208 x 24V | X | X | X | X | X |
| 5 | 8201-088 | Compressor Control Module | X | X | X | X | X |
| 6 | 8201-015 | Relay 1PNO, 1PNC 3A 24V Coil | 2 | 2 | 2 | 2 | 2 |
| 7 | 8607-029 | 24V Terminal Strip | X | X | X | X | X |
| 8 | 8201-118 | Blower Control | X | X | X | X | X |
| 9 | 8552-086 | Capacitor 35MFD 370V | X | | | | |
| 9 | 8552-035 | Capacitor 40MFD 370V | | X | | | |
| 9 | 8552-087 | Capacitor 45MFD 370V | | | X | | |
| 9 | 8552-088 | Capacitor 80MFD 370V | | | | X | X |
| 10 | 8401-033 | Contactor 2-Pole 20 Amp with Lugs | X | X | | | |
| 10 | 8401-034 | Contactor 2-Pole 40 Amp with Lugs | | | X | X | X |