WATER SOURCE HEAT PUMPS

MODELS:

REPLACEMENT PARTS MANUAL

GTB1-A	Blower Section
GTA3600UD1-A	Coil Section
GTA4860UD1-A	Coil Section
GTC36S1-ADCX	Compressor Section
GTC48S1-ADCX	Compressor Section
GTC60S1-ADCX	Compressor Section
GTC36S1-ADNX	Compressor Section
GTC48S1-ADNX	Compressor Section
GTC60S1-ADNX	Compressor Section

General Notes

- Revised and/or additional pages may be issued from time to time.
- A complete and current manual consists of pages shown in the following contents section.

Important

- Contact the installing and/or local distributor for all parts requirements. Make sure you have the complete model and serial number available from the unit rating plates.

Contents

Description — Page

Blower Section
- Exploded View 2
- Usage List 3
- Exploded View 4
- Usage List 5

"A" Coil Section
- Exploded View 6
- Usage List 7

Compressor Section
- Exploded View 8
- Usage List 9
- Exploded View 10
- Usage List 11

PATENT PENDING

BMC, Inc.
Bryan, Ohio 43506

Manual: 2110-737A
Supersedes: 2110-737
File: Volume I, Tab 8
Date: 06-23-10

BLOWER SECTION

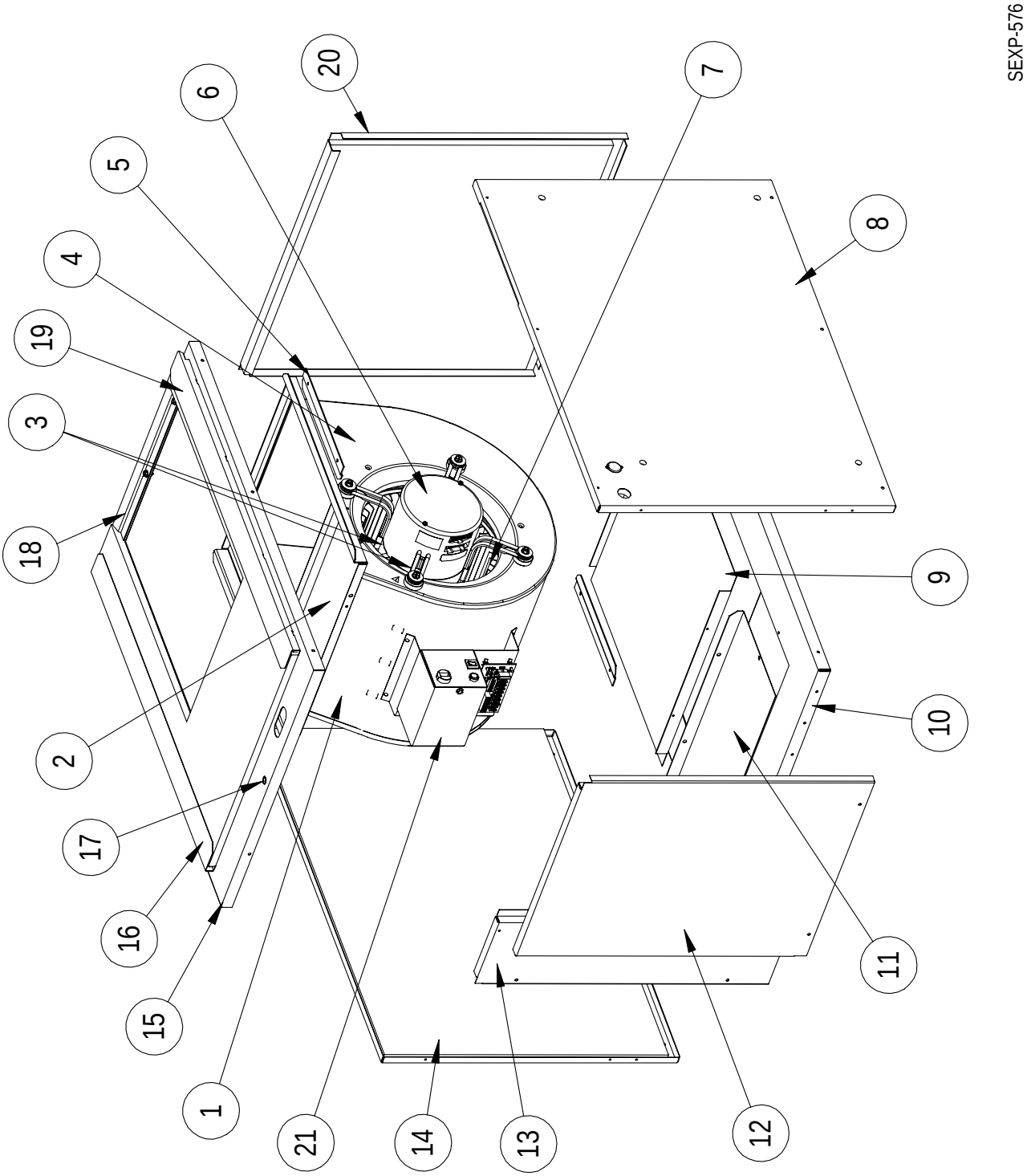

DRAWING NO.	PART NO.	DESCRIPTION	GTB1-A
1	900-306	Complete Blower Assembly	X
2	141-351	Blower Mounting Plate	X
3	8620-216	Motor Mount Band and Arms Kit	X
4	151-122	Blower Housing	X
5	103-477	Blower Offset	4
6 6	S8107-009-0074 C8107-009-0074	3/4 HP Programmed Motor with Control Motor Control Module Only	X X
7	5152-049	Blower Wheel	X
8	501-595-1	Right Side	X
9	136-601	Rear Blower Base Fill Plate	X
10	S127-389	Base	X
11	136-600	Front Blower Base Fill Plate	X
12	S553-480-1	Front Door	X
13	515-184-1	Front Corner	X
14	501-594-1	Left Side	X
15	S107-285-1	Top	X
16	141Y349	Left Blower Top Rail	X
17	1012-222	1/4-20 Hex Threaded Insert	X
18	103-478	Rear Securing Offset	X
19	141X349	Right Blower Top Rail	X
20	509-244-1	Back	X
21		See Control Panel Drawing	X

BLOWER SECTION

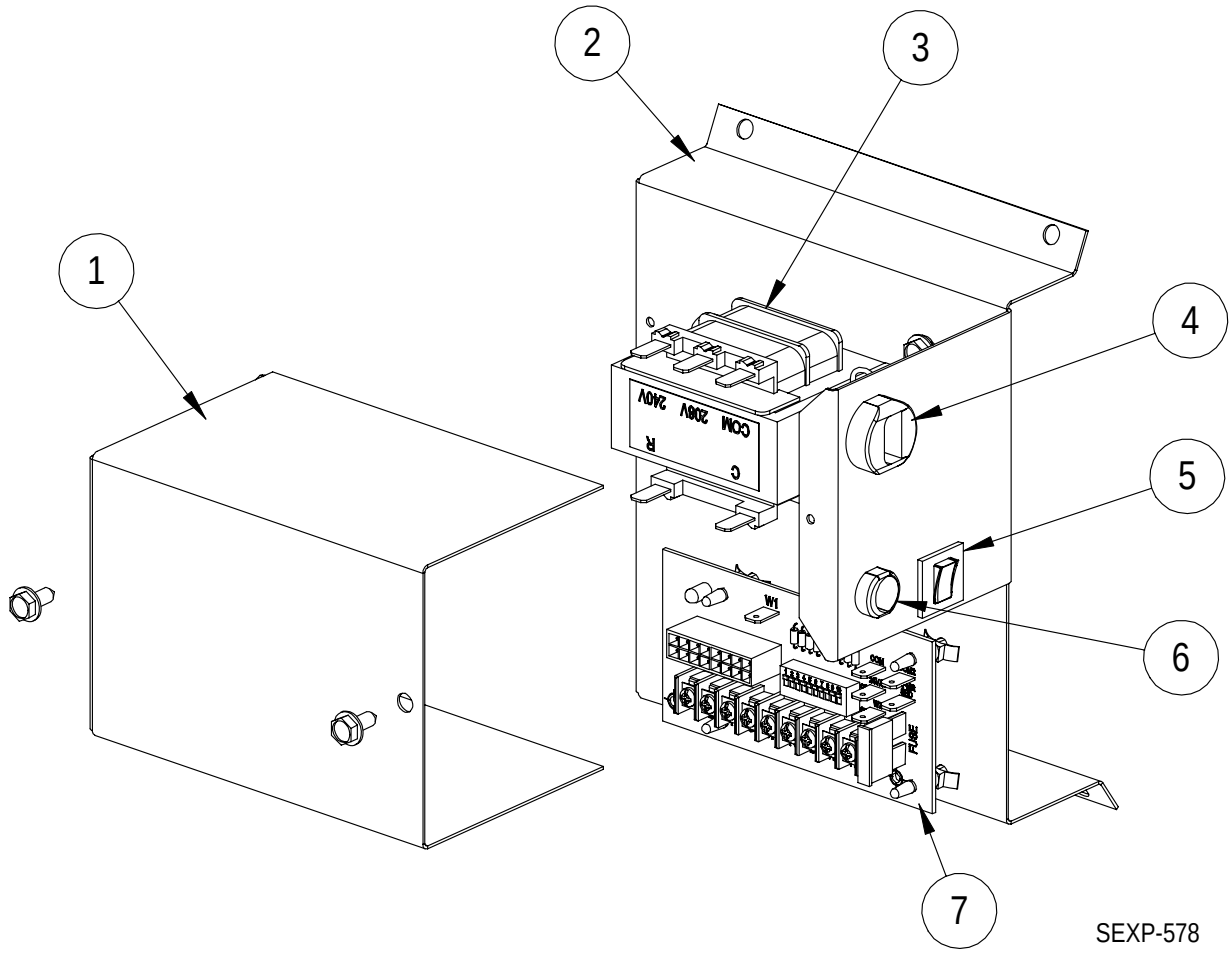

DRAWING NO.	PART NO.	DESCRIPTION	GTB1-A
1	S143-143	Lower Control Panel Cover	X
2	117-297	Lower Control Panel	X
3	8407-035	50VA Transformer	X
4	8611-019	Strain Relief	X
5	8614-036	3 Amp Circuit Breaker	X
6	8611-020	Strain Relief	X
7	8201-121	Electronic Control Module	X
NS	3000-1350	Power Harness	X
NS	3000-1351	ECM Control Harness	X

"A" COIL SECTION

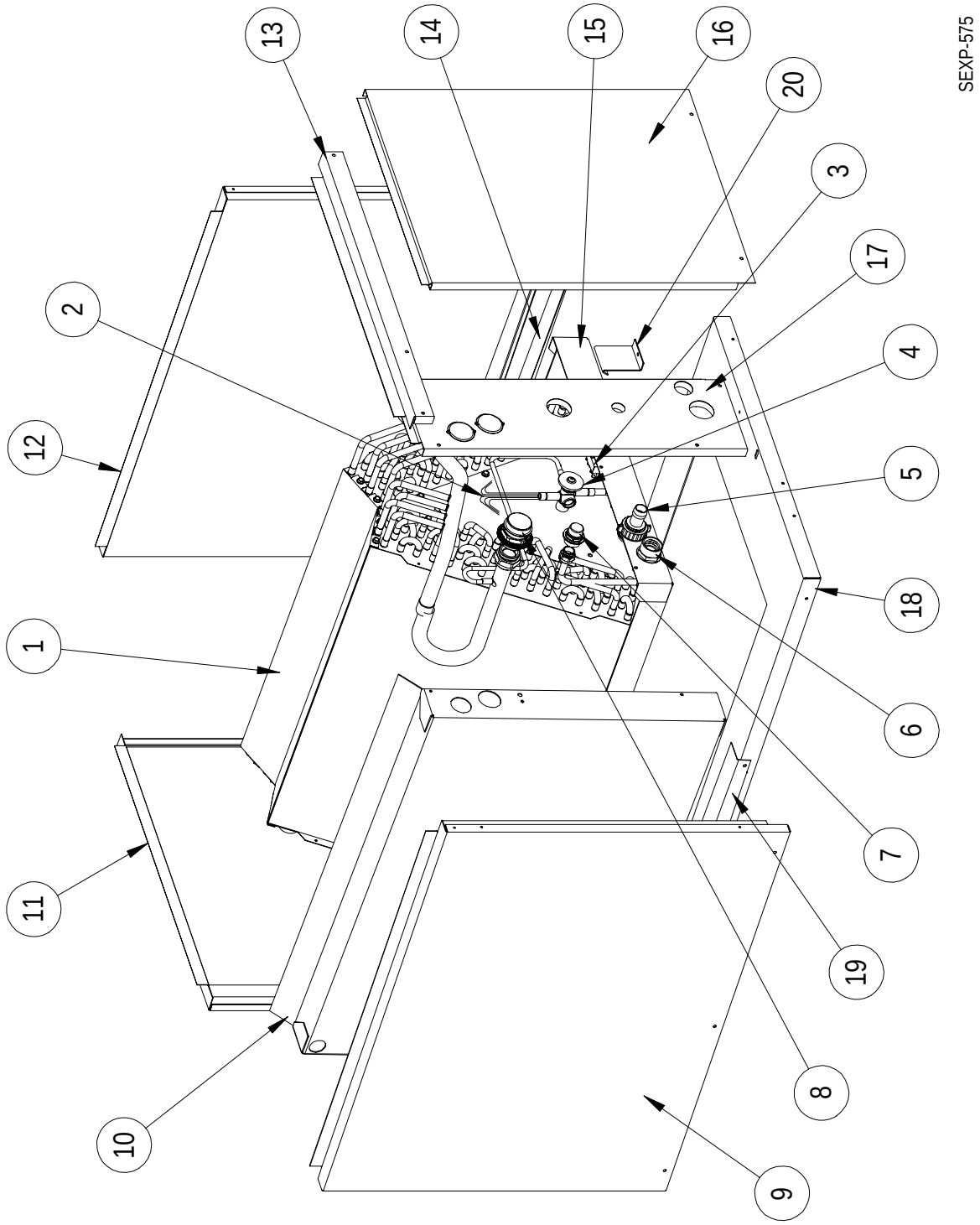

DRAWING NO.	PART NO.	DESCRIPTION	GTA3600UD1-A	GTA4860UD1-A
1	S917-0164	Coil Assembly	X	
1	S917-0165	Coil Assembly		X
2	800-0406	Cooling Distributor	X	X
3	8607-017	Terminal Block	X	X
4	5651-210	Expansion Valve	X	
4	5651-212	Expansion Valve		X
5	6094-011	3/4" Barbed Drain Pan Fitting	X	X
6	6094-003	Secondary Drain Pan Fitting	X	X
7	7000-042	3/8" Male Coupling	X	X
8	7000-044	3/4" Male Coupling	X	X
9	501-592-1	Left Side	X	X
10	123-135	Horizontal Drain Pan (Optional)	X	X
11	509-243-1	Back	X	X
12	S501-593-1	Right Side	X	X
13	515-183-1	Evaporator Front Fill	X	X
14	105X1223	Right Drain Pan Angle	X	X
15	S123-134	Drain Pan	X	X
16	553-476-1	Front Door	X	X
17	515-182-1	Evaporator Access Plate	X	X
18	527-388	Base	X	X
19	105Y1223	Left Drain Pan Angle	X	X
20	141-352	Drain Pan Support Clip	X	X

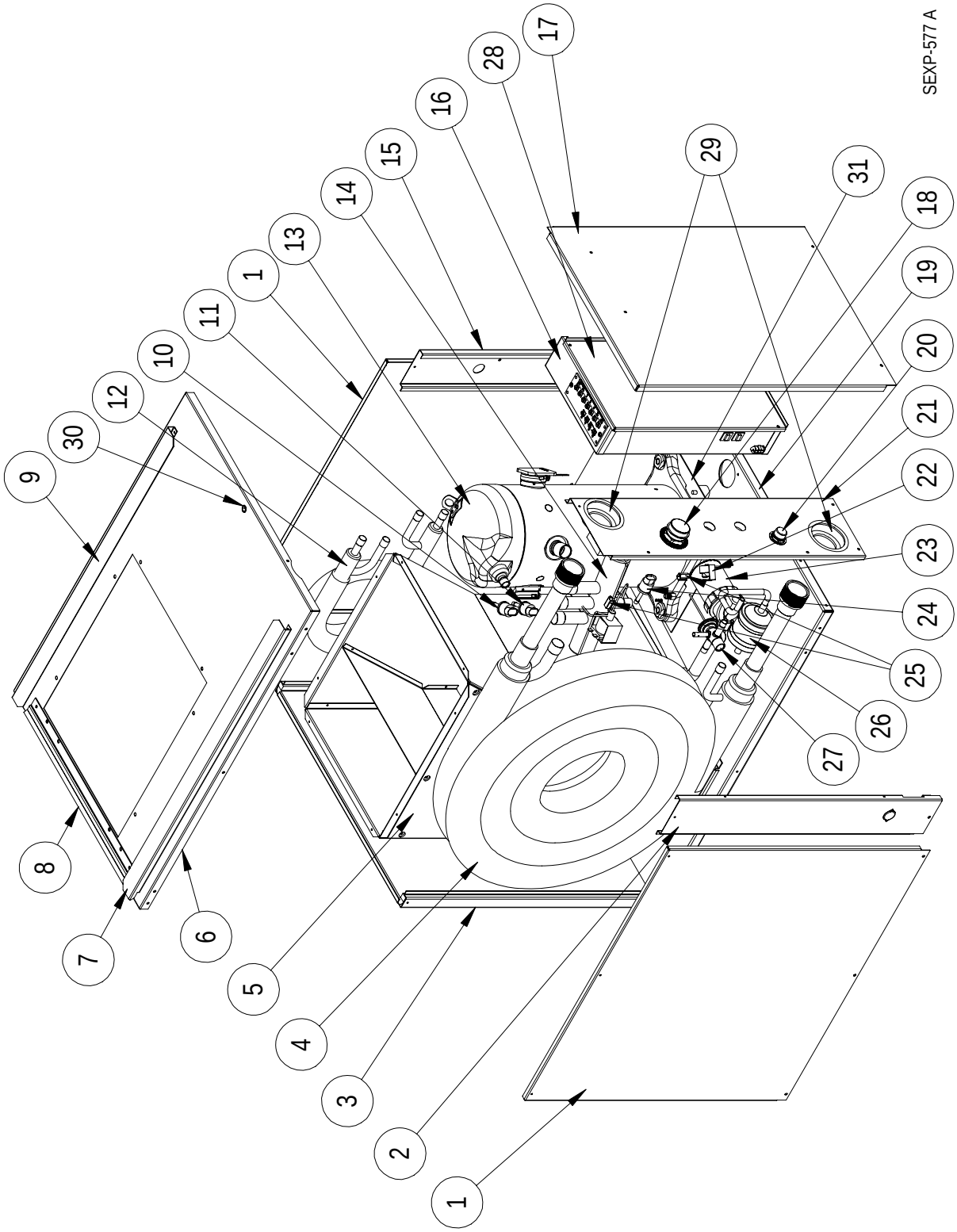
SEXP-577 A
1
2
3
4
5
6
7
8
9
10
11
12
13
14
15
16
17
18
19
20
21
22
23
24
25
26
27
28
29
30
31

DRAWING NO.	PART NO.	DESCRIPTION	GTC36S1-ADCX	GTC48S1-ADCX	GTC60S1-ADCX	GTC36S1-ADNX	GTC48S1-ADNX	GTC60S1-ADNX
1	501-591-1	Side	2	2	2	2	2	2
2	549-113-1	Left Corner	X	X	X	X	X	X
3	509-242-1	Back	X	X	X	X	X	X
4	S917-0167	3-Ton Water Coil Assembly	X					
4	S917-0168	4-Ton Water Coil Assembly		X				
4	S917-0169	5-Ton Water Coil Assembly			X			
4	S917-0175	3-Ton Cupronickel Coil Assembly				X		
4	S917-0176	4-Ton Cupronickel Coil Assembly					X	
4	S917-0177	5-Ton Cupronickel Coil Assembly						X
5	S539-237	Condenser Duct Assembly	X	X	X	X	X	X
6	S107-284-1	Top	X	X	X	X	X	X
7	141Y354	Left Condenser Top Rail	X	X	X	X	X	X
8	103-480	Condenser Hold Down Offset	X	X	X	X	X	X
9	141X354	Right Condenser Top Rail	X	X	X	X	X	X
10	8406-121	Low Pressure Switch	X	X	X	X	X	X
11	8406-120	Low Pressure Switch	X	X	X	X	X	X
12	917-0171	Desuperheater Coil Assembly	X	X	X	X	X	X
13	8000-269	Compressor	X			X		
13	8000-267	Compressor		X			X	
13	8000-268	Compressor			X			X
NS	8001-013	Compressor Grommet	4	4	4	4	4	4
NS	1012-328	5/16-18x1.94 Compressor Bolt	4	4	4	4	4	4
14	5650-039	Reversing Valve with 24V Solenoid Coil	X			X		
14	5650-040	Reversing Valve with 24V Solenoid Coil		X	X		X	X
15	S549-112-1	Right Corner	X	X	X	X	X	X
16		See Control Panel Drawing	X	X	X	X	X	X
17	S553-475-1	Condenser Service Door	X	X	X	X	X	X
18	7000-042	3/4" Male Coupling	X	X	X	X	X	X
19	527-387	Base	X	X	X	X	X	X
20	7000-044	3/8" Male Coupling	X	X	X	X	X	X
21	S515-180-1	Front Panel	X	X	X	X	X	X
22	8402-171	Water Temperature Limit	X	X	X	X	X	X
23	910-1765	Circulating Pump Assembly	X	X	X	X	X	X
24	8406-1[illegible]1	High Pressure Switch	X	X	X	X	X	X
25	8408-040	Inlet Thermistor (Black Wires)	X	X	X	X	X	X
25	8408-043	Outlet Thermistor (Red Wires)	X	X	X	X	X	X
26	5201-020	Filter Drier	X	X	X	X	X	X
27	5651-210	Expansion Valve	X			X		
27	5651-211	Expansion Valve		X			X	
27	5651-212	Expansion Valve			X			X
28	S143-142	Control Panel Cover	X	X	X	X	X	X
29	6094-013	Closeout	2	2	2	2	2	2
30	1012-222	1/4-20 Hex Threaded Insert	X	X	X	X	X	X
31	140-355	Compressor Support Plate	X	X	X	X	X	X
NS	5451-018	Grommet	4	4	4	4	4	4
NS	1012-221	1/4-20 Hex Flange Nut	8	8	8	8	8	8

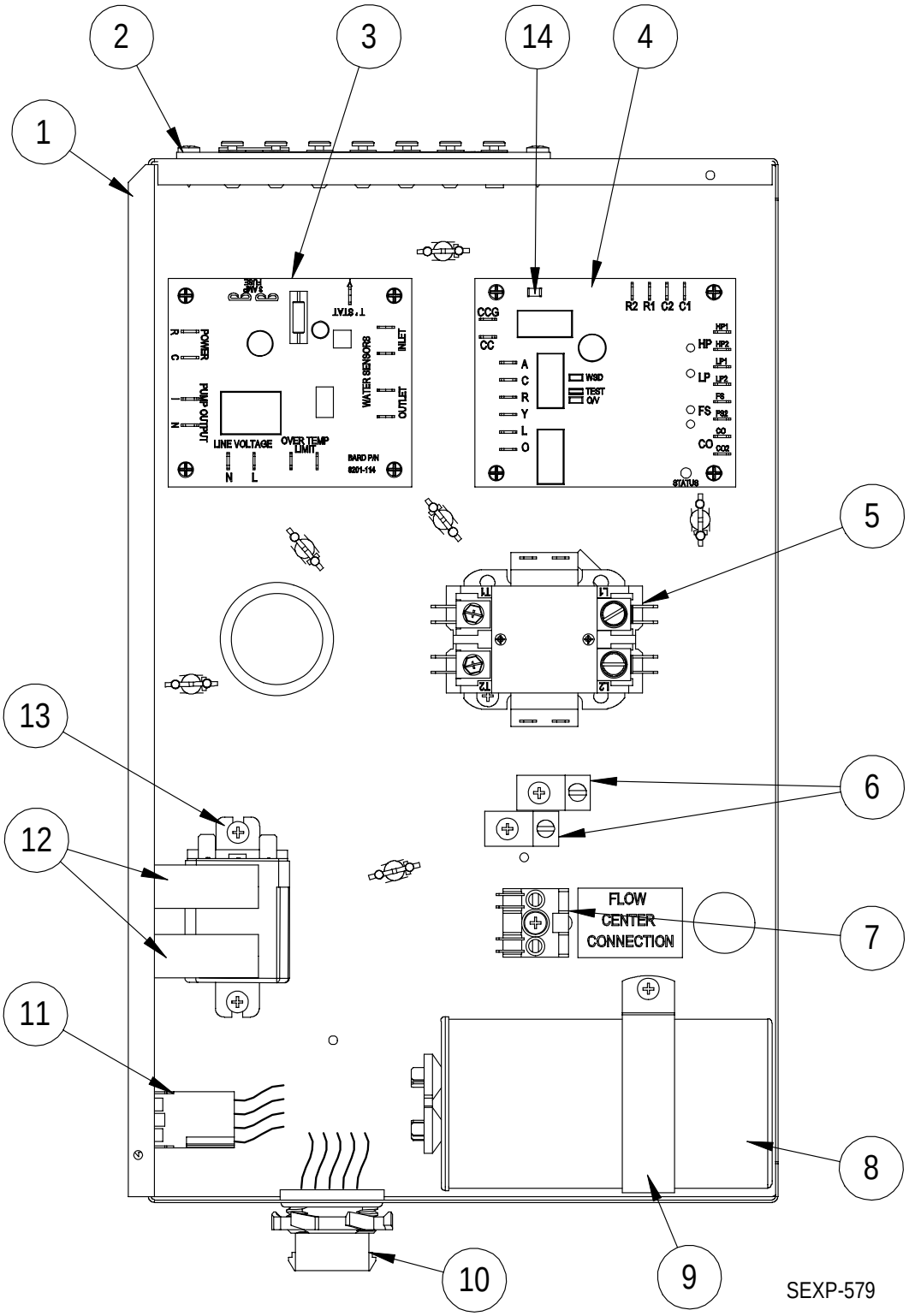
1
2
3
14
4
5
6
7
8
9
10
11
12
13
FLOW
CENTER
CONNECTION
SEXP-579

DRAWING NO.	PART NO.	DESCRIPTION	GTC36S1-ADCX	GTC48S1-ADCX	GTC60S1-ADCX
1	117-296	Control Panel	X	X	X
2	8607-029	Terminal Strip	X	X	X
3	8201-114	Desuperheater Control Board	X	X	X
4	8201-120	Geothermal Logic Control	X	X	X
5	8401-033	2-Pole Contactor 20 Amp	X		
5	8401-034	2-Pole Contactor 40 Amp		X	X
6	8611-006	Terminal	2	2	2
7	8607-030	Screw to Tab Terminal Block	X	X	X
8	8552-035	Capacitor 40MFD 370V	X		
8	8552-087	Capacitor 45MFD 370V		X	
8	8552-088	Capacitor 80MFD 370V			X
9	8550-007	Capacitor Bracket	X	X	X
10	3000-1352	Wire Assembly	X	X	X
11	3000-1353	Wire Assembly	X	X	X
12	8614-036	Mini Circuit Breaker 3 Amp	2	2	2
13	8201-048	Relay	X	X	X
14	8614-052	3.15 Amp Glass Mini Fuse	X	X	X