REPLACEMENT PARTS MANUAL

GROUND SOURCE
AND
GROUND WATER SOURCE
HEAT PUMP

Models:

GV27S3AA GV38S3AA GV51S3AA GV61S3AA GV71S3AA

General Notes

- Revised and/or additional pages may be issued from time to time.
- A complete and current manual consists of pages shown in the following contents section.

Important

- Contact the installing and/or local distributor for all parts requirements. Be sure to have the complete model and serial number available from the unit rating plates.

Contents

Description Page

Cabinet Components
- Exploded View 2
- Usage List 3

Functional Components
- Exploded View 4
- Usage List 5

Control Panel
- Layout View 6
- Usage List 6

BMC, Inc.
Bryan, Ohio 43506

Manual: 2110-741B
Supersedes: 2110-741A
Date: 7-20-17

CABINET COMPONENTS

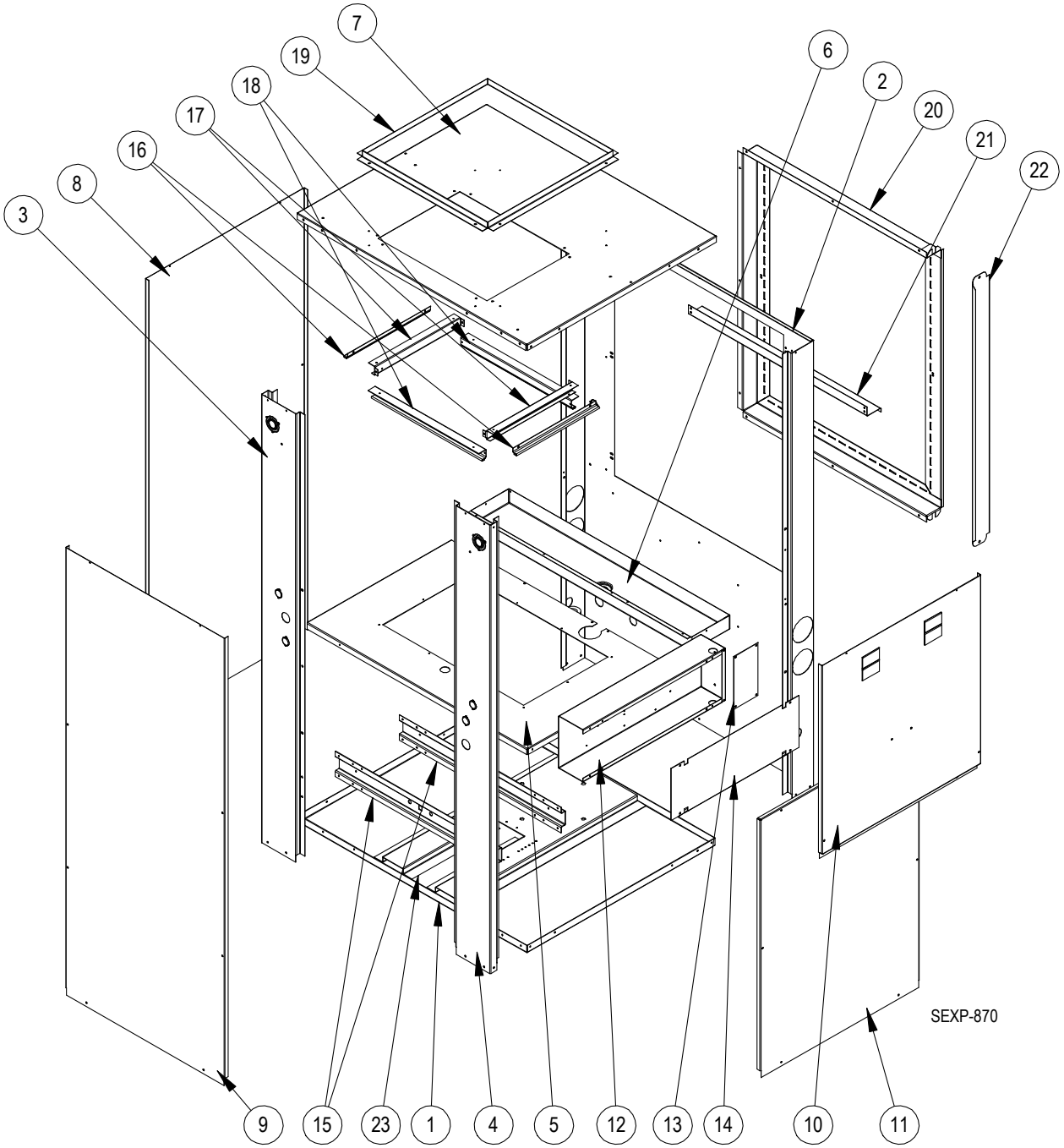

Drawing No.	Part No.	Description	GV27S3	GV38S3	GV51S3	GV61S3	GV71S3
1	S127-562-X	Base Assembly	X	X			
1	S127-525-X	Base Assembly			X	X	X
2	S509-209-4	Back Assembly	X	X			
2	S509-219-4	Back Assembly			X	X	X
3	S549-109-4	Left Corner Assembly	X	X			
3	S549-111-4	Left Corner Assembly			X	X	X
4	S549-108-4	Right Corner Assembly	X	X			
4	S549-110-4	Right Corner Assembly			X	X	X
5	521-433	Partition Assembly	X	X			
5	521-437	Partition Assembly			X	X	X
6	S523-151	Drain Pan Assembly with Fitting	X	X			
6	S523-152	Drain Pan Assembly with Fitting			X	X	X
7	507-217-4	Top Assembly	X	X			
7	507-334-4	Top Assembly			X	X	X
8	553-466-4	Side Assembly	X	X			
8	501-530-4	Side Assembly			X	X	X
9	501-358-4	Side Assembly	X	X			
9	501-530-4	Side Assembly			X	X	X
10	S553-462-4	Upper Door Assembly	X	X			
10	S553-465-4	Upper Door Assembly			X	X	X
11	S553-463-4	Lower Door Assembly	X	X			
11	S553-464-4	Lower Door Assembly			X	X	X
12		Control Panel (See Control Panel Drawing)	X	X	X	X	X
13	136-565	Control Panel Fill	X	X			
13	136-566	Control Panel Fill			X	X	X
14	133-194	Control Panel Door	X	X	X	X	X
15	140-306	Water Coil Support Channel	2	2	2	2	2
16	140-307	Blower Side	2	2	2	2	2
17	140-263	Blower Slide End	2	2			
17	140-305	Blower Slide End			2	2	2
18	144-177	Blower Slide	2	2			
18	145-186	Blower Slide			2	2	2
19	105-1035-4	Plenum Angle Assembly	X	X			
19	105-1161-4	Plenum Angle Assembly			4	4	4
20	131-156-4	Filter Rack Wrapper	X	X			
20	131-158-4	Filter Rack Wrapper			X	X	X
21	165-591-4	Filter Rack Channel			X	X	X
22	S131-157-4	Filter Rack Door	X	X			
22	S131-159-4	Filter Rack Door			X	X	X
23	140-356	Compressor Mounting Plate	X	X	X	X	X

FUNCTIONAL COMPONENTS

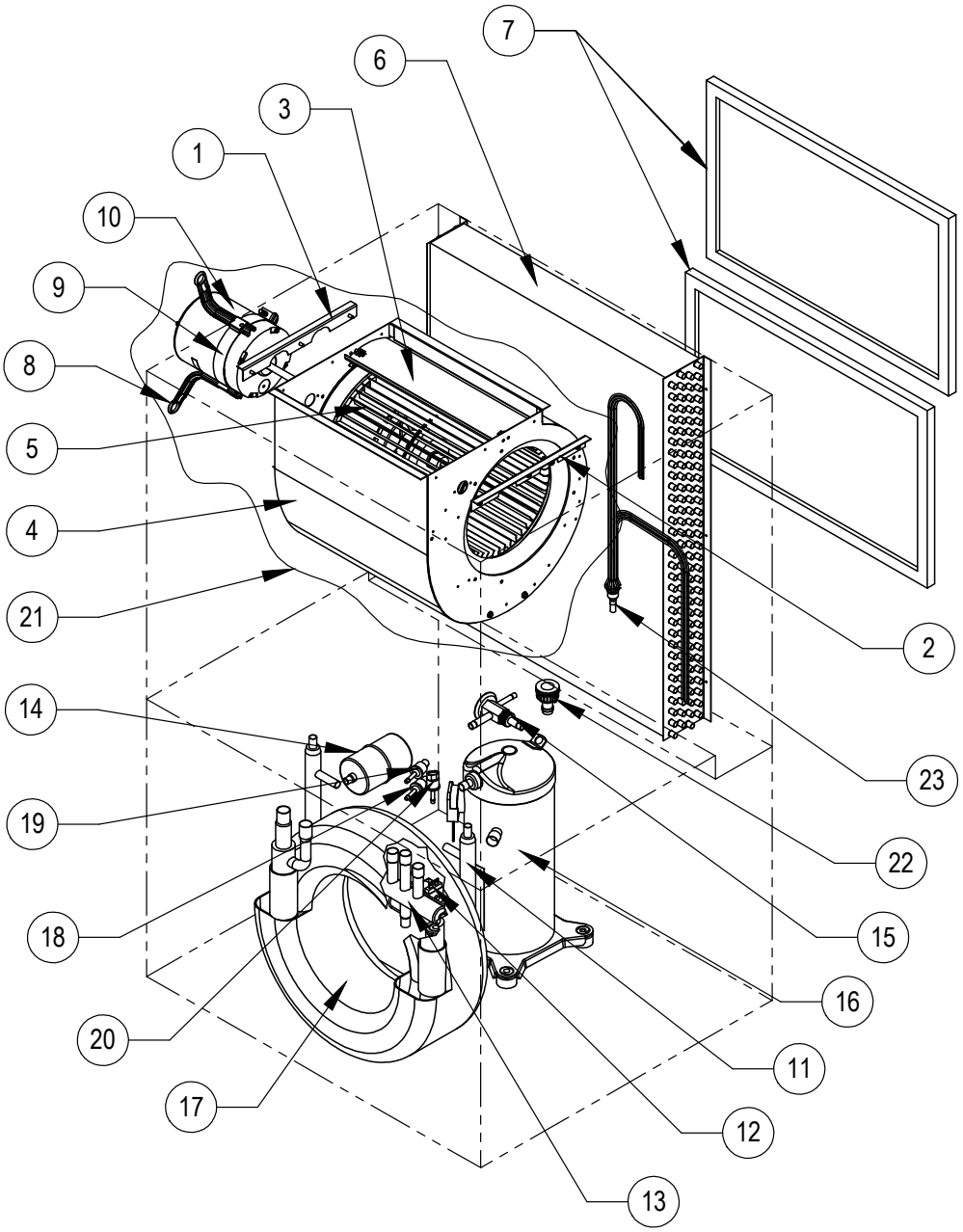

SEXP-533

Drawing No.	Part No.	Description	GV27S3AAC	GV27S3AAN	GV38S3AAC	GV38S3AAN	GV51S3AAC	GV51S3AAN	GV61S3AAC	GV61S3AAN	GV71S3AAC	GV71S3AAN
1	104-1033	Right Blower Angle	X	X	X	X						
1	104-1162	Right Blower Angle					X	X	X	X	X	X
2	104-1034	Left Blower Angle	X	X	X	X						
2	104-1162	Left Blower Angle					X	X	X	X	X	X
3	144-201	Diffuser	X	X	X	X						
3	144-202	Diffuser					X	X	X	X	X	X
4	151-113	Blower Housing	X	X	X	X						
4	151-118	Blower Housing					X	X	X	X	X	X
5	5152-014	Blower Wheel	X	X	X	X						
5	5152-061	Blower Wheel					X	X	X	X	X	X
6	5062-157BX	Evaporator Coil	X	X	X	X						
6	5062-158BX	Evaporator Coil					X	X				
6	5062-159BX	Evaporator Coil							X	X		
6	917-0181BX	Evaporator Coil									X	X
7	7004-040	Filter 20 x 25 x 2 MERV 6	X	X	X	X						
7	7004-025	Filter 16 x 25 x 2 MERV 6					2	2	2	2	2	2
8	8620-034	Motor Mount Kit	X	X	X	X	X	X	X	X	X	X
9	8620-034	Motor Mount Kit	X	X	X	X	X	X	X	X	X	X
10	S8105-056-0054	1/3 HP Programmed Motor with Control	X	X								
10	C8105-056-0054	Control-Only Replacement for Motor	X	X								
10	S8106-045-0055	1/2 HP Programmed Motor with Control			X	X						
10	C8106-045-0055	Control-Only Replacement for Motor			X	X						
10	S8106-045-0056	1/2 HP Programmed Motor with Control					X	X				
10	C8106-045-0056	Control-Only Replacement for Motor					X	X				
10	S8107-013-0057	3/4 HP Programmed Motor with Control							X	X		
10	C8107-013-0057	Control-Only Replacement for Motor							X	X		
10	S8107-013-0058	3/4 HP Programmed Motor with Control									X	X
10	C8107-013-0058	Control-Only Replacement for Motor									X	X
11	5052-019	Desuperheater Coil	X	X	X	X	X	X	X	X	X	X
12	5650-042	Reversing Valve Solenoid, Red Casing (Ranco)	X	X	X	X	X	X	X	X	X	X
12	5650-046	Reversing Valve Solenoid, Black Casing (San Hua)	X	X	X	X	X	X	X	X	X	X
13	5650-038	Reversing Valve with 24V Solenoid Coil	X	X								
13	5650-039	Reversing Valve with 24V Solenoid Coil			X	X						
13	5650-040	Reversing Valve with 24V Solenoid Coil					X	X	X	X		
13	5650-041	Reversing Valve with 24V Solenoid Coil									X	X
14	5201-009	Bi-Direct Filter Drier	X	X	X	X						
14	5201-010	Bi-Direct Filter Drier					X	X	X	X	X	X
15	5651-206	Expansion Valve	X	X								
15	5651-222	Expansion Valve			X	X						
15	5651-208	Expansion Valve					X	X				
15	5651-220	Expansion Valve							X	X		
15	5651-242	Expansion Valve									X	X
16	8000-394	Compressor	X	X								
16	8000-379	Compressor			X	X						
16	8000-382	Compressor					X	X				
16	8000-385	Compressor							X	X		
16	8000-395	Compressor									X	X
17	S917-0335	Water Coil Assembly (Copper-Closed Loop)	X									
17	S917-0336	Water Coil Assembly (Cupronickel-Open Loop)		X								
17	S917-0333	Water Coil Assembly (Copper-Closed Loop)			X		X					
17	S917-0334	Water Coil Assembly (Cupronickel-Open Loop)				X		X				
17	S917-0074	Water Coil Assembly (Copper-Closed Loop)							X			
17	S917-0064	Water Coil Assembly (Cupronickel-Open Loop)								X		
17	S917-0127	Water Coil Assembly (Copper-Closed Loop)									X	
17	S917-0141	Water Coil Assembly (Cupronickel-Open Loop)										X
18	1804-0405	Low Pressure Switch (8406-121) Ground Water 60# Cut-Out, Blue Wires	X	X	X	X	X	X	X	X	X	X
19	1804-0404	Low Pressure Switch (8406-120) Ground Loop 45# Cut-Out, Yellow Wires	X	X	X	X	X	X	X	X	X	X
20	1804-0327	High Pressure Switch (8406-113)	X	X	X	X	X	X	X	X	X	X
21	900-295-001	Complete Blower Assembly	X	X								
21	900-296-001	Complete Blower Assembly			X	X						
21	900-297-001	Complete Blower Assembly					X	X				
21	900-298-001	Complete Blower Assembly							X	X		
21	900-298-002	Complete Blower Assembly									X	X
22	6094-011	3/4" Barbed Drain Pan Fitting	X	X	X	X	X	X	X	X	X	X
23	S800-0374	Distributor Assembly	X	X	X	X						
23	S800-0394	Distributor Assembly					X	X				
23	S800-0390	Distributor Assembly							X	X		
23	S800-0391	Distributor Assembly									X	X
NS	3000-1222	Compressor Power Plug	X	X	X	X	X	X	X	X	X	X
NS	3000-1223	Compressor Staging Solenoid Plug	X	X	X	X	X	X	X	X	X	X
NS	6094-014	Double O-Ring	X	X	X	X	X	X	X	X	X	X
NS	6094-015	Retaining Cap for Plug Seal	X	X	X	X	X	X	X	X	X	X
NS	910-1931	Water Flow Switch	X	X	X	X	X	X	X	X	X	X
NS	3000-1278	Blower Motor Power Plug	X	X	X	X	X	X	X	X	X	X
NS	3000-1315	Blower Motor Speed Control Plug	X	X	X	X	X	X	X	X	X	X

CONTROL PANEL

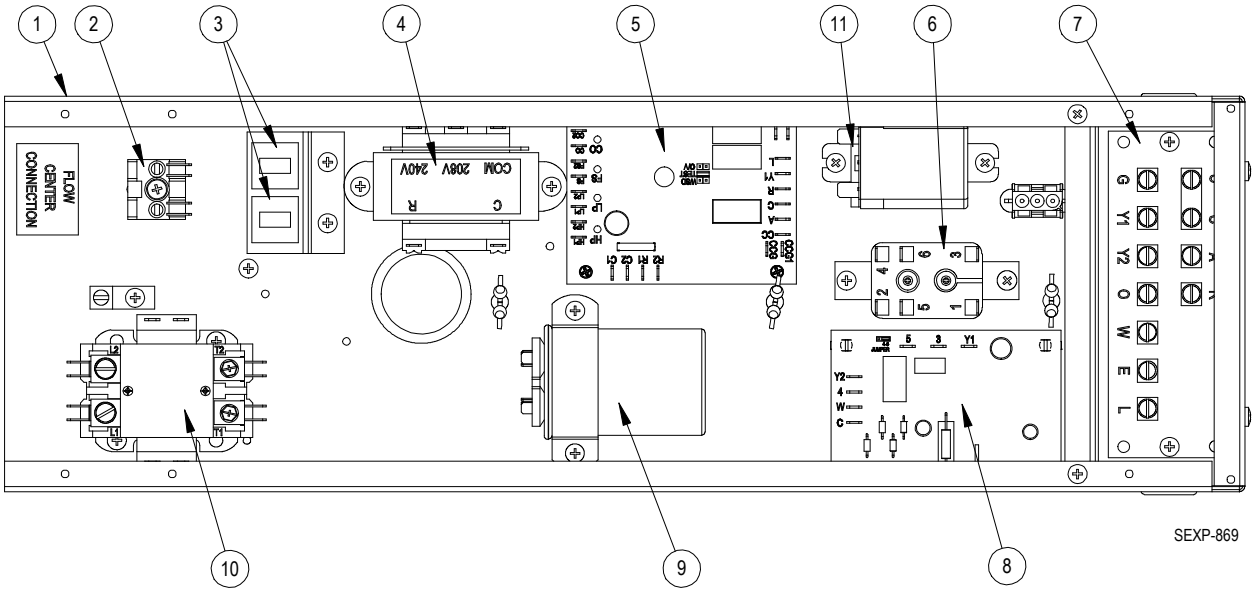

Drawing No.	Part No.	Description	GV27S2	GV38S2	GV51S2	GV61S2	GV71S2
1	517-394	Control Panel (Sheet Metal)	X	X	X	X	X
2	8607-030	Terminal Block	X	X	X	X	X
3	8614-036	Mini Circuit Breaker 3-Amp	2	2	2	2	2
4	8407-034	40VA Transformer 240/208 x 24V	X	X	X	X	X
5	8620-228	Geothermal Compressor Control Module	X	X	X	X	X
6	8201-015	Relay 1PNO, 1PNC 3A 24V Coil	2	2	2	2	2
7	8607-029	24V Terminal Strip	X	X	X	X	X
8	8201-118	Blower Control	X	X	X	X	X
9	8552-086	Capacitor 35MFD 370V	X				
9	8552-035	Capacitor 40MFD 370V		X			
9	8552-045	Capacitor 30MFD 370V			X		
9	8552-096	Capacitor 40MFD 440V				X	X
10	8401-033	Contactor 2-Pole 20 Amp with Lugs	X	X			
10	8401-034	Contactor 2-Pole 40 Amp with Lugs			X	X	X
11	8201-048	Flow Center Relay	X	X	X	X	X