OIL FIRED FURNACE

REPLACEMENT PARTS MANUAL

Models: **FH085D36D**
FH110D48D
FH110D60D

General Notes

- Revised and/or additional pages may be issued from time to time.
- A complete and current manual consists of pages shown in the following contents section.

Important

- Contact the installing and/or local Bard distributor for all parts requirements. Make sure you have the complete model and serial number available from the unit rating plate.

Contents

Description — Page

Cabinet Components
- Exploded View 1
- Usage List 2

Functional Components
- Exploded View 3
- Usage List 4

Burner Components
- Layout View 5
- Usage List 6

Burner / Combustion Chamber Mounting System
- Layout View 7
- Usage List 8

CLIMATE CONTROL SOLUTIONS

BARD MANUFACTURING COMPANY
Bryan, Ohio 43506

Since 1914...Moving ahead, just as planned.

Manual: 2110-921C
Supersedes: 2110-921B
File: Tab 3
Date: 09-16-02

© Copyright 2002

CABINET COMPONENTS

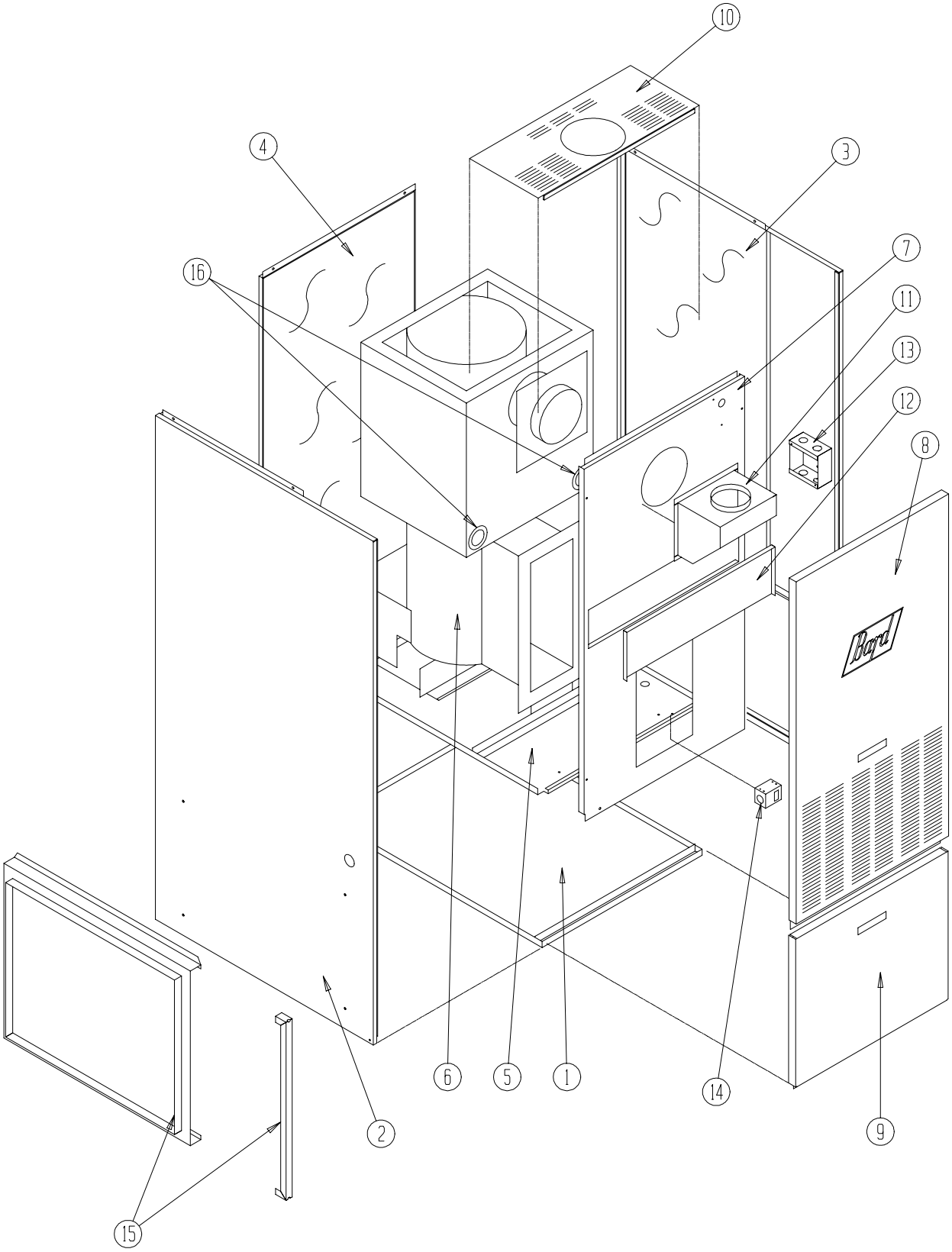

SEXP-031

Drawing No.	Part No.	Description	FH085D36D	FH110D48D	FH110D60D
1	127-174	Lower Base	X	X	X
2	S501-239-4	Left Side (Furnace serial number required)		X	X
2	S501-237-4	Left Side (Furnace serial number required)	X		
3	S501-238-4	Right Side		X	X
3	S501-236-4	Right Side	X		
4	508-077-4	Back Assembly	X		
4	508-076-4	Back Assembly		X	X
5	127-224	Blower Base	X		
5	127-225	Blower Base		X	X
6	S171-208	Heat Exchanger Assembly	X		
6	S171-209	Heat Exchanger Assembly		X	X
7	S520-224	Burner Partition	X		
7	S520-225	Burner Partition		X	X
8	S152-180-4	Burner Door	X		
8	S152-176-4	Burner Door		X	X
9	S152-155-4	Blower Door	X	X	X
10	106-138-4	Top Fill	X	X	X
11	913-0069	Flue Box Assembly	X	X	X
12	S542-037	Cleanout Cover Plate	X	X	X
13	116-157	Junction Box	X	X	X
14	112-031	Door Switch Bracket	X	X	X
15	919-0002	Filter Rack w/Door	X	X	
15	919-0003	Filter Rack w/Door			X
16	8620-007	Cleanout Plug and Gasket	2	2	2
16	1921-038	Cleanout Gasket Only	2	2	2

FUNCTIONAL COMPONENTS

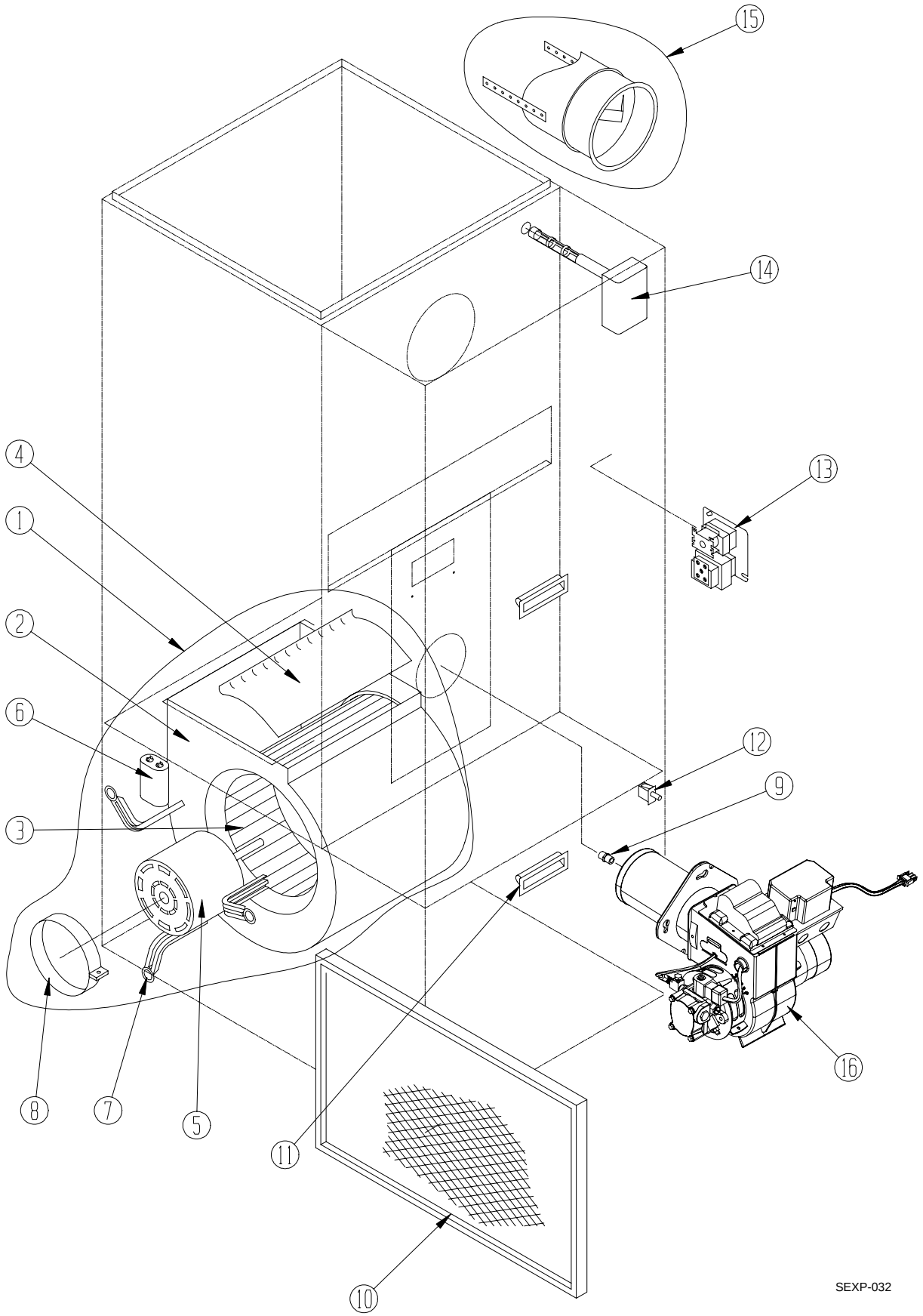

Drawing No.	Part No.	Description	FH085D36D	FH110D48D	FH110D60D
1	900-193	Blower Assembly	X		
1	900-194	Blower Assembly		X	
1	900-195	Blower Assembly			X
2	151-085	Blower Housing Assembly	X		
2	151-082	Blower Housing Assembly		X	
2	5152-050 ①	Blower Housing Assembly			X
3	5152-013	Blower Wheel	X		
3	5152-053	Blower Wheel			X
3	5152-059	Blower Wheel		X	
4	144-127	Diffuser	X		
4	144-129	Diffuser		X	
4	N/A ①	Diffuser			X
5	8105-041	Motor 1/3 HP	X		
5	8106-033	Motor 1/2 HP		X	
5	8107-007	Motor 3/4 HP			X
6	8552-002	Capacitor 5 / 370 MFD	X		
6	8552-004	Capacitor 7.5 / 370 MFD		X	
6	8552-026	Capacitor 15 / 370 MFD			X
7	8200-034	Motor Mount Arm	3	3	
7	8200-035	Motor Mount Arm			3
8	8200-033	Motor Mount Band	X	X	X
9	9011-016	Nozzle .75 GPH 70 degree	X		
9	9011-018	Nozzle 1.00 GPH 70 degree		X	X
10	7003-004	Washable Filter 16 x 25 x 1	X	X	
10	7003-028	Washable Filter 20 x 25 x 1			X
11	1171-025	Door Pull	X	X	X
12	8406-047	Door Switch	X	X	X
13	8201-006	Fan Center (2 speed relay)	X	X	X
14	820[illegible]1	Fan / Limit Control	X	X	X
15	8620-031	Barometric Damper	X	X	X
16	9020-026	Burner Assembly (Includes nozzle part no. 9011-016)	X		
16	9020-027	Burner Assembly (Includes nozzle part no. 9011-018)		X	X
NS	4047-115	Wire Diagram	X	X	X

① Balloon no. 2, part no. 5152-050 includes housing, diffuser and blower wheel part no. 5152-053

NS = Not Shown

BURNER COMPONENTS

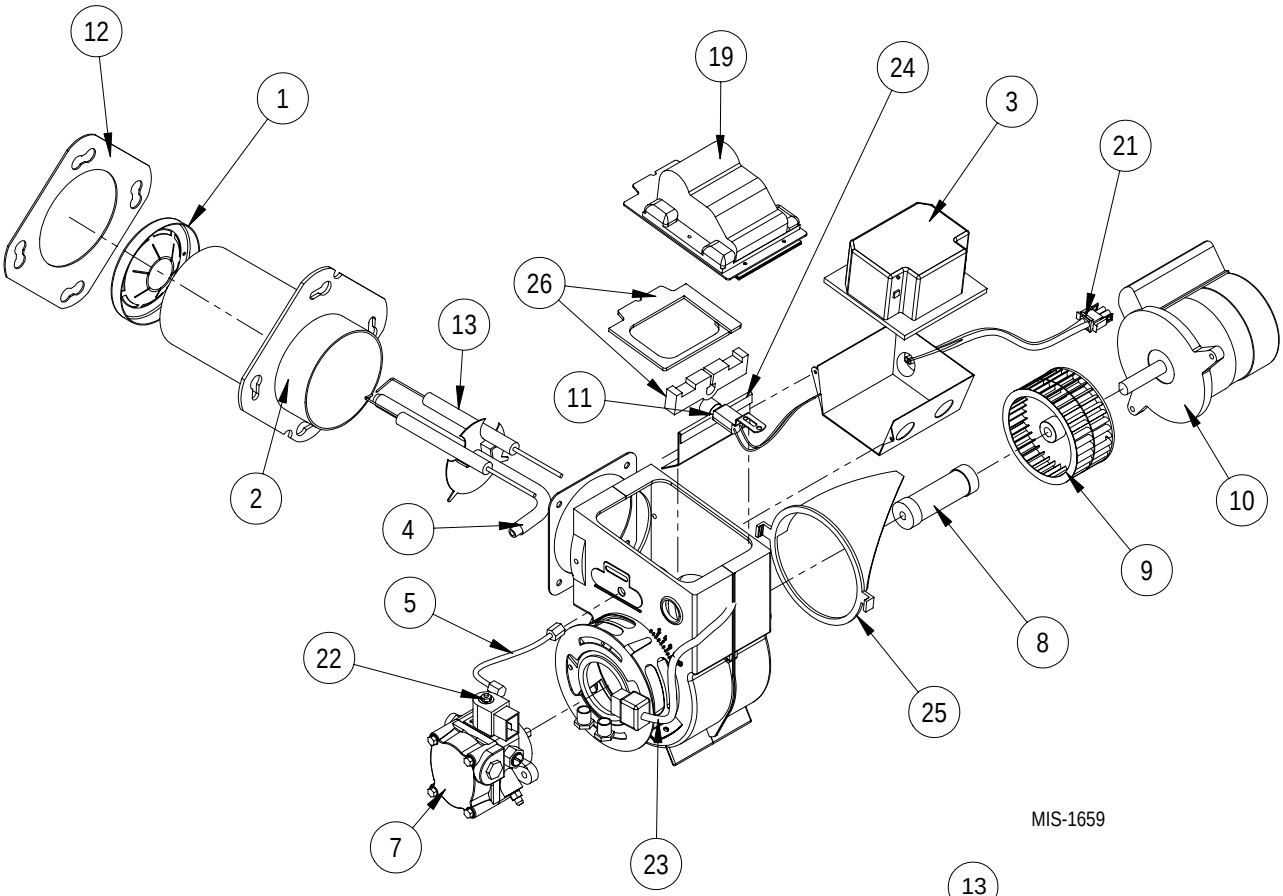

MIS-1659

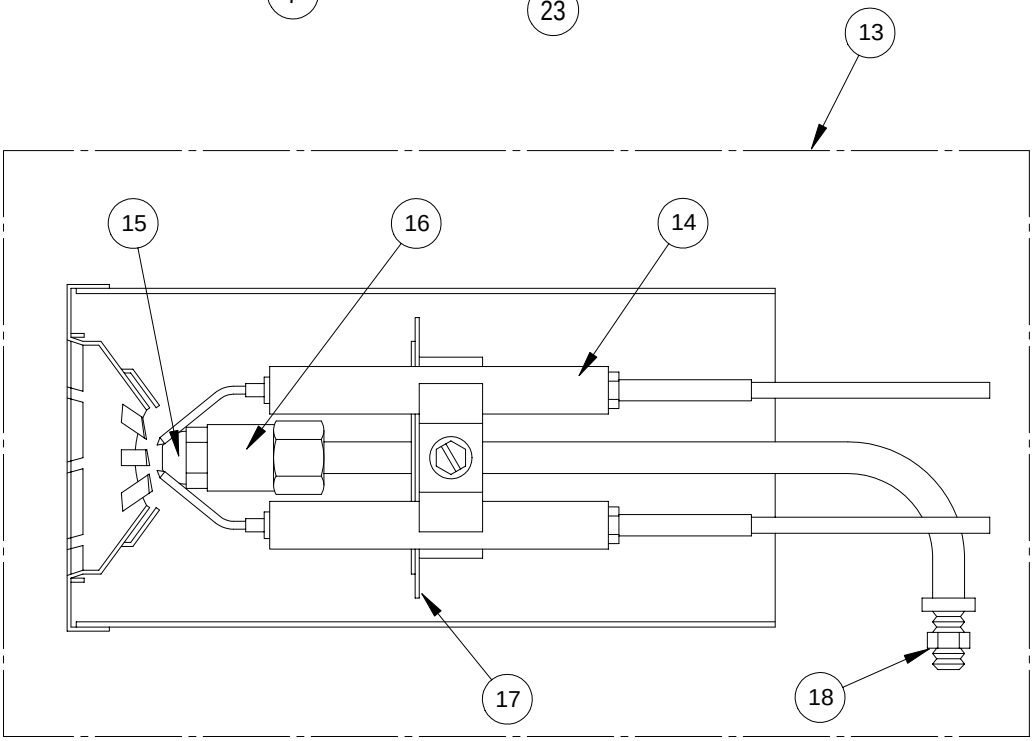

MIS-1663

Drawing No.	Bard Part No.	Supplier Part No.	Description	FH085D36D	FH110D48D	FH110D60D
1	9022-034	360004	Head (F4)	X		
1	9022-042	360006	Head (F6)		X	X
2	9022-004	51236007BK	Air Tube & Flange Assembly	X	X	X
3	9022-080	7456U	Primary Control	X	X	X
4	9022-007	571801	Bulkhead Fitting	X	X	X
5	9022-008	5636	Connector Tube	X	X	X
7	9022-082	21844U	"Cleancut" Oil Pump	X	X	X
8	9022-011	2454	Coupling	X	X	X
9	9022-083	2999	Blower Wheel	X	X	X
10	9022-084	21805R/218	PSC Motor 1/7 H.P.	X	X	X
11	9022-085	7006Q	CAD Cell	X	X	X
12	9022-021	3811	Mounting Flange Gasket	X	X	X
13	9022-014	NL90YH	Nozzle Line Electrode Assembly	X	X	X
14	9022-017	5780	Electrode Insulator Assembly	X	X	X
15	9011-016	2663	Nozzle .75 GPH 70 degree A	X		
15	9011-018	2711	Nozzle 1.00 GPH 70 degree A		X	X
16	9022-016	213U	Nozzle Adapter	X	X	X
17	9022-023	3384	Static Plate (3-3/8")	X	X	X
18	9022-018	3666	Bulkhead Fitting Locknut	X	X	X
19	9022-079	7440	Solid State Igniter	X	X	X
20	9022-086	3741	Junction Box	X	X	X
21	9022-055	31838	Power Cord	X	X	X
22	9022-087	21755	Solenoid Valve Coil	X	X	X
23	9022-088	21807	Solenoid Valve Cord	X	X	X
24	9022-089	3708	Restricter Baffle	X	X	X
25	9022-090	31231	Air Guide	X	X	X
26	9022-093	51304	Igniter Gasket Kit	X	X	X

BURNER/COMBUSTION CHAMBER MOUNTING SYSTEM

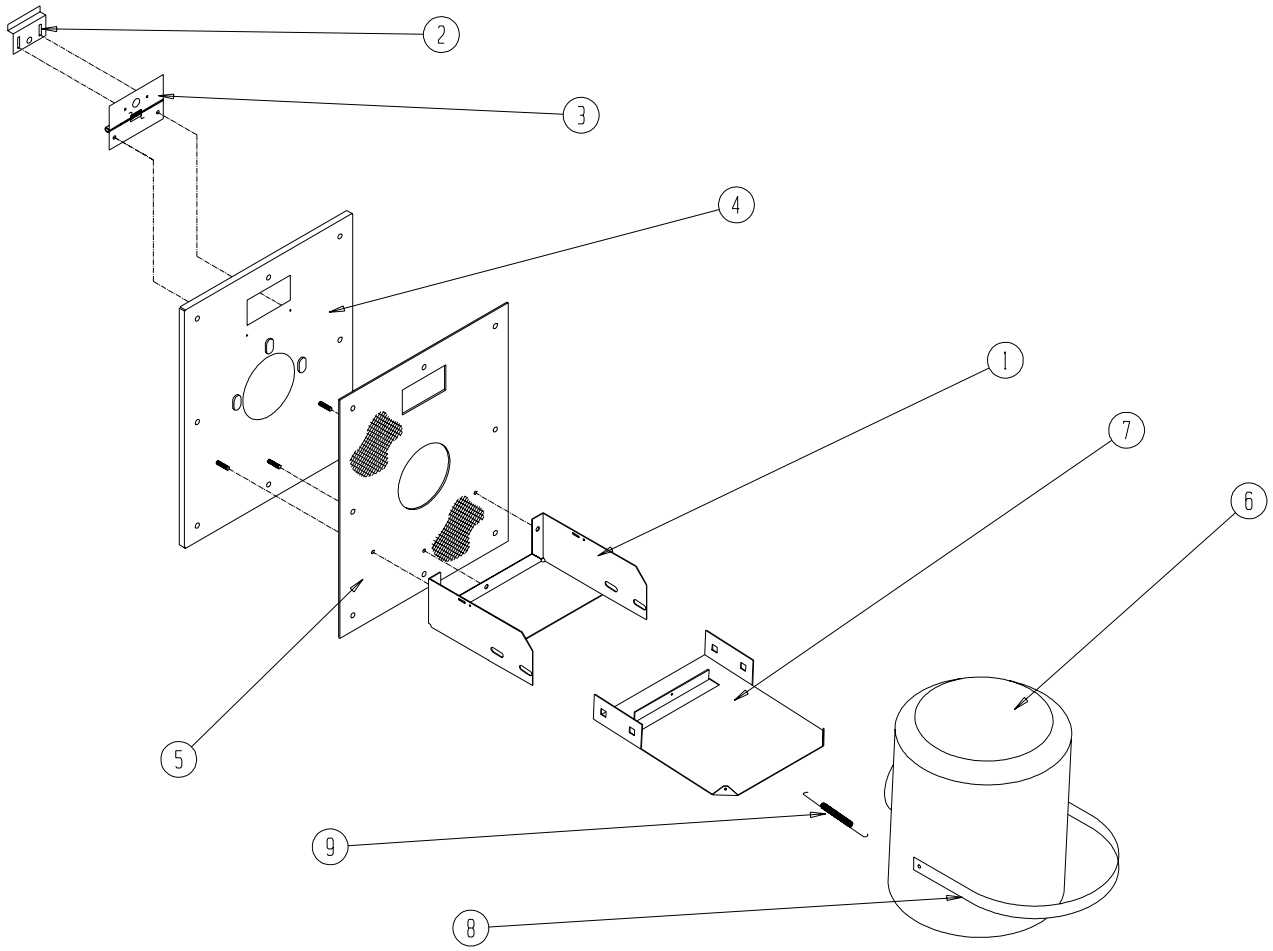

SEXP-197

Drawing No.	Part No.	Description	FH085D36D	FH110D48D	FH110D60D
1	112-159	Combustion Chamber Bracket	X	X	X
2	142-026	Inspection Door Cover Plate	X	X	X
3	142-027	Inspection Door Hinge	X	X	X
4	161-033	Front Plate Assembly	X	X	X
5	1921-026	Front Plate Gasket	X	X	X
6	7090-014	Combustion Chamber	X	X	X
7	S112-160	Bracket Extension	X	X	X
8	140-198	Combustion Chamber Support	X	X	X
9	5401-004	Stainless Steel Spring	X	X	X
	S173-076	Complete Assembly of All Parts	X	X	X