REPLACEMENT PARTS MANUAL

OIL FIRED FURNACE

Models: FH085D36E
FH110D48E
FH110D60E

General Notes

- Revised and/or additional pages may be issued from time to time.
- A complete and current manual consists of pages shown in the following contents section.

Important

- Contact the installing and/or local Bard distributor for all parts requirements. Make sure you have the complete model and serial number available from the unit rating plate.

Contents

Description — Page

Cabinet and Functional Components
- Exploded View 2
- Usage List 3
- Usage List 4
- Blank Page 5

Control Panel
- Layout View 6
- Usage List 7

Blower Housing
- Exploded View 8
- Usage List 9

Burner Assembly
- Exploded View 10
- Usage List 11

Burner Components
- Exploded View 12
- Usage List 13

Bard Manufacturing Company, Inc.
Bryan, Ohio 43506

Since 1914...Moving ahead, just as planned.

Manual: 2110-925E
Supersedes: 2110-925D
File: Tab 3
Date: 01-16-09

© Copyright 2003

CABINET AND FUNCTIONAL COMPONENTS

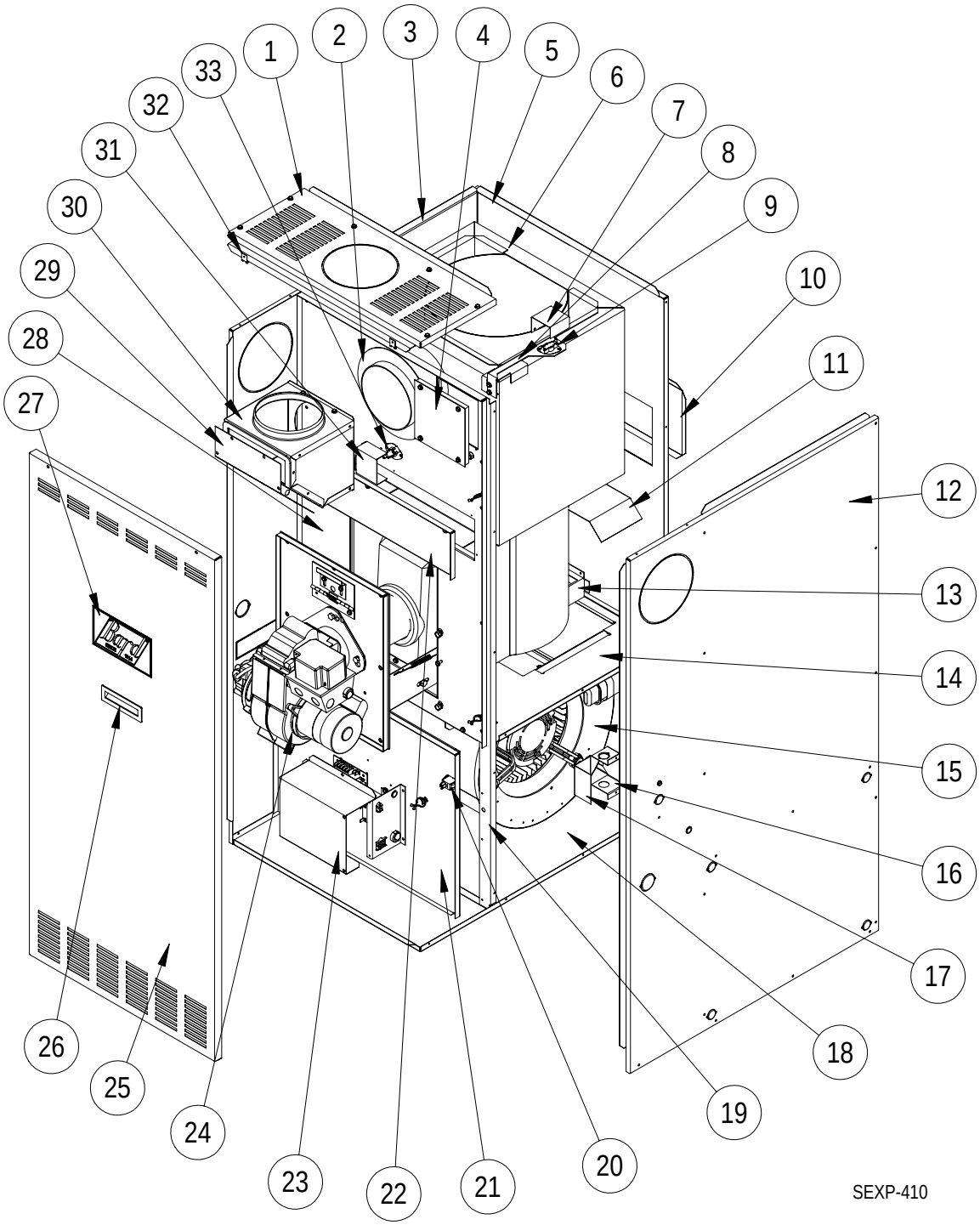

Drawing No.	Part No.	Description	FH085D36E	FH110D48E	FH110D60E
1	S107-231-4	Top Fill	X	X	X
2	1921-037	Smoke Pipe Gasket	X	X	X
3	S101-408-4	Left Side	X		
3	S101-410-4	Left Side		X	X
4	S142-089	Limit Access Door	X	X	X
5	S109-169-4	Back	X		
5	S109-170-4	Back		X	X
6	S171-267	Heat Exchanger	X		
6	S171-268	Heat Exchanger		X	X
7	143-091	Limit Cover	X	X	X
8	112-312	Limit Bracket	X	X	X
9	8402-142	Primary Limit L145	X		
9	8402-143	Primary Limit L155		X	X
10	S143-088-4	Rear Clean Out Cover	X	X	X
11	134-109	Air Deflector	X		
11	134-205	Air Deflector		X	X
12	S101-407-4	Right Side	X		
12	S101-409-4	Right Side		X	X
13	140-315	Rear Heat Exchanger Leg	X		
13	140-316	Rear Heat Exchanger Leg		X	X
14	126-327	Blower Base	X		
14	127-329	Blower Base		X	X
15	S900-259	Blower Assembly	X		
15	S900-260	Blower Assembly		X	
15	S900-261	Blower Assembly			X
16	117-251	Junction Box	X	X	X
17	133-178	Junction Box Cover	X	X	X
18	S127-328	Lower Base	X	X	X
19	105-1133	Side Angle	2	2	2
20	8406-076	Door Switch SPST 16 Amp N.O.	X	X	X

Table Continued on Page 4

Table Continued from Page 3

Drawing No.	Part No.	Description	FH085D36E	FH110D48E	FH110D60E
21	S153-351	Blower Door	X		
21	S153-353	Blower Door		X	X
22	S143-090	Clean Out Cover	X	X	X
23	132-177	Control Cover	X	X	X
24	Burner Assy.	See Burner Assembly Parts List (Pages 10 & 11)	X	X	X
25	S153-350-4	Vestibule Door	X		
25	S153-352-4	Vestibule Door		X	X
26	1171-025	Plastic Door Pull	X	X	X
27	5252-010	Bard Nameplate	X	X	X
28	S120-361	Heat Exchanger Partition	X		
28	S120-362	Heat Exchanger Partition		X	X
29	169-152	Flue Box Door	X	X	X
30	S169-150	Flue Box Assembly	X	X	X
31	143-094	Partition Limit Cover	X	X	X
32	1012-314	#10 - 18 U-Clips	2	2	2
33	8402-147	Backup Limit L190	X	X	X

This page intentionally left blank.

CONTROL PANEL

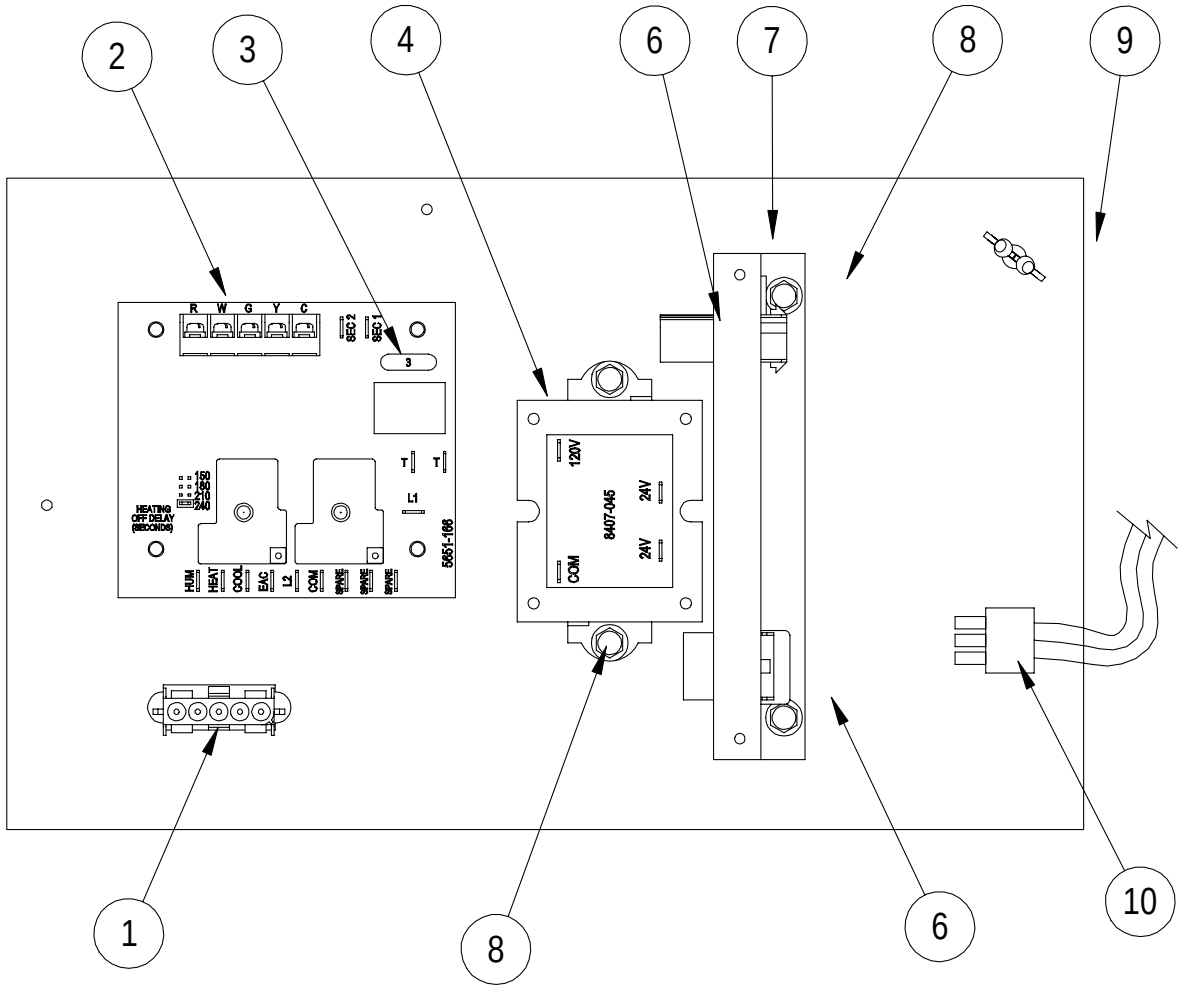

SEXP-413 A

Drawing No.	Part No.	Description	FH085D36E	FH110D48E	FH110D60E
1	3000-1177	Wire Assembly	X	X	X
2	5651-166	Oil Furnace Blower Control	X	X	X
3	8614-045	3 Amp Fuse	X	X	X
4	8407-045	Transformer 120/24V 40 VA	X	X	X
5	1012-153	Screw Type AB #10 – 16x1/2	X	X	X
6	3000-1176	Wire Assembly (Inside Control Panel)	X	X	X
7	113-296	Plug Bracket	X	X	X
8	1012-086	Screw Type AB #10 – 16x1/2 w/nibs	X	X	X
9	7950-027	Purse Lock Wire Tie	X	X	X
10	3000-1175	Wire Assembly (Outside Control Panel)	X	X	X

BLOWER ASSEMBLY

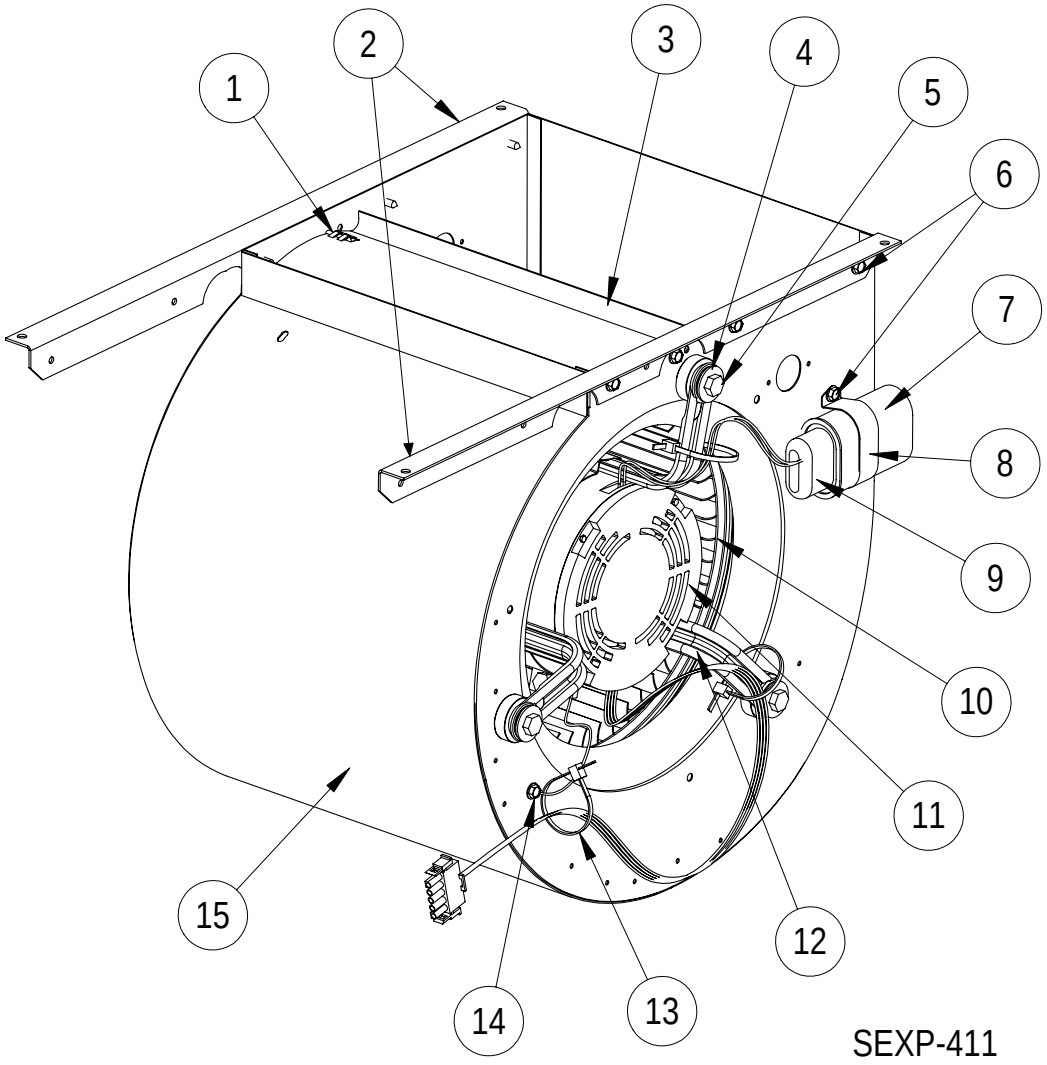

Drawing No.	Part No.	Description	S900-259	S900-260	S900-261
1	1012-088	Screw Type AB #10 – 16x3/4	2	2	①
2	104-1134	Blower Angle	2		2
2	104-1137	Blower Angle		2	
3	144-128	Diffuser	X		
3	144-129	Diffuser		X	①
4	1012-109	Washer	3	3	3
5	1012-076	1/4 – 20x1-1/4 Type I Bolt	3	3	3
6	1012-086	Screw Type AB #10 – 16x1/2 w/nibs	10	10	10
7	8552-002	Capacitor 5.0 MFD 370V	X		
7	8552-004	Capacitor 7.5 MFD 370V		X	
7	8552-026	Capacitor 15.0 MFD 370V			X
8	8550-003	Capacitor Bracket	X	X	
8	8550-006	Capacitor Bracket			X
9	8611-002	Capacitor Boot	X	X	X
10	5152-014	Blower Wheel CW 1/2" 10-9DD	X		
10	5152-059	Blower Wheel CCW 1/2" 10-10DD		X	
10	5152-053	Blower Wheel CW 1/2" 11-10DD			X
11	8105-040	Motor 1/3 HP 115V CCW 1075 3 Speed	X		
11	8106-033	Motor 1/2 HP 115V CW 1075 4 Speed		X	
11	8107-007	Motor 3/4 HP 115V CCW 1075 4 Speed			X
12	8620-034	Motor Mount Kit	X	X	X
13	7950-009	Wire Tie	X	X	X
14	1012-153	Screw Type AB #10 – 16x1/2	X	X	X
15	151-073	Blower Housing	X		
15	151-082	Blower Housing		X	
15	①	Blower Housing			①

① Part #5152-050 includes housing, diffuser and blower wheel part #5152-053.

BURNER ASSEMBLY

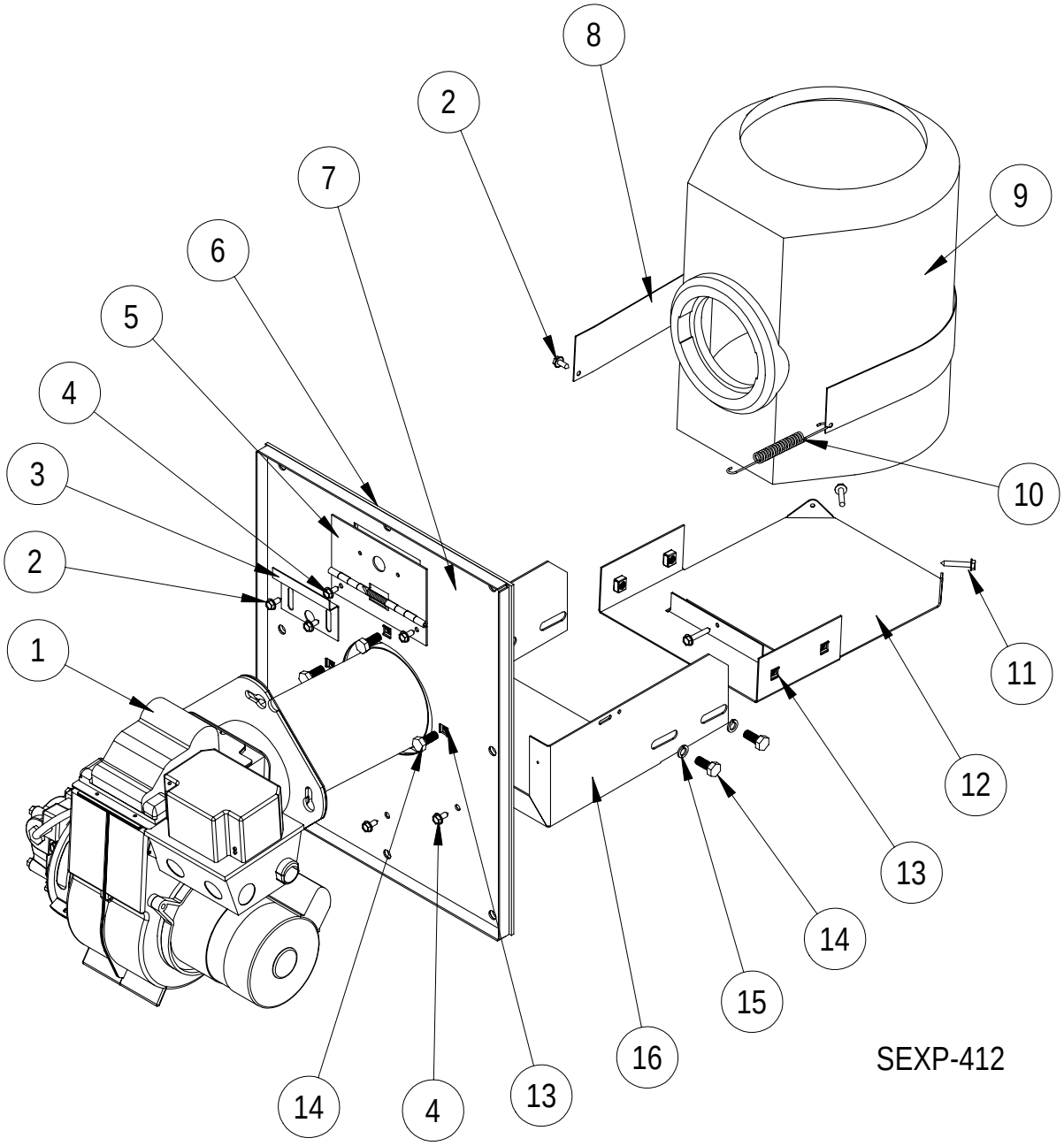

Drawing No.	Part No.	Description	FH085D36E	FH110D48E	FH110D60E
1	9020-034	AFG Burner w/GeniSys Primary .75 GHP 70° H	X		
1	9020-035	AFG Burner w/GeniSys Primary 1.00 GHP 70° H		X	X
2	1012-153	Screw Type AB #10 – 16x1/2"	3	3	3
3	143-026	Inspection Door Cover Plate	X	X	X
4	1012-086	Screw Type AB #10 – 16x1/2" w/nibs	5	5	5
5	142-027	Inspection Door Hinge	X	X	X
6	1921-057	Front Plate Gasket	X	X	X
7	S160-036	Front Plate Assembly	X	X	X
8	140-198	Combustion Chamber Support	X	X	X
9	7090-014	Pyrolite Combustion Chamber	X	X	X
10	5401-004	Stainless Steel Spring	X	X	X
11	1012-145	Screw Type AB #10 – 16x1"	3	3	3
12	S140-292	Bracket Extension	X	X	X
13	1012-218	1/4 – 20 Cage Nut	7	7	7
14	1012-051	1/4 – 20x 3/4 Hex Head Bolt	7	7	7
15	1012-126	1/4" Type "A" Washer	4	4	4
16	112-297	Combustion Chamber Bracket	X	X	X

BURNER COMPONENTS

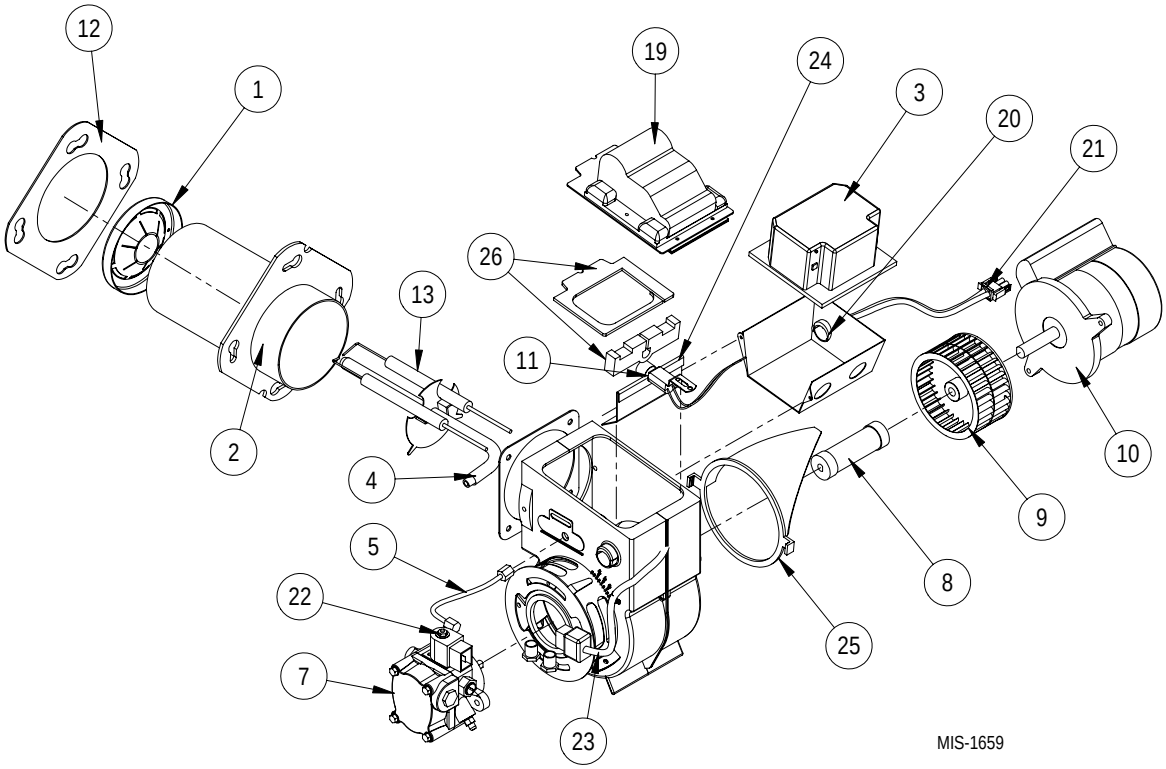

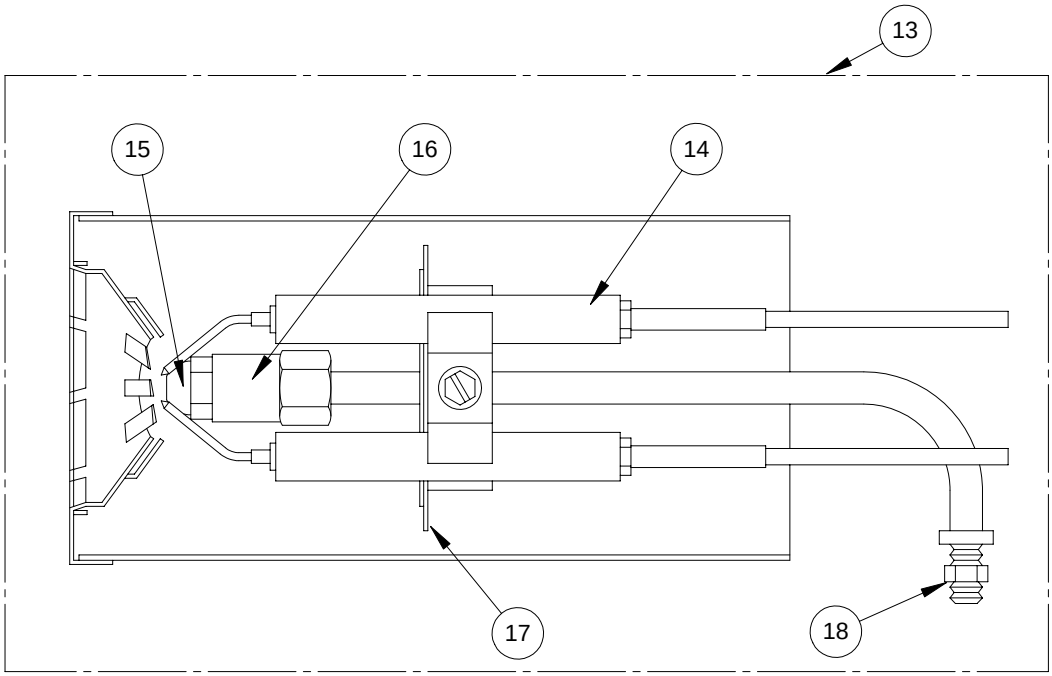

MIS-1663

Drawing No.	Bard Part No.	Supplier Part No.	Description	FH085D36E	FH110D48E	FH110D60E
1	9022-034	360004	Head (F4)	X		
1	9022-042	360006	Head (F6)		X	X
2	9022-004	51236007BK	Air Tube & Flange Assembly	X	X	X
3	9022-080	7456U	Primary Control	X	X	X
3	9022-095 *	7505B	Primary Control (GeniSys)	X	X	X
4	9022-007	571801	Bulkhead Fitting	X	X	X
5	9022-008	5636	Connector Tube	X	X	X
7	9022-082	21844U	"CleanCut" Oil Pump	X	X	X
8	9022-011	2454	Coupling	X	X	X
9	9022-045	2999	Blower Wheel	X	X	X
10	9022-084	21805R/218	PSC Motor 1/7 H.P.	X	X	X
11	9022-085	7006Q	CAD Cell	X	X	X
12	9022-021	3811	Mounting Flange Gasket	X	X	X
13	9022-014	NL90YH	Nozzle Line Electrode Assembly	X	X	X
14	9022-017	5780	Electrode Insulator Assembly	X	X	X
15	9011-016	2663	Nozzle .75 GPH 70 Degree A	X		
15	9011-018	2711	Nozzle 1.00 GPH 70 Degree A		X	X
16	9022-016	213U	Nozzle Adapter	X	X	X
17	9022-023	3384	Static Plate (3-3/8")	X	X	X
18	9022-018	3666	Bulkhead Fitting Locknut	X	X	X
19	9022-079	7440	Solid State Igniter	X	X	X
20	9022-086	3741	Junction Box	X	X	X
21	9022-055	31838	Power Cord	X	X	X
22	9022-087	21755	Solenoid Valve Coil	X	X	X
23	9022-088	21807	Solenoid Valve Cord	X	X	X
24	9022-089	3708	Restrictor Baffle	X	X	X
25	9022-090	31231	Air Guide	X	X	X
26	9022-093	51304	Igniter Gasket Kit	X	X	X

**** Alternate Control supplied in some 2008 & newer models. The 9020-095 Control replaces the 9020-080 Control in all models.***