# REPLACEMENT PARTS MANUAL

# OIL FIRED FURNACE

## Models: FH085D36F
## FH110D48F
## FH110D60F

## General Notes

- Revised and/or additional pages may be issued from time to time.
- A complete and current manual consists of pages shown in the following contents section.

## Important

- Contact the installing and/or local Bard distributor for all parts requirements. Make sure you have the complete model and serial number available from the unit rating plate.

## Contents


| Description | Page |
|---|---|
| Cabinet and Functional Components | |
| ◆ Exploded View | 2 |
| ◆ Usage List | 3 |
| ◆ Usage List | 4 |
| ◆ Blank Page | 5 |
| Control Panel | |
| ◆ Layout View | 6 |
| ◆ Usage List | 7 |
| Blower Housing | |
| ◆ Exploded View | 8 |
| ◆ Usage List | 9 |
| Burner Assembly | |
| ◆ Exploded View | 10 |
| ◆ Usage List | 11 |
| Burner Components | |
| ◆ Exploded View | 12 |
| ◆ Usage List | 13 |



Bard Manufacturing Company, Inc.
Bryan, Ohio 43506

*Since 1914...Moving ahead, just as planned.*

Manual: 2110-925G
Supersedes: 2110-925F
File: Tab 3
Date: 07-20-10

# CABINET AND FUNCTIONAL COMPONENTS

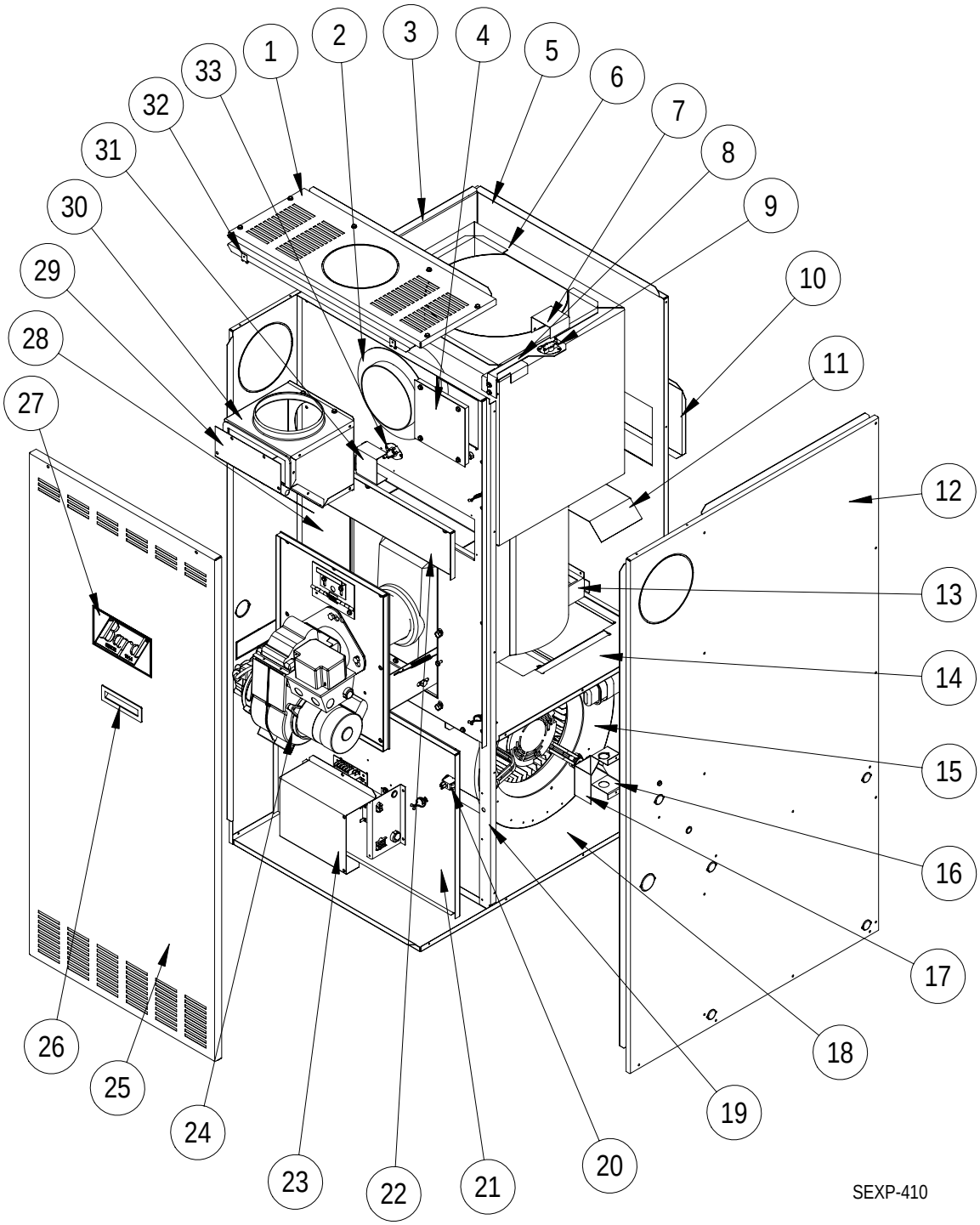

| Drawing No. | Part No. | Description | FH085D36F | FH110D48F | FH110D60F |
|---|---|---|---|---|---|
| 1 | S107-231-4 | Top Fill | X | X | X |
| 2 | 1921-037 | Smoke Pipe Gasket | X | X | X |
| 3 | S101-408-4 | Left Side | X | | |
| 3 | S101-410-4 | Left Side | | X | X |
| 4 | S142-089 | Limit Access Door | X | X | X |
| 5 | S109-169-4 | Back | X | | |
| 5 | S109-170-4 | Back | | X | X |
| 6 | S171-267 | Heat Exchanger | X | | |
| 6 | S171-268 | Heat Exchanger | | X | X |
| 7 | 143-091 | Limit Cover | X | X | X |
| 8 | 112-312 | Limit Bracket | X | X | X |
| 9 | 8402-142 | Primary Limit L145 | X | | |
| 9 | 8402-144 | Primary Limit L150 | | X | |
| 9 | 8402-175 | Primary Limit L140 | | | X |
| 10 | S143-088-4 | Rear Clean Out Cover | X | X | X |
| 11 | 134-109 | Air Deflector | X | | |
| 11 | 134-205 | Air Deflector | | X | X |
| 12 | S101-407-4 | Right Side | X | | |
| 12 | S101-409-4 | Right Side | | X | X |
| 13 | 140-315 | Rear Heat Exchanger Leg | X | | |
| 13 | 140-316 | Rear Heat Exchanger Leg | | X | X |
| 14 | 126-327 | Blower Base | X | | |
| 14 | 127-329 | Blower Base | | X | X |
| 15 | S900-259 | Blower Assembly | X | | |
| 15 | S900-260 | Blower Assembly | | X | |
| 15 | S900-261 | Blower Assembly | | | X |
| 16 | 117-251 | Junction Box | X | X | X |
| 17 | 133-178 | Junction Box Cover | X | X | X |
| 18 | S127-328 | Lower Base | X | X | X |
| 19 | 105-1133 | Side Angle | 2 | 2 | 2 |
| 20 | 8406-076 | Door Switch SPST 16 Amp N.O. | X | X | X |

**Table Continued on Page 4**

**Table Continued from Page 3**

| Drawing No. | Part No. | Description | FH085D36F | FH110D48F | FH110D60F |
|---|---|---|---|---|---|
| 21 | S153-351 | Blower Door | X | | |
| 21 | S153-353 | Blower Door | | X | X |
| 22 | S143-090 | Clean Out Cover | X | X | X |
| 23 | 132-177 | Control Cover | X | X | X |
| 24 | Burner Assy. | See Burner Assembly Parts List (Pages 10 & 11) | X | X | X |
| 25 | S153-350-4 | Vestibule Door | X | | |
| 25 | S153-352-4 | Vestibule Door | | X | X |
| 26 | 1171-025 | Plastic Door Pull | X | X | X |
| 27 | 5252-010 | Bard Nameplate | X | X | X |
| 28 | S120-361 | Heat Exchanger Partition | X | | |
| 28 | S120-362 | Heat Exchanger Partition | | X | X |
| 29 | 169-152 | Flue Box Door | X | X | X |
| 30 | S169-150 | Flue Box Assembly | X | X | X |
| 31 | 143-094 | Partition Limit Cover | X | X | X |
| 32 | 1012-314 | #10 - 18 U-Clips | 2 | 2 | 2 |
| 33 | 8402-147 | Backup Limit L190 | X | X | X |

*This page intentionally left blank.*

# CONTROL PANEL

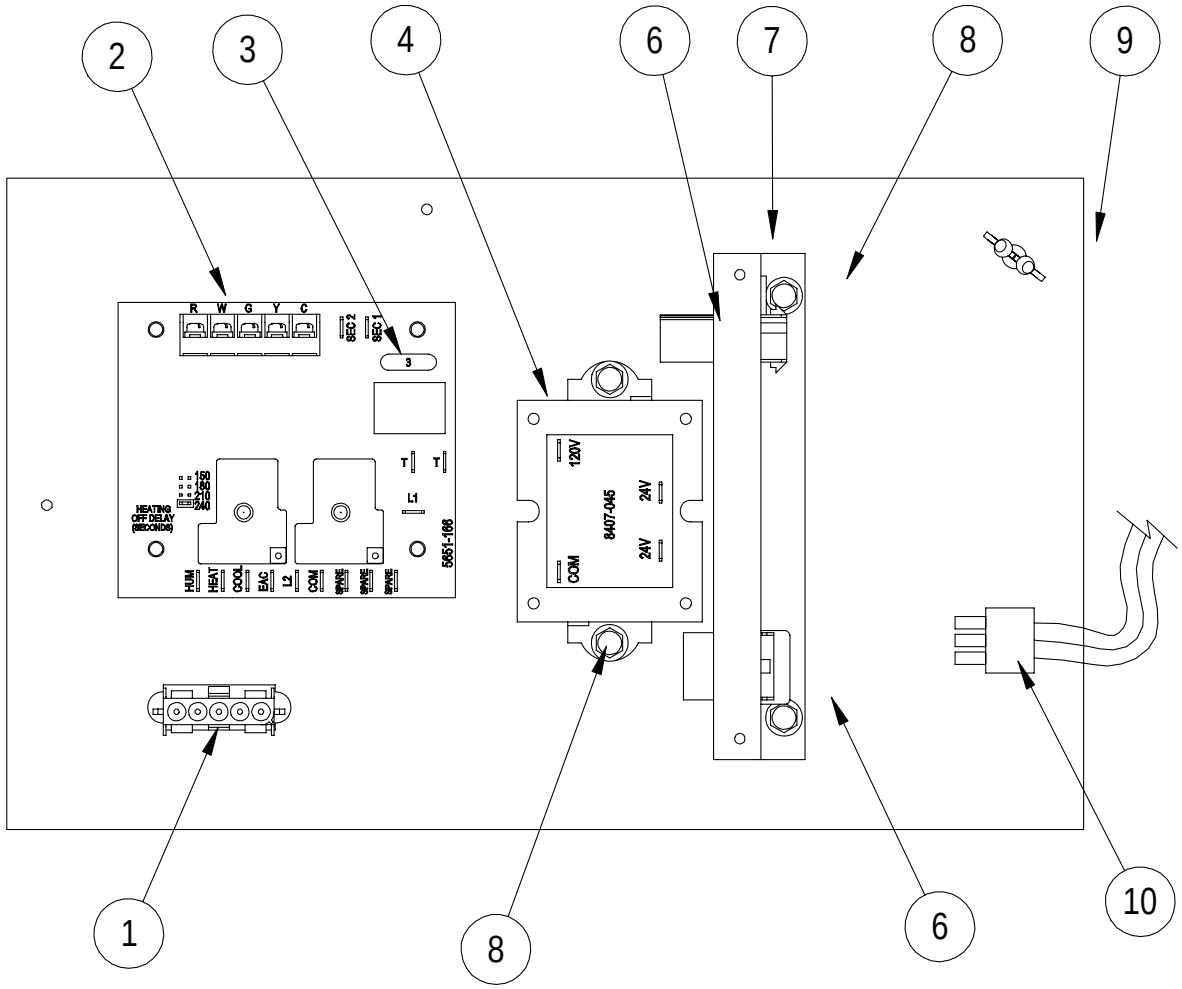


SEXP-413 A

| Drawing No. | Part No. | Description | FH085D36F | FH110D48F | FH110D60F |
|---|---|---|---|---|---|
| 1 | 3000-1177 | Wire Assembly | X | X | X |
| 2 | 5651-166 | Oil Furnace Blower Control | X | X | X |
| 3 | 8614-045 | 3 Amp Fuse | X | X | X |
| 4 | 8407-045 | Transformer 120/24V 40 VA | X | X | X |
| 5 | 1012-153 | Screw Type AB #10 – 16x1/2 | X | X | X |
| 6 | 3000-1176 | Wire Assembly (Inside Control Panel) | X | X | X |
| 7 | 113-296 | Plug Bracket | X | X | X |
| 8 | 1012-086 | Screw Type AB #10 – 16x1/2 w/nibs | X | X | X |
| 9 | 7950-027 | Purse Lock Wire Tie | X | X | X |
| 10 | 3000-1175 | Wire Assembly (Outside Control Panel) | X | X | X |

# BLOWER ASSEMBLY

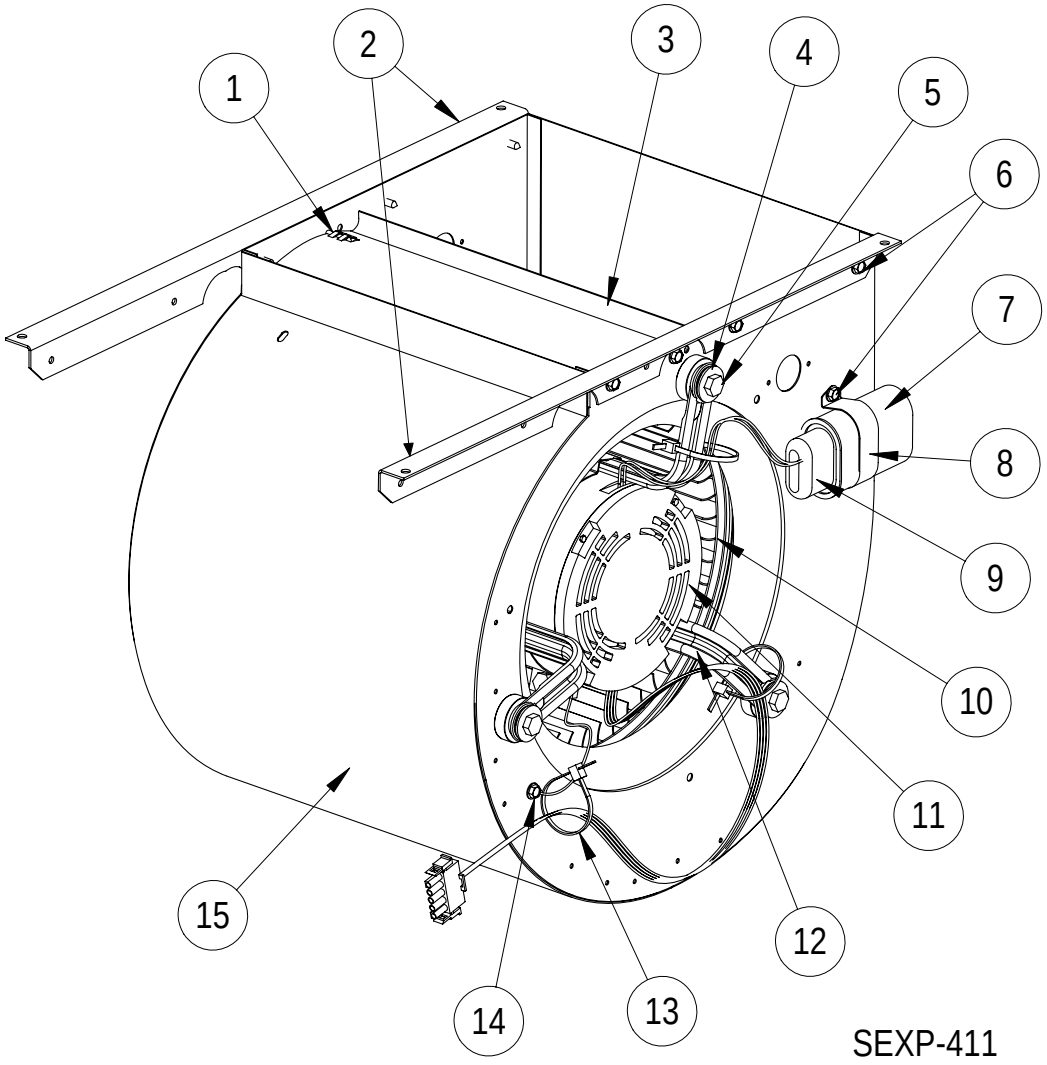

| Drawing No. | Part No. | Description | S900-259 | S900-260 | S900-261 |
|---|---|---|---|---|---|
| 1 | 1012-088 | Screw Type AB #10 – 16x3/4 | 2 | 2 | ① |
| 2 | 104-1134 | Blower Angle | 2 | | 2 |
| 2 | 104-1137 | Blower Angle | | 2 | |
| 3 | 144-128 | Diffuser | X | | |
| 3 | 144-129 | Diffuser | | X | ① |
| 4 | 1012-109 | Washer | 3 | 3 | 3 |
| 5 | 1012-076 | 1/4 – 20x1-1/4 Type I Bolt | 3 | 3 | 3 |
| 6 | 1012-086 | Screw Type AB #10 – 16x1/2 w/nibs | 10 | 10 | 10 |
| 7 | 8552-002 | Capacitor 5.0 MFD 370V | X | | |
| 7 | 8552-004 | Capacitor 7.5 MFD 370V | | X | |
| 7 | 8552-026 | Capacitor 15.0 MFD 370V | | | X |
| 8 | 8550-003 | Capacitor Bracket | X | X | |
| 8 | 8550-006 | Capacitor Bracket | | | X |
| 9 | 8611-002 | Capacitor Boot | X | X | X |
| 10 | 5152-014 | Blower Wheel CW 1/2" 10-9DD | X | | |
| 10 | 5152-059 | Blower Wheel CCW 1/2" 10-10DD | | X | |
| 10 | 5152-053 | Blower Wheel CW 1/2" 11-10DD | | | X |
| 11 | 8105-040 | Motor 1/3 HP 115V CCW 1075 3 Speed | X | | |
| 11 | 8106-033 | Motor 1/2 HP 115V CW 1075 4 Speed | | X | |
| 11 | 8107-007 | Motor 3/4 HP 115V CCW 1075 4 Speed | | | X |
| 12 | 8620-034 | Motor Mount Kit | X | X | X |
| 13 | 7950-009 | Wire Tie | X | X | X |
| 14 | 1012-153 | Screw Type AB #10 – 16x1/2 | X | X | X |
| 15 | 151-073 | Blower Housing | X | | |
| 15 | 151-082 | Blower Housing | | X | |
| 15 | ① | Blower Housing | | | ① |

① Part #5152-050 includes housing, diffuser and blower wheel part #5152-053.

# BURNER ASSEMBLY

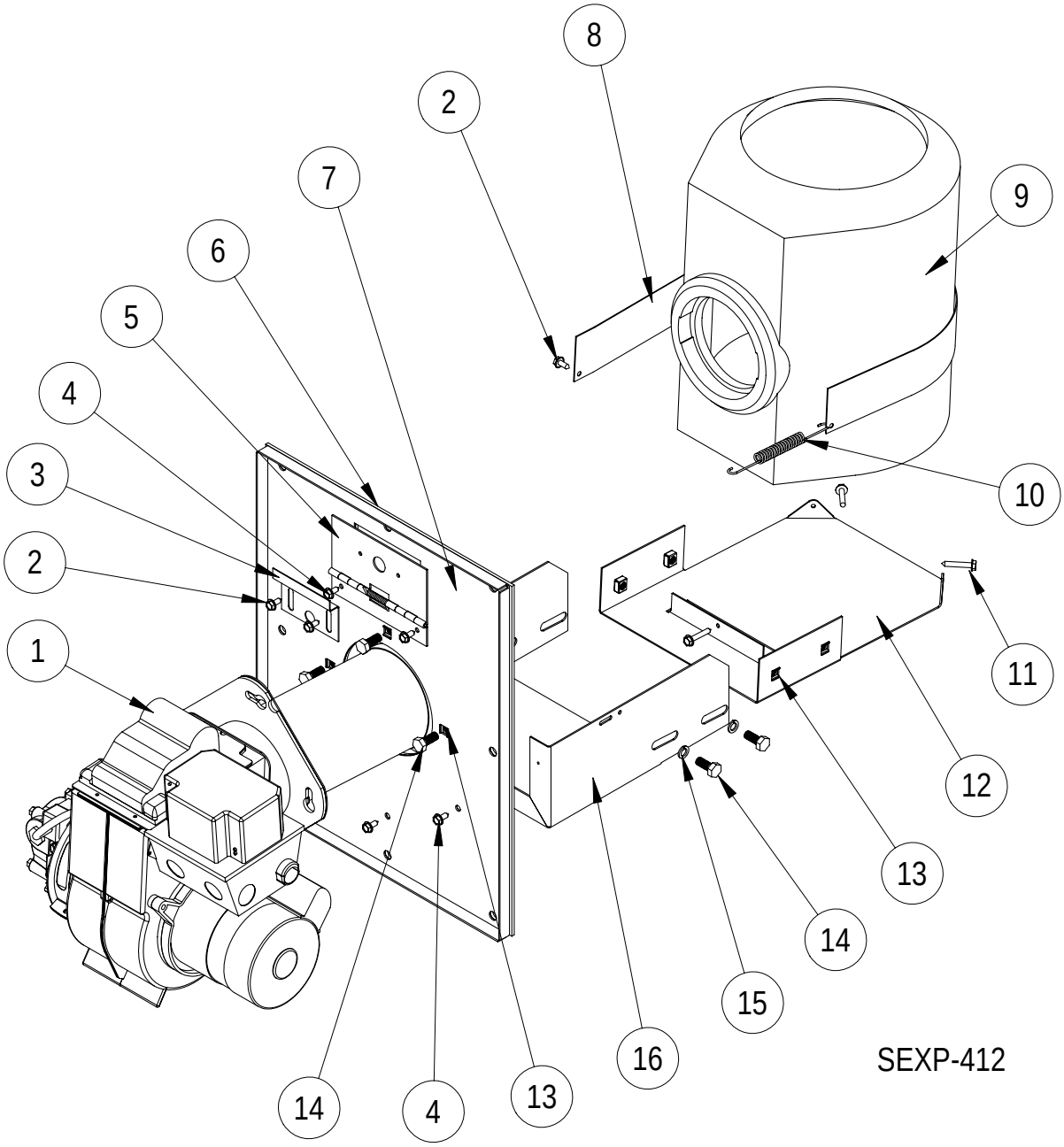

| Drawing No. | Part No. | Description | FH085D36F | FH110D48F | FH110D60F |
|---|---|---|---|---|---|
| 1 | 9020-034 | AFG Burner w/GeniSys Primary .75 GHP 70° H | X | | |
| 1 | 9020-039 | NX Burner w/GeniSys Primary .75 GHP 60° B | | X | X |
| 2 | 1012-153 | Screw Type AB #10 – 16x1/2" | 3 | 3 | 3 |
| 3 | 143-026 | Inspection Door Cover Plate | X | X | X |
| 4 | 1012-086 | Screw Type AB #10 – 16x1/2" w/nibs | 5 | 5 | 5 |
| 5 | 142-027 | Inspection Door Hinge | X | X | X |
| 6 | 1921-057 | Front Plate Gasket | X | X | X |
| 7 | S160-036 | Front Plate Assembly | X | X | X |
| 8 | 140-198 | Combustion Chamber Support | X | X | X |
| 9 | 7090-014 | Pyrolite Combustion Chamber | X | X | X |
| 10 | 5401-004 | Stainless Steel Spring | X | X | X |
| 11 | 1012-145 | Screw Type AB #10 – 16x1" | 3 | 3 | 3 |
| 12 | S140-292 | Bracket Extension | X | X | X |
| 13 | 1012-218 | 1/4 – 20 Cage Nut | 7 | 7 | 7 |
| 14 | 1012-051 | 1/4 – 20x 3/4 Hex Head Bolt | 7 | 7 | 7 |
| 15 | 1012-126 | 1/4" Type "A" Washer | 4 | 4 | 4 |
| 16 | 112-297 | Combustion Chamber Bracket | X | X | X |

# BURNER COMPONENTS

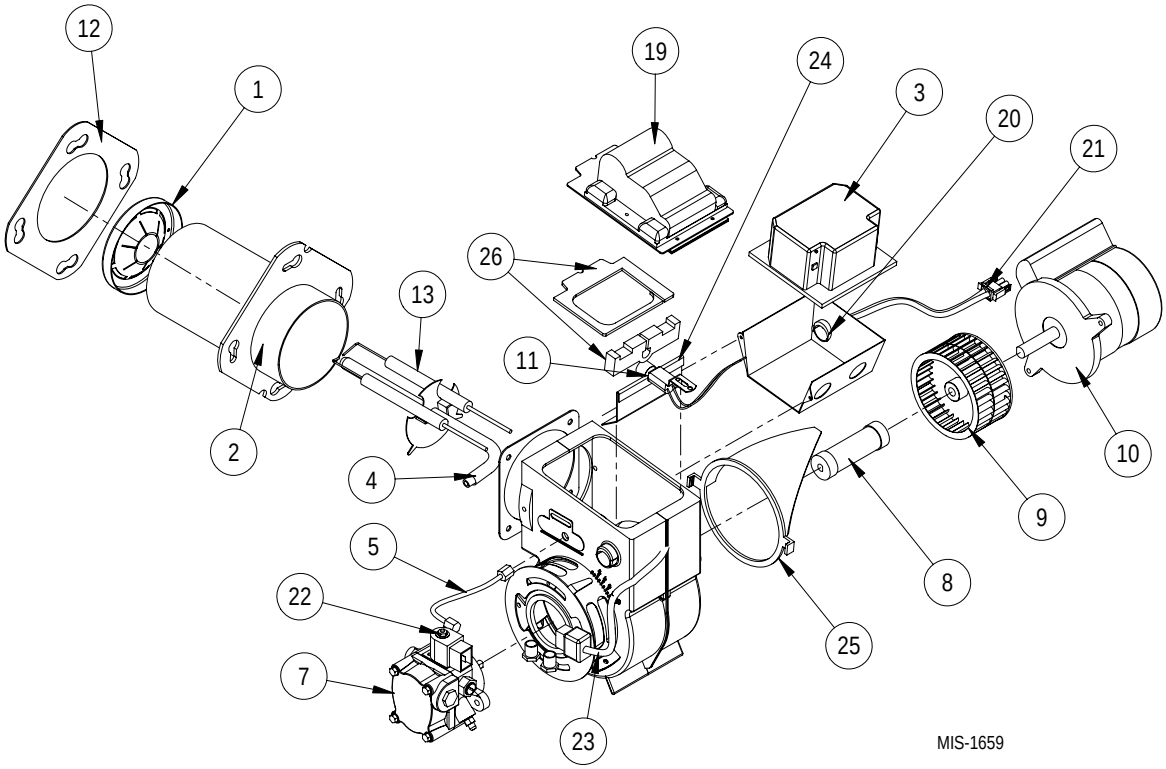


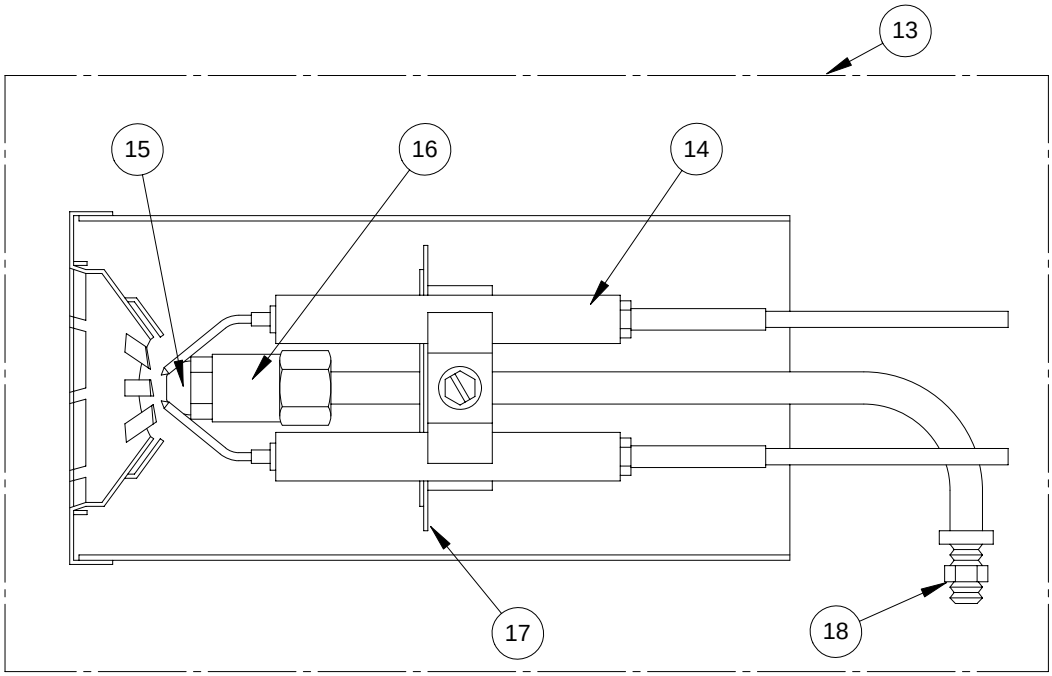


MIS-1663

| Drawing No. | Bard Part No. | Supplier Part No. | Description | FH085D36F | FH110D48F | FH110D60F |
|---|---|---|---|---|---|---|
| 1 | 9022-034 | 360004 | Head (F4) | X | | |
| 1 | 9022-042 | 360006 | Head (F6) | | X | X |
| 2 | 9022-004 | 51236007BK | Air Tube & Flange Assembly | X | X | X |
| 3 | 9022-080 | 7456U | Primary Control | X | X | X |
| 3 | 9022-095 * | 7505B | Primary Control (GeniSys) | X | X | X |
| 4 | 9022-007 | 571801 | Bulkhead Fitting | X | X | X |
| 5 | 9022-008 | 5636 | Connector Tube | X | X | X |
| 7 | 9022-082 | 21844U | "CleanCut" Oil Pump | X | X | X |
| 8 | 9022-011 | 2454 | Coupling | X | X | X |
| 9 | 9022-045 | 2999 | Blower Wheel | X | X | X |
| 10 | 9022-084 | 21805R/218 | PSC Motor 1/7 H.P. | X | X | X |
| 11 | 9022-085 | 7006Q | CAD Cell | X | X | X |
| 12 | 9022-021 | 3811 | Mounting Flange Gasket | X | X | X |
| 13 | 9022-014 | NL90YH | Nozzle Line Electrode Assembly | X | X | X |
| 14 | 9022-017 | 5780 | Electrode Insulator Assembly | X | X | X |
| 15 | 9011-016 | 2663 | Nozzle .75 GPH 70 Degree A | X | | |
| 15 | 9011-018 | 2711 | Nozzle 1.00 GPH 70 Degree A | | X | X |
| 16 | 9022-016 | 213U | Nozzle Adapter | X | X | X |
| 17 | 9022-023 | 3384 | Static Plate (3-3/8") | X | X | X |
| 18 | 9022-018 | 3666 | Bulkhead Fitting Locknut | X | X | X |
| 19 | 9022-079 | 7440 | Solid State Igniter | X | X | X |
| 20 | 9022-086 | 3741 | Junction Box | X | X | X |
| 21 | 9022-055 | 31838 | Power Cord | X | X | X |
| 22 | 9022-087 | 21755 | Solenoid Valve Coil | X | X | X |
| 23 | 9022-088 | 21807 | Solenoid Valve Cord | X | X | X |
| 24 | 9022-089 | 3708 | Restrictor Baffle | X | X | X |
| 25 | 9022-090 | 31231 | Air Guide | X | X | X |
| 26 | 9022-093 | 51304 | Igniter Gasket Kit | X | X | X |

**** Alternate Control supplied in some 2008 & newer models. The 9022-095 Control replaces the 9022-080 Control in all models.***