REPLACEMENT PARTS MANUAL

OIL FIRED FURNACE

Models: FH085D36F
FH110D48F
FH110D60F

General Notes

- Revised and/or additional pages may be issued from time to time.
- A complete and current manual consists of pages shown in the following contents section.

Important

- Contact the installing and/or local Bard distributor for all parts requirements. Make sure you have the complete model and serial number available from the unit rating plate.

Contents

Description	Page
Cabinet and Functional Components	
◆ Exploded View	2
◆ Usage List	3
◆ Usage List	4
◆ Blank Page	5
Control Panel	
◆ Layout View	6
◆ Usage List	7
Blower Housing	
◆ Exploded View	8
◆ Usage List	9
Burner Assembly	
◆ Exploded View	10
◆ Usage List	11
Burner Components	
◆ Exploded View	12
◆ Usage List	13
◆ Exploded View	14
◆ Usage List	15

CLIMATE CONTROL SOLUTIONS

Bard Manufacturing Company, Inc.
Bryan, Ohio 43506

Since 1914...Moving ahead, just as planned.

Manual: 2110-925I
Supersedes: 2110-925H
File: Tab 3
Date: 04-21-11

CABINET AND FUNCTIONAL COMPONENTS

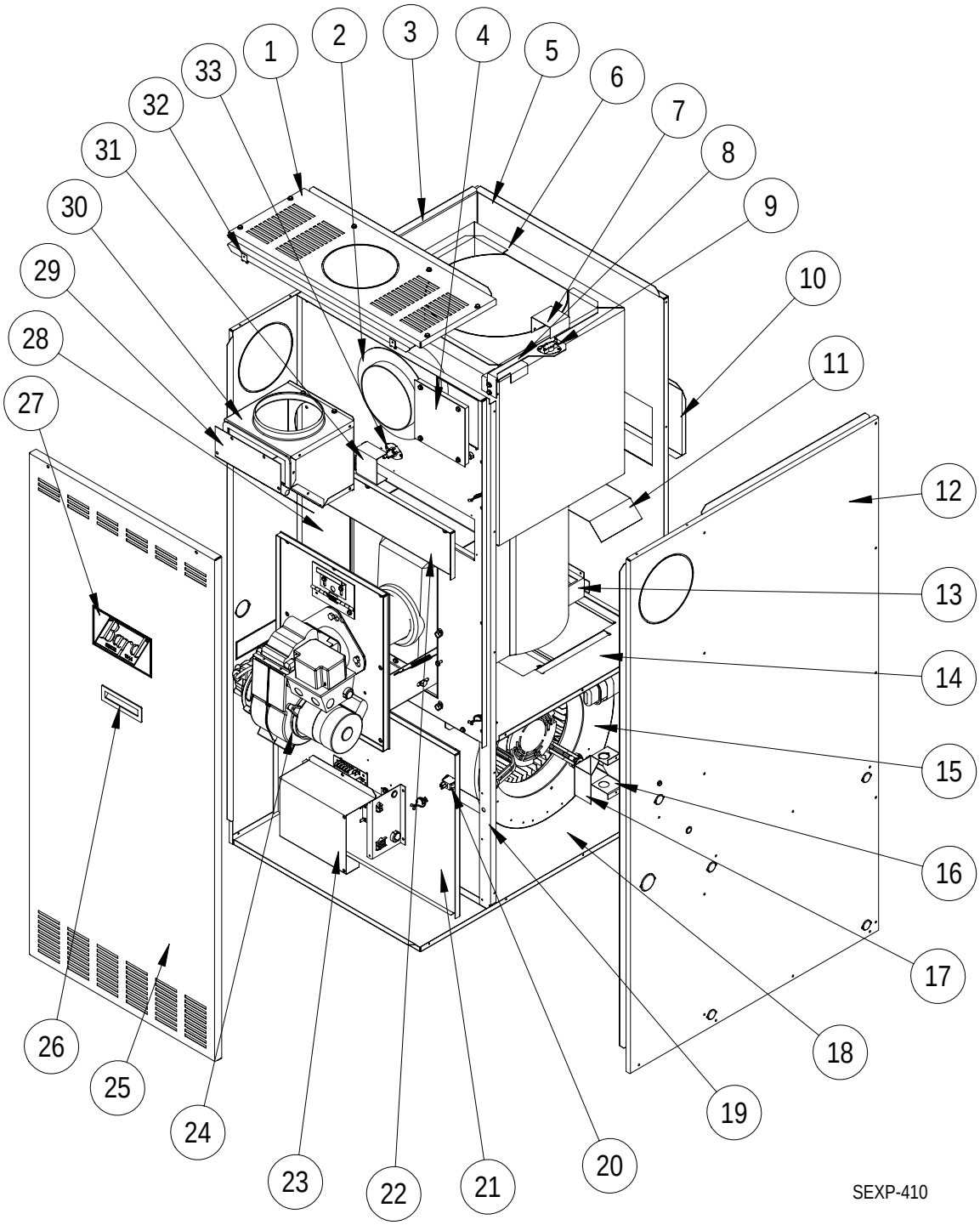

Drawing No.	Part No.	Description	FH085D36F	FH110D48F	FH110D60F
1	S107-231-4	Top Fill	X	X	X
2	1921-037	Smoke Pipe Gasket	X	X	X
3	S101-408-4	Left Side	X		
3	S101-410-4	Left Side		X	X
4	S142-089	Limit Access Door	X	X	X
5	S109-169-4	Back	X		
5	S109-170-4	Back		X	X
6	S171-267	Heat Exchanger	X		
6	S171-268	Heat Exchanger		X	X
7	143-091	Limit Cover	X	X	X
8	112-312	Limit Bracket	X	X	X
9	8402-142	Primary Limit L145	X		
9	8402-144	Primary Limit L150		X	
9	8402-175	Primary Limit L140			X
10	S143-088-4	Rear Clean Out Cover	X	X	X
11	134-109	Air Deflector	X		
11	134-205	Air Deflector		X	X
12	S101-407-4	Right Side	X		
12	S101-409-4	Right Side		X	X
13	140-315	Rear Heat Exchanger Leg	X		
13	140-316	Rear Heat Exchanger Leg		X	X
14	126-327	Blower Base	X		
14	127-329	Blower Base		X	X
15	S900-259	Blower Assembly	X		
15	S900-260	Blower Assembly		X	
15	S900-261	Blower Assembly			X
16	117-251	Junction Box	X	X	X
17	133-178	Junction Box Cover	X	X	X
18	S127-328	Lower Base	X	X	X
19	105-1133	Side Angle	2	2	2
20	8406-076	Door Switch SPST 16 Amp N.O.	X	X	X

Table Continued on Page 4

Table Continued from Page 3

Drawing No.	Part No.	Description	FH085D36F	FH110D48F	FH110D60F
21	S153-351	Blower Door	X		
21	S153-353	Blower Door		X	X
22	S143-090	Clean Out Cover	X	X	X
23	132-177	Control Cover	X	X	X
24	Burner Assy.	See Burner Assembly Parts List (Pages 10 & 11)	X	X	X
25	S153-350-4	Vestibule Door	X		
25	S153-352-4	Vestibule Door		X	X
26	1171-025	Plastic Door Pull	X	X	X
27	5252-010	Bard Nameplate	X	X	X
28	S120-361	Heat Exchanger Partition	X		
28	S120-362	Heat Exchanger Partition		X	X
29	169-152	Flue Box Door	X	X	X
30	S169-150	Flue Box Assembly	X	X	X
31	143-094	Partition Limit Cover	X	X	X
32	1012-314	#10 - 18 U-Clips	2	2	2
33	8402-147	Backup Limit L190	X	X	X

This page intentionally left blank

CONTROL PANEL

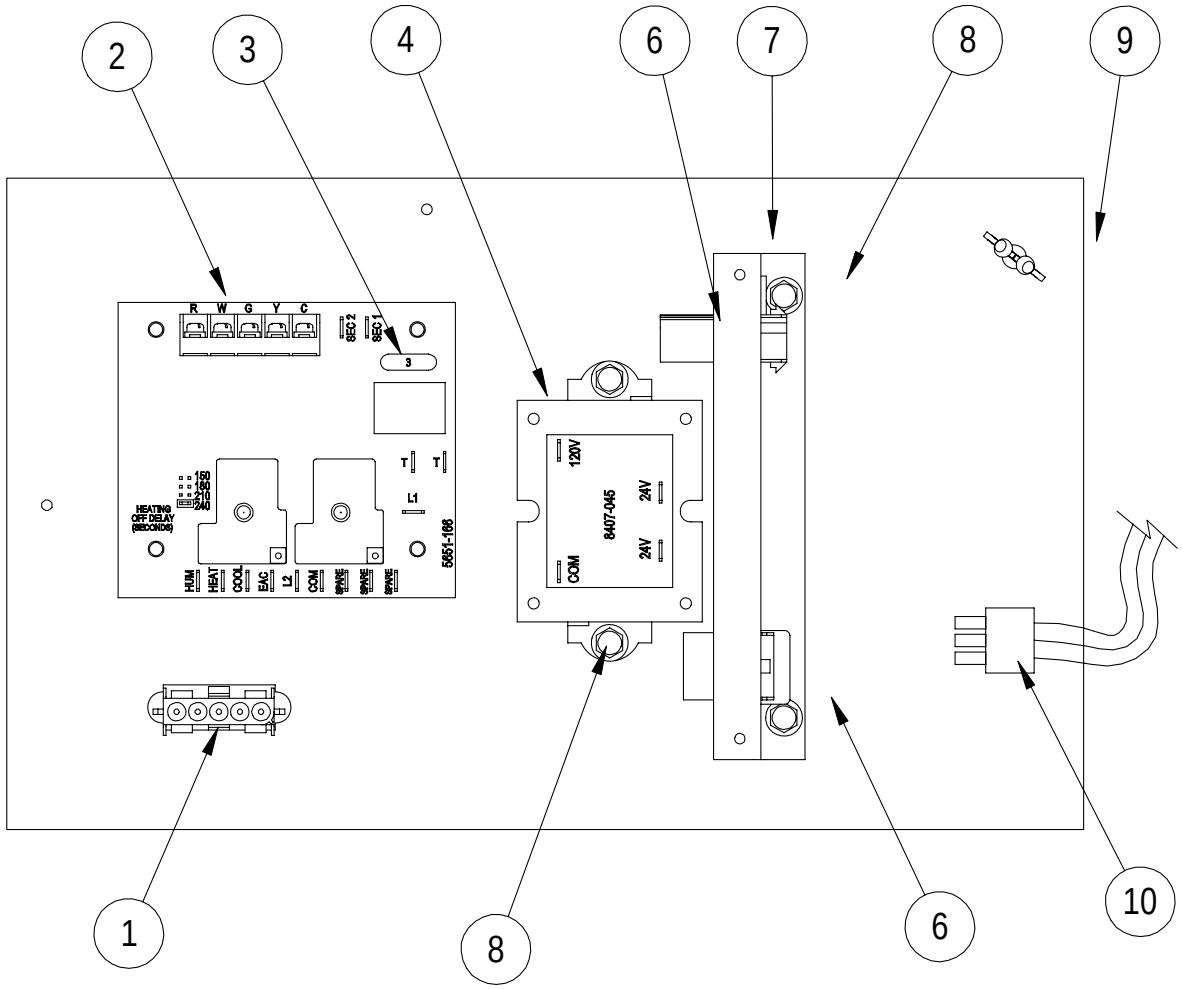

SEXP-413 A

Drawing No.	Part No.	Description	FH085D36F	FH110D48F	FH110D60F
1	3000-1177	Wire Assembly	X	X	X
2	5651-166	Oil Furnace Blower Control	X	X	X
3	8614-045	3 Amp Fuse	X	X	X
4	8407-045	Transformer 120/24V 40 VA	X	X	X
5	1012-153	Screw Type AB #10 – 16x1/2	X	X	X
6	3000-1176	Wire Assembly (Inside Control Panel)	X	X	X
7	113-296	Plug Bracket	X	X	X
8	1012-086	Screw Type AB #10 – 16x1/2 w/nibs	X	X	X
9	7950-027	Purse Lock Wire Tie	X	X	X
10	3000-1175	Wire Assembly (Outside Control Panel)	X	X	X

BLOWER ASSEMBLY

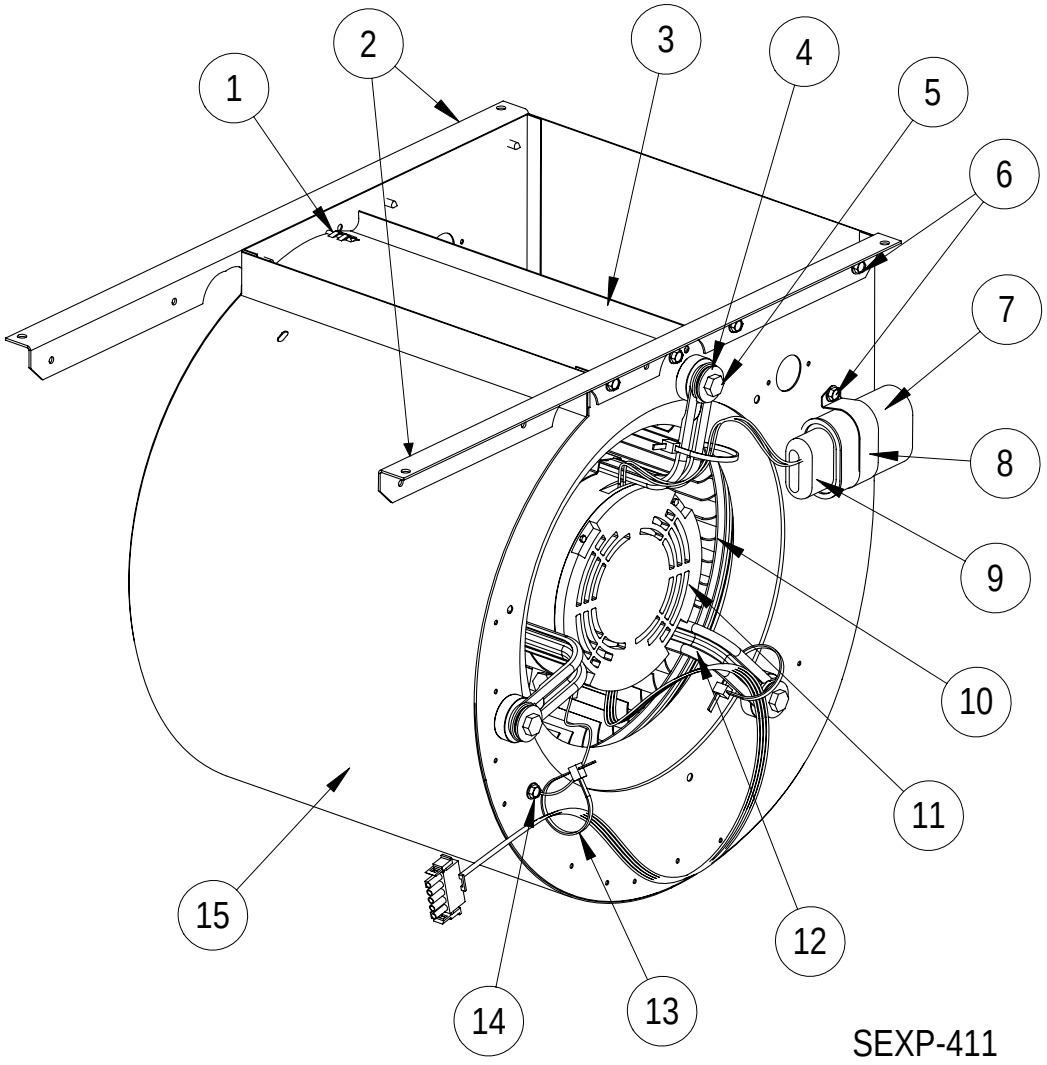

Drawing No.	Part No.	Description	S900-259	S900-260	S900-261
1	1012-088	Screw Type AB #10 – 16x3/4	2	2	①
2	104-1134	Blower Angle	2		2
2	104-1137	Blower Angle		2	
3	144-128	Diffuser	X		
3	144-129	Diffuser		X	①
4	1012-109	Washer	3	3	3
5	1012-076	1/4 – 20x1-1/4 Type I Bolt	3	3	3
6	1012-086	Screw Type AB #10 – 16x1/2 w/nibs	10	10	10
7	8552-002	Capacitor 5.0 MFD 370V	X		
7	8552-004	Capacitor 7.5 MFD 370V		X	
7	8552-026	Capacitor 15.0 MFD 370V			X
8	8550-003	Capacitor Bracket	X	X	
8	8550-006	Capacitor Bracket			X
9	8611-002	Capacitor Boot	X	X	X
10	5152-014	Blower Wheel CW 1/2" 10-9DD	X		
10	5152-059	Blower Wheel CCW 1/2" 10-10DD		X	
10	5152-053	Blower Wheel CW 1/2" 11-10DD			X
11	8105-040	Motor 1/3 HP 115V CCW 1075 3 Speed	X		
11	8106-033	Motor 1/2 HP 115V CW 1075 4 Speed		X	
11	8107-007	Motor 3/4 HP 115V CCW 1075 4 Speed			X
12	8620-034	Motor Mount Kit	X	X	X
13	7950-009	Wire Tie	X	X	X
14	1012-153	Screw Type AB #10 – 16x1/2	X	X	X
15	151-073	Blower Housing	X		
15	151-082	Blower Housing		X	
15	①	Blower Housing			①

① Part #5152-050 includes housing, diffuser and blower wheel part #5152-053.

BURNER ASSEMBLY

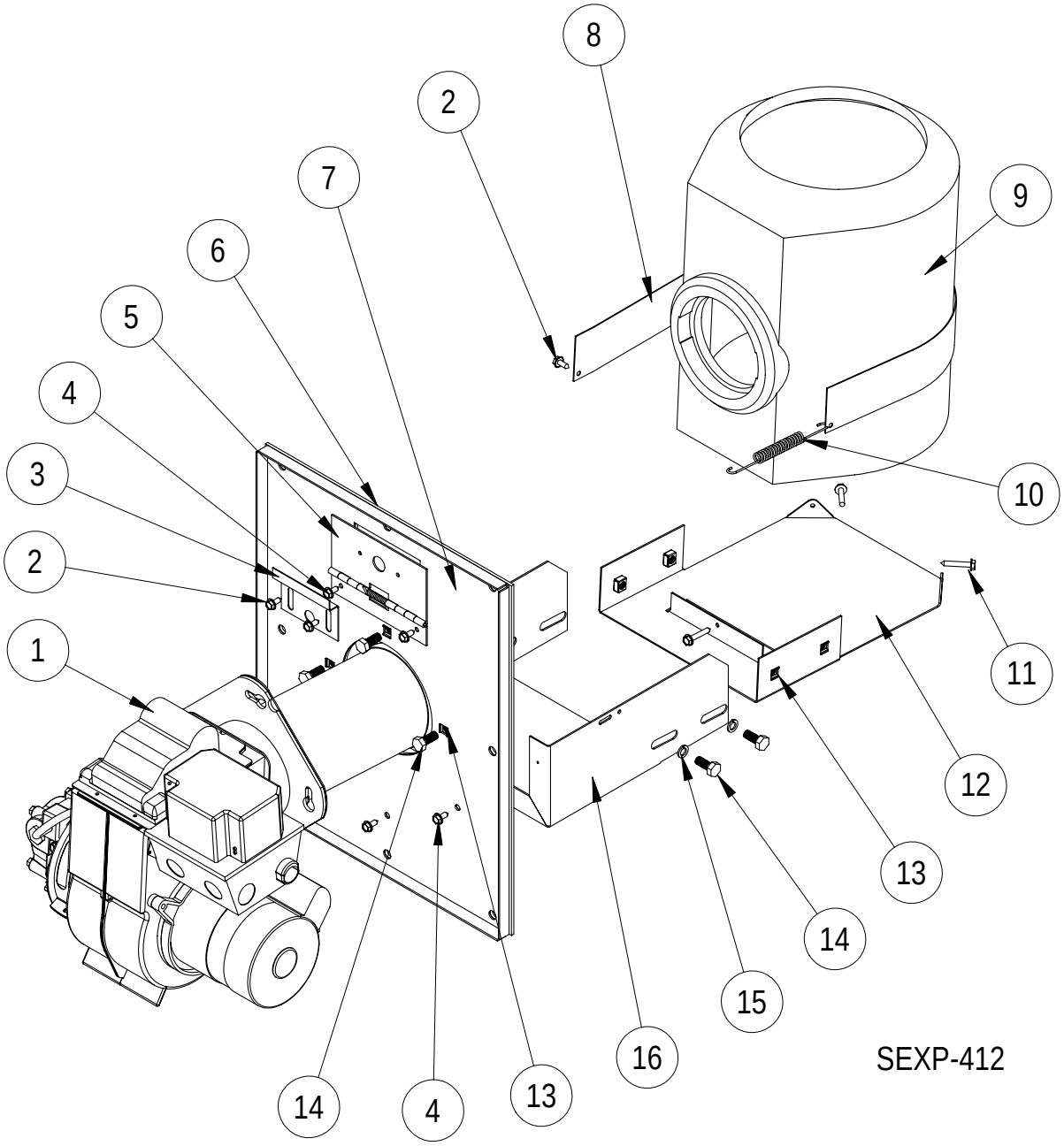

Drawing No.	Part No.	Description	FH085D36F	FH110D48F	FH110D60F
1	9020-034	AFG Burner w/GeniSys Primary .75 GPH 70° H	X		
1	9020-039	NX Burner w/GeniSys Primary .85 GPH 60° B		X	X
2	1012-153	Screw Type AB #10 – 16x1/2"	3	3	3
3	143-026	Inspection Door Cover Plate	X	X	X
4	1012-086	Screw Type AB #10 – 16x1/2" w/nibs	5	5	5
5	142-027	Inspection Door Hinge	X	X	X
6	1921-057	Front Plate Gasket	X	X	X
7	S160-036	Front Plate Assembly	X	X	X
8	140-198	Combustion Chamber Support	X	X	X
9	7090-014	Pyrolite Combustion Chamber	X	X	X
10	5401-004	Stainless Steel Spring	X	X	X
11	1012-145	Screw Type AB #10 – 16x1"	3	3	3
12	S140-292	Bracket Extension	X	X	X
13	1012-218	1/4 – 20 Cage Nut	7	7	7
14	1012-051	1/4 – 20x 3/4 Hex Head Bolt	7	7	7
15	1012-126	1/4" Type "A" Washer	4	4	4
16	112-297	Combustion Chamber Bracket	X	X	X

BURNER COMPONENTS

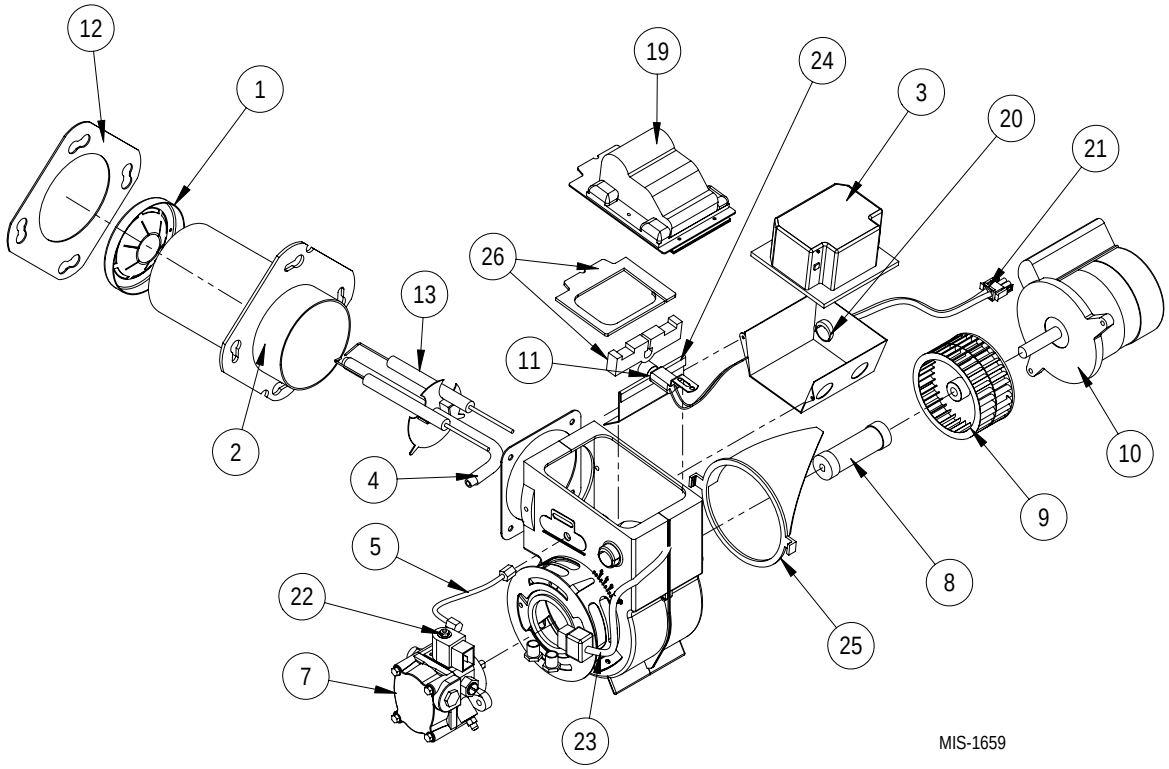

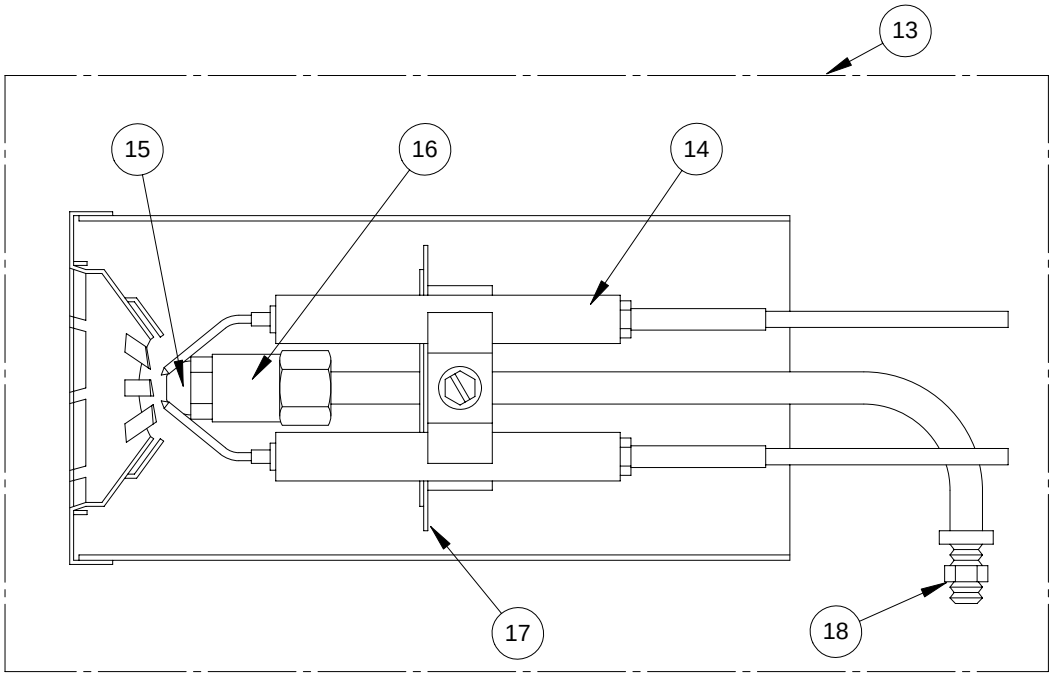

MIS-1663

Drawing No.	Bard Part No.	Supplier Part No.	Description	FH085D36F
1	9022-034	360004	Head (F4)	X
2	9022-004	51236007BK	Air Tube & Flange Assembly	X
3	9022-095	7505B	Primary Control (GeniSys)	X
4	9022-007	571801	Bulkhead Fitting	X
5	9022-008	5636	Connector Tube	X
7	9022-082	21844U	"CleanCut" Oil Pump	X
8	9022-011	2454	Coupling	X
9	9022-045	2999U	Blower Wheel	X
10	9022-084	21805R/218	PSC Motor 1/7 H.P.	X
11	9022-085	7006Q	CAD Cell	X
12	9022-021	3811	Mounting Flange Gasket	X
13	9022-014	NL90YH	Nozzle Line Electrode Assembly	X
14	9022-017	5780	Electrode Insulator Assembly	X
15	9011-016	2663	Nozzle .75 GPH 70° Hollow	X
16	9022-016	213U	Nozzle Adapter	X
17	9022-023	3384	Static Plate (3-3/8")	X
18	9022-018	3666	Bulkhead Fitting Locknut	X
19	9022-079	7440	Solid State Igniter	X
20	9022-086	3741	Junction Box	X
21	9022-055	31838	Power Cord	X
22	9022-087	21755	Solenoid Valve Coil	X
23	9022-088	21807	Solenoid Valve Cord	X
24	9022-089	3708	Restrictor Baffle	X
25	9022-090	31231	Air Guide	X
26	9022-093	51304	Igniter Gasket Kit	X

BURNER COMPONENTS

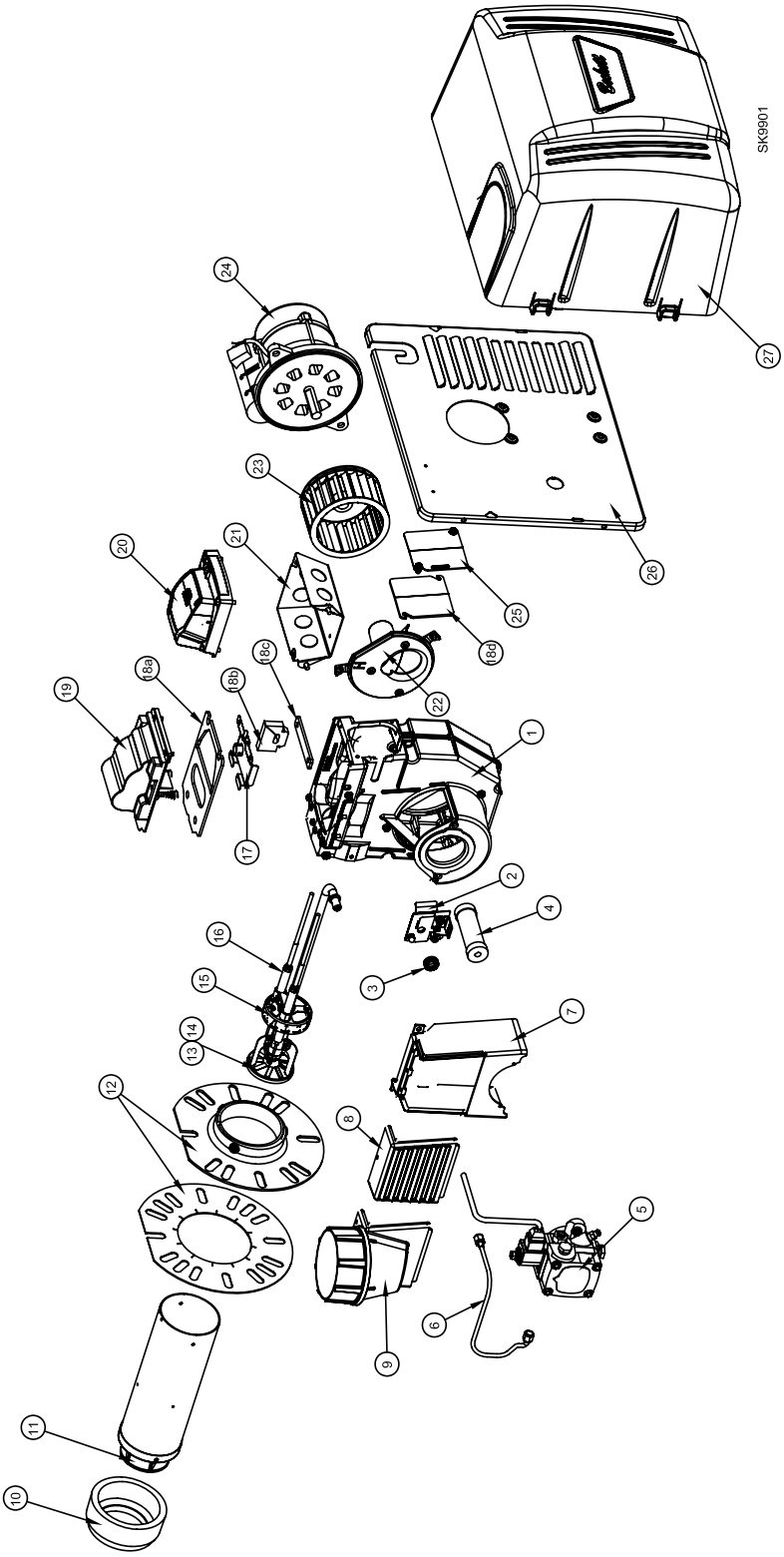

Drawing No.	Bard Part #	Supplier Part #	Description	FH110D48F	FH110D60F
1	N/A	51783GY	Housing	X	X
2	N/A	52000U	Head/Air Adjustment Mechanism Assy.	X	X
3	9022-018	3666	Splined Nut	X	X
4	9022-011	2454	Coupling	X	X
5	9022-082	21844U	"CleanCut" Oil Pump (Includes Mounting Screws)	X	X
6	N/A	51127	Connector Tube Assembly, 11"	X	X
7	N/A	1010U	Inlet Air Box	X	X
8	N/A	1013U	Inlet Air Louvers	X	X
9	N/A	1014U	Inlet Air Adaptor/Outside Air Kit	X	X
10	9022-096	32246	Heat Shield	X	X
11	N/A	N/A	Air Tube Combination	X	X
12	9022-097	NX84LBHS	Air Tube Combination Including Screws	X	X
13	N/A	N/A	Retention Head Assembly (6-Slot)	X	X
14	9022-098	51815U	Retention Head Assembly (9-Slot)	X	X
15	9022-099	7440B	Nozzle, Line Electrode, Head Assy., with Window	X	X
16	9022-100	51811U	Electrode Insulator Kit	X	X
17	N/A	32058U	Spring, Igniter Prop	X	X
18	N/A	51942U	Gasket Igniter Kit: Gasket, Igniter Baseplate Gasket, Wiring Hinge Gasket, Igniter Baseplate Hinge Gasket, Rear Access Door	X	X
19	9022-079	51771U	Igniter, Electronic	X	X
20	9022-095	7505B1500	Genisys Ignition Logic Control	X	X
21	9022-058	5770	Electrical Box	X	X
22	N/A	101101U	Air Guide	X	X
23	9022-045	2999U	Blower Wheel	X	X
24	9022-084	21805R/218	PSC Motor 1/7 H.P.	X	X
25	N/A	32119U	Door, Rear Access	X	X
26	N/A	N/A	Mounting Plate, Burner Cover	X	X
27	N/A	N/A	Cover, Burner	X	X
NS	N/A	51801U	Universal Adjust. Flange Kit, incl. 32086 Gasket	X	X
NS	9022-088	21807	Cordset Non-Delay 17"	X	X
NS	9022-054	7006U	CAD Cell Assembly	X	X
NS	9011-022	N/A	Nozzle 0.85X60° Solid (Factory Ship)	X	X
NS	9011-023	N/A	Nozzle 0.75X60° Solid (Factory Approved Re-Date)	X	X